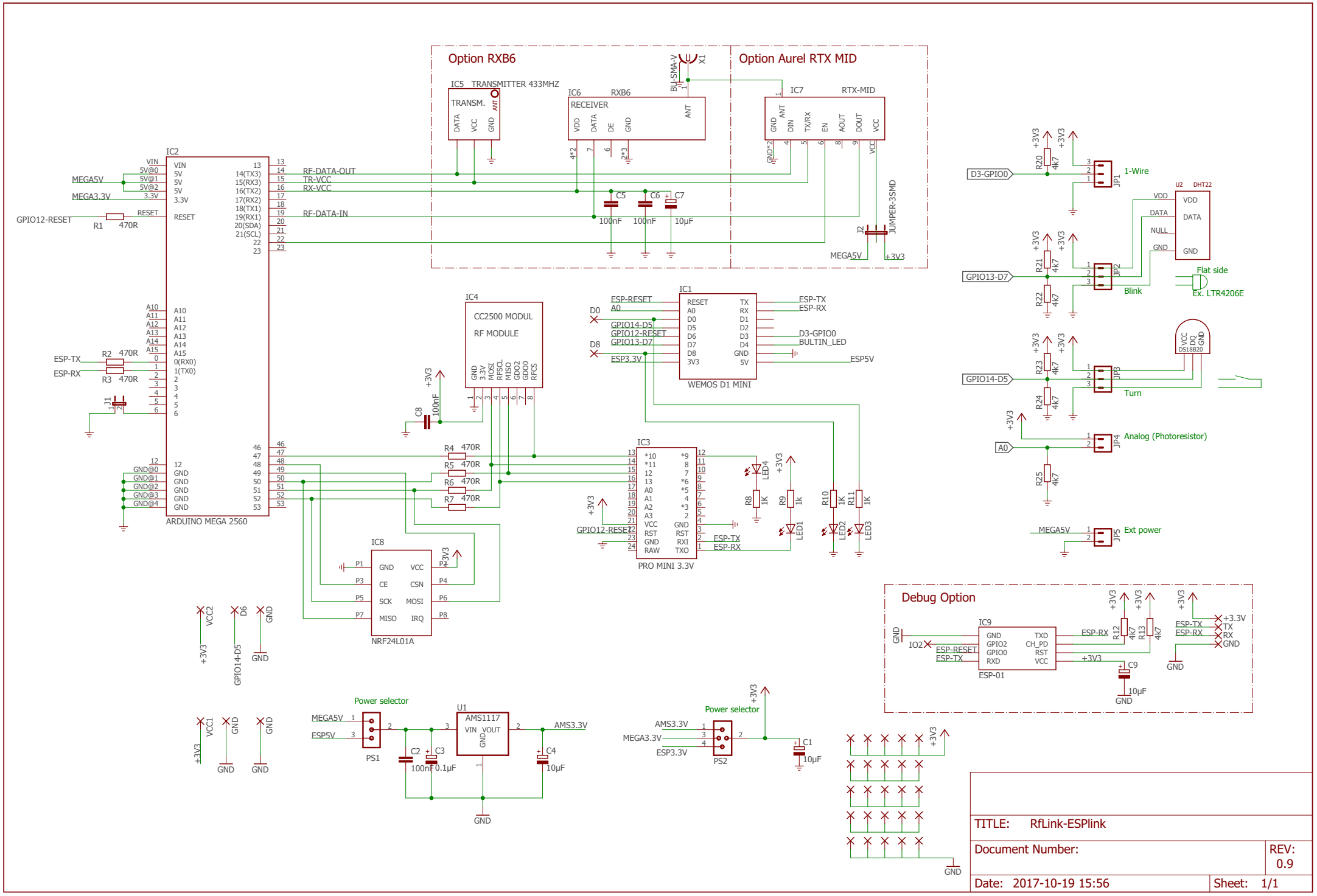
Option RXB6
Option Aurel RTX MID
IC5 TRANSMITTER 433MHZ
TRANSM.
DATA VCC GND ANT
IC6 RXB6
RECEIVER
VDD DATA DE GND ANT
BU-SMA-V X1
IC7 RTX-MID
GND ANT DIN TX/RX EN AOUT DOUT VCC
RF-DATA-OUT
TR-VCC
RX-VCC
RF-DATA-IN
C5 100nF
C6 100nF
C7 10µF
J2 JUMPER-3SMD
MEGA5V
+3V3
IC2
ARDUINO MEGA 2560
MEGA5V
MEGA3.3V
GPIO12-RESET
R1 470R
ESP-TX
ESP-RX
R2 470R
R3 470R
J1
IC4
CC2500 MODUL
RF MODULE
GND 3.3V MOSI RFSCL MISO GDO2 GDO0 RFCS
C8 100nF
R4 470R
R5 470R
R6 470R
R7 470R
IC1
WEMOS D1 MINI
RESET A0 D0 D5 D6 D7 D8 3V3
TX RX D1 D2 D3 D4 GND 5V
ESP-RESET
A0
GPIO14-D5
GPIO12-RESET
GPIO13-D7
ESP3.3V
ESP-TX
ESP-RX
D3-GPIO0
BULTIN_LED
ESP5V
IC3
PRO MINI 3.3V
GPIO12-RESET
ESP-TX
ESP-RX
LED4 LED1 LED2 LED3
R8 1K
R9 1k
R10 1K
R11 1K
IC8
NRF24L01A
GND VCC CE CSN SCK MOSI MISO IRQ
VCC2 D6 GND
GPIO14-D5
Power selector
PS1
MEGA5V
ESP5V
U1
AMS1117
VIN VOUT GND
C2 100nF
C3 0.1µF
C4 10µF
AMS3.3V
VCC1
PS2
MEGA3.3V
ESP3.3V
C1 10µF
D3-GPIO0
JP1 1-Wire
R20 4k7
U2 DHT22
VDD DATA NULL GND
GPIO13-D7
JP2 Blink
R21 4k7
R22 4k7
Flat side
Ex. LTR4206E
DS18B20
GPIO14-D5
JP3 Turn
R23 4k7
R24 4k7
A0
JP4 Analog (Photoresistor)
R25 4k7
MEGA5V
JP5 Ext power
Debug Option
IC9
ESP-01
GND IO2 ESP-RESET ESP-TX
GND GPIO2 GPIO0 RXD
TXD CH_PD RST VCC
ESP-RX
+3V3
R12 4k7
R13 4k7
C9 10µF
ESP-TX
ESP-RX
+3.3V TX RX GND
TITLE: RfLink-ESPlink
Document Number:
REV: 0.9
Date: 2017-10-19 15:56
Sheet: 1/1