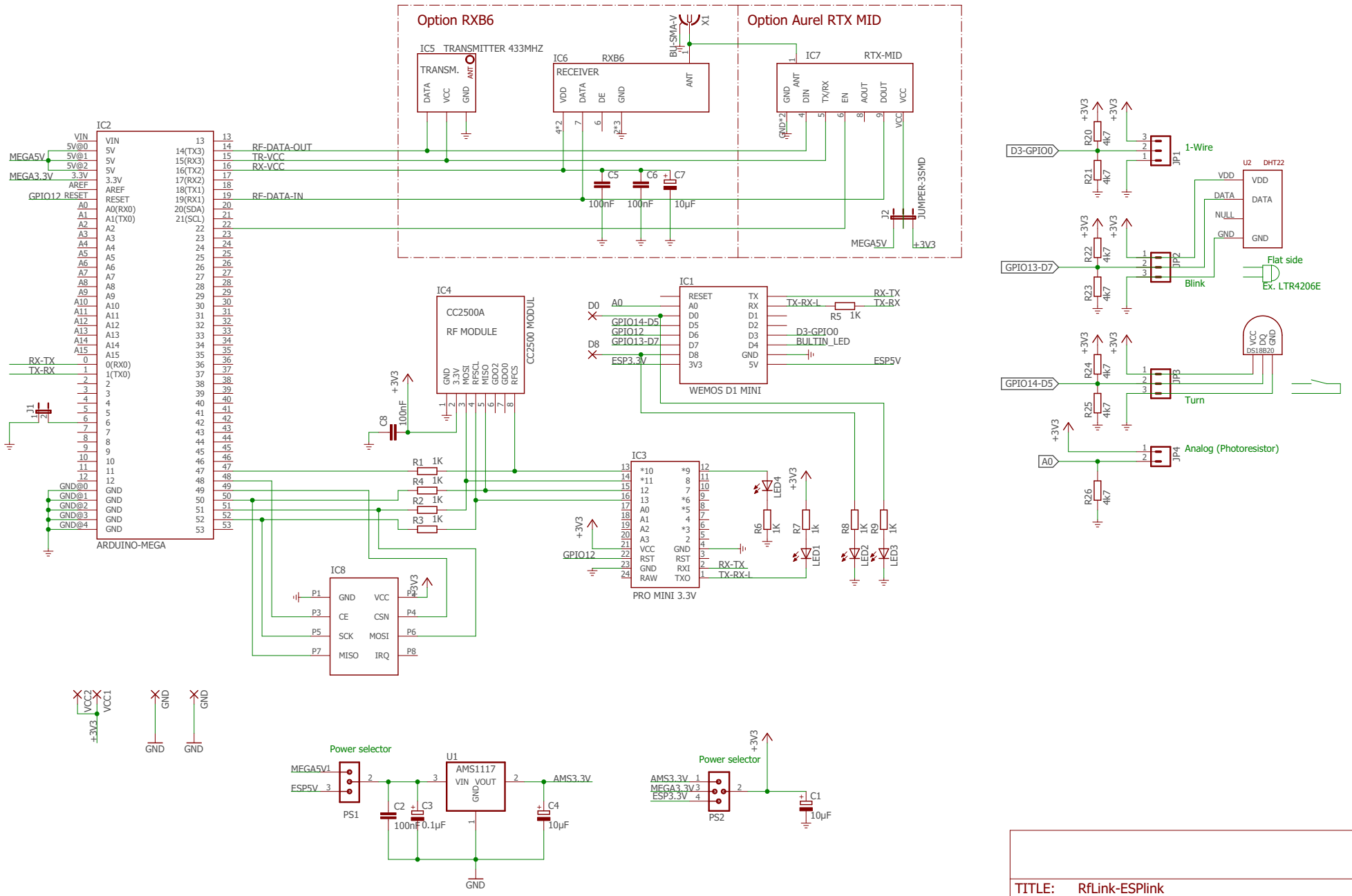

TITLE:	RfLink-ESPlink
Document Number:	REV:
Date: 2017-10-02 21:56	Sheet: 1/1

2017-10-02 22:12 f=0.73 C:\Users\Henrik\Dropbox\Arduino\Eagle\RFLink\RfLink-ESPlink.sch (Sheet: 1/1)