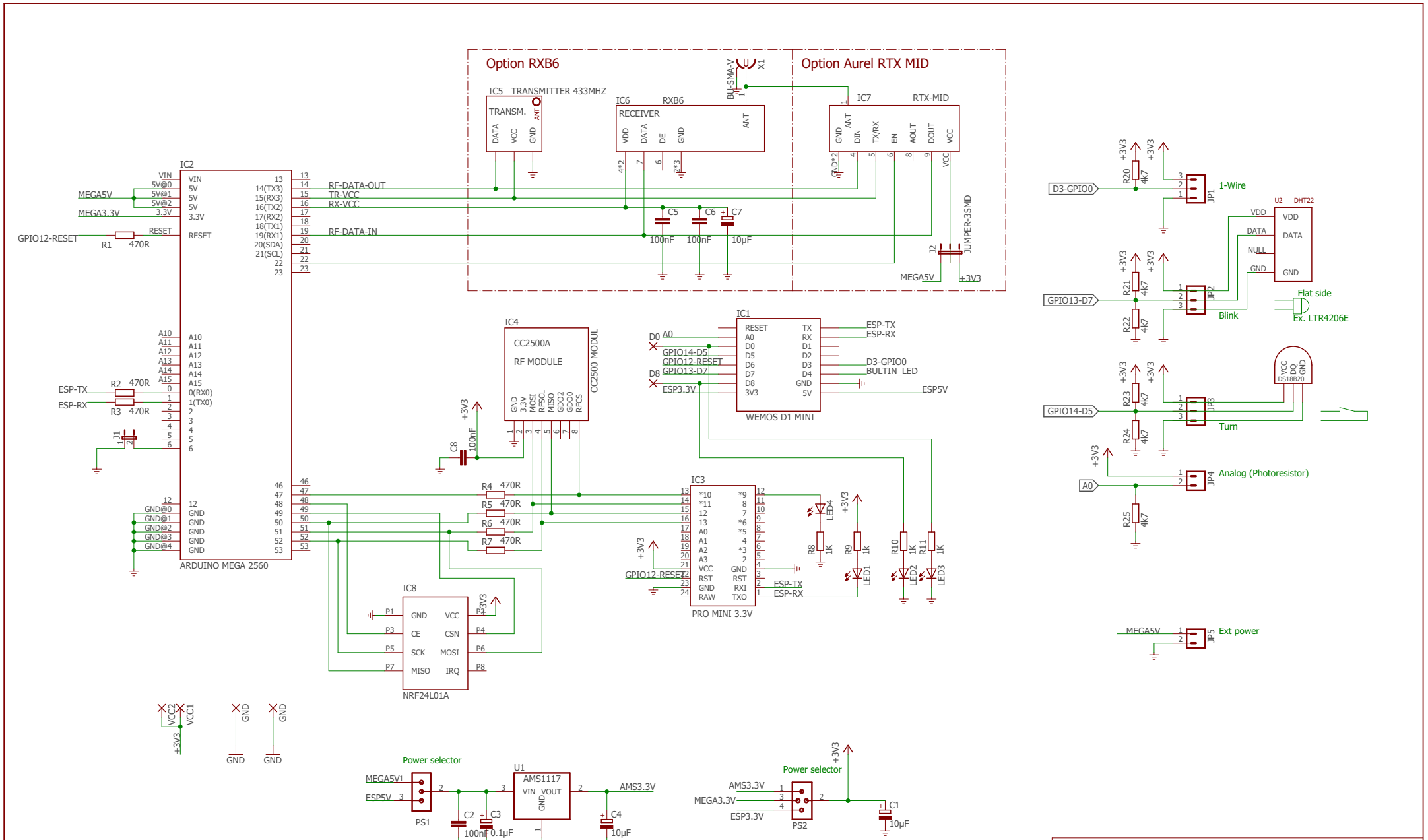

TITLE: RfLink-ESPlink	
Document Number:	REV: 0.81
Date: 2017-10-06 21:03	Sheet: 1/1