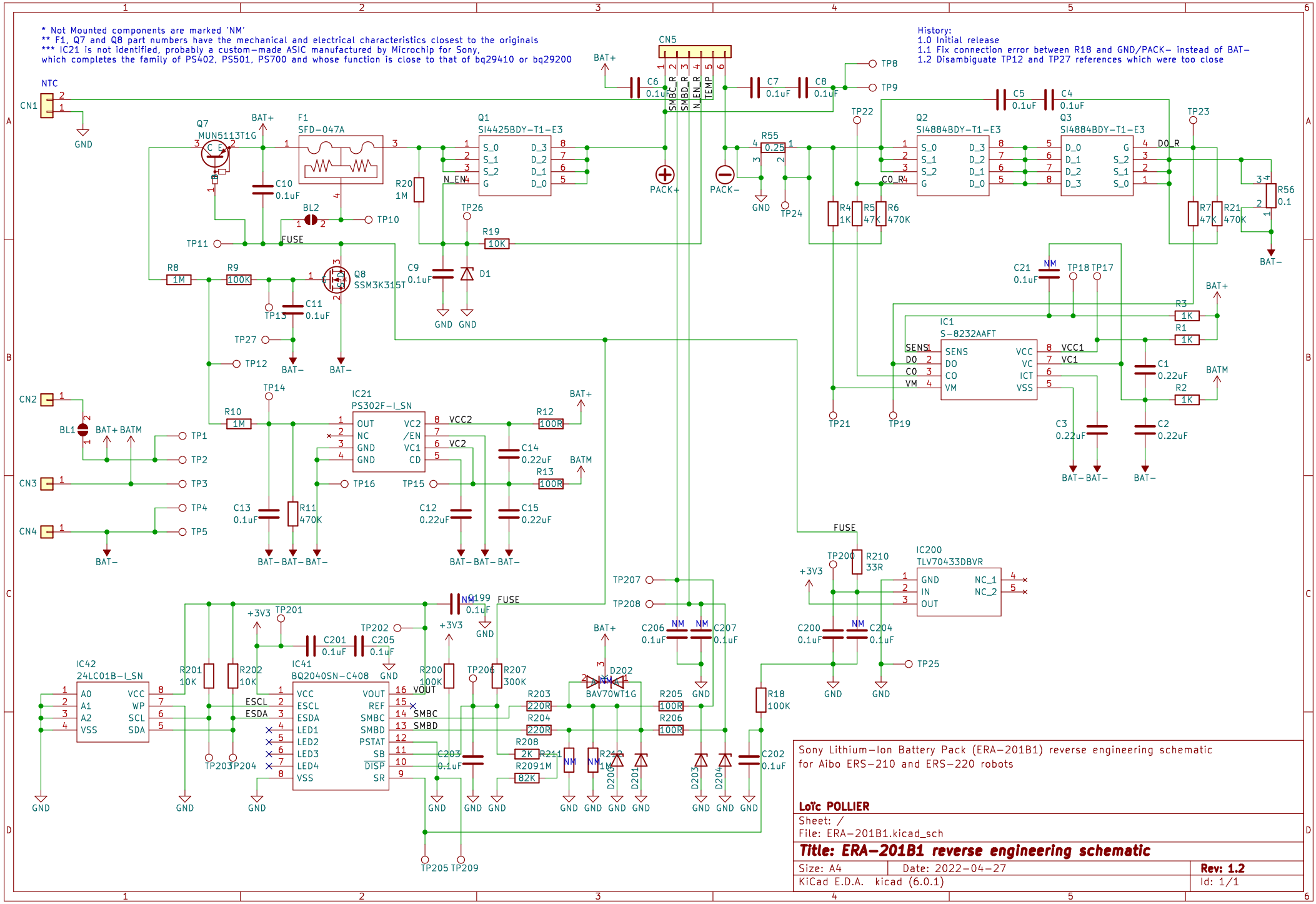
* Not Mounted components are marked 'NM'
** F1, Q7 and Q8 part numbers have the mechanical and electrical characteristics closest to the originals
*** IC21 is not identified, probably a custom-made ASIC manufactured by Microchip for Sony,
which completes the family of PS402, PS501, PS700 and whose function is close to that of bq29410 or bq29200
History:
1.0 Initial release
1.1 Fix connection error between R18 and GND/PACK- instead of BAT-
1.2 Disambiguate TP12 and TP27 references which were too close
CN5
SMBC_R
SMBD_R
N_EN_R
TEMP
Q1
SI4425BDY-T1-E3
Q2
SI4884BDY-T1-E3
Q3
SI4884BDY-T1-E3
Q7
MUN5113T1G
F1
SFD-047A
Q8
SSM3K315T
IC1
S-8232AAFT
IC21
PS302F-I_SN
IC42
24LC01B-I_SN
IC41
BQ2040SN-C408
IC200
TLV70433DBVR
D202
BAV70WT1G
PACK+
PACK-
BAT+
BAT-
BATM
GND
FUSE
+3V3
VCC2
VCC1
VOUT
SMBC
SMBD
ESCL
ESDA
N_EN
DO_R
CO_R
NTC
Sony Lithium-Ion Battery Pack (ERA-201B1) reverse engineering schematic
for Aibo ERS-210 and ERS-220 robots
Loïc POLLIER
Sheet: /
File: ERA-201B1.kicad_sch
Title: ERA-201B1 reverse engineering schematic
Size: A4
Date: 2022-04-27
Rev: 1.2
KiCad E.D.A. kicad (6.0.1)
Id: 1/1