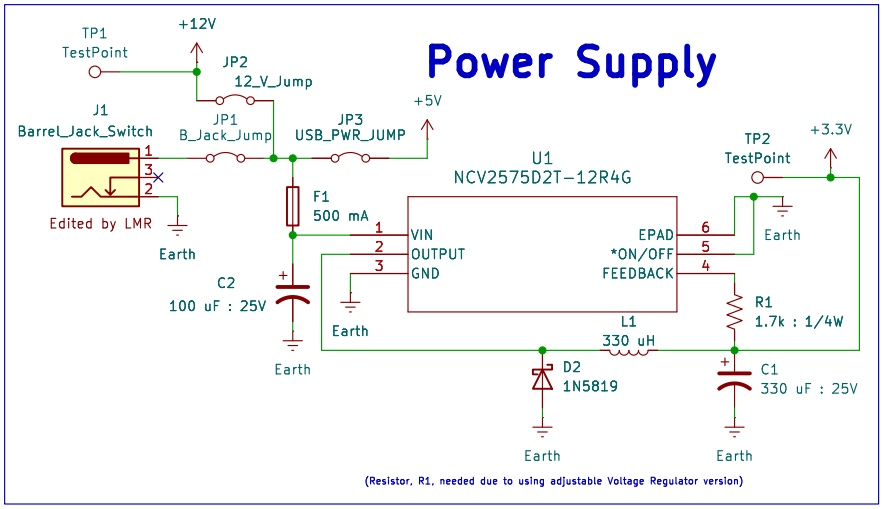

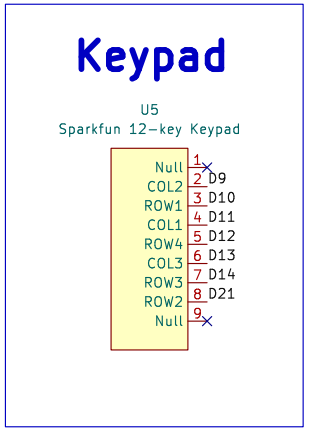

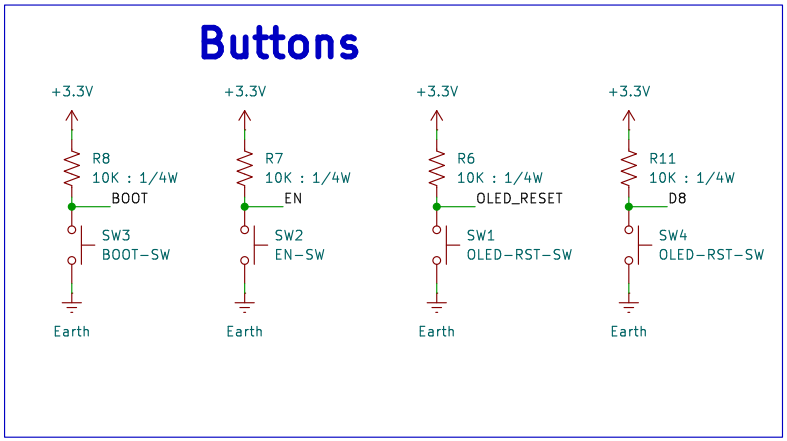

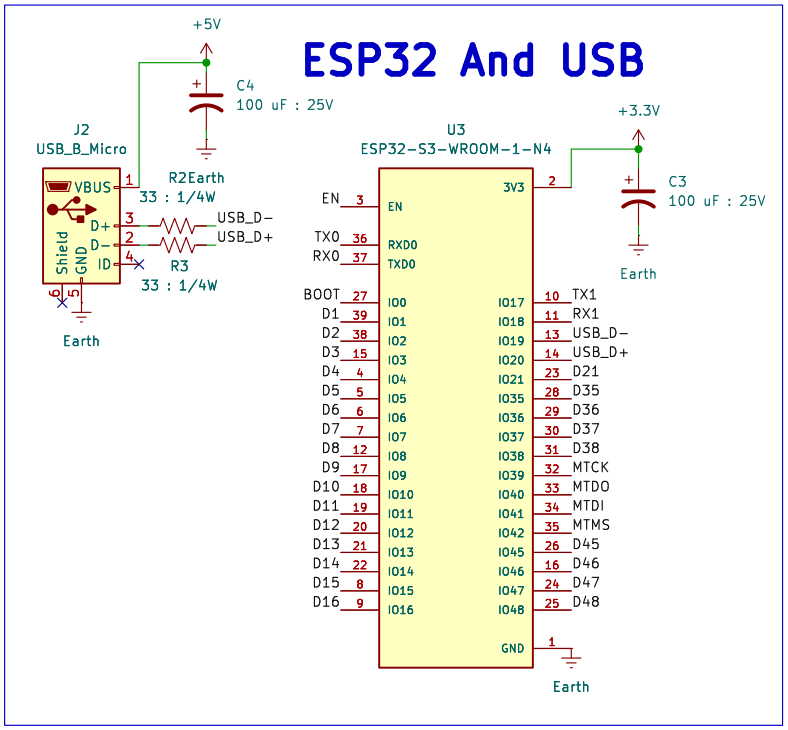

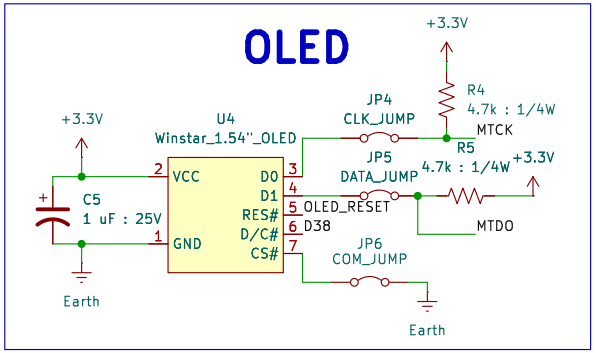

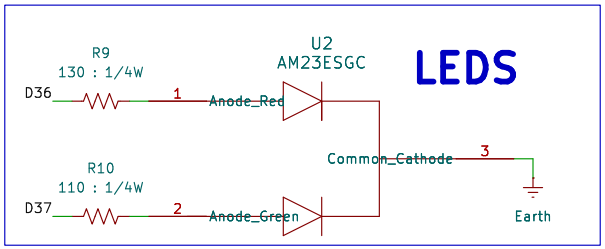

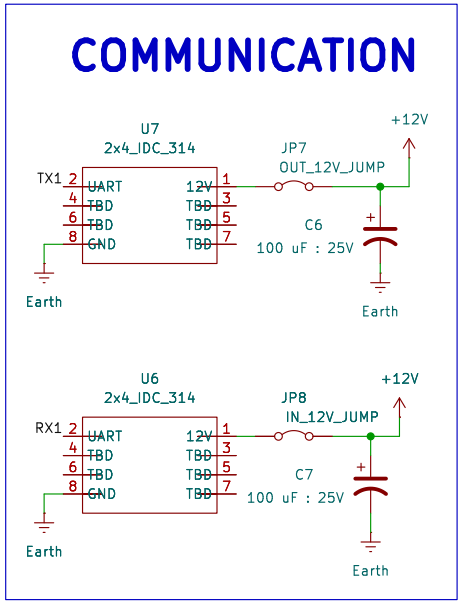

Lia Ryan
EGR314 – Team 303
Sheet: /
File: OLED_Subsystem_Schematic_Lia_Ryan_EGR314_Team_303.kicad_sch

Title: Human Design Interface for Sable

Size: A4	Date: 2026-03-06	**Rev: 3**
KiCad E.D.A. 9.0.4		Id: 1/1