Connections to the main circuit board

Header connector to the isolators on the main circuit board

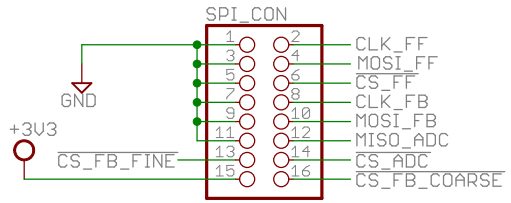

The BeagleBone only supports +3.3V on all I/O pins.
Do not connect to 5V logic signals!

Software is for MOSI_PIC and MISO_PIC pins swapped around - should do this manually for v2 boards and swap traces when designing v3 (JET)

Feedback / ADC SPI connections (CLK_FB, MOSI_FB, MISO_ADC, CS_FB_COARSE, CS_FB_FINE, CS_ADC)

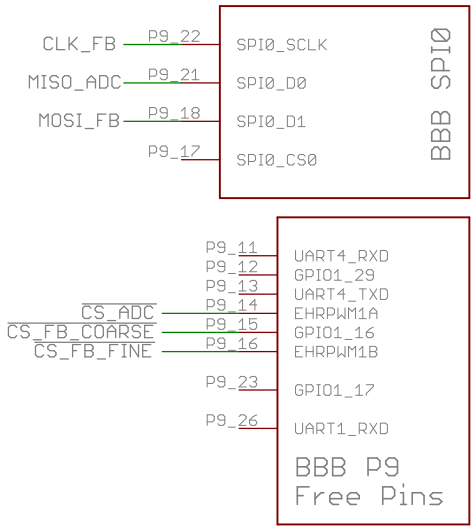

Feedforward SPI connections (CLK_FF, MOSI_FF, CS_FF)

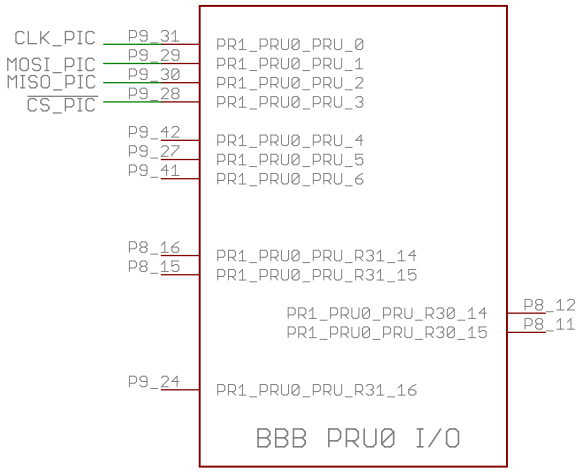

27/04/2017 15:41:58 Date:
1/3 Sheet: TITLE: Beaglebone black cape v2

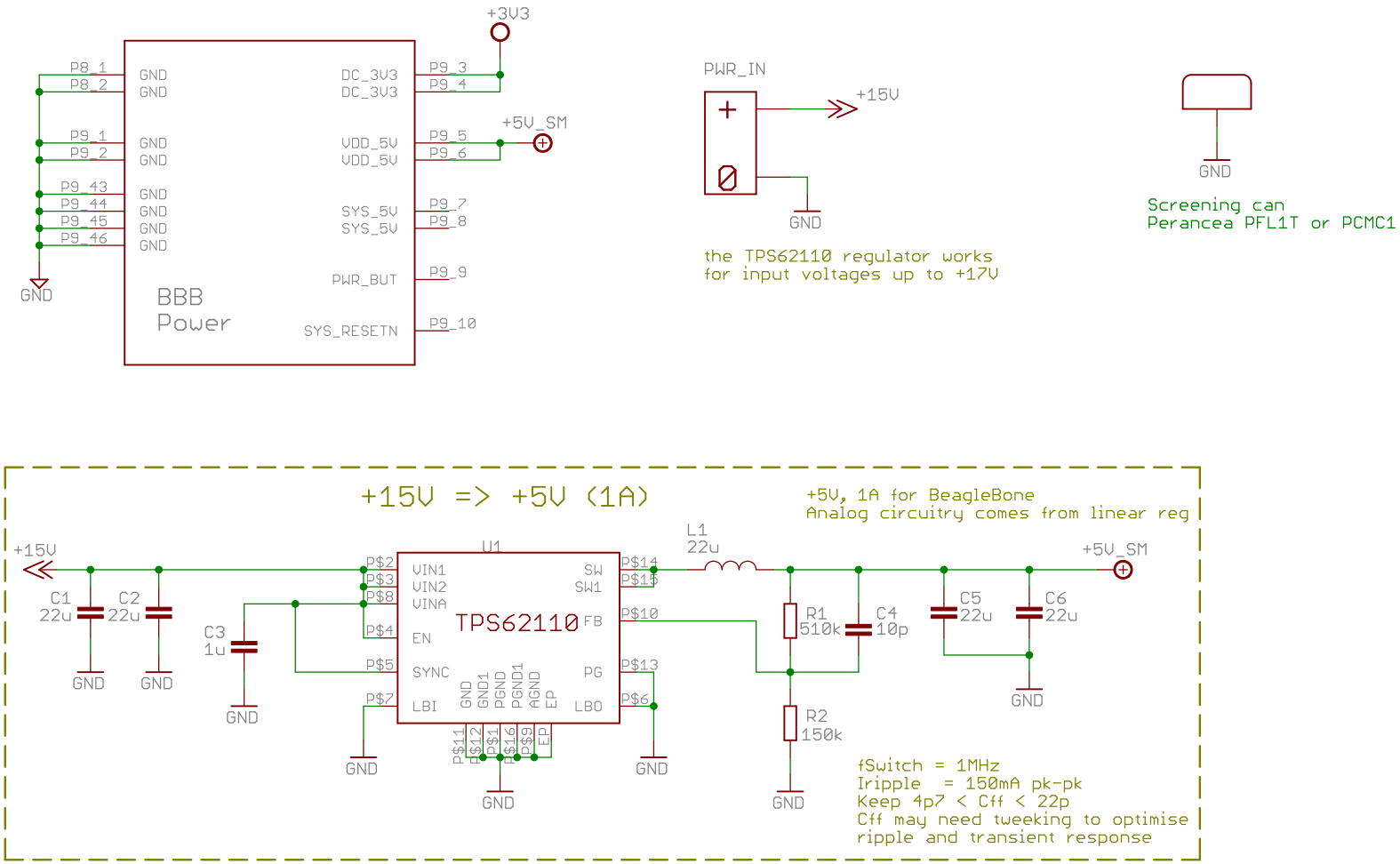

27/04/2017 15:41:58 Date:

2/3 Sheet

Beaglebone black cape v2 TITLE:

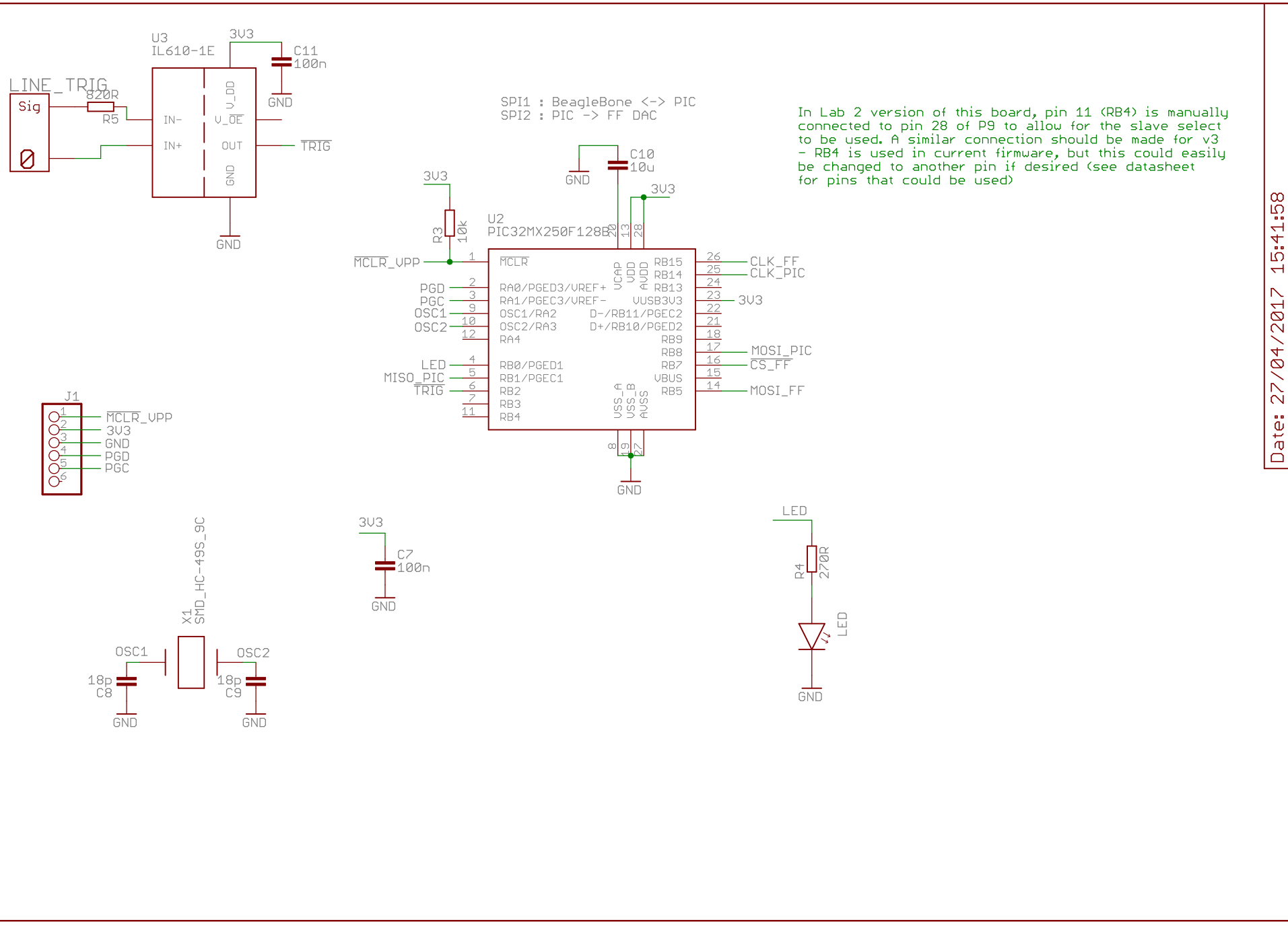
U3
IL610-1E
3V3
C11
100n
GND
LINE_TRIG
820R
R5
Sig
IN-
IN+
V_DD
V_OE
OUT
GND
TRIG
GND
SPI1 : BeagleBone <-> PIC
SPI2 : PIC -> FF DAC
In Lab 2 version of this board, pin 11 (RB4) is manually connected to pin 28 of P9 to allow for the slave select to be used. A similar connection should be made for v3 - RB4 is used in current firmware, but this could easily be changed to another pin if desired (see datasheet for pins that could be used)
C10
10u
GND
3V3
3V3
R3
10k
U2
PIC32MX250F128B
MCLR_VPP
PGD
PGC
OSC1
OSC2
LED
MISO_PIC
TRIG
MCLR
RA0/PGED3/VREF+
RA1/PGEC3/VREF-
OSC1/RA2
OSC2/RA3
RA4
RB0/PGED1
RB1/PGEC1
RB2
RB3
RB4
VCAP
VDD
AVDD
VUSB3V3
D-/RB11/PGEC2
D+/RB10/PGED2
RB9
RB8
RB7
VBUS
RB5
VSS_A
VSS_B
AVSS
RB15
RB14
RB13
CLK_FF
CLK_PIC
3V3
MOSI_PIC
CS_FF
MOSI_FF
GND
J1
MCLR_VPP
3V3
GND
PGD
PGC
3V3
C7
100n
GND
LED
R4
270R
LED
GND
X1
SMD_HC-49S_9C
OSC1
OSC2
18p
C8
18p
C9
GND
GND
Date: 27/04/2017 15:41:58
TITLE: beaglebone black cape v2
Sheet: 3/3