Kinematics Learning

Leandro de Souza Rosa

***Abstract*—...**

***Index Terms*—A, B, C.**

I. Introduction

II. Related Works

[1] probably the first proposal of learning forward kinematics with Neural Network (NN). Uses a monolithic network and a planar 2-link robotic arm.

[2] proposes to learn forward kinematics as a monolithic Gaussian Mixture Model (GMM) model. They test on a real robot with (3?)-Degree of Freedom (DoF).

[3] proposed to learn the forward and inverse kinematics together for parallel robots. The approach uses a monolithic model, which is learned online using a Locally Weighted Projection Regression (LWPR).

[4] proposes to solve the forward kinematics using Support Vector Regression (SVR).

[5] proposes to learn a policy with deep-Q learning. They use simulation and robot farms. (fells like I've the images of this paper in another paper. double check)

[6] presents as analysis on sample efficiency for learning the forward kinematics of linked robots. Using tailored parameterized models is efficient, other methods are not sample efficient. They focus on Fourier-Domain representations.

[7] solves the forward kinematics of a 6-DoF serial manipulator using a monolithic NN.

[8] study the influence of joint-position representations on learning forward kinematics with a monolithic NN for a 6-DoF robotic arm and a cylindrical robot. They test `Euler angles`, `vectorial`, `quaternions`, and `angle-axis` representation. Results favor quaternion representation.

[9] proposes learning the inverse kinematics and the dynamics model of serial robot manipulators using Generative Adversarial Networks (GANs).

[10] evaluates different function approximators for learning monolithic forward kinematic models. NNs perform the best.

[11] uses Gaussian Process Regression (GPR) for learning the forward kinematics based on vision. The approach considers a monolithic Gaussian Process (GP).

[12] uses a monolithic NN for learning forward kinematics for a 6-DoF robot manipulator in simulation. The learned model is transferred to a real robot (using the same training signals). Results show that the real robot achieves higher accuracy.

[13] seems to be the same as [12].

[14] uses a monolithic NN for learning forward and inverse kinematics of a 5-DoF robotic arm (check it out it seems they do it for 2 DoFs).

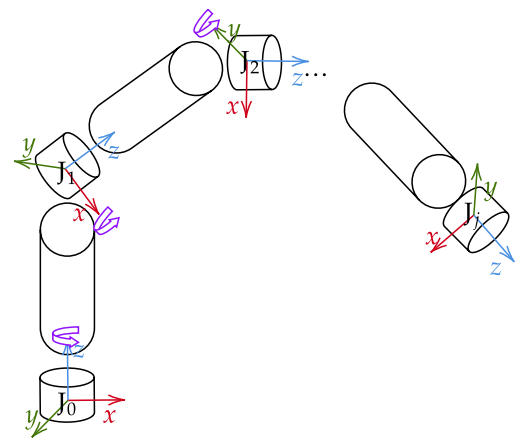

Fig. 1. A serial manipulator with j axes and $j+1$ joints J_i. Each axis is connected by a joint which is associated with a Cartesian reference frame (red, gree, blue) and can rotate over an arbitrary axis (purple). We consider, without loss of generality, the position of J_0 fixed at the world origin, and J_j to be the end-effector, which does not rotate. The Cartesian position of joint $\mathrm{J}_i | i \in \{1, \ldots, j\}$ ($\mathbf{x}_i$) in the reference frame of J_{i_1} depends only on q_{i-1}.

[15] basically lists methods for solving forward kinematics. (does not really add anything)

[16] uses a monolithic NN for learning forward kinematics of a 3-DoF robotic arm.

III. Preliminaries

Consider the serial robot manipulator illustrated in Figure 1 with j links and $j+1$ joints. The reference frames of the world and of J_0 are fixed and coincide.

Our task is to estimate the Cartesian position of each joint $\mathrm{J}_i | i \in \{1, \ldots, j\}$ in the world reference frame ($\mathbf{x}$) as a function of the rotation angles of $\mathrm{J}_i | i \in \{0, \ldots, j-1\}$ ($q_i | i \in \{0, \ldots, j-1\}$), as described in Equation 1. The Cartesian pose of each joint J_i is a d dimensional array (usually $n = 2, 3$), resulting in the estimation of $n \times j$ functions in total.

$$\tilde{\mathbf{x}}(\mathbf{q}) = \left[\begin{array}{cccc} \tilde{\mathbf{x}}_1(q_0) & \tilde{\mathbf{x}}_2(q_0, q_1) & \ldots & \tilde{\mathbf{x}}_j(q_0, \ldots, q_{j-1}) \end{array} \right] \quad (1)$$

The function $\mathbf{x}(\mathbf{q})$ can be expressed using Denavit-Hartenberg (DH) transformation matrices [17]. For a given J_i, the a transformation between its reference frame and the one of J_{i-1} is described by 2, where $\mathbf{T}$ and $\mathbf{D}$ are the rotation and displacement matrices, respectively.

$$\mathbf{T}^i_{i-1} = \left[\begin{array}{cc} \mathbf{R}^i_{i-1}(q_{i-1}) & \mathbf{D}^i_{i-1}(q_{i-1}) \\ \mathbf{0}_{1\times 3} & 1 \end{array} \right] \quad (2)$$

For a serial manipulator, the transformations can be chained for obtaining a transformation for any given joint J_i in the world reference frame, according to Equation 3.

0000–0000/00$00.00 © 2021 IEEE

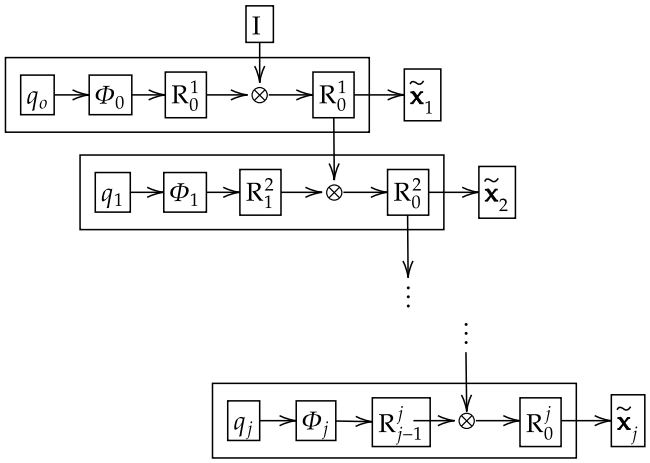

Fig. 2. Proposed architecture. For each joint $i \in \{1, \dots, j\}$, a network Φ_i^l learns the DH transformation from joint $i-1$ to i $\mathbf{R}_{i-1}^i$. $\mathbf{R}_{i-1}^i$ is multiplied by the cumulative transformation of all previous joints, resulting in $\mathbf{R}_0^i$, from which the Cartesian position of joint i $\tilde{\mathbf{x}}_i$ is obtained directly.

$$\mathbf{x}_i = \prod_{k=1}^{i} \mathbf{T}_{k-1}^k \mid i \in \{1, \dots, j\} \tag{3}$$

IV. Proposed Architecture

A. Overview

While approaches in the literature propose to learn a monolithic approximator $\tilde{\mathbf{x}}^m = \Phi^m(\mathbf{q}) : \mathbb{R}^j \rightarrow \mathbb{R}^{n \times j}$, our main idea is to learn one approximator for each joint J_i, which encodes $\mathbf{T}_{i-1}^i$, and thus learning j predictors $\tilde{\mathbf{x}}_i^l = \Phi_i^l(\mathbf{q_i}) : \mathbb{R}^1 \rightarrow \mathbb{R}^{n \times (n+1)} \mid i \in \{1, \dots j\}$, and joining all Φ_i^l leads to the proposed model Φ^l.

B. Loss Function

For training Φ, we follow the approaches in the literature (citation needed)and use the average Euclidean distance between the joints and their respective prediction, as described in Equation 4. Note that some approaches in the literature consider only the end-effector position and its prediction, which is reasonable since in a real robot, the position of individual joints is hard to obtain, while the end-effector's position can be obtained with off-the-shelf trackers and cameras (citation). In contrast, since we perform the training in simulation, we have the flexibility of considering all joints, leading to a richer loss signal, improving the training convergence.

$$\mathcal{L} = \frac{1}{j} \sum_{k=1}^{j} ||\tilde{x}_k - \mathbf{x}_k|| \tag{4}$$

C. Training Procedure

Since in this stage we use simulation, both Φ^m and Φ^l are trained in a straight-forward fashion according to Algorithm 1. For each epoch of training, $nSamples$ random poses are sampled in joint space (line 3), and the respective Cartesian position of each joint is obtained directly from the simulator (line 4) and added to a memory buffer (line 5). The memory size is limited, and upon additions further than its limit, it drops a percentage of its oldest data (we use a 10% data drop in all experiments) for reducing data allocation overheads. Next, $nIterations$ of training is done with the data already within the memory, which are done by randomly sampling $batchSize$ samples from the memory (line 8), computing the average loss (lines 9 to 13), which is then back-propagated through the network (line 14).

Algorithm 1: Training procedure for Φ.

1 **for** $e \in \{1, \dots, epochs\}$ **do**
2 **for** $r \in \{1, \dots, nSamples\}$ **do**
3   $q \leftarrow$ random joint positions;
4   $x \leftarrow$ Cartesian position of all joints given q;
5   add (q, x) to $memory$;
6 **end**
7 **for** $t \in \{1, \dots, nIterations\}$ **do**
8   $(qs, xs) \leftarrow$ get $batchSize$ random samples from $memory$;
9   $meanLoss \leftarrow 0$;
10   **for** $(q, x) \in (qs, xs)$ **do**
11    $meanLoss \leftarrow acc + \mathcal{L}$;
12   **end**
13   $meanLoss \leftarrow acc/batchSize$;
14   backpropagate $meanLoss$ through Φ;
15 **end**
16 **end**

It is worthy to notice that in our tests, we observed that randomly sampling poses leads to a much higher efficiency than performing random walks, which is to be expected due to the better state space coverage. However, when considering a real robot in the Reinforcement Learning (RL) loop, it is unpractical to sample the state space this way, since the robot will be naturally performing a random walk. In section VI, we present a RL case of study highlighting the proposed architecture impacts in this scope.

V. Results

A. Testing Environment

We build upon the `Reacher` environment from OpenAI Gym [18], which consists of a 2D serial manipulator with 2 joints simulated using MuJoCo [19]. In order to evaluate the proposed approach for more realistic robots, we extend the environment enabling for 3D, and adding models for robots up to 7 joints[1].

We implement Φ^m and Φ^l as feed-forward NN. While other approximators could be used, e.g., GPs as in [11], their evaluation falls out-of-the-scope of this paper.

B. Parameters Tuning

In order to assure appropriate hyper-parameters for Φ, we perform a tuning for each model, which results in the values

[1]Publicly available source code: https://github.com/lsrosa/kinematics_learning

$n = 2$							
j	1	2	3	4	5	6	7
lr							
Φ^m `arch`							
$n = 3$							
lr							
Φ^m `arch`							
$n = 2$							
lr							
Φ^l `arch`							
$n = 3$							
lr							
Φ^l `arch`							

TABLE I
TUNING PARAMETERS FOR 2D AND 3D ROBOTS WITH VARYING NUMBER OF JOINTS.

presented in Table I, where lr is the learning rate, and `arch` is an array containing the number of elements neurons in each NN layer. For the learning hyper-parameter of Algorithm 1, we found that $nSamples = 1e^3$, $epochs = 500$, $nIterations = 50$, $batchSize = 100$ are adequate values for all networks.

C. Loss and Accuracy Results

Figure 3 presents the losses when learning Φ^m and Φ^l, which shows that the proposed architecture outperforms the monolithic approach found used in the literature.

For qualitative comparison, Figure 4 presents the joints position estimation obtained by Φ^m and Φ^l for $n = 3$ and $j = 7$ only (the 2D and other joint numbers cases are omitted for briefness), in which the higher accuracy can be seem.

Next, to demonstrate the accuracy impacts, we estimate the end-effector velocity $\dot{x}_j = [\mathbf{J}\dot{q}]_j$, where $\mathbf{J}$ is the unknown Jacobian matrix of the robot, as $\tilde{\dot{x}}_j = \left[\frac{\partial \Phi}{\partial q}\dot{q}\right]_j$. That is, we use the learned network for estimating the unknown Jacobian of the model, which has its well-known applications in inverse kinematics [20] computation, Cartesian impedance controllers [21], and tracking controllers [22]. Figure 5 shows the velocity estimation and ground-truth obtained from the simulator for $n = 3$ and $j = 7$. The better accuracy of the proposed architecture indicates its adequacy for being used in higher level applications, while the monolithic architecture poor accuracy might impact higher level applications badly.

VI. REINFORCEMENT LEARNING CASE OF STUDY

This section presents a case of study using the forward kinematics estimation in a RL loop, which consists of two steps. In the fist step, we train Φ and a policy $\Pi : \mathbb{R}^{n\times j} \rightarrow \mathbb{R}^j$, which given the Cartesian position of the robot joints, learns the torques for each joint for moving the end-effector towards the target position. In this first step, we use random sampling for learning Φ, and the ground truth values from simulation for learning Π. In the second step, we create a different robot with the same number of joints, by varying its links' dimension according to a normal distribution $\mathcal{N}(\mathbf{d}, \sigma = 0.01)$, where $\mathbf{d}$ is the dimensions of the robot used in the first step, and retrain both Φ and Π on the new robot. As such, Π encompasses learning the robot's dynamics, and control, which is a considerably hard task for high-dimensions.

This study case mimics a straight-forward transfer-learning case, in which first a model is firstly trained in simulation, and then refined in a real robot, which is slightly different from the simulated one. These differences may come from imprecise measures, or from an unknown model, as in the case of budget robot manipulators [25]. Furthermore, more elaborated transfer-learning approaches [23], [24] might also benefit from the proposed network, but its evaluation falls out-or-the-scope with this paper.

The results in this section are limited to the 3D and a robot with 7 joints, and the second part of the learning is also done in simulation. This limitation is due to the extensive long time necessary to tune, and learn Π, and then to adapt both Φ and Π to the new environment, since in the RL loop, the reward is sparse and the robot performs a random-walk sampling.

ACKNOWLEDGEMENTS

This work was supported by ....

REFERENCES

[1] L. Nguyen, R. Patel, and K. Khorasani, "Neural network architectures for the forward kinematics problem in robotics," in *1990 IJCNN International Joint Conference on Neural Networks*, 1990, pp. 393–399 vol.3.

[2] E. Gribovskaya, S. Khansari-Zadeh, and A. Billard, "Learning non-linear multivariate dynamics of motion in robotic manipulators," *The International Journal of Robotics Research*, vol. 30, no. 1, pp. 80–117, 2011. [Online]. Available: https://doi.org/10.1177/0278364910376251

[3] B. Damas and J. Santos-Victor, "An online algorithm for simultaneously learning forward and inverse kinematics," in *2012 IEEE/RSJ International Conference on Intelligent Robots and Systems*, 2012, pp. 1499–1506.

[4] A. Morell, M. Tarokh, and L. Acosta, "Solving the forward kinematics problem in parallel robots using support vector regression," *Engineering Applications of Artificial Intelligence*, vol. 26, no. 7, pp. 1698–1706, 2013. [Online]. Available: https://www.sciencedirect.com/science/article/pii/S0952197613000535

[5] S. Gu, E. Holly, T. Lillicrap, and S. Levine, "Deep reinforcement learning for robotic manipulation with asynchronous off-policy updates," in *2017 IEEE International Conference on Robotics and Automation (ICRA)*, 2017, pp. 3389–3396.

[6] D. Kubus, R. Rayyes, and J. J. Steil, "Learning forward and inverse kinematics maps efficiently," in *2018 IEEE/RSJ International Conference on Intelligent Robots and Systems (IROS)*, 2018, pp. 5133–5140.

[7] M. Theofanidis, S. I. Sayed, J. Cloud, J. Brady, and F. Makedon, "Kinematic estimation with neural networks for robotic manipulators," in *Artificial Neural Networks and Machine Learning – ICANN 2018*, V. Kůrková, Y. Manolopoulos, B. Hammer, L. Iliadis, and I. Maglogiannis, Eds. Cham: Springer International Publishing, 2018, pp. 795–802.

[8] R. M. Grassmann and J. Burgner-Kahrs, "On the merits of joint space and orientation representations in learning the forward kinematics in se(3)," in *Proceedings of Robotics: Science and Systems*, Freiburgim-Breisgau, Germany, June 2019.

[9] H. Ren and P. Ben-Tzvi, "Learning inverse kinematics and dynamics of a robotic manipulator using generative adversarial networks," *Robotics and Autonomous Systems*, vol. 124, p. 103386, 2020. [Online]. Available: https://www.sciencedirect.com/science/article/pii/S0921889019303501

[10] I. M. Loutfi, A. B. Boutchouang, A. Melingui, O. Lakhal, F. B. Motto, and R. Merzouki, "Learning-based approaches for forward kinematic modeling of continuum manipulators," *IFAC-PapersOnLine*, vol. 53, no. 2, pp. 9899–9904, 2020, 21st IFAC World Congress. [Online]. Available: https://www.sciencedirect.com/science/article/pii/S2405896320334595

[11] A. Dalla Libera, N. Castaman, S. Ghidoni, and R. Carli, "Autonomous learning of the robot kinematic model," *IEEE Transactions on Robotics*, vol. 37, no. 3, pp. 877–892, 2021.

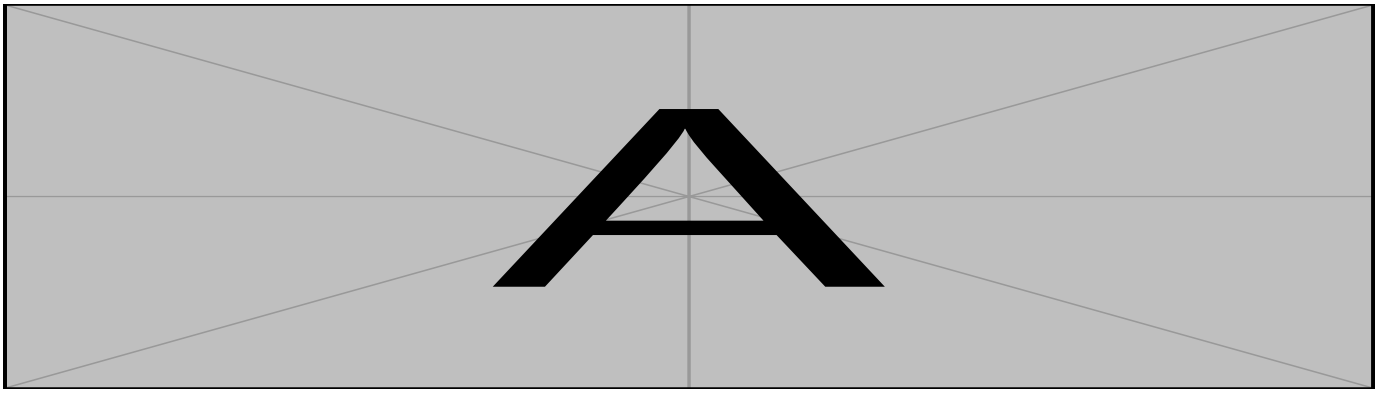

Fig. 3. Loss comparison between Φ^m and Φ^l. The solid line and shaded area represent the mean loss and the area between minimum and maximum losses over 30 trials.

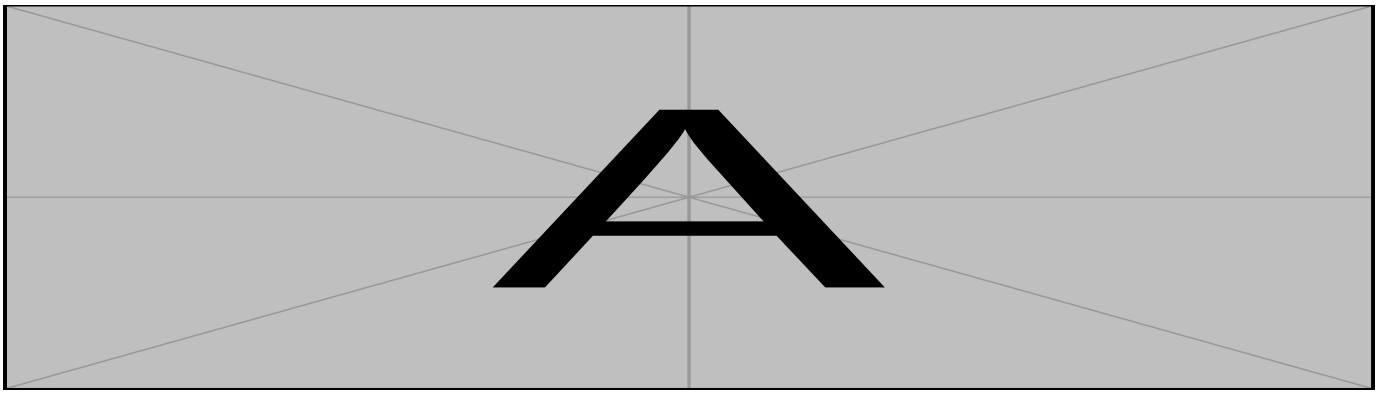

Fig. 4. Joints position estimation comparison for Φ^m and Φ^l.

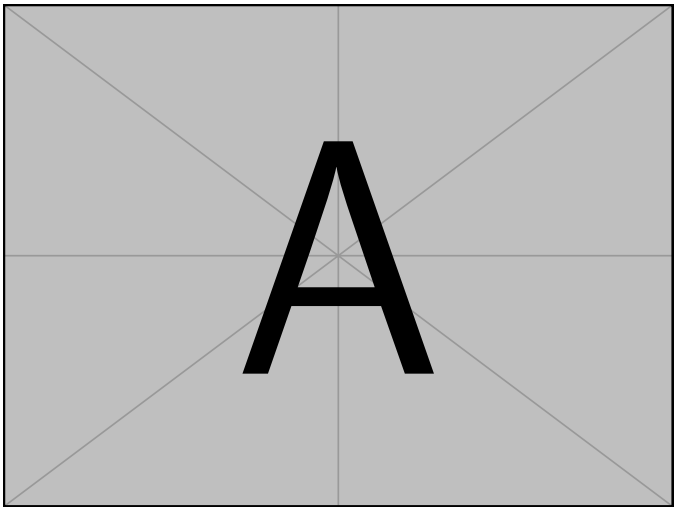

Fig. 5. End-effector velocity estimation comparison for Φ^m and Φ^l.

[12] K. P. and B. B. Choudhury, "Transfer Learning-Based Artificial Neural Network for Forward Kinematic Estimation of 6-DOF Robot," *International Journal of Applied Metaheuristic Computing (IJAMC)*, vol. 13, no. 1, pp. 1–15, January 2022. [Online]. Available: https://ideas.repec.org/a/igg/jamc00/v13y2022i1p1-15.html

[13] P. Kesaba and B. Choudhury, "Forward kinematic analysis of 6-r industrial robot using active sampled neural network regressor," *International Journal of Software Innovation*, vol. 10, no. 1, pp. 1–14, 2022 2022. [Online]. Available: https://www.proquest.com/scholarly-journals/forward-kinematic-analysis-6-r-industrial-robot/docview/2904627281/se-2

[14] A.-N. Sharkawy, "Forward and inverse kinematics solution of a robotic manipulator using a multilayer feedforward neural network," *Journal of Mechanical and Energy Engineering*, vol. 6, no. 2, Oct. 2022. [Online]. Available: https://jmee.tu.koszalin.pl/ojs/index.php/jmee/article/view/300

[15] T. P. Valayil and R. S. Augustine, "Methods to solve forward kinematics of parallel and serial manipulators," in *AIP Conference Proceedings*, vol. 2670, no. 1. AIP Publishing, 2022.

[16] A.-N. Sharkawy and S. Khairullah, "Forward and inverse kinematics solution of a 3-dof articulated robotic manipulator using artificial neural network," *International Journal of Robotics and Control Systems*, vol. 3, no. 2, pp. 330–353, 2023. [Online]. Available: https://www.pubs2.ascee.org/index.php/IJRCS/article/view/1017

[17] S. Kucuk and Z. Bingul, *Robot Kinematics: Forward and Inverse Kinematics*, S. Cubero, Ed. InTech, 2006.

[18] G. Brockman, V. Cheung, L. Pettersson, J. Schneider, J. Schulman, J. Tang, and W. Zaremba, "Openai gym," 2016.

[19] E. Todorov, T. Erez, and Y. Tassa, "Mujoco: A physics engine for model-based control," in *2012 IEEE/RSJ International Conference on Intelligent Robots and Systems*. IEEE, 2012, pp. 5026–5033.

[20] K. J. Waldron, S.-L. Wang, and S. J. Bolin, "A Study of the Jacobian Matrix of Serial Manipulators," *Journal of Mechanisms, Transmissions, and Automation in Design*, vol. 107, no. 2, pp. 230–237, 06 1985. [Online]. Available: https://doi.org/10.1115/1.3258714

[21] P. Sánchez-Sánchez and F. Reyes-Cortés, "Cartesian control for robot manipulators," *robot manipulators trends and development*, pp. 165–212, 2010.

[22] D. Chen, Y. Zhang, and S. Li, "Tracking control of robot manipulators with unknown models: A jacobian-matrix-adaption method," *IEEE Transactions on Industrial Informatics*, vol. 14, no. 7, pp. 3044–3053, 2018.

[23] J. Stüber, M. Kopicki, and C. Zito, "Feature-based transfer learning for robotic push manipulation," in *2018 IEEE International Conference on Robotics and Automation (ICRA)*, 2018, pp. 5643–5650.

[24] B. Bócsi, L. Csató, and J. Peters, "Alignment-based transfer learning for robot models," in *The 2013 International Joint Conference on Neural Networks (IJCNN)*, 2013, pp. 1–7.

[25] L. Čehovin Zajc, A. Rezelj, and D. Skočaj, "Low-cost open-source robotic platform for education," *IEEE Transactions on Learning Technologies*, vol. 16, no. 1, pp. 18–25, 2023.