Customer

EMPRESARIOS AGRUPADOS

EMPRESARIOS AGRUPADOS
C/Magallanes, 3
28015
ESPAÑA
3098000

http://www.empresariosagrupados.es/

Project:

7186-GIS_LSST
7186
LSST Global Safety Interlock System Design

DOC
PROJECT DOCUMENTATION

IND
PROJECT INDEX

Number of pages: 178

Made by:

IK4-TEKNIKER
AVDA. OTAOLA 20
20600 Eibar (Gipuzkoa) Spain
Tfno. : (+34) 943 206744
Fax : (+34) 943 202757
Web: www.tekniker.es

Review	Review description	Date	Reviewed
2.0	CHILE ASEMBLY	29/08/2019	JOSE MANUEL
3.0	CHILE ASEMBLY (Specific cabinets for M2CAM & PfAux)	17/09/2019	JOSE MANUEL

Drew by: J.M.CASTAÑO
Reviewed: F.LÓPEZ GARCIA
Date: 04/05/2017
Replaces:
Replaced by:

Table of contents

F06_004_TK

Assignment	Page	Page description
DOC (PROJECT DOCUMENTATION)		IND (PROJECT INDEX)
	001	Title page / cover sheet
	002	Index : =DOC+IND/001 - =E1+GIS-CPU-CBT0101/510
	002.a	Index : =E1+GIS-CPU-CBT0101/511 - =E1+GIS-AcFiEa-CBT0101/801
	002.b	Index : =E1+GIS-AcFiEa-CBT0101/802 - =E1+GIS-M2CAM-CBT0101/500
	002.c	Index : =E1+GIS-M2CAM-CBT0101/501 - =E1+GIS-PfAux-CBT0101/524
	002.d	Index : =REPORT+GIS-CPU-CBT0101/001 - =REPORT+GIS-CPU-CBT0101/3016
	002.e	Index: =REPORT+GIS-CPU-CBT0101/3017 - =REPORT+GIS-M2CAM-CBT0101/1000
	002.f	Index : =REPORT+GIS-M2CAM-CBT0101/1000.a - =REPORT+GIS-PfAux-CBT0101/3001
	102	Structure identifier overview
DOC (PROJECT DOCUMENTATION)		BD (BLOCK DIAGRAM)
	001	Title page / cover sheet
	200	TOTAL ISS BLOCK DIAGRAM
	201	GIS BLOCK DIAGRAM
E1 (MACHINE)		GIS-CPU-CBT0101 (GIS CPU CABINET)
	001	Title page / cover sheet
	002	POWER
	020	DC POWER
	028	DC DISTRIBUTION
	201	HMI
	210	ETHERNET SWITCH
	221	MM-SC OPTIC FIBER TO RJ45 CONVERSOR
	222	MM-SC OPTIC FIBER TO RJ45 CONVERSOR
	500	EMERGENCY PLC PSSuniversal
	501	POWER PSSu
	502	SAFETY NET CPU
	503	SAFETY NET SWITCH 1
	504	SAFETY NET SWITCH 1
	510	SAFETY DIGITAL INPUTS

IK4 TEKNIKER Research Alliance

IK4-TEKNIKER
AVDA. OTAOLA 20
20600 Eibar (Gipuzkoa) Spain
Tfno.:(+34) 943 206744
Fax: (+34) 943 202757
Web: www.tekniker.es

Date	30/08/2022	2.0	29/08/2019	JOSE MANUEL			
Reviewed	F.LÓPEZ GARCIA	3.0	17/09/2019	JOSE MANUEL			
Drew by	JOSE MANUEL	Review	Date	Name	Review	Date	Name

7186-GIS_LSST 7186

LSST Global Safety Interlock System Design

Replaces | Replaced by

Index : =DOC+IND/001 - =E1+GIS-CPU-CBT0101/510

Customer: EMPRESARIOS AGRUPADOS

C/Magallanes, 3
28015
3098000

http://www.empresariosagrupados.es/

= DOC
+ IND

Table of contents

F06_004_TK

Assignment	Page	Page description
E1 (MACHINE)		GIS-CPU-CBT0101 (GIS CPU CABINET)
	511	SAFETY DIGITAL INPUTS
	512	SAFETY DIGITAL INPUTS
	513	SAFETY DIGITAL INPUTS
	520	SAFETY DIGITAL OUTPUTS
	521	SAFETY DIGITAL OUTPUTS
	522	SAFETY DIGITAL OUTPUTS
	801	CABINET GENERAL VIEW
	802	MOUNTING PLATE
	803	CABINET DIMENSIONS
	804	CABLE ENTRANCE DIMENSIONS
E1 (MACHINE)		GIS-AcFiEa-CBT0101 (GIS ACCESS FIRE EARTHQUAKE CABINET)
	001	Title page / cover sheet
	002	POWER
	020	DC POWER
	028	DC DISTRIBUTION
	220	MM-SC OPTIC FIBER TO RJ45 CONVERSOR
	500	EMERGENCY PLC PSSuniversal
	501	POWER SAFETY PSS
	502	SAFETY NET
	510	SAFETY DIGITAL INPUTS
	511	SAFETY DIGITAL INPUTS
	512	SAFETY DIGITAL INPUTS
	513	SAFETY DIGITAL INPUTS
	520	SAFETY DIGITAL OUTPUTS
	521	SAFETY DIGITAL OUTPUTS
	522	SAFETY DIGITAL OUTPUTS
	523	SAFETY DIGITAL OUTPUTS
	801	CABINET GENERAL VIEW

Table of contents

F06_004_TK

Assignment	Page	Page description
E1 (MACHINE)		GIS-AcFiEa-CBT0101 (GIS ACCESS FIRE EARTHQUAKE CABINET)
	802	MOUNTING PLATE
	803	CABINET DIMENSIONS
	804	CABLE ENTRANCE DIMENSIONS
E1 (MACHINE)		GIS-LASER-CBT0101 (GIS LASER CONTROLER CABINET)
	001	Title page / cover sheet
	002	POWER
	020	DC POWER
	028	DC DISTRIBUTION
	220	MM-SC OPTIC FIBER TO RJ45 CONVERSOR
	500	EMERGENCY PLC PSSuniversal
	501	POWER SAFETY PSS
	502	SAFETY NET
	510	SAFETY DIGITAL INPUTS
	511	SAFETY DIGITAL INPUTS
	520	SAFETY DIGITAL OUTPUTS
	521	SAFETY DIGITAL OUTPUTS
	522	SAFETY DIGITAL OUTPUTS
	801	CABINET GENERAL VIEW
	802	MOUNTING PLATE
	803	CABINET DIMENSIONS
	804	CABLE ENTRANCE DIMENSIONS
E1 (MACHINE)		GIS-M2CAM-CBT0101 (GIS M2 CAMERA CABINET)
	001	Title page / cover sheet
	002	POWER
	020	DC POWER
	028	DC DISTRIBUTION
	220	MM-SC OPTIC FIBER TO RJ45 CONVERSOR
	500	EMERGENCY PLC PSSuniversal

Table of contents

F06_004_TK

Assignment	Page	Page description
E1 (MACHINE)		GIS-M2CAM-CBT0101 (GIS M2 CAMERA CABINET)
	501	POWER SAFETY PSS
	502	SAFETY NET
	510	SAFETY DIGITAL INPUTS
	511	SAFETY DIGITAL INPUTS
	512	SAFETY DIGITAL INPUTS
	520	SAFETY DIGITAL OUTPUTS
	521	SAFETY DIGITAL OUTPUTS
	522	SAFETY DIGITAL OUTPUTS
	523	SAFETY DIGITAL OUTPUTS
	524	SAFETY DIGITAL OUTPUTS
	525	SAFETY DIGITAL OUTPUTS
	526	SAFETY DIGITAL OUTPUTS
E1 (MACHINE)		GIS-PfAux-CBT0101 (GIS Pflow & Auxiliary control CABINET)
	001	Title page / cover sheet
	002	POWER
	020	DC POWER
	028	DC DISTRIBUTION
	220	MM-SC OPTIC FIBER TO RJ45 CONVERSOR
	500	EMERGENCY PLC PSSuniversal
	501	POWER SAFETY PSS
	502	SAFETY NET
	510	SAFETY DIGITAL INPUTS
	511	SAFETY DIGITAL INPUTS
	520	SAFETY DIGITAL OUTPUTS
	521	SAFETY DIGITAL OUTPUTS
	522	SAFETY DIGITAL OUTPUTS
	523	SAFETY DIGITAL OUTPUTS
	524	SAFETY DIGITAL OUTPUTS

Table of contents

F06_004_TK

Assignment	Page	Page description
REPORT (REPORT)		GIS-CPU-CBT0101 (GIS CPU CABINET)
	001	Title page / cover sheet
	1000	Parts list : PILZ.264538 - PXC.0402174
	1000.a	Parts list : SE.NSYS3D6G12840P - PXC.3209510
	1000.b	Parts list : PXC.3209510 - PXC.3209510
	1000.c	Parts list : PXC.3214356 - PXC.3208100
	1000.d	Parts list : PXC.3208100 - PXC.3208142
	2002	Terminal diagram =E1+GIS-CPU-CBT0101-X1
	2003	Terminal diagram =E1+GIS-CPU-CBT0101-X2
	2003.a	Terminal diagram =E1+GIS-CPU-CBT0101-X2
	2004	Terminal diagram =E1+GIS-CPU-CBT0101-X10
	2004.a	Terminal diagram =E1+GIS-CPU-CBT0101-X10
	3000	Cable overview : =E1+GIS-CPU-CBT0101-OF1 - =E1+GIS-CPU-CBT0101-504W1
	3001	Cable diagram =E1+GIS-CPU-CBT0101-OF1
	3002	Cable diagram =E1+GIS-CPU-CBT0101-OF2
	3003	Cable diagram =E1+GIS-CPU-CBT0101-OF3
	3004	Cable diagram =E1+GIS-CPU-CBT0101-OF4
	3005	Cable diagram =E1+GIS-CPU-CBT0101-OF5
	3006	Cable diagram =E1+GIS-CPU-CBT0101-OF6
	3007	Cable diagram =E1+GIS-CPU-CBT0101-OF7
	3008	Cable diagram =E1+GIS-CPU-CBT0101-OF8
	3009	Cable diagram =E1+GIS-CPU-CBT0101-OF9
	3010	Cable diagram =E1+GIS-CPU-CBT0101-OF11
	3011	Cable diagram =E1+GIS-CPU-CBT0101-210W1
	3012	Cable diagram =E1+GIS-CPU-CBT0101-502W1
	3013	Cable diagram =E1+GIS-CPU-CBT0101-503W1
	3014	Cable diagram =E1+GIS-CPU-CBT0101-503W3
	3015	Cable diagram =E1+GIS-CPU-CBT0101-503W4
	3016	Cable diagram =E1+GIS-CPU-CBT0101-503W5

Table of contents

F06_004_TK

Assignment	Page	Page description
REPORT (REPORT)		GIS-CPU-CBT0101 (GIS CPU CABINET)
	3017	Cable diagram =E1+GIS-CPU-CBT0101-503W6
	3018	Cable diagram =E1+GIS-CPU-CBT0101-504W1
REPORT (REPORT)		GIS-AcFiEa-CBT0101 (GIS ACCESS FIRE EARTHQUAKE CABINET)
	001	Title page / cover sheet
	1000	Parts list : PILZ.314 085 - UNEX.80.40.77
	1000.a	Parts list : UNEX.80.40.77 - PXC.3214356
	1000.b	Parts list : PXC.3208100 - PXC.3208100
	1000.c	Parts list : PXC.3208100 - PXC.3208142
	2002	Terminal diagram =E1+GIS-AcFiEa-CBT0101-X1
	2003	Terminal diagram =E1+GIS-AcFiEa-CBT0101-X2
	2004	Terminal diagram =E1+GIS-AcFiEa-CBT0101-X10
	2004.a	Terminal diagram =E1+GIS-AcFiEa-CBT0101-X10
	3000	Cable overview : =E1+GIS-AcFiEa-CBT0101-220W1 - =E1+GIS-AcFiEa-CBT0101-220W1
	3001	Cable diagram =E1+GIS-AcFiEa-CBT0101-220W1
REPORT (REPORT)		GIS-LASER-CBT0101 (GIS LASER CONTROLER CABINET)
	001	Title page / cover sheet
	1000	Parts list : PILZ.314 085 - TS 35_15
	1000.a	Parts list : UNEX.80.60.77 - PXC.3209510
	1000.b	Parts list : PXC.3214356 - PXC.3208100
	1000.c	Parts list : PXC.3208100 - PXC.3208142
	2002	Terminal diagram =E1+GIS-LASER-CBT0101-X1
	2003	Terminal diagram =E1+GIS-LASER-CBT0101-X2
	2004	Terminal diagram =E1+GIS-LASER-CBT0101-X10
	3000	Cable overview : =E1+GIS-LASER-CBT0101-220W1 - =E1+GIS-LASER-CBT0101-220W1
	3001	Cable diagram =E1+GIS-LASER-CBT0101-220W1
REPORT (REPORT)		GIS-M2CAM-CBT0101 (GIS M2 CAMERA CABINET)
	001	Title page / cover sheet
	1000	Parts list : PILZ.314 085 - UNEX.80.60.77

IK4 TEKNIKER Research Alliance

IK4-TEKNIKER
AVDA. OTAOLA 20
20600 Eibar (Gipuzkoa) Spain
Tfno.:(+34) 943 206744
Fax: (+34) 943 202757
Web: www.tekniker.es

Date	30/08/2022	2.0	29/08/2019	JOSE MANUEL				
Reviewed	F.LÓPEZ GARCIA	3.0	17/09/2019	JOSE MANUEL				
Drew by	JOSE MANUEL	Review	Date	Name	Review	Date	Name	

7186-GIS_LSST 7186

LSST Global Safety Interlock System Design

Replaces | Replaced by

Index : =REPORT+GIS-CPU-CBT0101/3017
- =REPORT+GIS-M2CAM-CBT0101/1000

Customer: EMPRESARIOS AGRUPADOS
C/Magallanes, 3
28015
3098000
http://www.empresariosagrupados.es/

= DOC
+ IND

Table of contents

F06_004_TK

Assignment	Page	Page description
REPORT (REPORT)		GIS-M2CAM-CBT0101 (GIS M2 CAMERA CABINET)
	1000.a	Parts list : UNEX.80.60.77 - PXC.3214356
	1000.b	Parts list : PXC.3208100 - PXC.3208100
	1000.c	Parts list : PXC.3208100 - PXC.3208142
	2002	Terminal diagram =E1+GIS-M2CAM-CBT0101-X1
	2003	Terminal diagram =E1+GIS-M2CAM-CBT0101-X2
	2004	Terminal diagram =E1+GIS-M2CAM-CBT0101-X10
	2004.a	Terminal diagram =E1+GIS-M2CAM-CBT0101-X10
	3000	Cable overview : =E1+GIS-M2CAM-CBT0101-220W1 - =E1+GIS-M2CAM-CBT0101-220W1
	3001	Cable diagram =E1+GIS-M2CAM-CBT0101-220W1
REPORT (REPORT)		GIS-PfAux-CBT0101 (GIS Pflow & Auxiliary control CABINET)
	001	Title page / cover sheet
	1000	Parts list : PILZ.314 085 - PXC.3030417
	1000.a	Parts list : PXC.3022276 - PXC.3208100
	1000.b	Parts list : PXC.3208142 - PXC.3208100
	1000.c	Parts list : PXC.3208100 - PXC.3208142
	2002	Terminal diagram =E1+GIS-PfAux-CBT0101-X1
	2003	Terminal diagram =E1+GIS-PfAux-CBT0101-X2
	2004	Terminal diagram =E1+GIS-PfAux-CBT0101-X10
	3000	Cable overview : =E1+GIS-PfAux-CBT0101-220W1 - =E1+GIS-PfAux-CBT0101-220W1
	3001	Cable diagram =E1+GIS-PfAux-CBT0101-220W1

IK4 TEKNIKER Research Alliance

IK4-TEKNIKER
AVDA. OTAOLA 20
20600 Eibar (Gipuzkoa) Spain
Tfno.:(+34) 943 206744
Fax: (+34) 943 202757
Web: www.tekniker.es

Date	30/08/2022	2.0	29/08/2019	JOSE MANUEL				
Reviewed	F.LÓPEZ GARCIA	3.0	17/09/2019	JOSE MANUEL				
Drew by	JOSE MANUEL	Review	Date	Name	Review	Date	Name	

7186-GIS_LSST 7186

LSST Global Safety Interlock System Design

Replaces | Replaced by

Index :
=REPORT+GIS-M2CAM-CBT0101/1000.a -
=REPORT+GIS-PfAux-CBT0101/3001

Customer: EMPRESARIOS AGRUPADOS
C/Magallanes, 3
28015
3098000
http://www.empresariosagrupados.es/

= DOC
+ IND

Structure identifier overview

F24_001_tk01

Full designation	Structure description
=DOC	PROJECT DOCUMENTATION
=E1	MACHINE
=REPORT	REPORT
+IND	PROJECT INDEX
+BD	BLOCK DIAGRAM
+GIS-CPU-CBT0101	GIS CPU CABINET
+GIS-AcFiEa-CBT0101	GIS ACCESS FIRE EARTHQUAKE CABINET
+GIS-LASER-CBT0101	GIS LASER CONTROLER CABINET
+GIS-M2CAM-CBT0101	GIS M2 CAMERA CABINET
+GIS-PfAux-CBT0101	GIS Pflow & Auxiliary control CABINET
+ACC-CS-CBT-0101	ACCES CONTROL SYSTEM CABINET
+EART-CS-CBT-0101	EARTHQUAKE CONTROL SYSTEM CABINET
+FIRE-CS-CBT-0101	SUMMIT FIRE CONTROLLER CABINET
+LASER-CS-CBT-0101	LASER CONTROLLER CABINET
+M2A-CS-CBT-0101	M2 ACTUATOR CONTROL CABINET
+M2H-CS-CBT-0101	M2 HEXAPOD CONTROL CABINET
+CAMR-CS-CBT-0101	CAMERA ROTATOR CONTROL CABINET
+CAMH-CS-CBT-0101	CAMERA HEXAPOD CONTROL CABINET
+PfAux-CS-CBT-0101	Pflow & AUXILIARY CONTROL CABINET
+GIS-M1M3	GIS M1 M3 CONTROL
+DOME-IS	DOME IS
+AUX-IS	AUXILIARY TELESCOPE
+TMA-PI-CS-CBT-0101	AUXILIARY AZIMUTH CABLE WRAP BOX PIER
+GIS-CS	GIS CONTROL SYSTEM
+TCS	TELESCOPE CONTROL SYSTEM

Codigo identificacion de Abreviaturas para los colores de cables

Línea	Código de color	Nombre de color	Color en el espacio
1	BK		
2	BN		
3	RD		
4	OG		
5	YE		
6	GN		
7	BU		
8	VT		
9	GY		
10	WH		
11	PK		
12	GD		
13	TQ		
14	SR		
15	GNYE		

IEC81346
Industrial systems, installations and equipment and industrial products
Structuring principles and reference designations
Part 2: Classification of objects and codes for classes

IEC61082
Preparation of documents used in electrotechnology
Part 1: Rules

IEC61355
Classification and designation of documents for plants, systems and equipment
Part 1: Rules and classification tables

Customer

EMPRESARIOS AGRUPADOS

EMPRESARIOS AGRUPADOS

C/Magallanes, 3
28015
ESPAÑA
3098000

http://www.empresariosagrupados.es/

Project:

7186-GIS_LSST
7186
LSST Global Safety Interlock System Design

DOC
PROJECT DOCUMENTATION

BD
BLOCK DIAGRAM

Number of pages: 178

Made by:

IK4 TEKNIKER
Research Alliance

IK4-TEKNIKER

AVDA. OTAOLA 20
20600 Eibar (Gipuzkoa) Spain
Tfno. : (+34) 943 206744
Fax : (+34) 943 202757
Web: www.tekniker.es

Review	Review description	Date	Reviewed
2.0	CHILE ASEMBLY	29/08/2019	JOSE MANUEL
3.0	CHILE ASEMBLY (Specific cabinets for M2CAM & PfAux)	17/09/2019	JOSE MANUEL

Drew by: J.M.CASTAÑO
Reviewed: F.LÓPEZ GARCIA
Date: 04/05/2017
Replaces:
Replaced by:

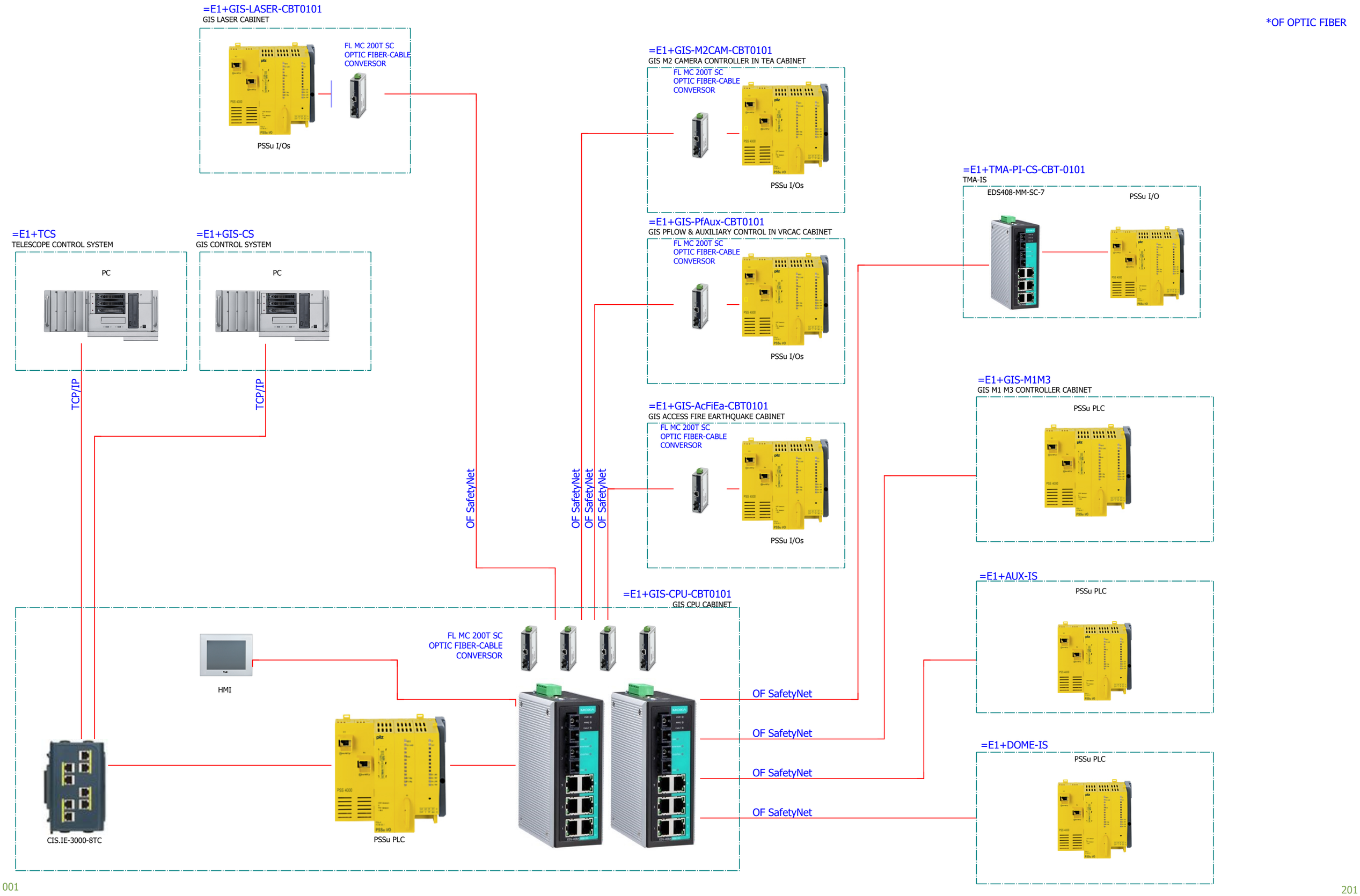

IK4 TEKNIKER Research Alliance
IK4-TEKNIKER
AVDA. OTAOLA 20
20600 Eibar (Gipuzkoa) Spain
Tfno.:(+34) 943 206744
Fax: (+34) 943 202757
Web: www.tekniker.es

Date	30/08/2022	2.0	29/08/2019	JOSE MANUEL				
Reviewed	F.LÓPEZ GARCIA	3.0	17/09/2019	JOSE MANUEL				
Drew by	JOSE MANUEL	Review	Date	Name	Review	Date	Name	

7186-GIS_LSST 7186
LSST Global Safety Interlock System Design

Replaces | Replaced by

TOTAL ISS BLOCK DIAGRAM

Customer: EMPRESARIOS AGRUPADOS
C/Magallanes, 3
28015
3098000
http://www.empresariosagrupados.es/

= DOC
+ BD

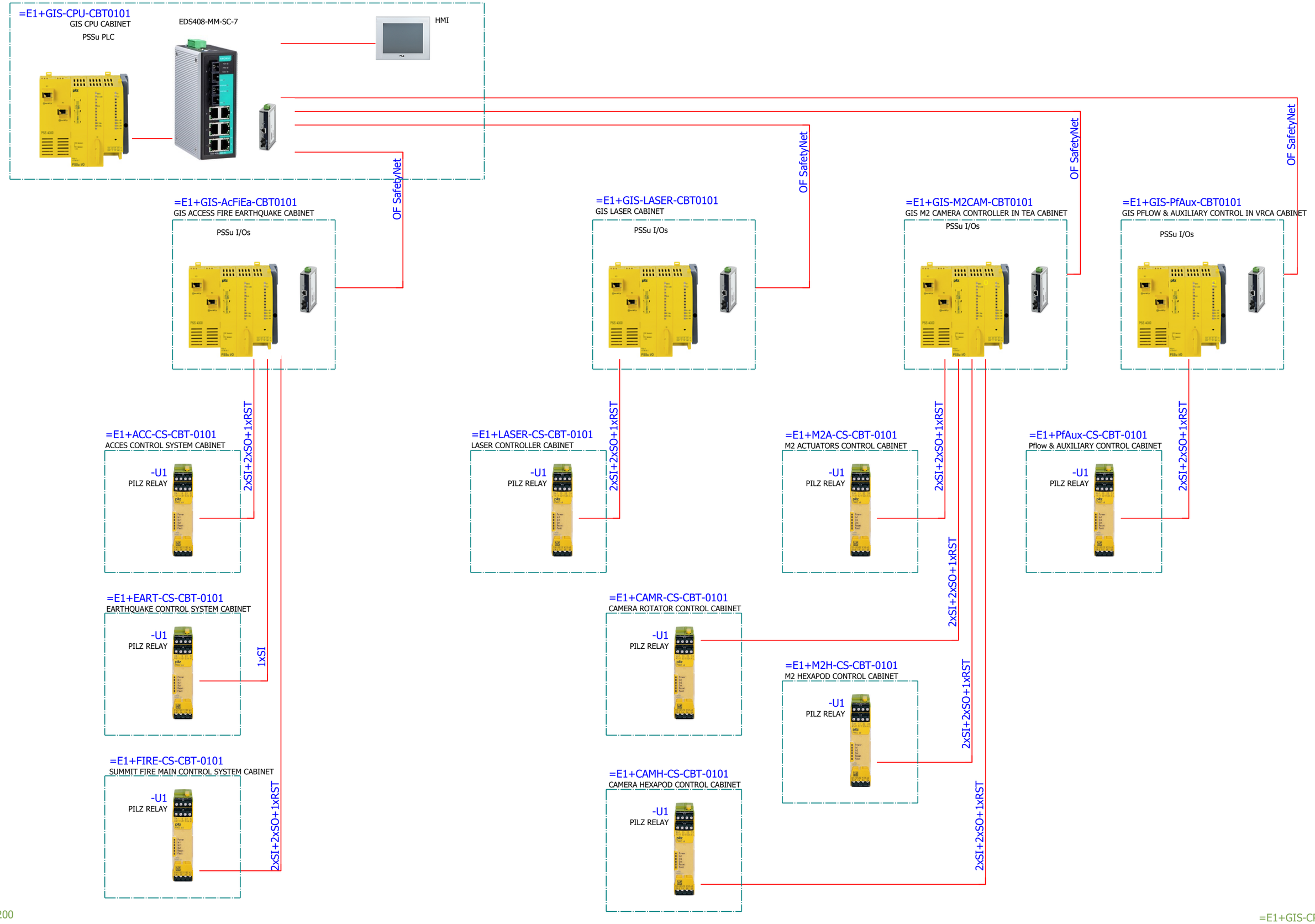

IK4 TEKNIKER Research Alliance
IK4-TEKNIKER
AVDA. OTAOLA 20
20600 Eibar (Gipuzkoa) Spain
Tfno.:(+34) 943 206744
Fax: (+34) 943 202757
Web: www.tekniker.es

Date	30/08/2022	2.0	29/08/2019	JOSE MANUEL				
Reviewed	F.LÓPEZ GARCIA	3.0	17/09/2019	JOSE MANUEL				
Drew by	JOSE MANUEL	Review	Date	Name	Review	Date	Name	

7186-GIS_LSST 7186
LSST Global Safety Interlock System Design

Replaces | Replaced by

GIS BLOCK DIAGRAM

Customer: EMPRESARIOS AGRUPADOS
C/Magallanes, 3
28015
3098000
http://www.empresariosagrupados.es/

= DOC
+ BD

Customer

EMPRESARIOS AGRUPADOS

EMPRESARIOS AGRUPADOS

C/Magallanes, 3
28015
ESPAÑA
3098000

http://www.empresariosagrupados.es/

Project:

7186-GIS_LSST

7186

LSST Global Safety Interlock System Design

E1
MACHINE

GIS-CPU-CBT0101
GIS CPU CABINET

Number of pages: 178

Made by:

IK4 TEKNIKER Research Alliance

IK4-TEKNIKER

AVDA. OTAOLA 20
20600 Eibar (Gipuzkoa) Spain
Tfno. : (+34) 943 206744
Fax : (+34) 943 202757
Web: www.tekniker.es

2.0	CHILE ASEMBLY	29/08/2019	JOSE MANUEL
3.0	CHILE ASEMBLY (Specific cabinets for M2CAM & PfAux)	17/09/2019	JOSE MANUEL
Review	Review description	Date	Reviewed

Drew by: J.M.CASTAÑO
Reviewed: F.LÓPEZ GARCIA
Date: 04/05/2017
Replaces:
Replaced by:

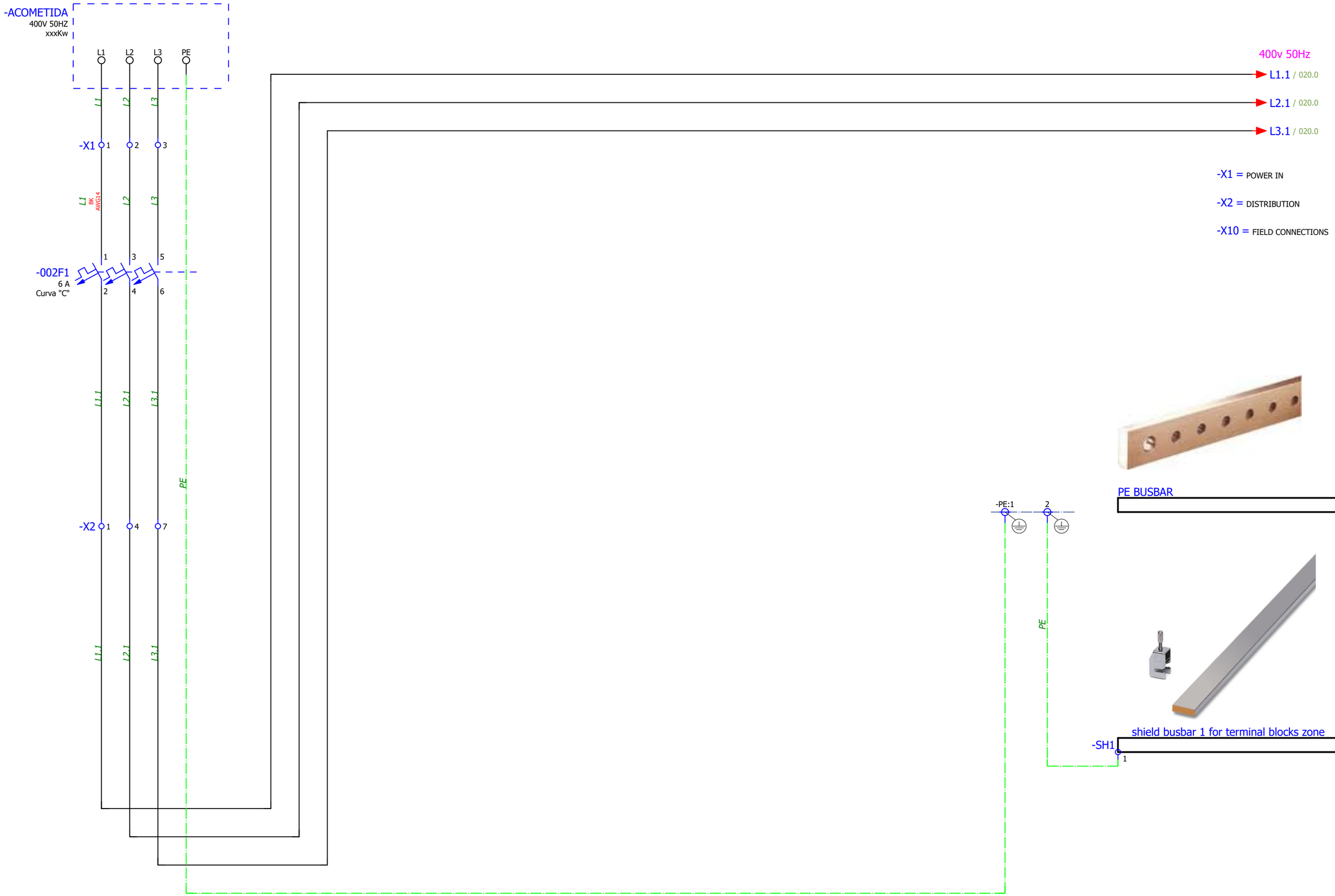

◁ 001

020 ▷

IK4 TEKNIKER Research Alliance
IK4-TEKNIKER
AVDA. OTAOLA 20
20600 Eibar (Gipuzkoa) Spain
Tfno.:(+34) 943 206744
Fax: (+34) 943 202757
Web: www.tekniker.es

Date	21/02/2018	2.0	29/08/2019	JOSE MANUEL				
Reviewed	F.LÓPEZ GARCIA	3.0	17/09/2019	JOSE MANUEL				
Drew by	JOSE MANUEL	Review	Date	Name	Review	Date	Name	

7186-GIS_LSST 7186

LSST Global Safety Interlock System Design

Replaces | Replaced by

POWER

Customer: EMPRESARIOS AGRUPADOS
C/Magallanes, 3
28015
3098000
http://www.empresariosagrupados.es/

= E1
+ GIS-CPU-CBT0101

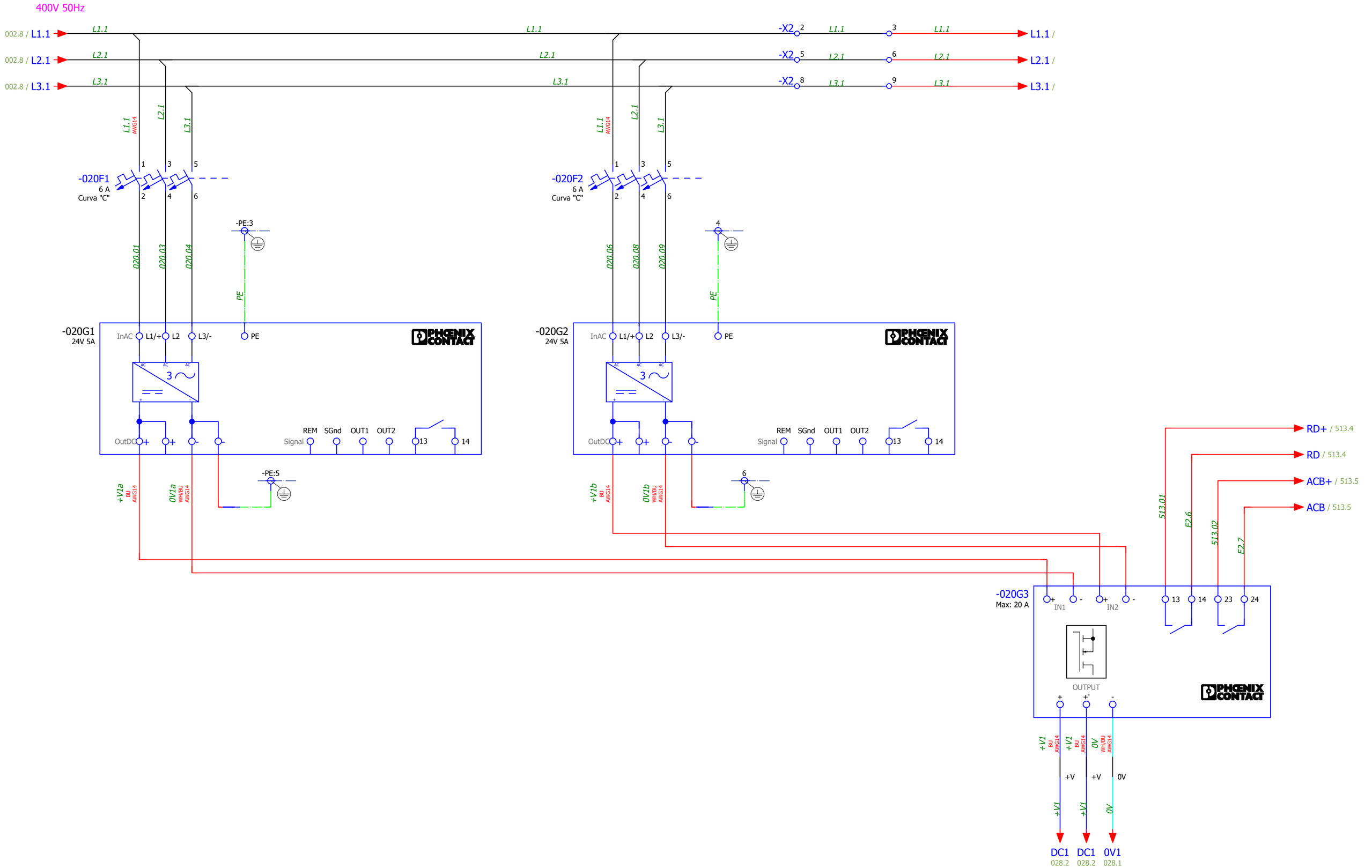

IK4 TEKNIKER Research Alliance

IK4-TEKNIKER
AVDA. OTAOLA 20
20600 Eibar (Gipuzkoa) Spain
Tfno.:(+34) 943 206744
Fax: (+34) 943 202757
Web: www.tekniker.es

Date	19/02/2018	2.0	29/08/2019	JOSE MANUEL			
Reviewed	F.LÓPEZ GARCIA	3.0	17/09/2019	JOSE MANUEL			
Drew by	JOSE MANUEL	Review	Date	Name	Review	Date	Name

7186-GIS_LSST 7186

LSST Global Safety Interlock System Design

Replaces | Replaced by

DC POWER

Customer: EMPRESARIOS AGRUPADOS
C/Magallanes, 3
28015
3098000
http://www.empresariosagrupados.es/

= E1
+ GIS-CPU-CBT0101

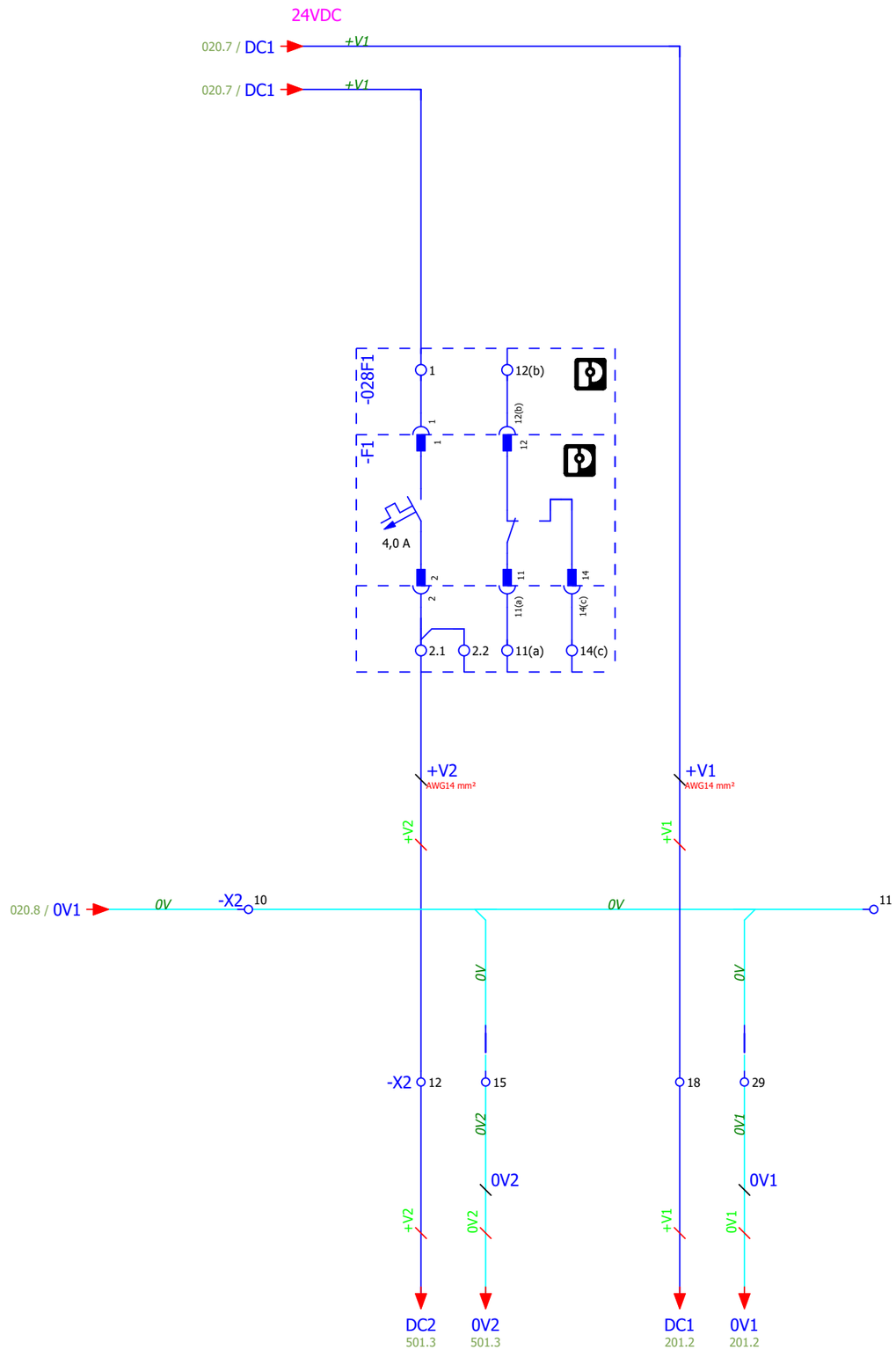

IK4 TEKNIKER Research Alliance

IK4-TEKNIKER
AVDA. OTAOLA 20
20600 Eibar (Gipuzkoa) Spain
Tfno.:(+34) 943 206744
Fax: (+34) 943 202757
Web: www.tekniker.es

Date	30/08/2022	2.0	29/08/2019	JOSE MANUEL			
Reviewed	F.LÓPEZ GARCIA	3.0	17/09/2019	JOSE MANUEL			
Drew by	JOSE MANUEL	Review	Date	Name	Review	Date	Name

7186-GIS_LSST 7186

LSST Global Safety Interlock System Design

Replaces | Replaced by

DC DISTRIBUTION

Customer: EMPRESARIOS AGRUPADOS
C/Magallanes, 3
28015
3098000
http://www.empresariosagrupados.es/

= E1
+ GIS-CPU-CBT0101

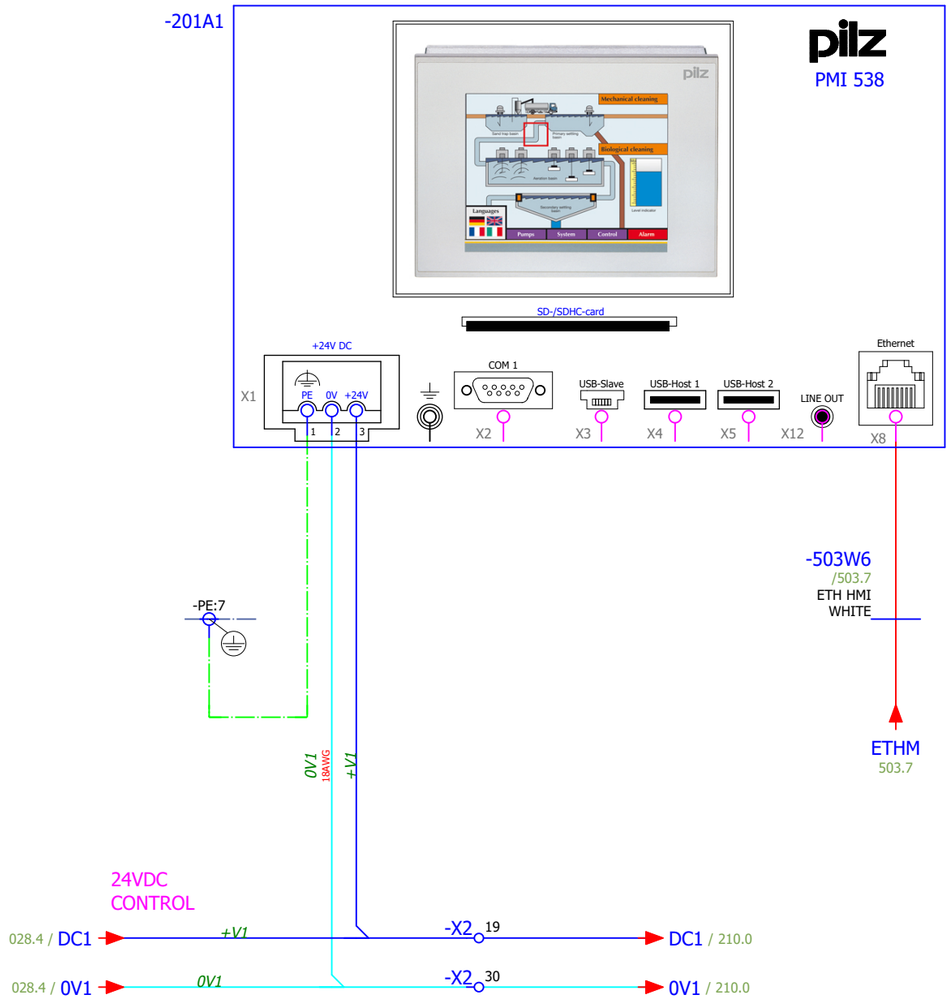

IK4 TEKNIKER Research Alliance

IK4-TEKNIKER
AVDA. OTAOLA 20
20600 Eibar (Gipuzkoa) Spain
Tfno.:(+34) 943 206744
Fax: (+34) 943 202757
Web: www.tekniker.es

Date	29/08/2019	2.0	29/08/2019	JOSE MANUEL				
Reviewed	F.LÓPEZ GARCIA	3.0	17/09/2019	JOSE MANUEL				
Drew by	JOSE MANUEL	Review	Date	Name	Review	Date	Name	

7186-GIS_LSST 7186

LSST Global Safety Interlock System Design

Replaces | Replaced by

HMI

Customer: EMPRESARIOS AGRUPADOS
C/Magallanes, 3
28015
3098000
http://www.empresariosagrupados.es/

= E1
+ GIS-CPU-CBT0101

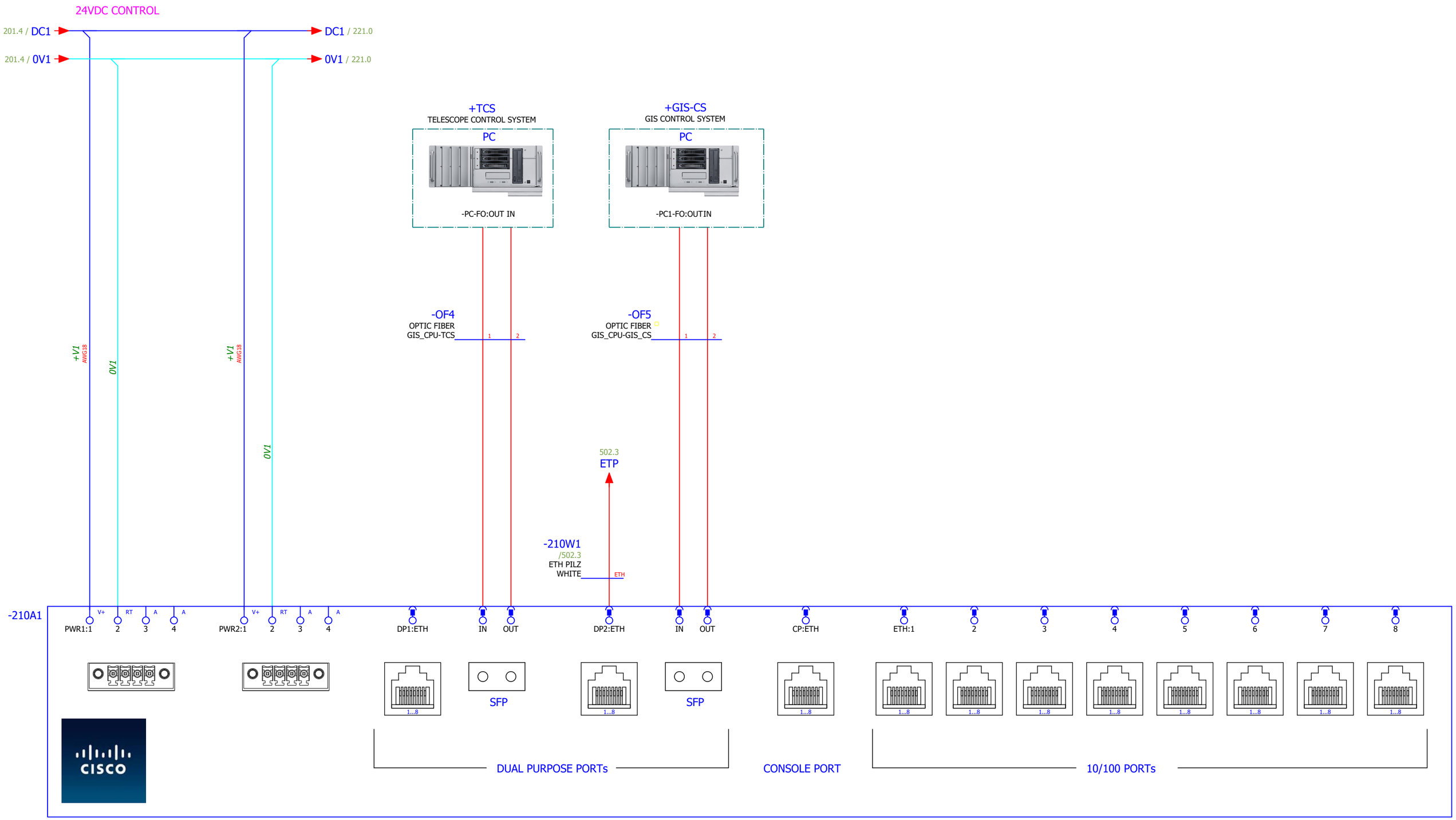

◁ 201

221 ▷

IK4-TEKNIKER
AVDA. OTAOLA 20
20600 Eibar (Gipuzkoa) Spain
Tfno.:(+34) 943 206744
Fax: (+34) 943 202757
Web: www.tekniker.es

Date	30/08/2022	2.0	29/08/2019	JOSE MANUEL			
Reviewed	F.LÓPEZ GARCIA	3.0	17/09/2019	JOSE MANUEL			
Drew by	JOSE MANUEL	Review	Date	Name	Review	Date	Name

7186-GIS_LSST 7186

LSST Global Safety Interlock System Design

Replaces | Replaced by

ETHERNET SWITCH

Customer: EMPRESARIOS AGRUPADOS
C/Magallanes, 3
28015
3098000
http://www.empresariosagrupados.es/

= E1
+ GIS-CPU-CBT0101

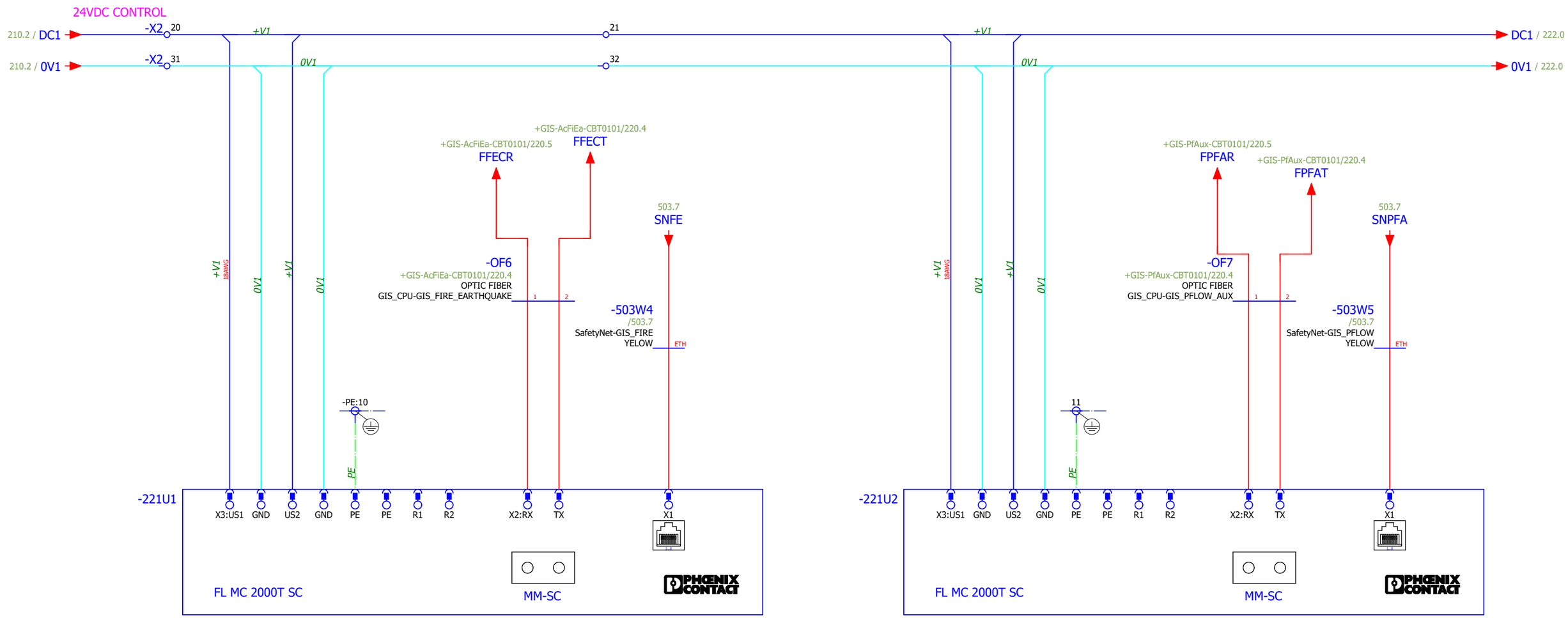

OPTIC FIBER GIS-CPU TO GIS-FIRE_EARTHQUAKE

OPTIC FIBER GIS-CPU TO GIS-PFLOW & AUXILIARY

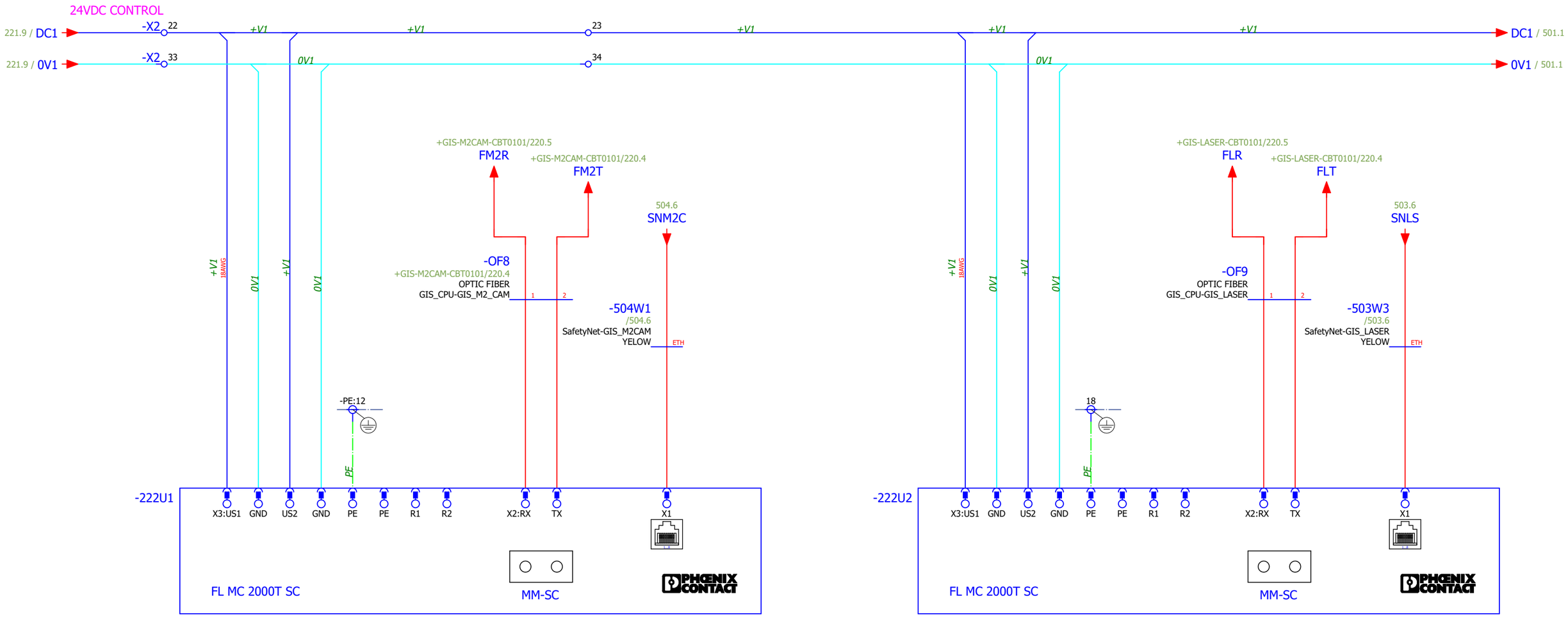

OPTIC FIBER GIS-CPU TO GIS-M2_CAMERA

OPTIC FIBER GIS-CPU TO GIS-LASER

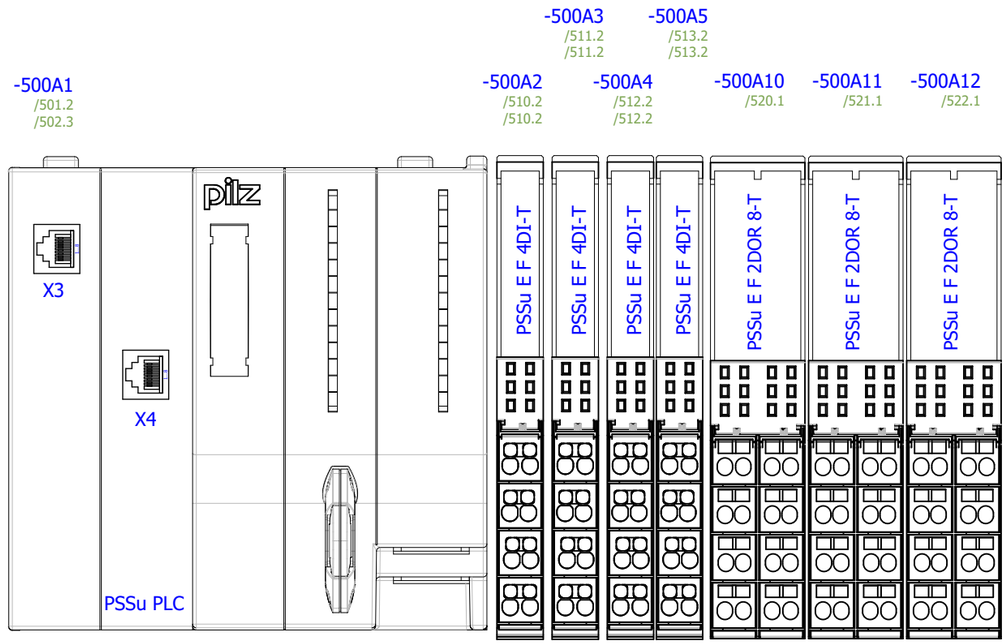

IK4 TEKNIKER Research Alliance

IK4-TEKNIKER
AVDA. OTAOLA 20
20600 Eibar (Gipuzkoa) Spain
Tfno.:(+34) 943 206744
Fax: (+34) 943 202757
Web: www.tekniker.es

Date	21/02/2018	2.0	29/08/2019	JOSE MANUEL				
Reviewed	F.LÓPEZ GARCIA	3.0	17/09/2019	JOSE MANUEL				
Drew by	JOSE MANUEL	Review	Date	Name	Review	Date	Name	

7186-GIS_LSST 7186

LSST Global Safety Interlock System Design

Replaces | Replaced by

EMERGENCY PLC PSSuniversal

Customer: EMPRESARIOS AGRUPADOS
C/Magallanes, 3
28015
3098000
http://www.empresariosagrupados.es/

= E1
+ GIS-CPU-CBT0101

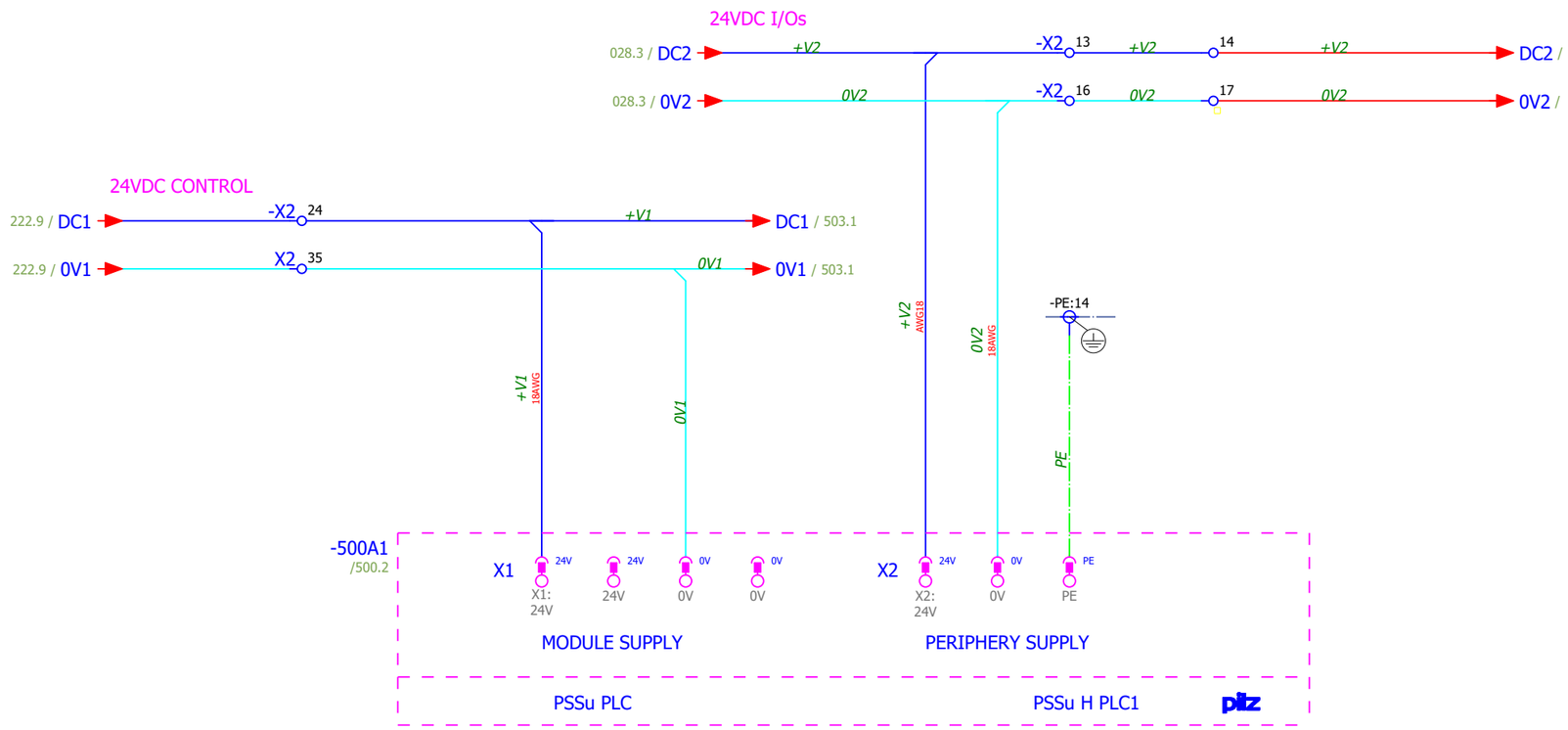

IK4 TEKNIKER Research Alliance
IK4-TEKNIKER
AVDA. OTAOLA 20
20600 Eibar (Gipuzkoa) Spain
Tfno.:(+34) 943 206744
Fax: (+34) 943 202757
Web: www.tekniker.es

Date	30/08/2022	2.0	29/08/2019	JOSE MANUEL				
Reviewed	F.LÓPEZ GARCIA	3.0	17/09/2019	JOSE MANUEL				
Drew by	JOSE MANUEL	Review	Date	Name	Review	Date	Name	

7186-GIS_LSST 7186
LSST Global Safety Interlock System Design

Replaces | Replaced by

POWER PSSu

Customer: EMPRESARIOS AGRUPADOS
C/Magallanes, 3
28015
3098000
http://www.empresariosagrupados.es/

= E1
+ GIS-CPU-CBT0101

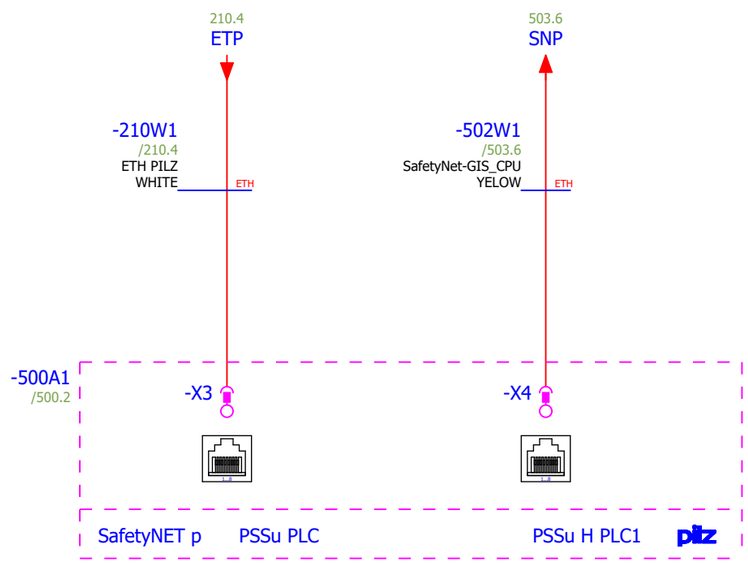

◁ 501

503 ▷

IK4 TEKNIKER Research Alliance
IK4-TEKNIKER
AVDA. OTAOLA 20
20600 Eibar (Gipuzkoa) Spain
Tfno.:(+34) 943 206744
Fax: (+34) 943 202757
Web: www.tekniker.es

Date	12/02/2018	2.0	29/08/2019	JOSE MANUEL				
Reviewed	F.LÓPEZ GARCIA	3.0	17/09/2019	JOSE MANUEL				
Drew by	JOSE MANUEL	Review	Date	Name	Review	Date	Name	

7186-GIS_LSST 7186
LSST Global Safety Interlock System Design

Replaces | Replaced by

SAFETY NET CPU

Customer: EMPRESARIOS AGRUPADOS
C/Magallanes, 3
28015
3098000
http://www.empresariosagrupados.es/

= E1
+ GIS-CPU-CBT0101

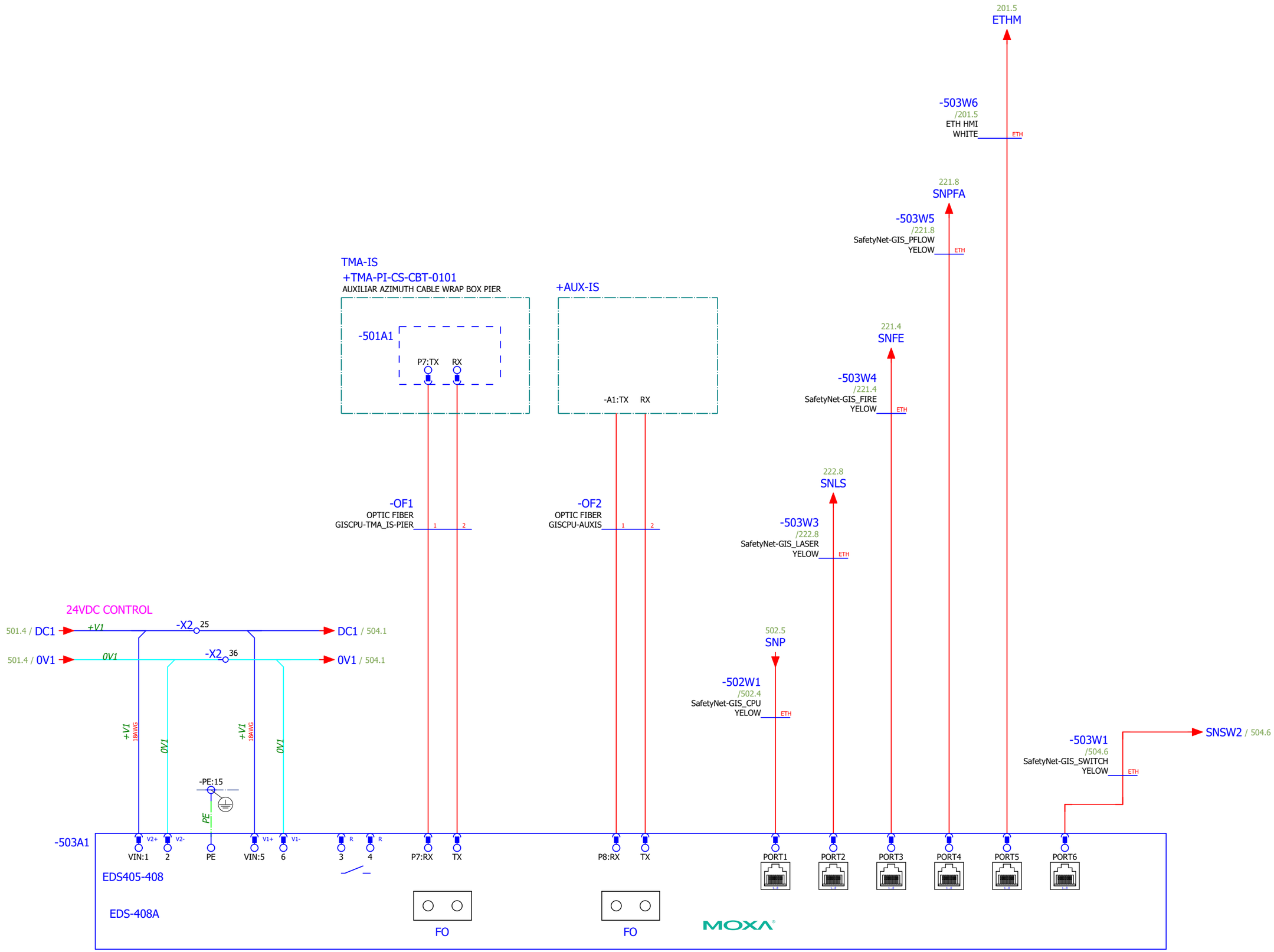

◁ 502

504 ▷

IK4 TEKNIKER Research Alliance
IK4-TEKNIKER
AVDA. OTAOLA 20
20600 Eibar (Gipuzkoa) Spain
Tfno.:(+34) 943 206744
Fax: (+34) 943 202757
Web: www.tekniker.es

Date	30/08/2022	2.0	29/08/2019	JOSE MANUEL				
Reviewed	F.LÓPEZ GARCIA	3.0	17/09/2019	JOSE MANUEL				
Drew by	JOSE MANUEL	Review	Date	Name	Review	Date	Name	

7186-GIS_LSST
LSST Global Safety Interlock System Design
7186

Replaces | Replaced by

SAFETY NET SWITCH 1

Customer: EMPRESARIOS AGRUPADOS
C/Magallanes, 3
28015
3098000
http://www.empresariosagrupados.es/

= E1
+ GIS-CPU-CBT0101

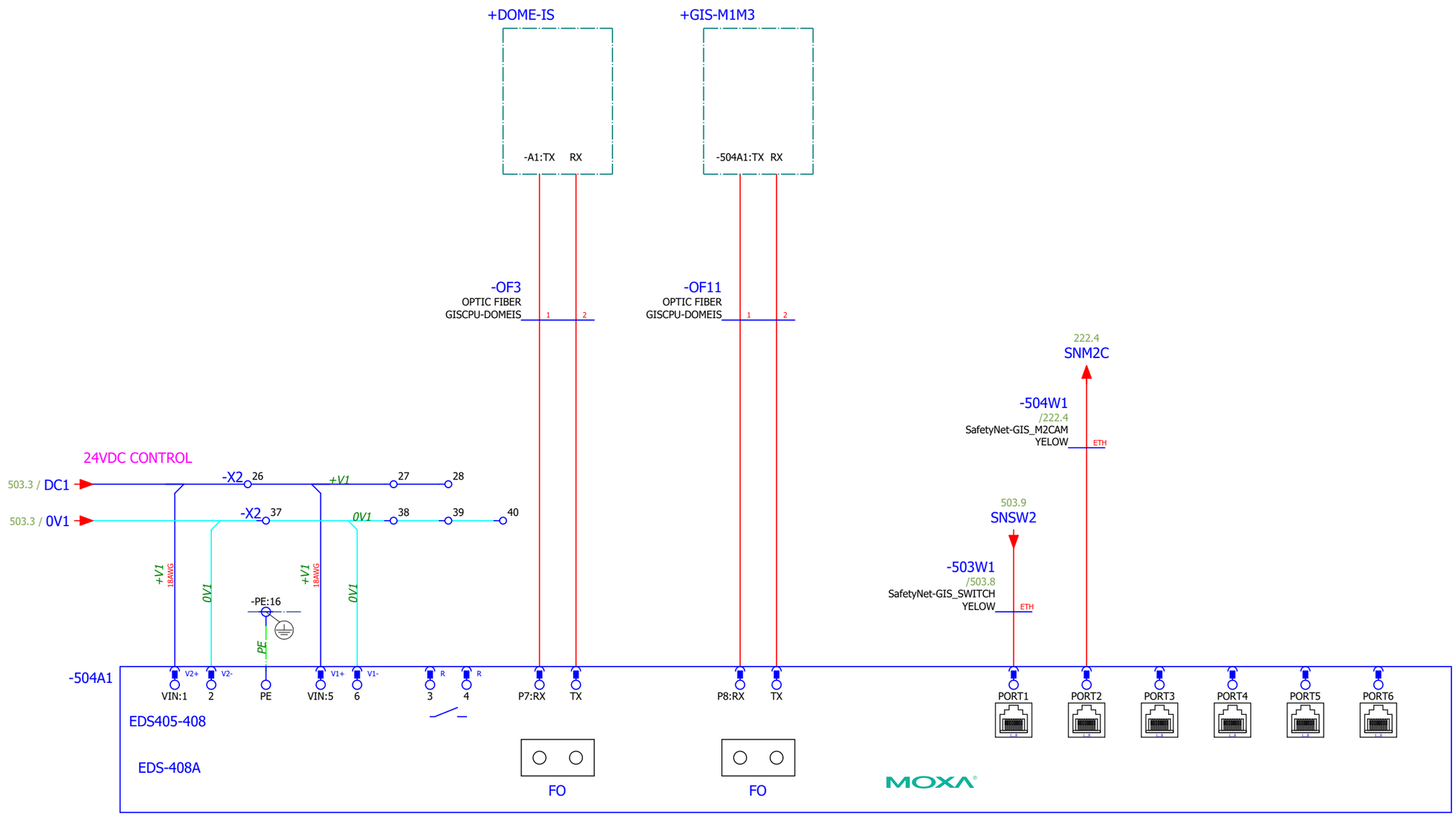

IK4 TEKNIKER
Research Alliance

IK4-TEKNIKER
AVDA. OTAOLA 20
20600 Eibar (Gipuzkoa) Spain
Tfno.:(+34) 943 206744
Fax: (+34) 943 202757
Web: www.tekniker.es

Date	28/08/2019	2.0	29/08/2019	JOSE MANUEL				
Reviewed	F.LÓPEZ GARCIA	3.0	17/09/2019	JOSE MANUEL				
Drew by	JOSE MANUEL	Review	Date	Name	Review	Date	Name	

7186-GIS_LSST 7186

LSST Global Safety Interlock System Design

Replaces | Replaced by

SAFETY NET SWITCH 1

Customer: EMPRESARIOS AGRUPADOS
C/Magallanes, 3
28015
3098000
http://www.empresariosagrupados.es/

= E1
+ GIS-CPU-CBT0101

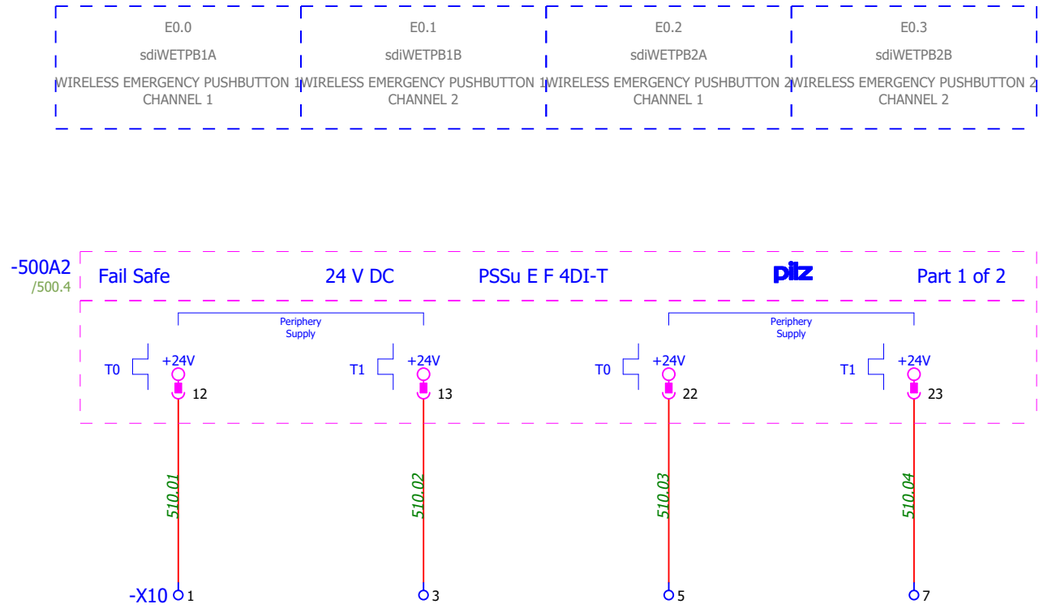

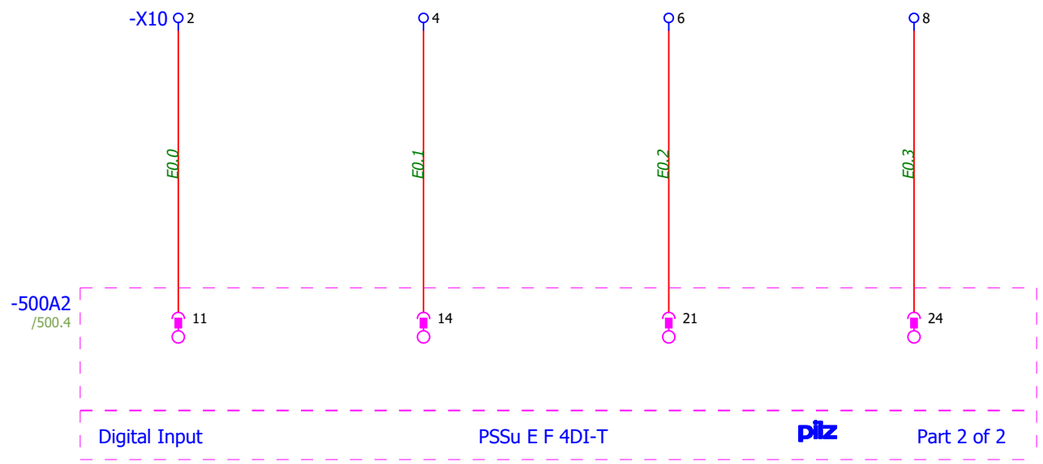

◁ 504

511 ▷

IK4 TEKNIKER Research Alliance
IK4-TEKNIKER
AVDA. OTAOLA 20
20600 Eibar (Gipuzkoa) Spain
Tfno.:(+34) 943 206744
Fax: (+34) 943 202757
Web: www.tekniker.es

Date	26/01/2018	2.0	29/08/2019	JOSE MANUEL			
Reviewed	F.LÓPEZ GARCIA	3.0	17/09/2019	JOSE MANUEL			
Drew by	JOSE MANUEL	Review	Date	Name	Review	Date	Name

7186-GIS_LSST 7186
LSST Global Safety Interlock System Design

Replaces | Replaced by

SAFETY DIGITAL INPUTS

Customer: EMPRESARIOS AGRUPADOS
C/Magallanes, 3
28015
3098000
http://www.empresariosagrupados.es/

= E1
+ GIS-CPU-CBT0101

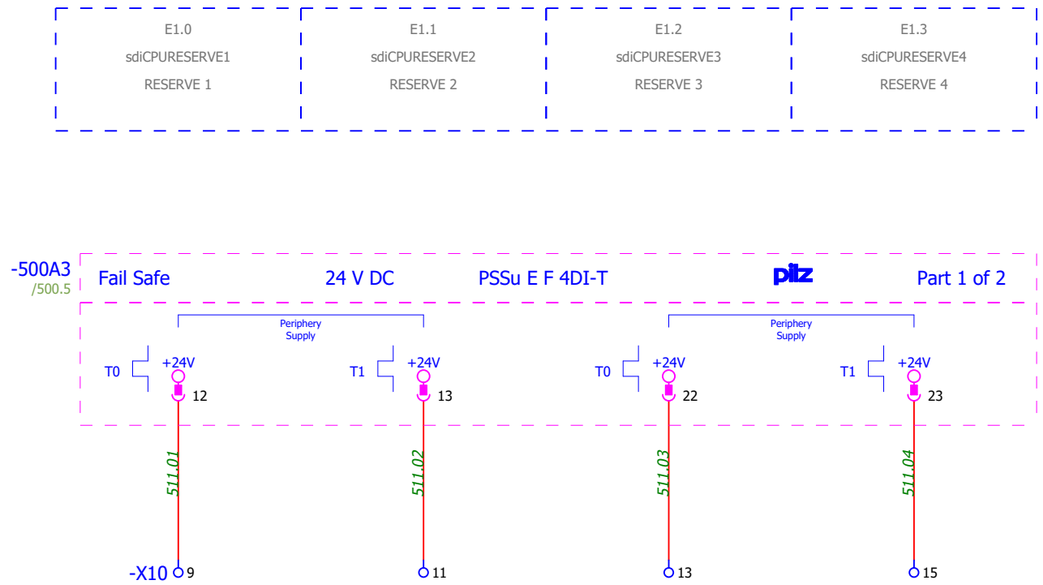
E1.0
sdiCPURESERVE1
RESERVE 1
E1.1
sdiCPURESERVE2
RESERVE 2
E1.2
sdiCPURESERVE3
RESERVE 3
E1.3
sdiCPURESERVE4
RESERVE 4
-500A3
/500.5
Fail Safe
24 V DC
PSSu E F 4DI-T
pilz
Part 1 of 2
Periphery Supply
Periphery Supply
T0
+24V
12
T1
+24V
13
T0
+24V
22
T1
+24V
23
511.01
511.02
511.03
511.04
-X10
9
11
13
15

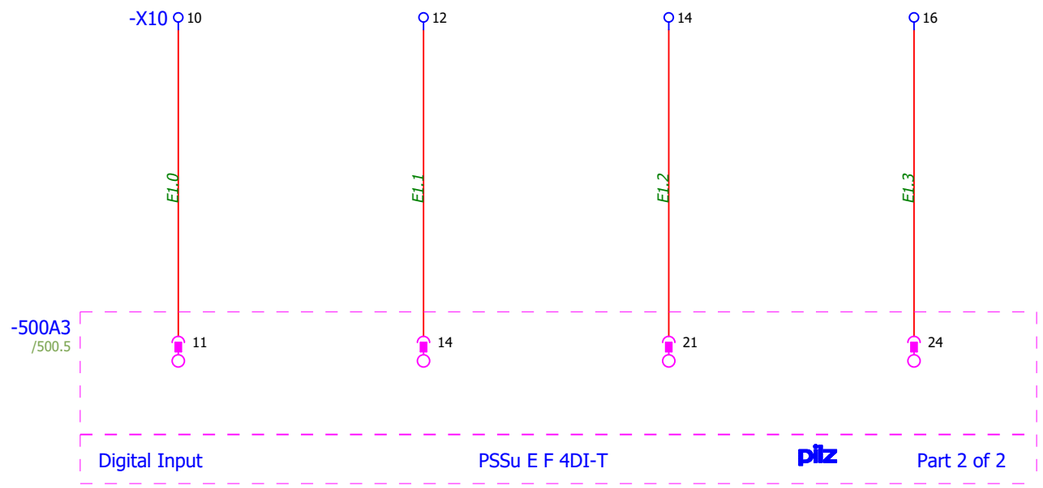
-X10
10
12
14
16
E1.0
E1.1
E1.2
E1.3
-500A3
/500.5
11
14
21
24
Digital Input
PSSu E F 4DI-T
pilz
Part 2 of 2

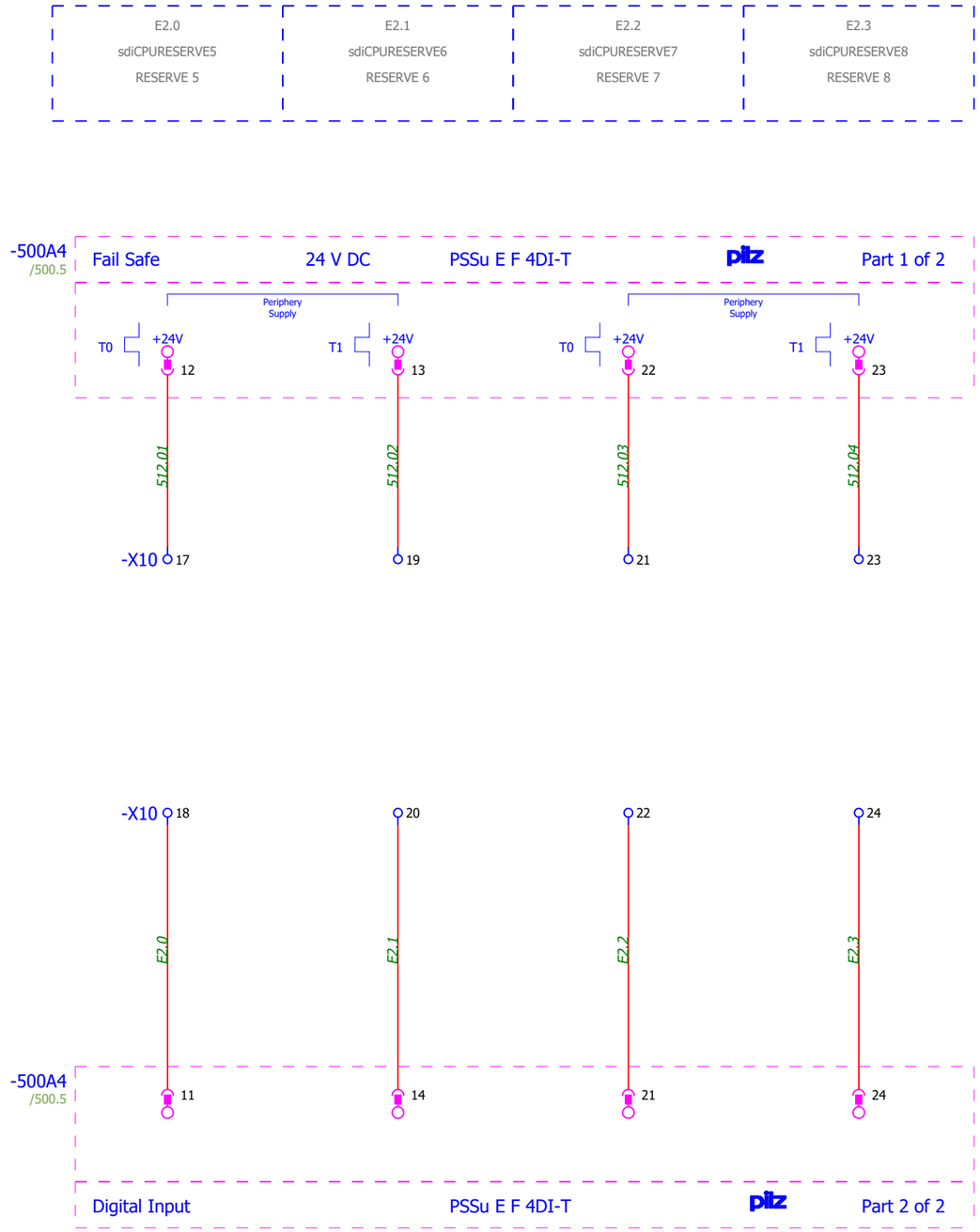

IK4 TEKNIKER Research Alliance

IK4-TEKNIKER
AVDA. OTAOLA 20
20600 Eibar (Gipuzkoa) Spain
Tfno.:(+34) 943 206744
Fax: (+34) 943 202757
Web: www.tekniker.es

Date	26/01/2018	2.0	29/08/2019	JOSE MANUEL			
Reviewed	F.LÓPEZ GARCIA	3.0	17/09/2019	JOSE MANUEL			
Drew by	JOSE MANUEL	Review	Date	Name	Review	Date	Name

7186-GIS_LSST 7186

LSST Global Safety Interlock System Design

Replaces | Replaced by

SAFETY DIGITAL INPUTS

Customer: EMPRESARIOS AGRUPADOS
C/Magallanes, 3
28015
3098000
http://www.empresariosagrupados.es/

= E1
+ GIS-CPU-CBT0101

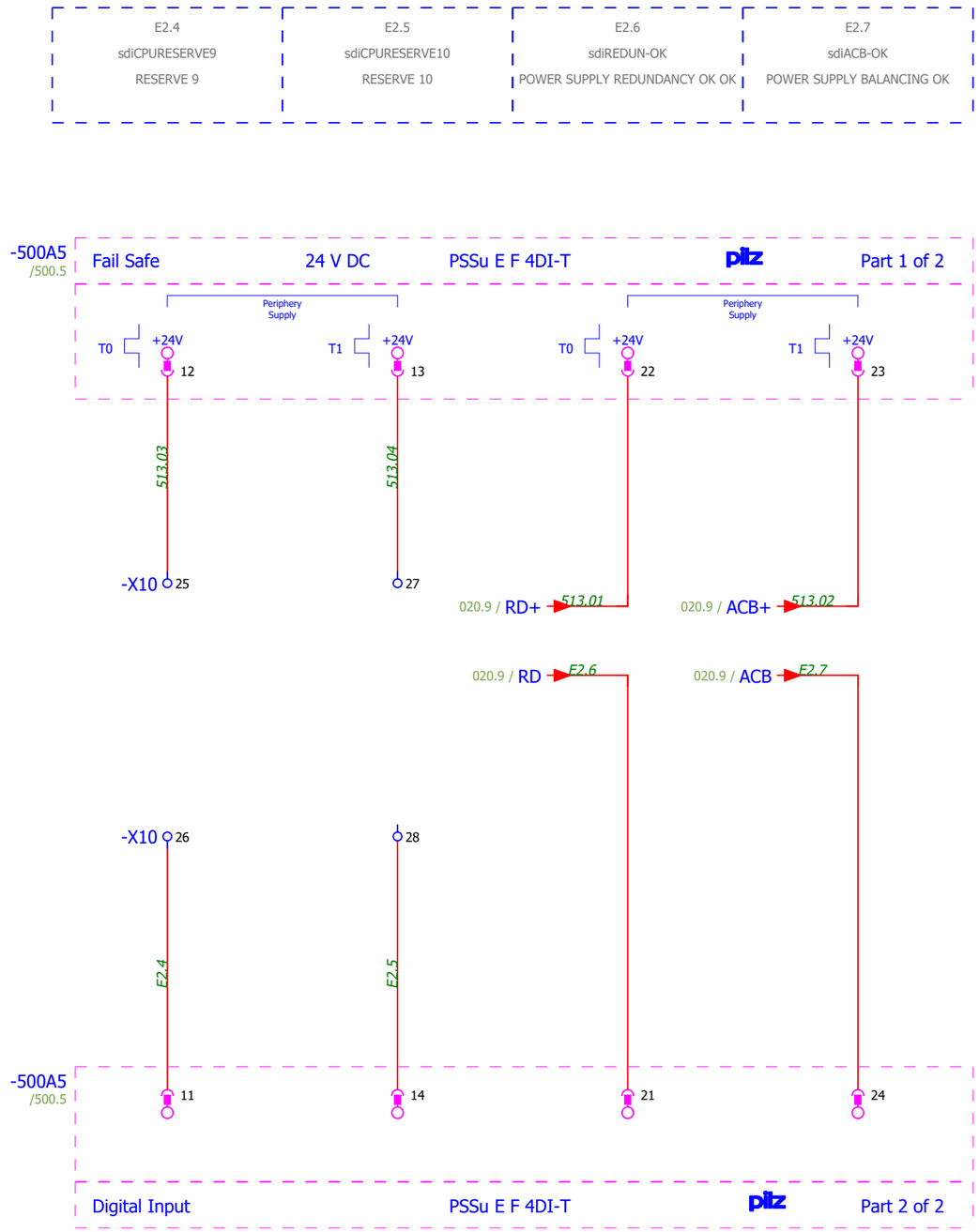

IK4 TEKNIKER Research Alliance

IK4-TEKNIKER
AVDA. OTAOLA 20
20600 Eibar (Gipuzkoa) Spain
Tfno.:(+34) 943 206744
Fax: (+34) 943 202757
Web: www.tekniker.es

Date	26/01/2018	2.0	29/08/2019	JOSE MANUEL			
Reviewed	F.LÓPEZ GARCIA	3.0	17/09/2019	JOSE MANUEL			
Drew by	JOSE MANUEL	Review	Date	Name	Review	Date	Name

7186-GIS_LSST 7186

LSST Global Safety Interlock System Design

Replaces | Replaced by

SAFETY DIGITAL INPUTS

Customer: EMPRESARIOS AGRUPADOS
C/Magallanes, 3
28015
3098000
http://www.empresariosagrupados.es/

= E1
+ GIS-CPU-CBT0101

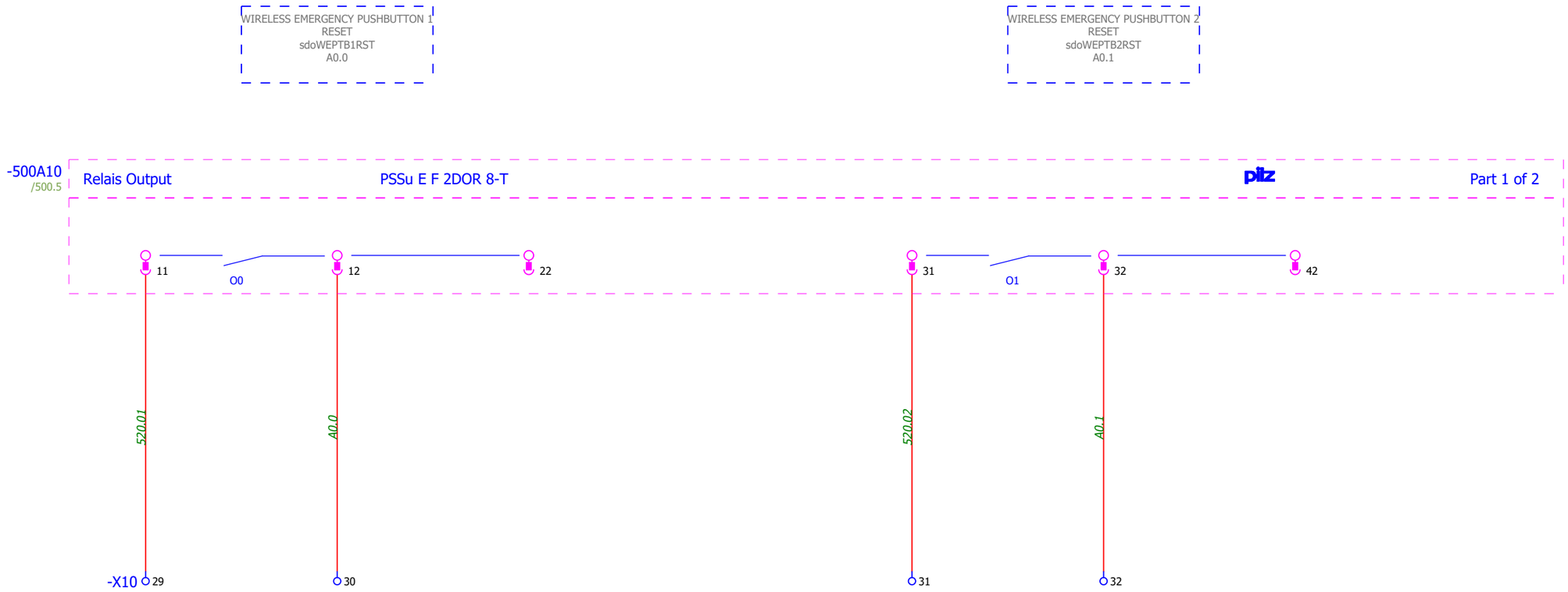

IK4 TEKNIKER Research Alliance

IK4-TEKNIKER
AVDA. OTAOLA 20
20600 Eibar (Gipuzkoa) Spain
Tfno.:(+34) 943 206744
Fax: (+34) 943 202757
Web: www.tekniker.es

Date	26/01/2018	2.0	29/08/2019	JOSE MANUEL				
Reviewed	F.LÓPEZ GARCIA	3.0	17/09/2019	JOSE MANUEL				
Drew by	JOSE MANUEL	Review	Date	Name	Review	Date	Name	

7186-GIS_LSST 7186

LSST Global Safety Interlock System Design

Replaces | Replaced by

SAFETY DIGITAL OUTPUTS

Customer: EMPRESARIOS AGRUPADOS
C/Magallanes, 3
28015
3098000
http://www.empresariosagrupados.es/

= E1
+ GIS-CPU-CBT0101

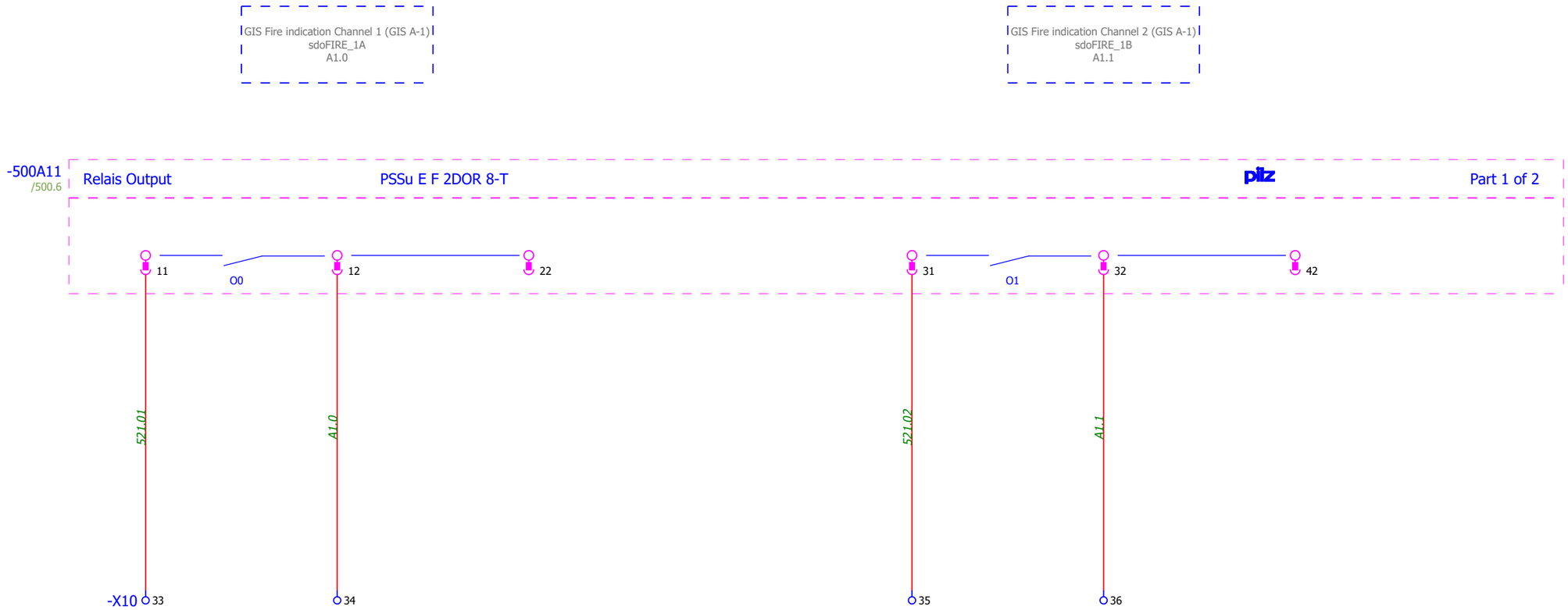

IK4 TEKNIKER Research Alliance

IK4-TEKNIKER
AVDA. OTAOLA 20
20600 Eibar (Gipuzkoa) Spain
Tfno.:(+34) 943 206744
Fax: (+34) 943 202757
Web: www.tekniker.es

Date	26/01/2018	2.0	29/08/2019	JOSE MANUEL				
Reviewed	F.LÓPEZ GARCIA	3.0	17/09/2019	JOSE MANUEL				
Drew by	JOSE MANUEL	Review	Date	Name	Review	Date	Name	

7186-GIS_LSST 7186

LSST Global Safety Interlock System Design

Replaces | Replaced by

SAFETY DIGITAL OUTPUTS

Customer: EMPRESARIOS AGRUPADOS

EMPRESARIOS AGRUPADOS
C/Magallanes, 3
28015
3098000

http://www.empresariosagrupados.es/

= E1

+ GIS-CPU-CBT0101

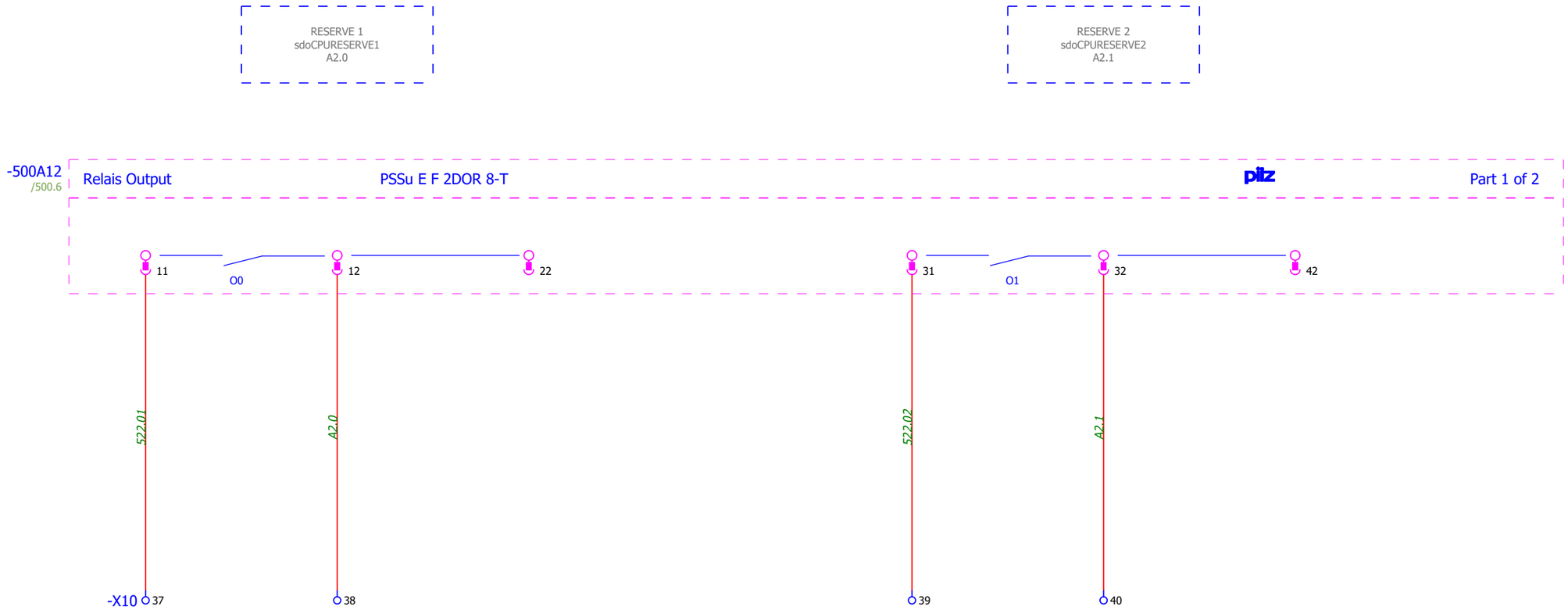

IK4 TEKNIKER Research Alliance
IK4-TEKNIKER
AVDA. OTAOLA 20
20600 Eibar (Gipuzkoa) Spain
Tfno.:(+34) 943 206744
Fax: (+34) 943 202757
Web: www.tekniker.es

Date	21/02/2018	2.0	29/08/2019	JOSE MANUEL			
Reviewed	F.LÓPEZ GARCIA	3.0	17/09/2019	JOSE MANUEL			
Drew by	JOSE MANUEL	Review	Date	Name	Review	Date	Name

7186-GIS_LSST 7186
LSST Global Safety Interlock System Design

Replaces | Replaced by

SAFETY DIGITAL OUTPUTS

Customer: EMPRESARIOS AGRUPADOS
C/Magallanes, 3
28015
3098000
http://www.empresariosagrupados.es/

= E1
+ GIS-CPU-CBT0101

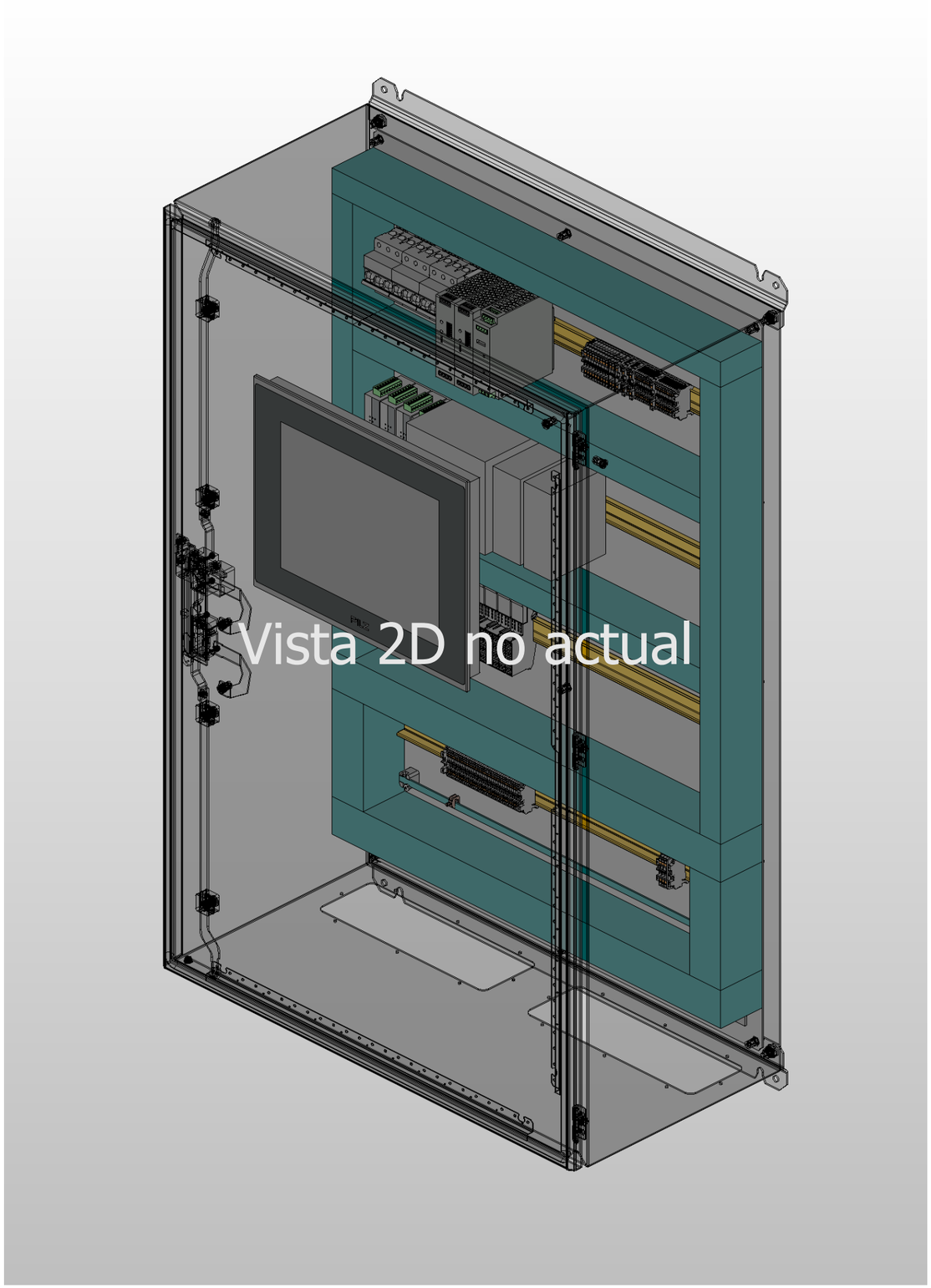
Vista 2D no actual

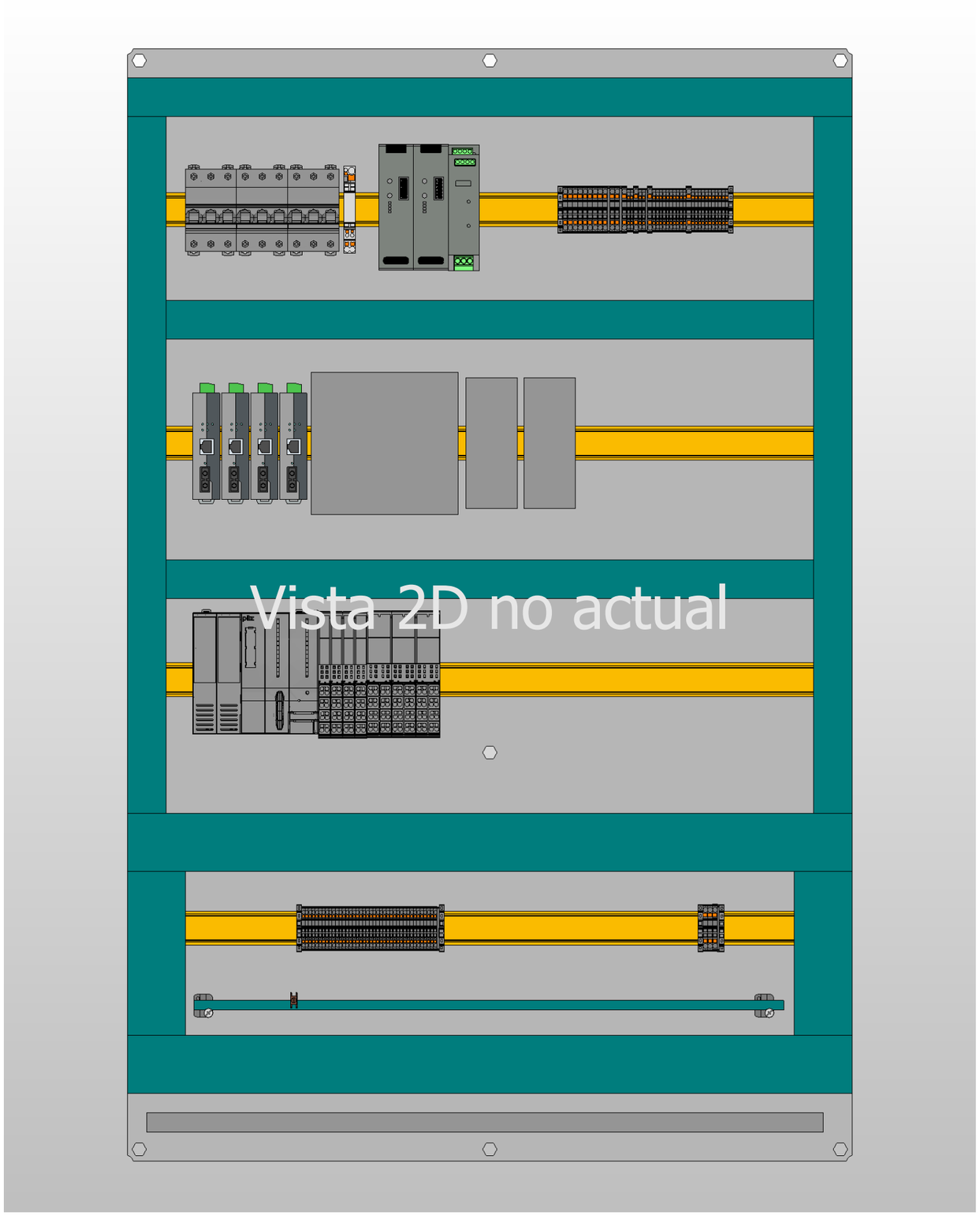
Vista 2D no actual

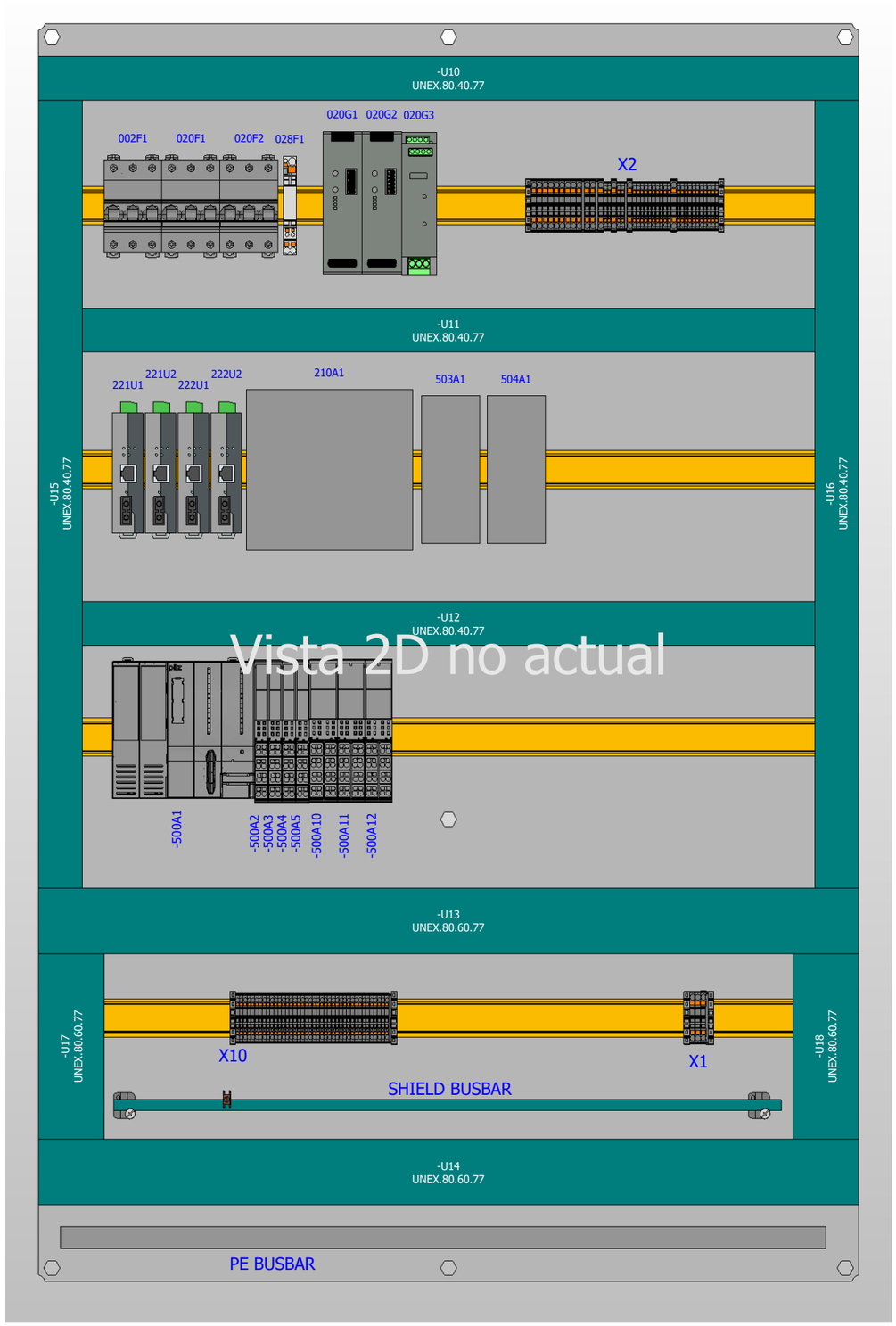
-U10
UNEX.80.40.77
002F1
020F1
020F2
028F1
020G1
020G2
020G3
X2
-U11
UNEX.80.40.77
221U1
221U2
222U1
222U2
210A1
503A1
504A1
-U15
UNEX.80.40.77
-U16
UNEX.80.40.77
-U12
UNEX.80.40.77
Vista 2D no actual
-500A1
-500A2
-500A3
-500A4
-500A5
-500A10
-500A11
-500A12
-U13
UNEX.80.60.77
-U17
UNEX.80.60.77
-U18
UNEX.80.60.77
X10
X1
SHIELD BUSBAR
-U14
UNEX.80.60.77
PE BUSBAR

X2

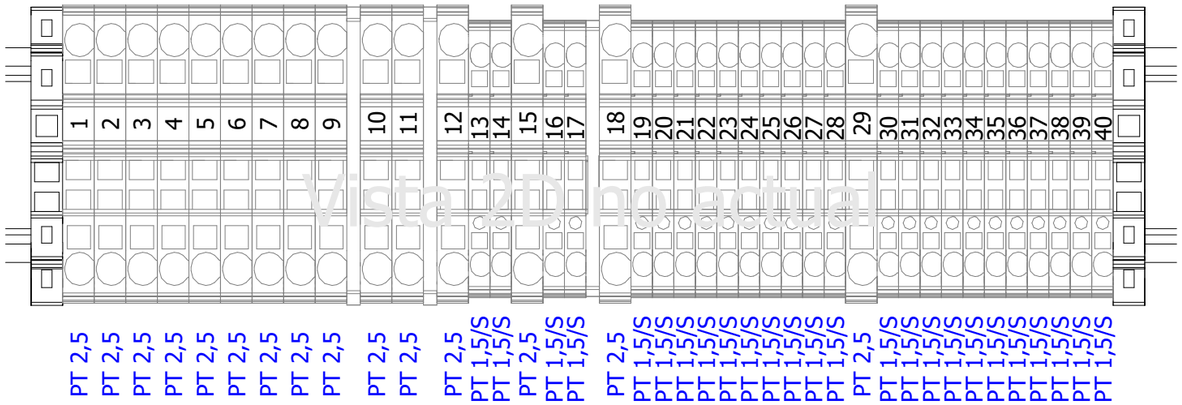
1 2 3 4 5 6 7 8 9 10 11 12 13 14 15 16 17 18 19 20 21 22 23 24 25 26 27 28 29 30 31 32 33 34 35 36 37 38 39 40
Vista 2D no actual
PT 2,5 PT 2,5 PT 2,5 PT 2,5 PT 2,5 PT 2,5 PT 2,5 PT 2,5 PT 2,5 PT 2,5 PT 2,5 PT 2,5 PT 1,5/S PT 1,5/S PT 2,5 PT 1,5/S PT 1,5/S PT 2,5 PT 1,5/S PT 1,5/S PT 1,5/S PT 1,5/S PT 1,5/S PT 1,5/S PT 1,5/S PT 1,5/S PT 1,5/S PT 1,5/S PT 2,5 PT 1,5/S PT 1,5/S PT 1,5/S PT 1,5/S PT 1,5/S PT 1,5/S PT 1,5/S PT 1,5/S PT 1,5/S PT 1,5/S

X10

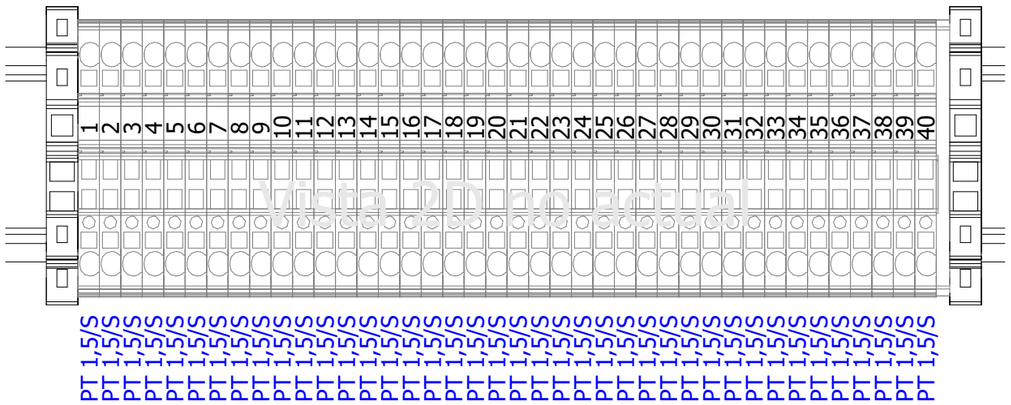
1 2 3 4 5 6 7 8 9 10 11 12 13 14 15 16 17 18 19 20 21 22 23 24 25 26 27 28 29 30 31 32 33 34 35 36 37 38 39 40
Vista 2D no actual

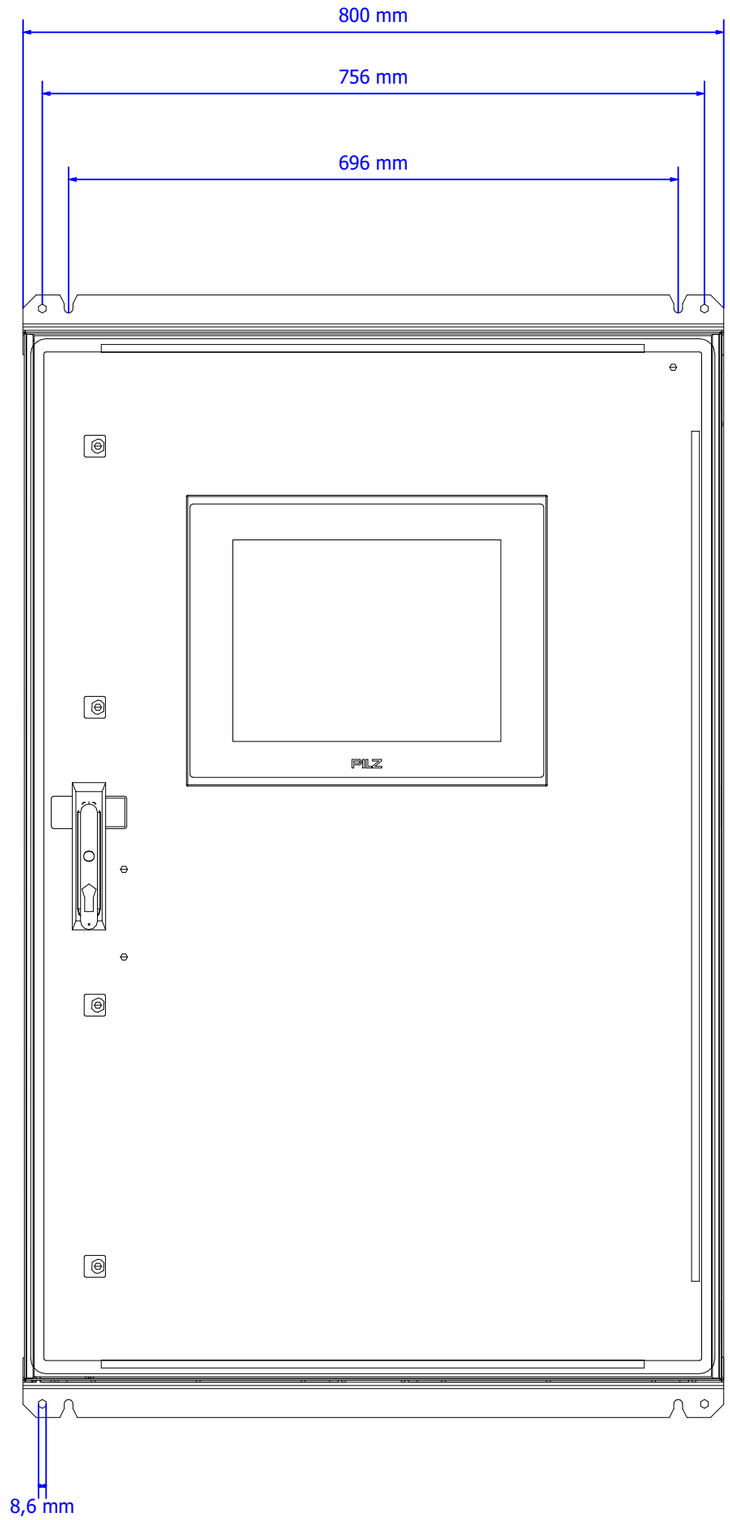

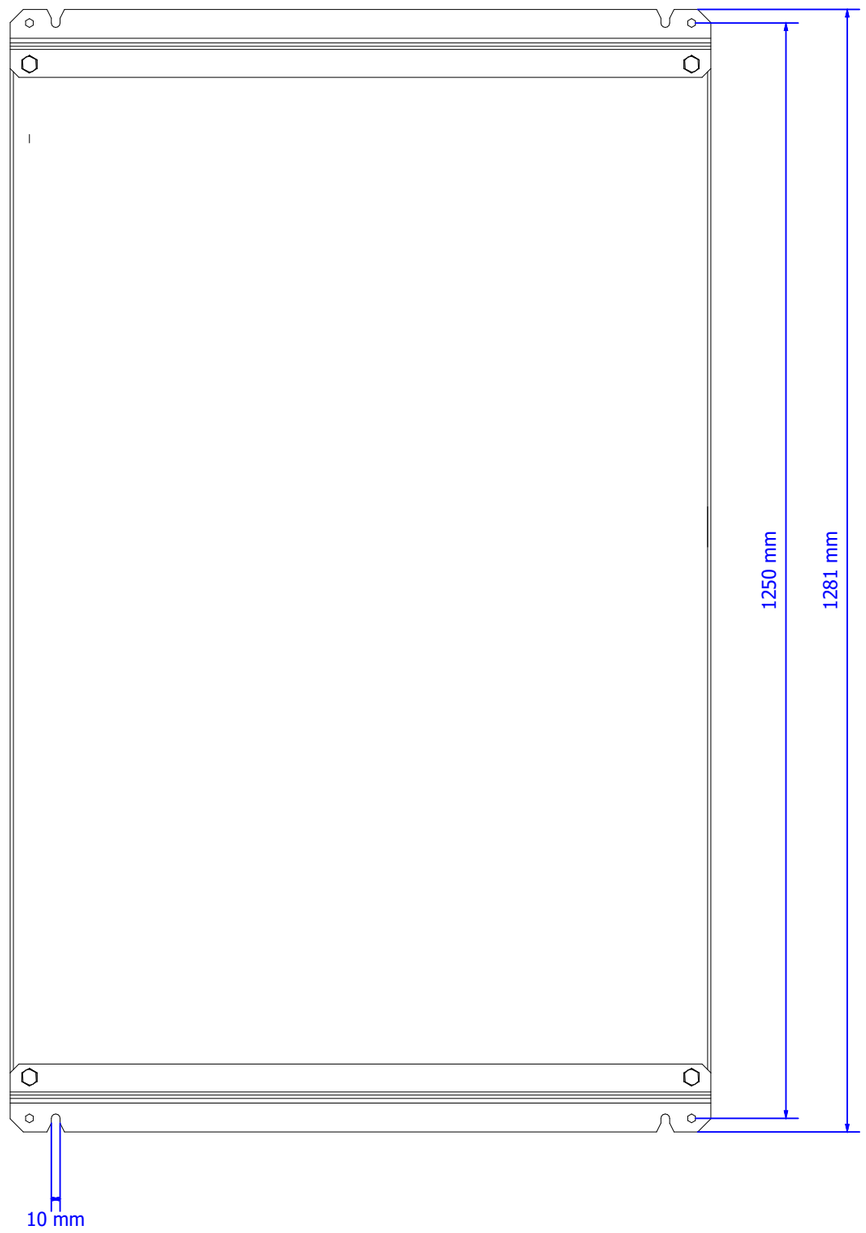

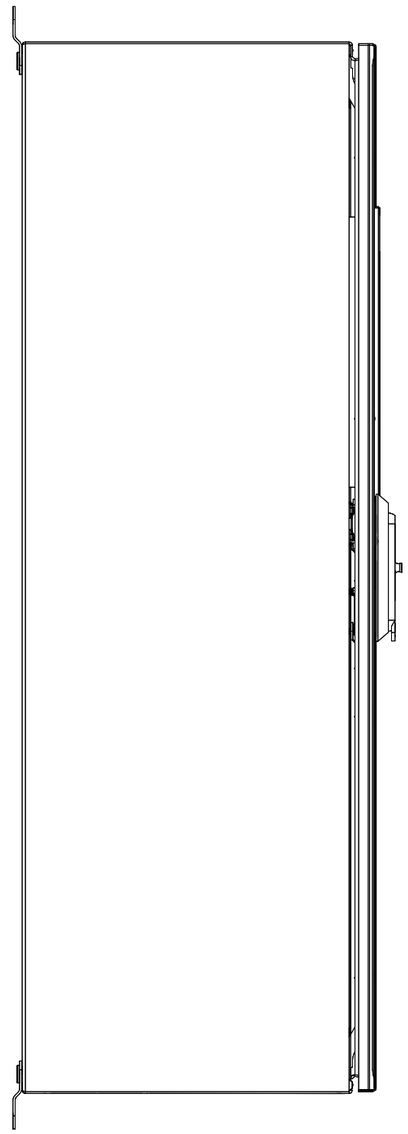

IK4 TEKNIKER Research Alliance

IK4-TEKNIKER
AVDA. OTAOLA 20
20600 Eibar (Gipuzkoa) Spain
Tfno.:(+34) 943 206744
Fax: (+34) 943 202757
Web: www.tekniker.es

Date	21/02/2018	2.0	29/08/2019	JOSE MANUEL			
Reviewed	F.LÓPEZ GARCIA	3.0	17/09/2019	JOSE MANUEL			
Drew by	JOSE MANUEL	Review	Date	Name	Review	Date	Name

7186-GIS_LSST 7186

LSST Global Safety Interlock System Design

Replaces | Replaced by

CABINET DIMENSIONS

Customer: EMPRESARIOS AGRUPADOS
C/Magallanes, 3
28015
3098000
http://www.empresariosagrupados.es/

= E1
+ GIS-CPU-CBT0101

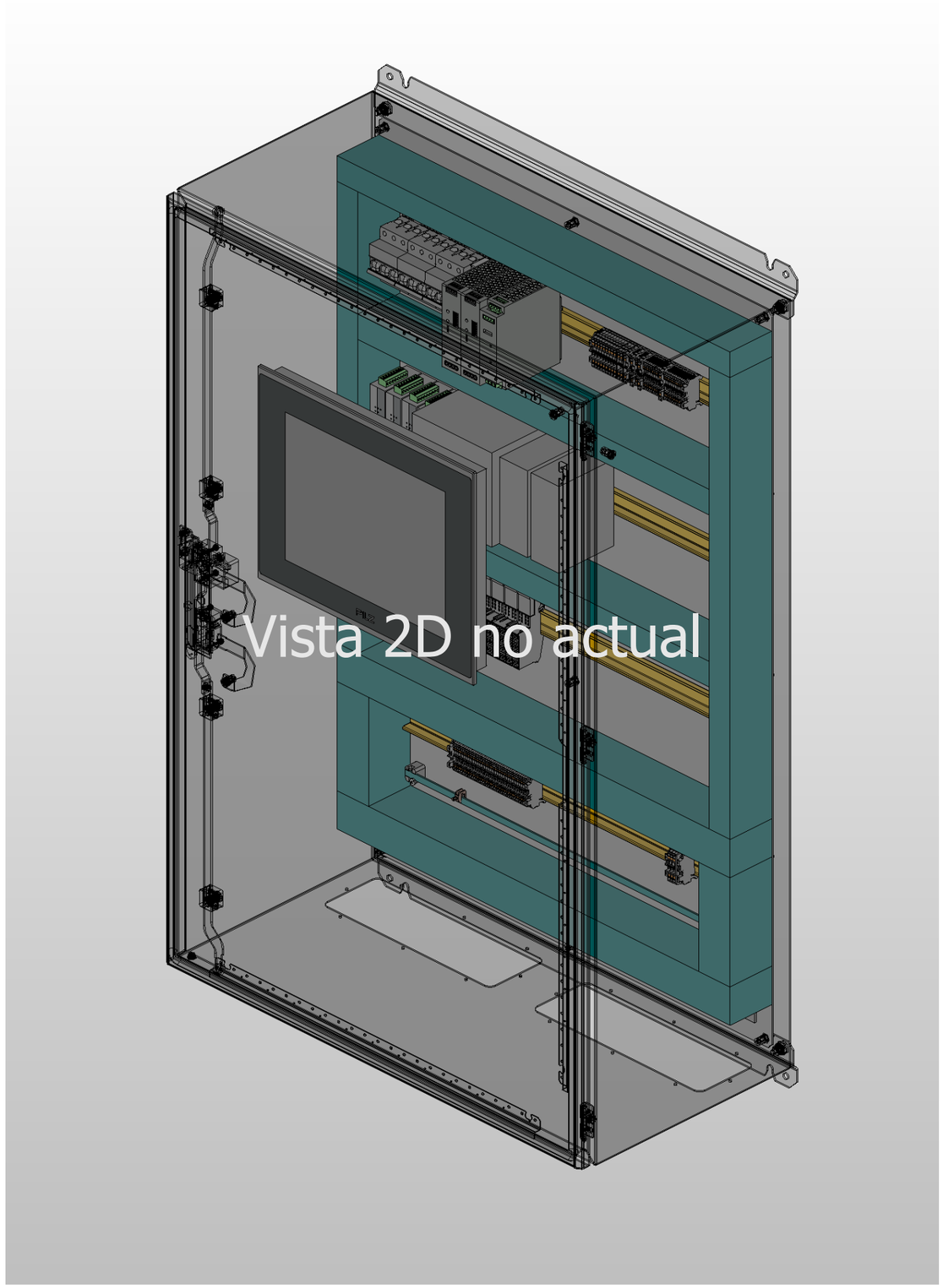
Vista 2D no actual

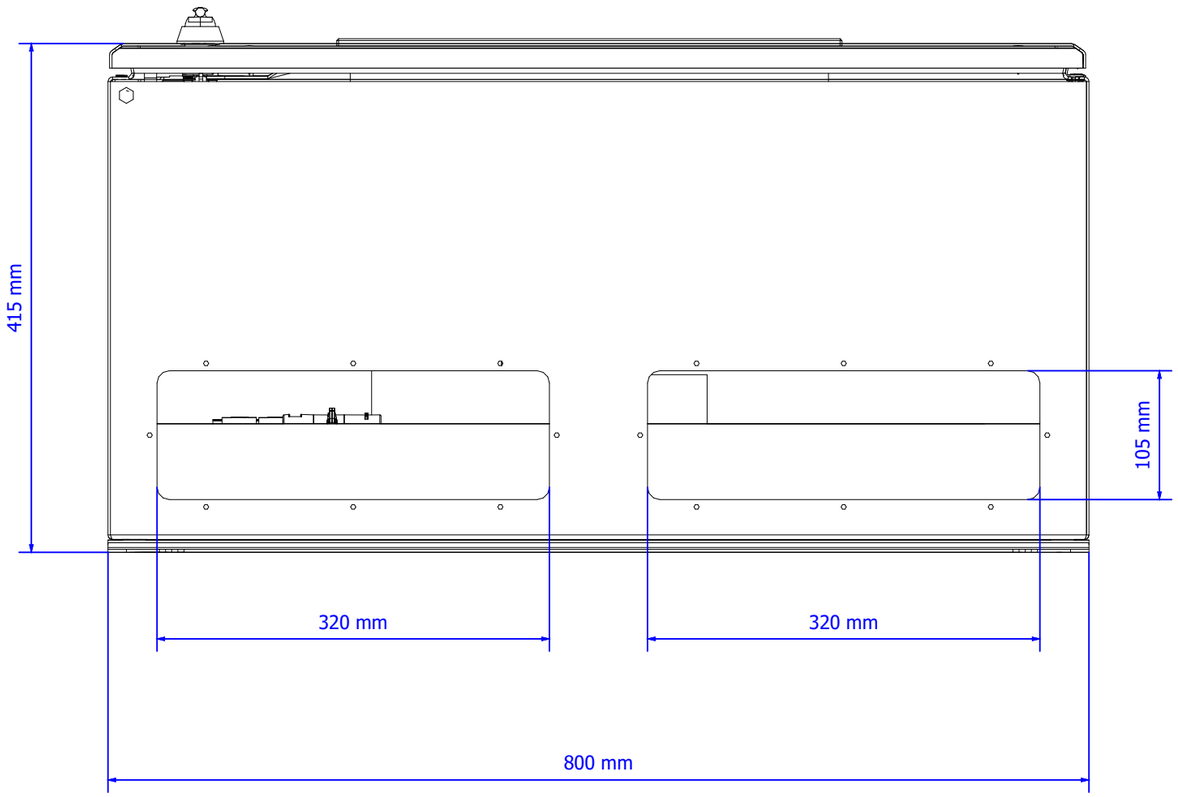
415 mm
105 mm
320 mm
320 mm
800 mm

Customer

EMPRESARIOS AGRUPADOS

EMPRESARIOS AGRUPADOS
C/Magallanes, 3
28015
ESPAÑA
3098000

http://www.empresariosagrupados.es/

Project:

7186-GIS_LSST
7186
LSST Global Safety Interlock System Design

E1
MACHINE

GIS-AcFiEa-CBT0101
GIS ACCESS FIRE EARTHQUAKE CABINET

Number of pages: 178

Made by:

IK4-TEKNIKER
AVDA. OTAOLA 20
20600 Eibar (Gipuzkoa) Spain
Tfno. : (+34) 943 206744
Fax : (+34) 943 202757
Web: www.tekniker.es

2.0	CHILE ASEMBLY	29/08/2019	JOSE MANUEL
3.0	CHILE ASEMBLY (Specific cabinets for M2CAM & PfAux)	17/09/2019	JOSE MANUEL
Review	Review description	Date	Reviewed

Drew by: J.M.CASTAÑO
Reviewed: F.LÓPEZ GARCIA
Date: 04/05/2017
Replaces:
Replaced by:

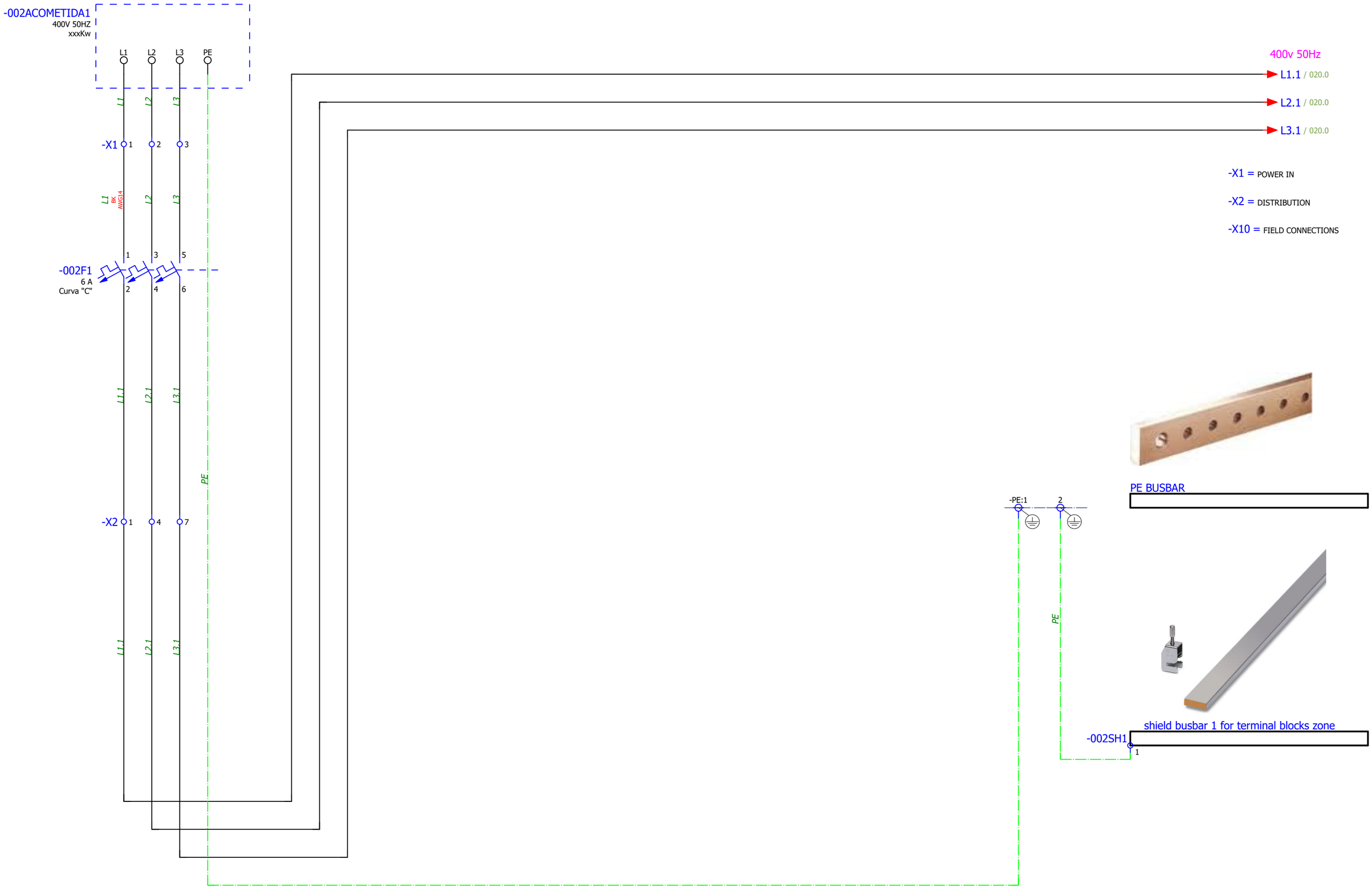

IK4 TEKNIKER Research Alliance

IK4-TEKNIKER
AVDA. OTAOLA 20
20600 Eibar (Gipuzkoa) Spain
Tfno.:(+34) 943 206744
Fax: (+34) 943 202757
Web: www.tekniker.es

Date	21/02/2018	2.0	29/08/2019	JOSE MANUEL				
Reviewed	F.LÓPEZ GARCIA	3.0	17/09/2019	JOSE MANUEL				
Drew by	JOSE MANUEL	Review	Date	Name	Review	Date	Name	

7186-GIS_LSST 7186

LSST Global Safety Interlock System Design

Replaces | Replaced by

POWER

Customer: EMPRESARIOS AGRUPADOS

C/Magallanes, 3
28015
3098000

http://www.empresariosagrupados.es/

= E1

+ GIS-AcFiEa-CBT0101

Page 002
Total number 178

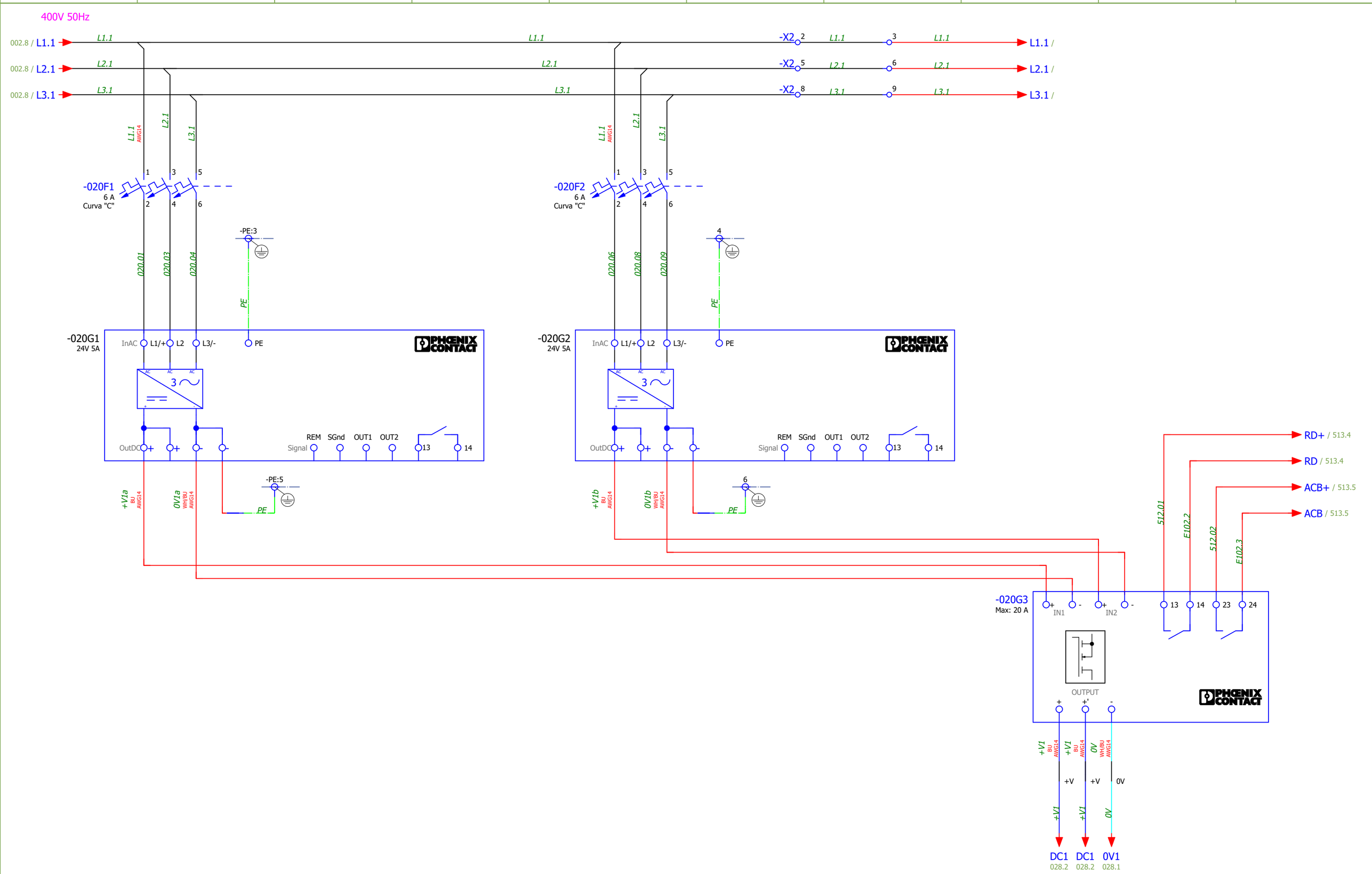

IK4 TEKNIKER Research Alliance

IK4-TEKNIKER
AVDA. OTAOLA 20
20600 Eibar (Gipuzkoa) Spain
Tfno.:(+34) 943 206744
Fax: (+34) 943 202757
Web: www.tekniker.es

Date	20/02/2018	2.0	29/08/2019	JOSE MANUEL				
Reviewed	F.LÓPEZ GARCIA	3.0	17/09/2019	JOSE MANUEL				
Drew by	JOSE MANUEL	Review	Date	Name	Review	Date	Name	

7186-GIS_LSST 7186

LSST Global Safety Interlock System Design

Replaces | Replaced by

DC POWER

Customer: EMPRESARIOS AGRUPADOS
C/Magallanes, 3
28015
3098000
http://www.empresariosagrupados.es/

= E1

+ GIS-AcFiEa-CBT0101

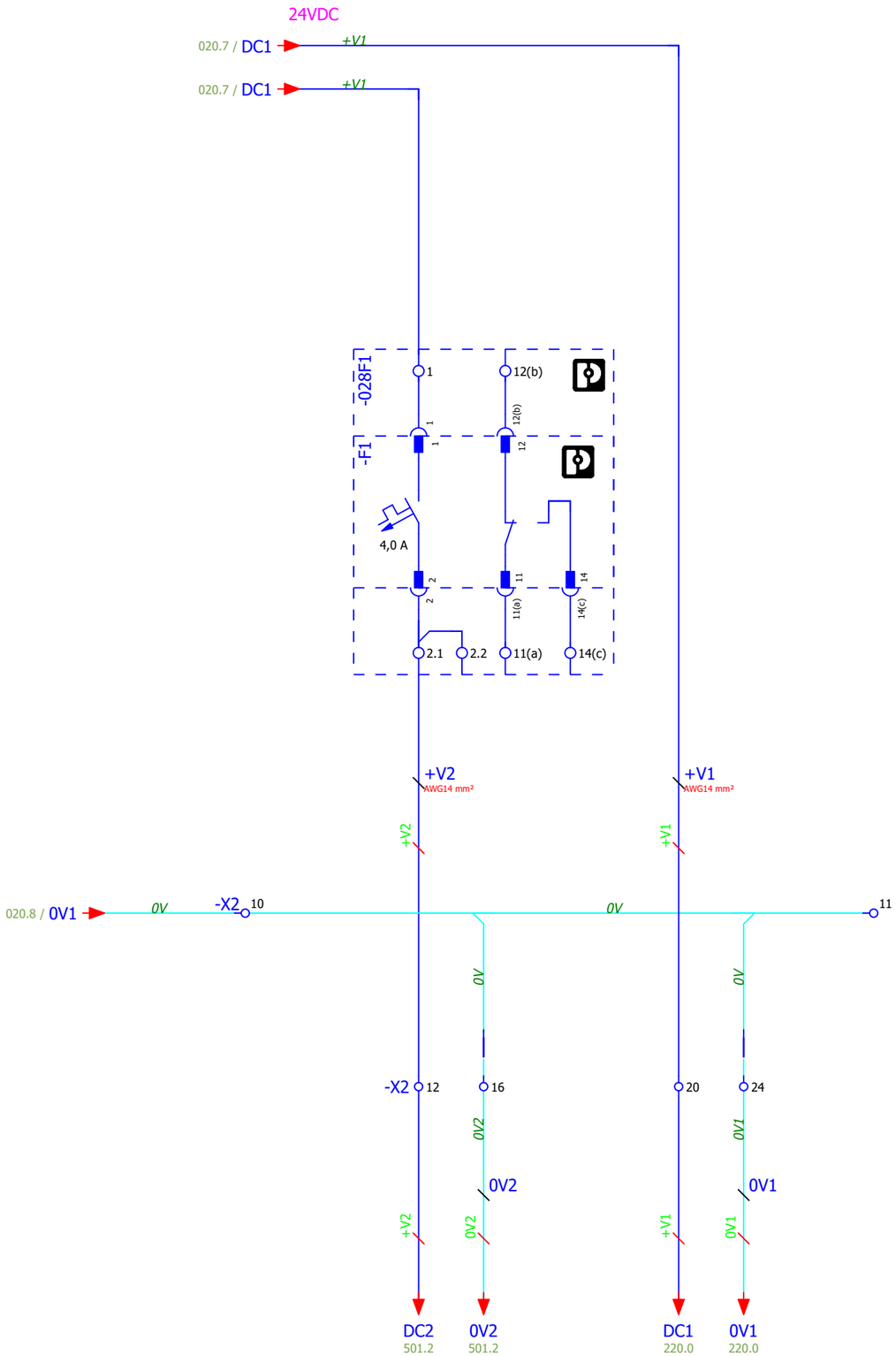

24VDC I/Os

24VDC CONTROL

IK4 TEKNIKER Research Alliance

IK4-TEKNIKER
AVDA. OTAOLA 20
20600 Eibar (Gipuzkoa) Spain
Tfno.:(+34) 943 206744
Fax: (+34) 943 202757
Web: www.tekniker.es

Date	20/02/2018	2.0	29/08/2019	JOSE MANUEL			
Reviewed	F.LÓPEZ GARCIA	3.0	17/09/2019	JOSE MANUEL			
Drew by	JOSE MANUEL	Review	Date	Name	Review	Date	Name

7186-GIS_LSST 7186

LSST Global Safety Interlock System Design

Replaces | Replaced by

DC DISTRIBUTION

Customer: EMPRESARIOS AGRUPADOS
C/Magallanes, 3
28015
3098000
http://www.empresariosagrupados.es/

= E1
+ GIS-AcFiEa-CBT0101

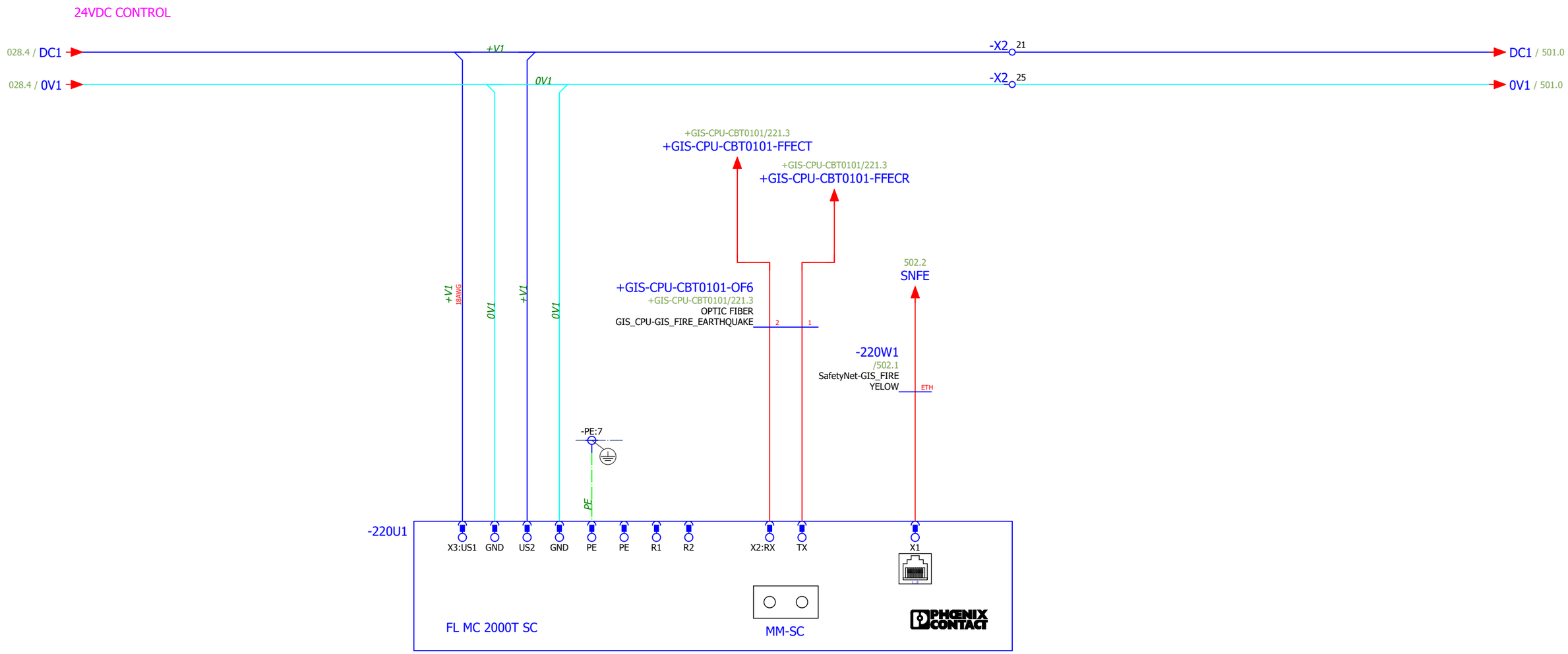

OPTIC FIBER GIS-CPU TO GIS-FIRE_EARTHQUAKE

IK4 TEKNIKER Research Alliance

IK4-TEKNIKER
AVDA. OTAOLA 20
20600 Eibar (Gipuzkoa) Spain
Tfno.:(+34) 943 206744
Fax: (+34) 943 202757
Web: www.tekniker.es

Date	20/02/2018	2.0	29/08/2019	JOSE MANUEL				
Reviewed	F.LÓPEZ GARCIA	3.0	17/09/2019	JOSE MANUEL				
Drew by	JOSE MANUEL	Review	Date	Name	Review	Date	Name	

7186-GIS_LSST 7186

LSST Global Safety Interlock System Design

Replaces | Replaced by

MM-SC OPTIC FIBER TO RJ45 CONVERSOR

Customer: EMPRESARIOS AGRUPADOS
C/Magallanes, 3
28015
3098000
http://www.empresariosagrupados.es/

= E1

+ GIS-AcFiEa-CBT0101

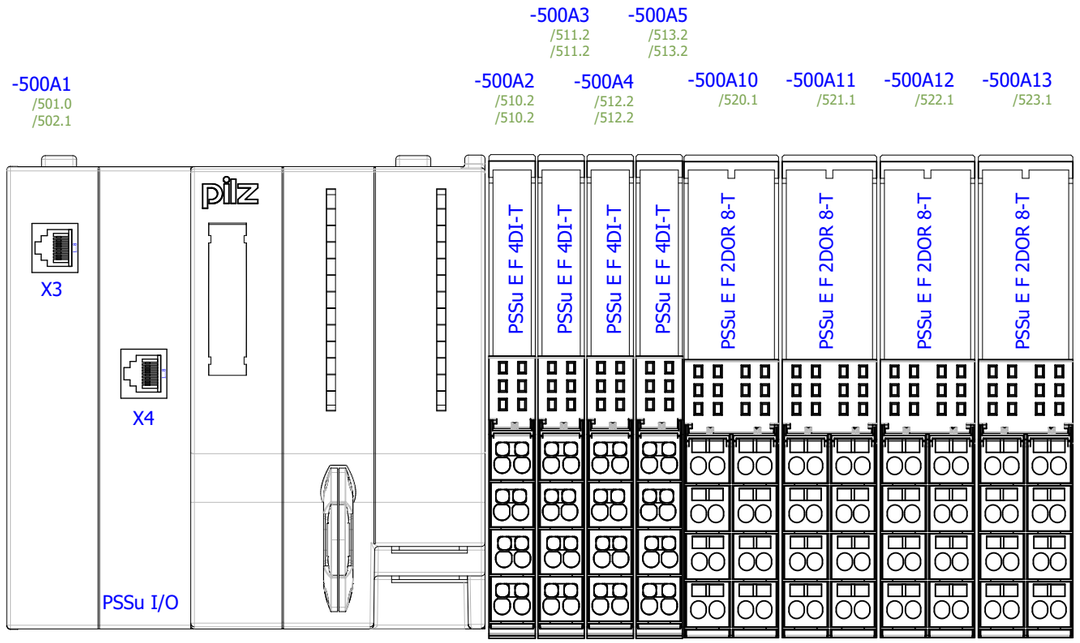

IK4 TEKNIKER Research Alliance

IK4-TEKNIKER
AVDA. OTAOLA 20
20600 Eibar (Gipuzkoa) Spain
Tfno.:(+34) 943 206744
Fax: (+34) 943 202757
Web: www.tekniker.es

Date	21/02/2018	2.0	29/08/2019	JOSE MANUEL				
Reviewed	F.LÓPEZ GARCIA	3.0	17/09/2019	JOSE MANUEL				
Drew by	JOSE MANUEL	Review	Date	Name	Review	Date	Name	

7186-GIS_LSST 7186

LSST Global Safety Interlock System Design

Replaces | Replaced by

EMERGENCY PLC PSSuniversal

Customer: EMPRESARIOS AGRUPADOS
C/Magallanes, 3
28015
3098000
http://www.empresariosagrupados.es/

= E1
+ GIS-AcFiEa-CBT0101

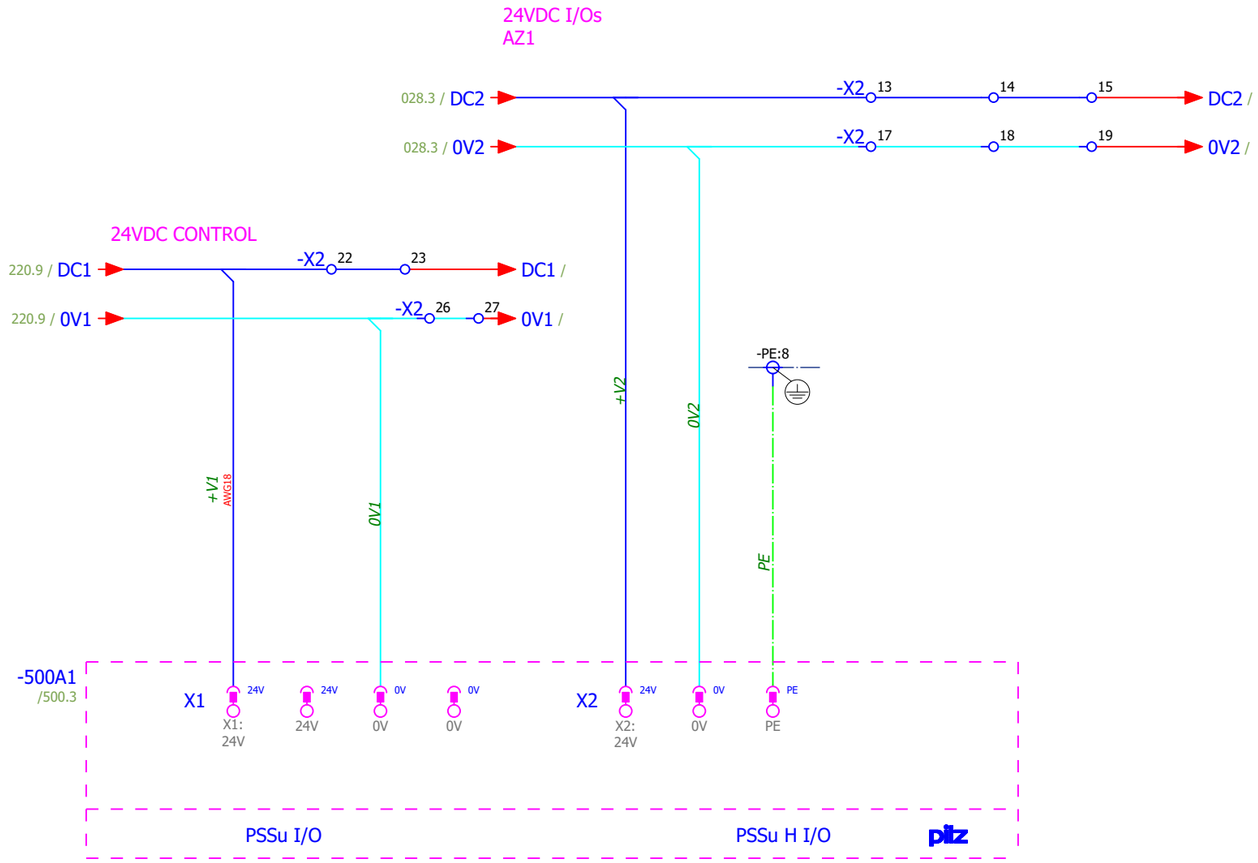

IK4 TEKNIKER Research Alliance
IK4-TEKNIKER
AVDA. OTAOLA 20
20600 Eibar (Gipuzkoa) Spain
Tfno.:(+34) 943 206744
Fax: (+34) 943 202757
Web: www.tekniker.es

Date	21/02/2018	2.0	29/08/2019	JOSE MANUEL				
Reviewed	F.LÓPEZ GARCIA	3.0	17/09/2019	JOSE MANUEL				
Drew by	JOSE MANUEL	Review	Date	Name	Review	Date	Name	

7186-GIS_LSST 7186
LSST Global Safety Interlock System Design

Replaces | Replaced by

POWER SAFETY PSS

Customer: EMPRESARIOS AGRUPADOS
C/Magallanes, 3
28015
3098000
http://www.empresariosagrupados.es/

= E1
+ GIS-AcFiEa-CBT0101

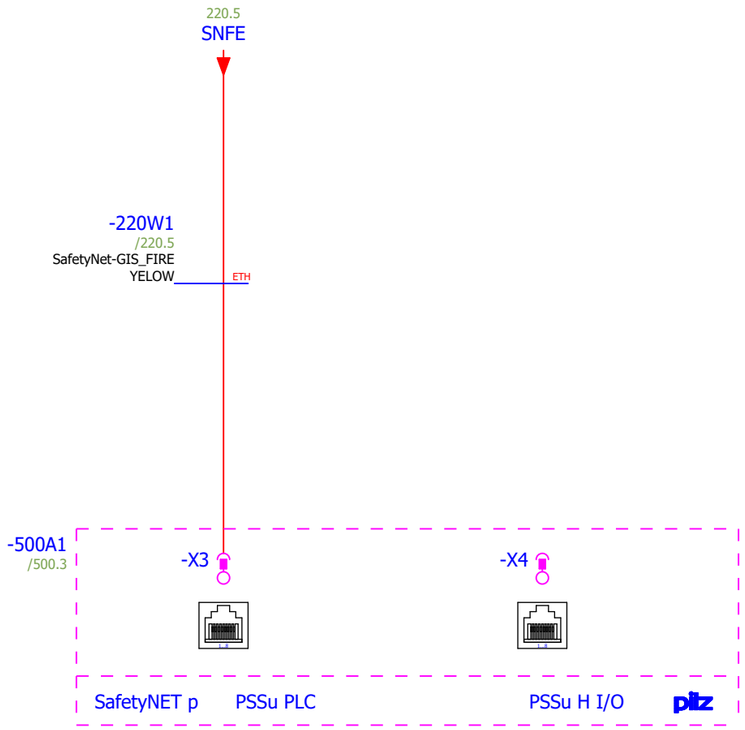

IK4 TEKNIKER Research Alliance
IK4-TEKNIKER
AVDA. OTAOLA 20
20600 Eibar (Gipuzkoa) Spain
Tfno.:(+34) 943 206744
Fax: (+34) 943 202757
Web: www.tekniker.es

Date	26/05/2017	2.0	29/08/2019	JOSE MANUEL				
Reviewed	F.LÓPEZ GARCIA	3.0	17/09/2019	JOSE MANUEL				
Drew by	JOSE MANUEL	Review	Date	Name	Review	Date	Name	

7186-GIS_LSST 7186
LSST Global Safety Interlock System Design

Replaces | Replaced by

SAFETY NET

Customer: EMPRESARIOS AGRUPADOS
C/Magallanes, 3
28015
3098000
http://www.empresariosagrupados.es/

= E1
+ GIS-AcFiEa-CBT0101

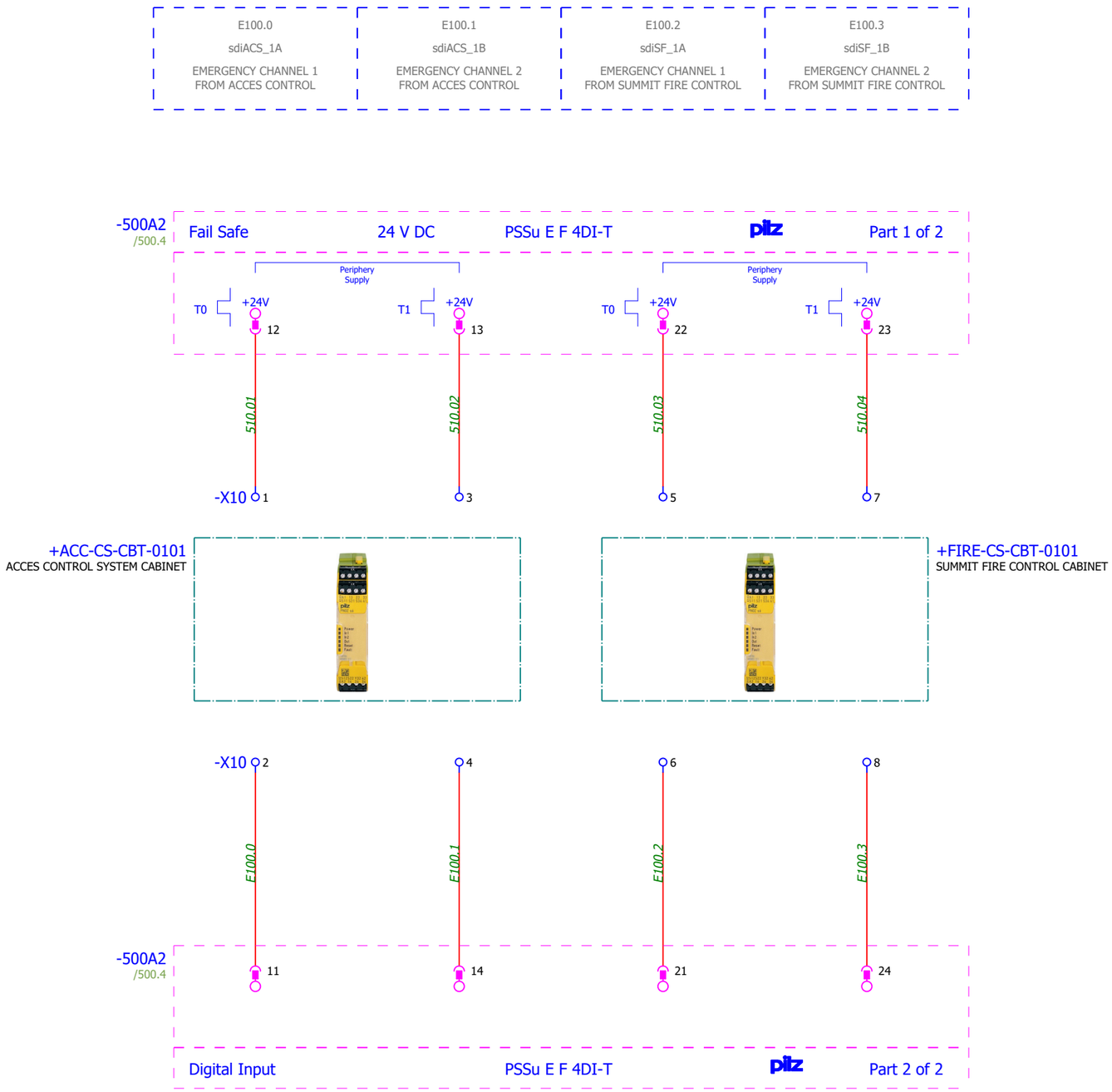

IK4 TEKNIKER Research Alliance
IK4-TEKNIKER
AVDA. OTAOLA 20
20600 Eibar (Gipuzkoa) Spain
Tfno.:(+34) 943 206744
Fax: (+34) 943 202757
Web: www.tekniker.es

Date	21/02/2018	2.0	29/08/2019	JOSE MANUEL				
Reviewed	F.LÓPEZ GARCIA	3.0	17/09/2019	JOSE MANUEL				
Drew by	JOSE MANUEL	Review	Date	Name	Review	Date	Name	

7186-GIS_LSST 7186
LSST Global Safety Interlock System Design

Replaces | Replaced by

SAFETY DIGITAL INPUTS

Customer: EMPRESARIOS AGRUPADOS
C/Magallanes, 3
28015
3098000
http://www.empresariosagrupados.es/

= E1
+ GIS-AcFiEa-CBT0101

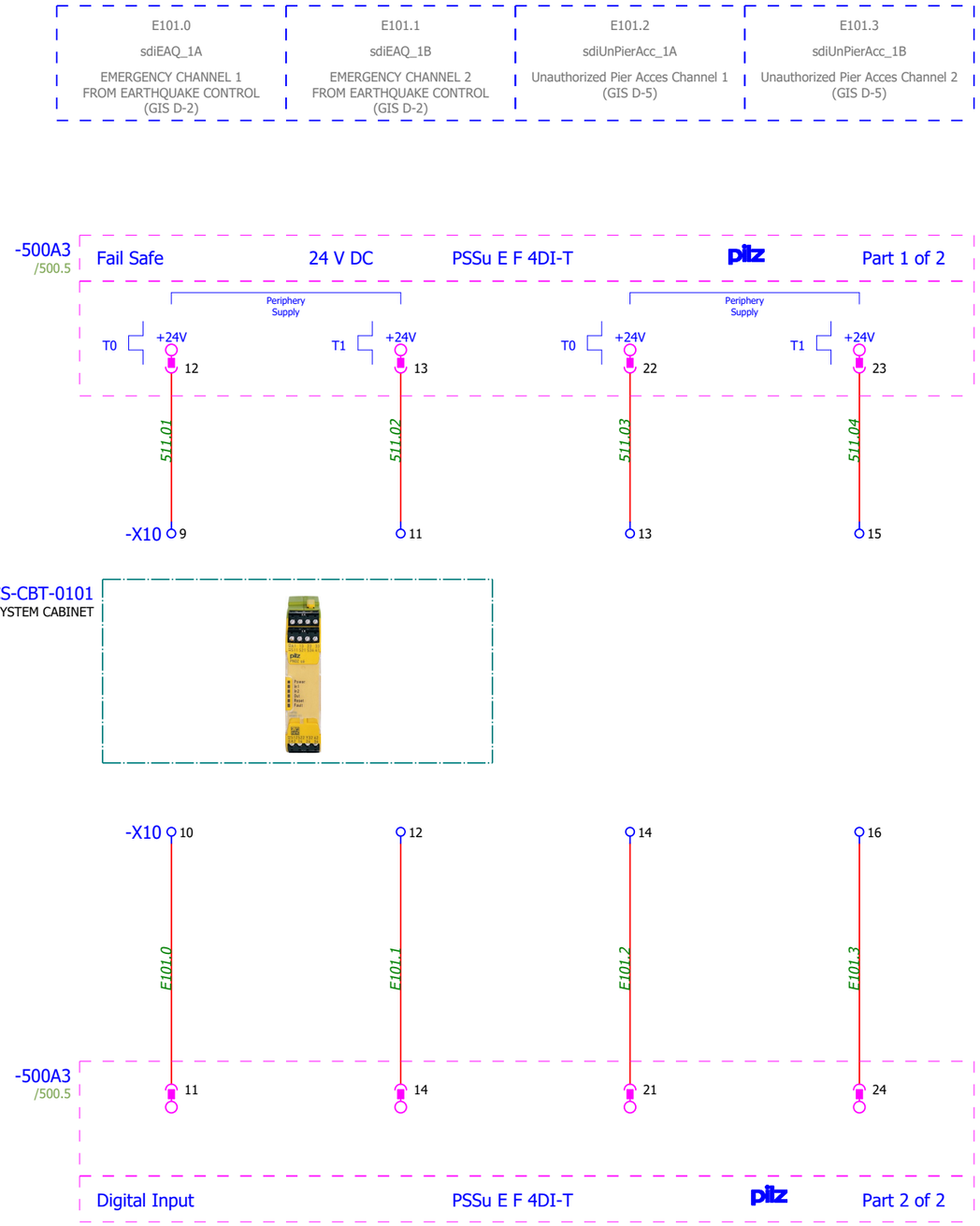

IK4 TEKNIKER Research Alliance
IK4-TEKNIKER
AVDA. OTAOLA 20
20600 Eibar (Gipuzkoa) Spain
Tfno.:(+34) 943 206744
Fax: (+34) 943 202757
Web: www.tekniker.es

Date	26/01/2018	2.0	29/08/2019	JOSE MANUEL				
Reviewed	F.LÓPEZ GARCIA	3.0	17/09/2019	JOSE MANUEL				
Drew by	JOSE MANUEL	Review	Date	Name	Review	Date	Name	

7186-GIS_LSST 7186
LSST Global Safety Interlock System Design

Replaces | Replaced by

SAFETY DIGITAL INPUTS

Customer: EMPRESARIOS AGRUPADOS
C/Magallanes, 3
28015
3098000
http://www.empresariosagrupados.es/

= E1
+ GIS-AcFiEa-CBT0101

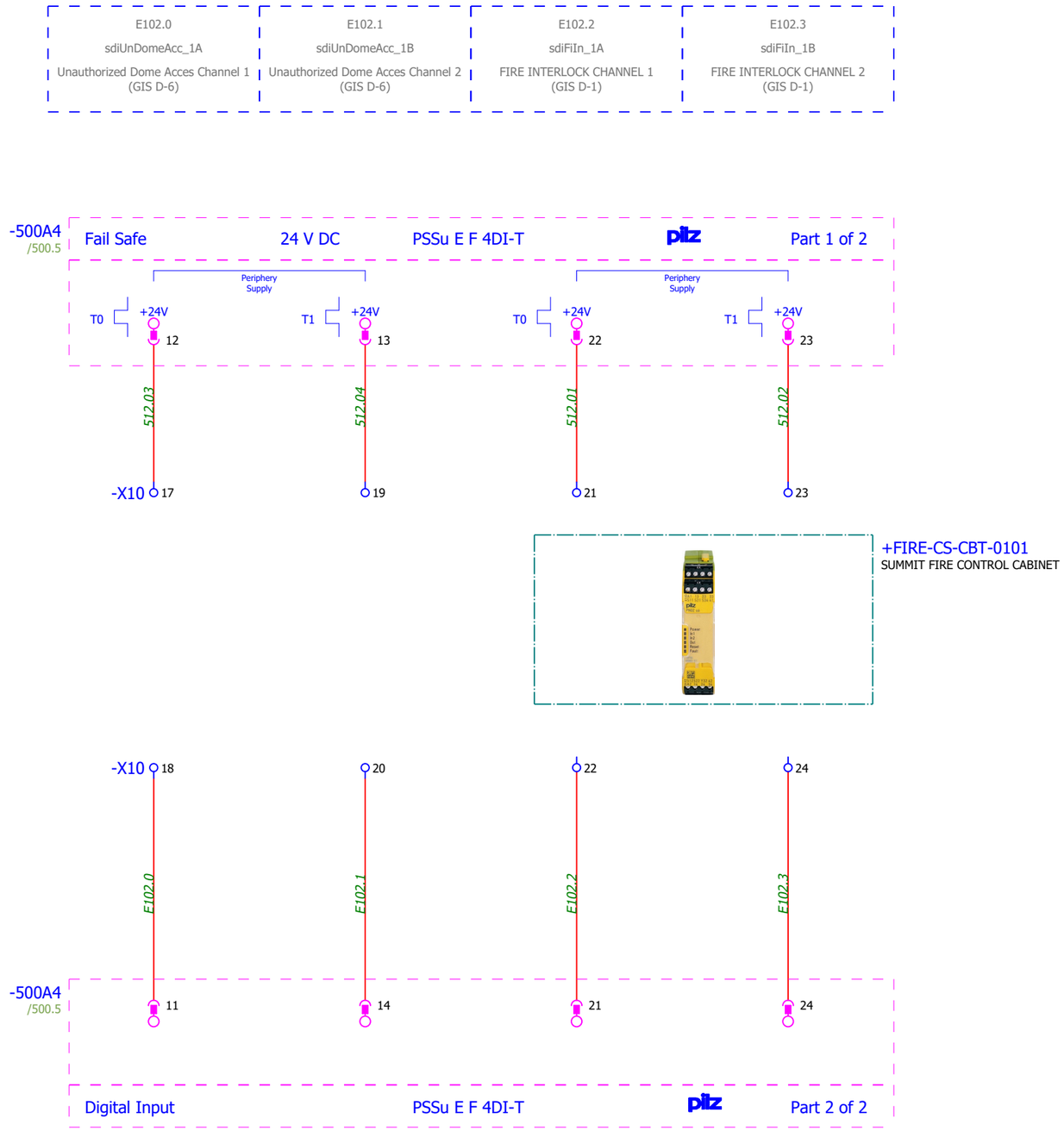

IK4 TEKNIKER Research Alliance
IK4-TEKNIKER
AVDA. OTAOLA 20
20600 Eibar (Gipuzkoa) Spain
Tfno.:(+34) 943 206744
Fax: (+34) 943 202757
Web: www.tekniker.es

Date	26/01/2018	2.0	29/08/2019	JOSE MANUEL				
Reviewed	F.LÓPEZ GARCIA	3.0	17/09/2019	JOSE MANUEL				
Drew by	JOSE MANUEL	Review	Date	Name	Review	Date	Name	

7186-GIS_LSST 7186
LSST Global Safety Interlock System Design

Replaces | Replaced by

SAFETY DIGITAL INPUTS

Customer: EMPRESARIOS AGRUPADOS
C/Magallanes, 3
28015
3098000
http://www.empresariosagrupados.es/

= E1
+ GIS-AcFiEa-CBT0101

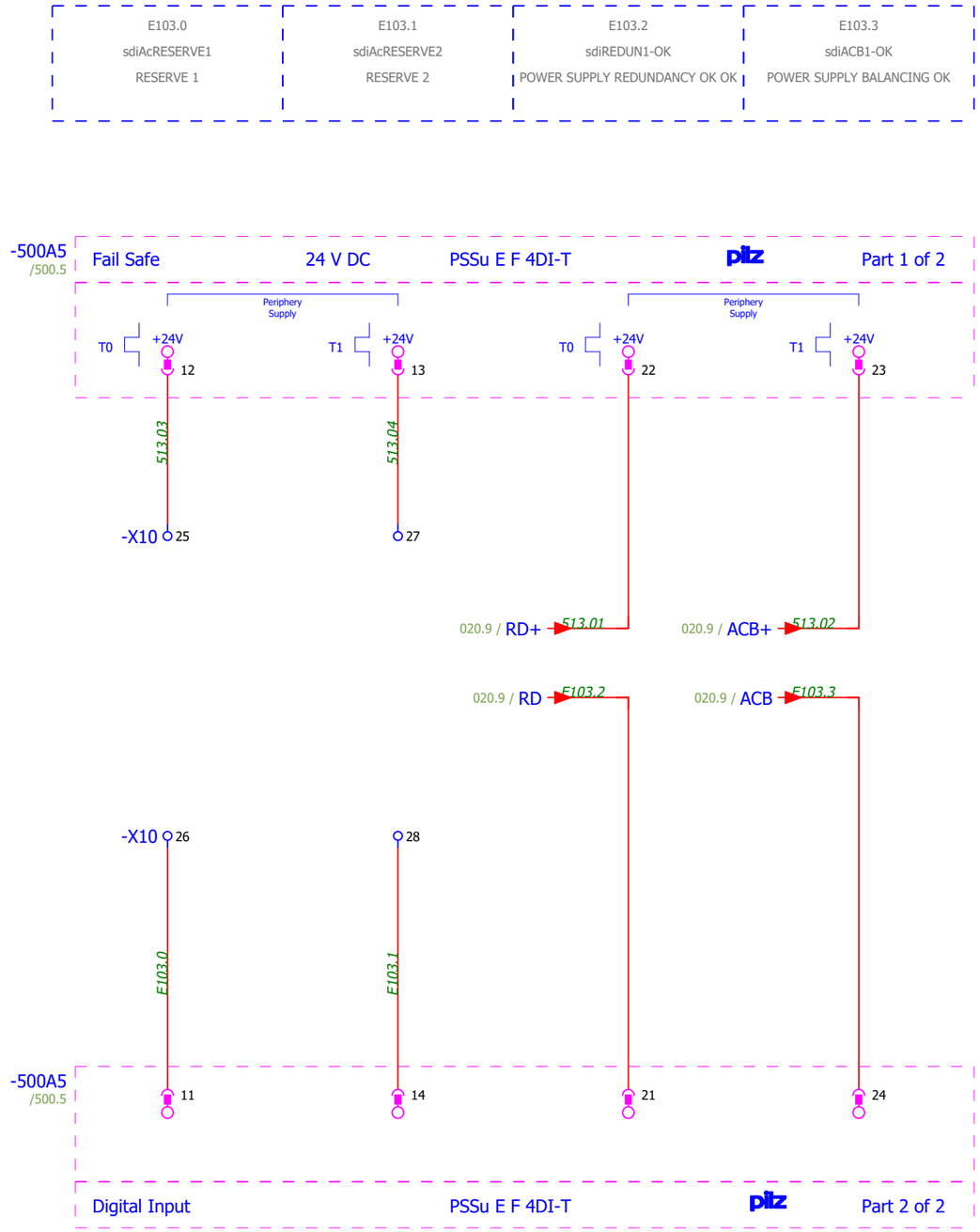

IK4 TEKNIKER Research Alliance

IK4-TEKNIKER
AVDA. OTAOLA 20
20600 Eibar (Gipuzkoa) Spain
Tfno.:(+34) 943 206744
Fax: (+34) 943 202757
Web: www.tekniker.es

Date	21/02/2018	2.0	29/08/2019	JOSE MANUEL			
Reviewed	F.LÓPEZ GARCIA	3.0	17/09/2019	JOSE MANUEL			
Drew by	JOSE MANUEL	Review	Date	Name	Review	Date	Name

7186-GIS_LSST 7186

LSST Global Safety Interlock System Design

Replaces | Replaced by

SAFETY DIGITAL INPUTS

Customer: EMPRESARIOS AGRUPADOS
C/Magallanes, 3
28015
3098000
http://www.empresariosagrupados.es/

= E1
+ GIS-AcFiEa-CBT0101

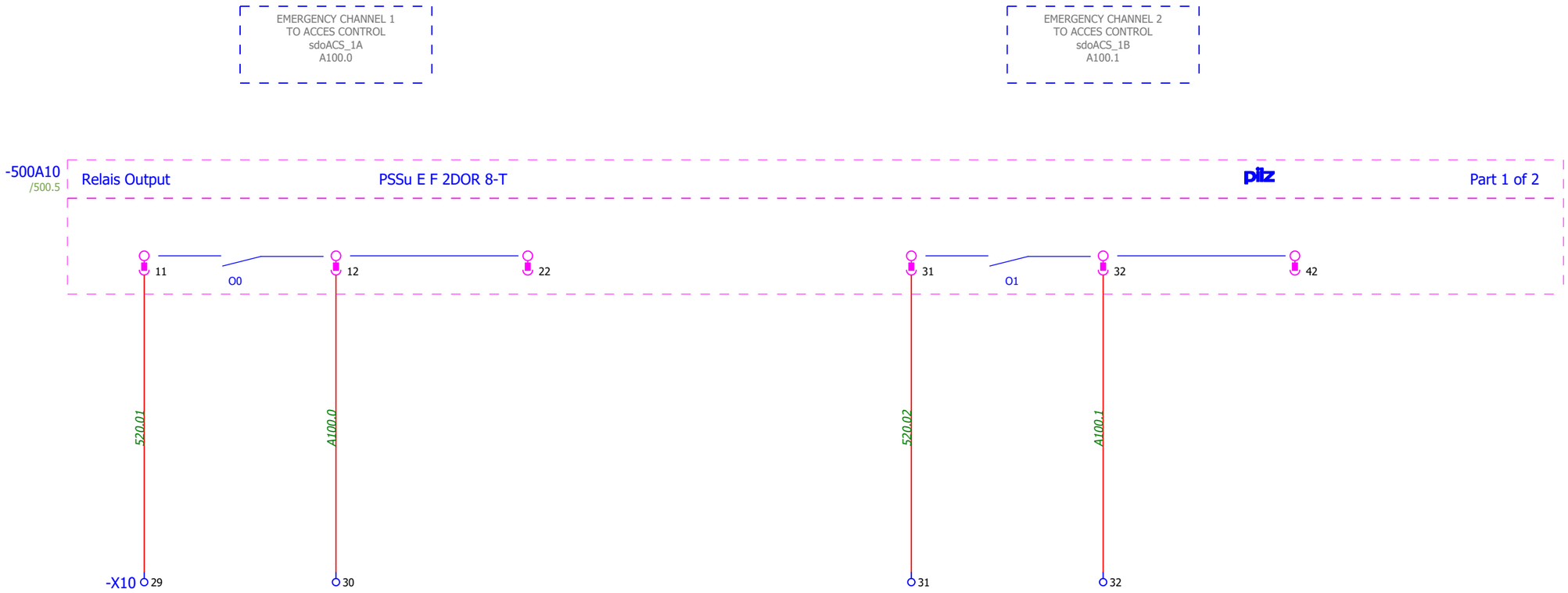
EMERGENCY CHANNEL 1
TO ACCES CONTROL
sdoACS_1A
A100.0
EMERGENCY CHANNEL 2
TO ACCES CONTROL
sdoACS_1B
A100.1
-500A10
/500.5
Relais Output
PSSu E F 2DOR 8-T
pilz
Part 1 of 2
11
O0
12
22
31
O1
32
42
520.01
A100.0
520.02
A100.1
-X10
29
30
31
32

+ACC-CS-CBT-0101
ACCES CONTROL SYSTEM CABINET

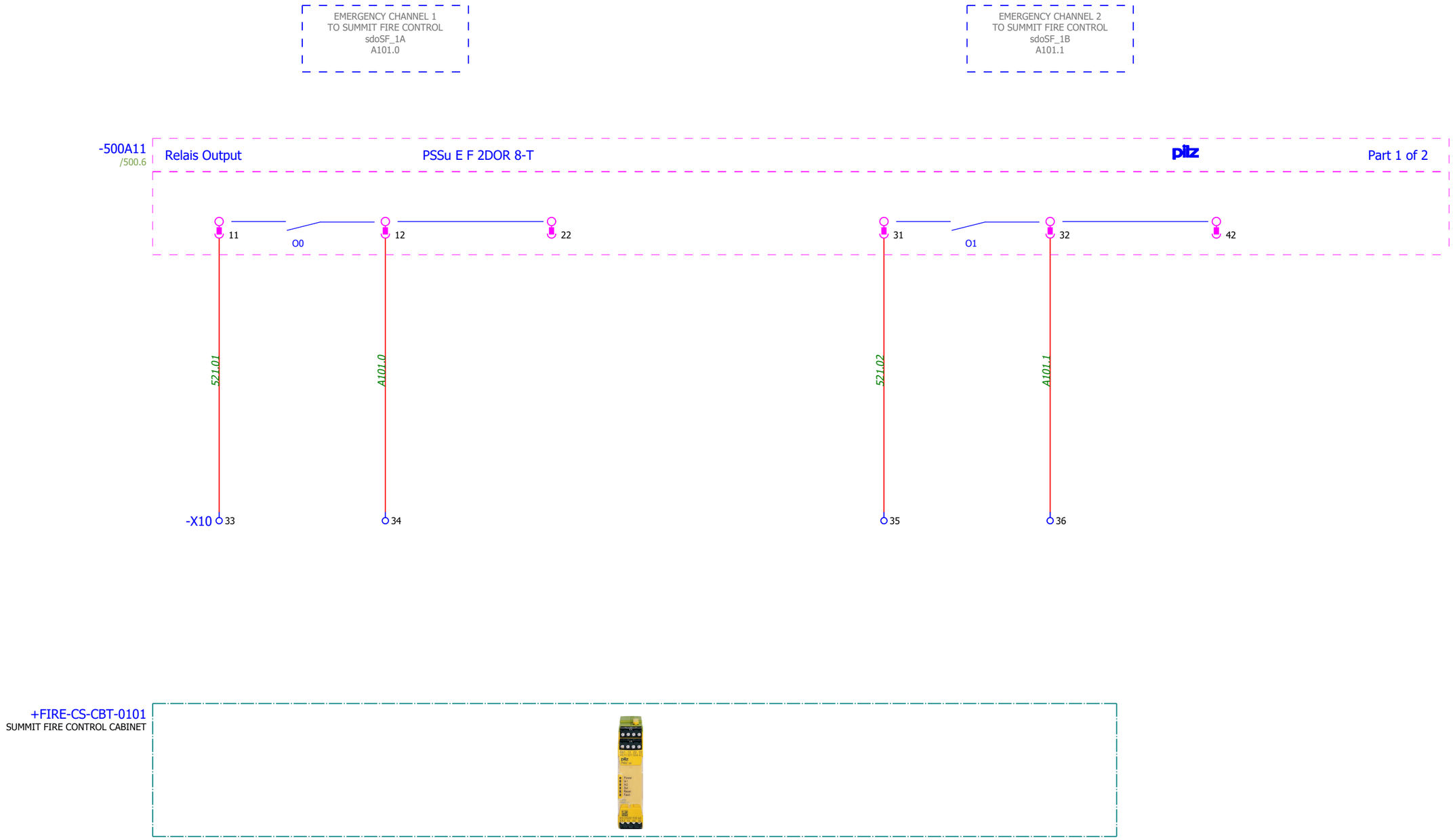

◁ 520

522 ▷

IK4 TEKNIKER Research Alliance
IK4-TEKNIKER
AVDA. OTAOLA 20
20600 Eibar (Gipuzkoa) Spain
Tfno.:(+34) 943 206744
Fax: (+34) 943 202757
Web: www.tekniker.es

Date	26/01/2018	2.0	29/08/2019	JOSE MANUEL			
Reviewed	F.LÓPEZ GARCIA	3.0	17/09/2019	JOSE MANUEL			
Drew by	JOSE MANUEL	Review	Date	Name	Review	Date	Name

7186-GIS_LSST 7186
LSST Global Safety Interlock System Design

Replaces | Replaced by

SAFETY DIGITAL OUTPUTS

Customer: EMPRESARIOS AGRUPADOS
C/Magallanes, 3
28015
3098000
http://www.empresariosagrupados.es/

= E1
+ GIS-AcFiEa-CBT0101

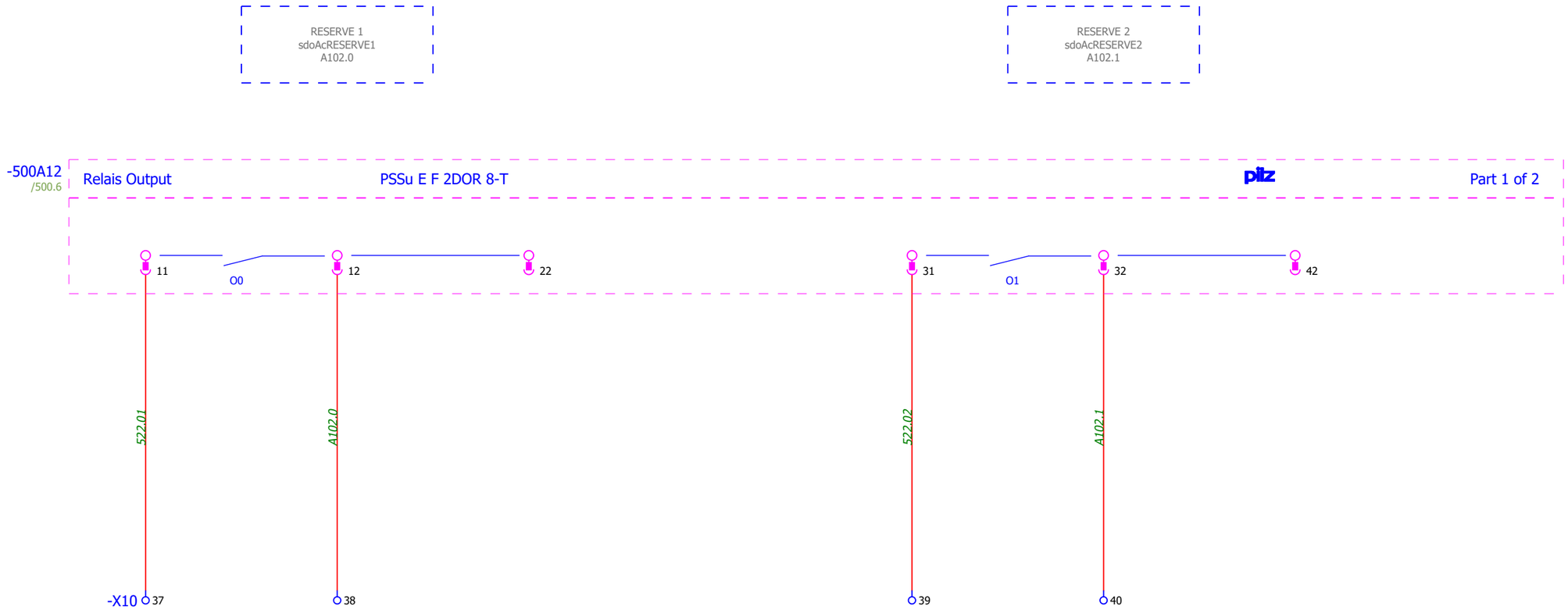

IK4 TEKNIKER Research Alliance
IK4-TEKNIKER
AVDA. OTAOLA 20
20600 Eibar (Gipuzkoa) Spain
Tfno.:(+34) 943 206744
Fax: (+34) 943 202757
Web: www.tekniker.es

Date	26/01/2018	2.0	29/08/2019	JOSE MANUEL			
Reviewed	F.LÓPEZ GARCIA	3.0	17/09/2019	JOSE MANUEL			
Drew by	JOSE MANUEL	Review	Date	Name	Review	Date	Name

7186-GIS_LSST 7186
LSST Global Safety Interlock System Design

Replaces | Replaced by

SAFETY DIGITAL OUTPUTS

Customer: EMPRESARIOS AGRUPADOS
C/Magallanes, 3
28015
3098000
http://www.empresariosagrupados.es/

= E1
+ GIS-AcFiEa-CBT0101

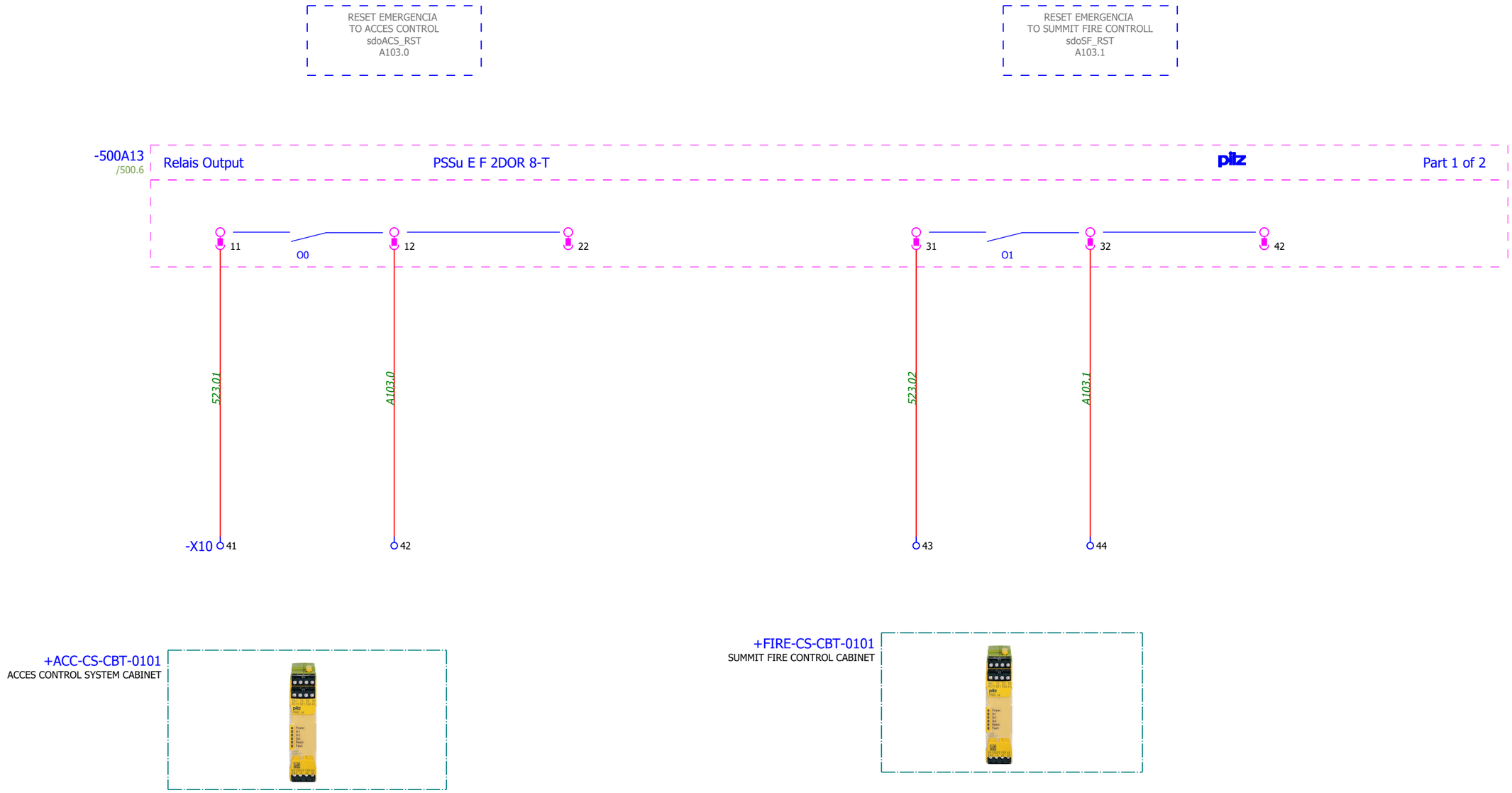

IK4 TEKNIKER Research Alliance

IK4-TEKNIKER
AVDA. OTAOLA 20
20600 Eibar (Gipuzkoa) Spain
Tfno.:(+34) 943 206744
Fax: (+34) 943 202757
Web: www.tekniker.es

Date	21/02/2018	2.0	29/08/2019	JOSE MANUEL				
Reviewed	F.LÓPEZ GARCIA	3.0	17/09/2019	JOSE MANUEL				
Drew by	JOSE MANUEL	Review	Date	Name	Review	Date	Name	

7186-GIS_LSST 7186

LSST Global Safety Interlock System Design

Replaces | Replaced by

SAFETY DIGITAL OUTPUTS

Customer: EMPRESARIOS AGRUPADOS
C/Magallanes, 3
28015
3098000
http://www.empresariosagrupados.es/

= E1
+ GIS-AcFiEa-CBT0101

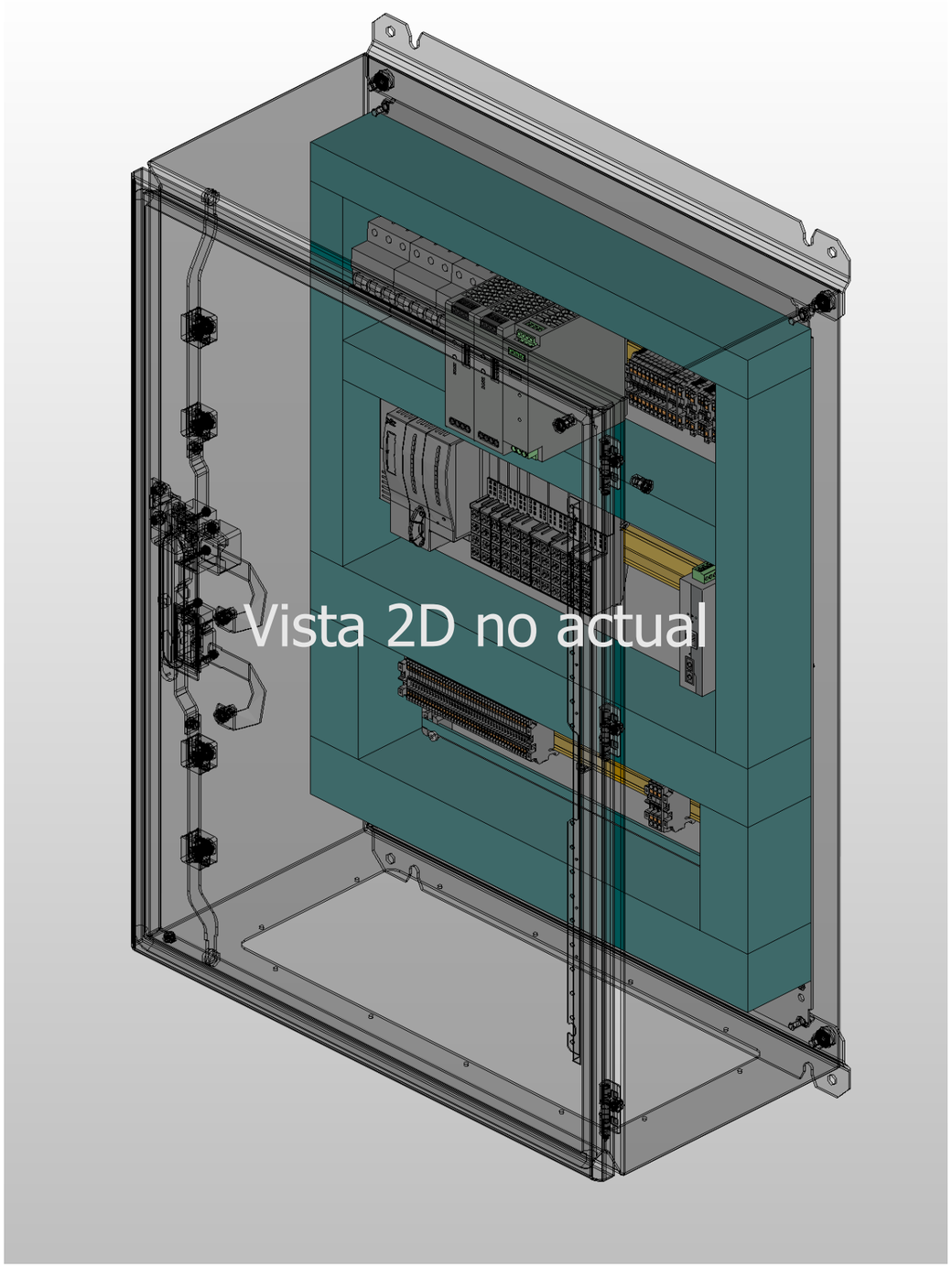
Vista 2D no actual

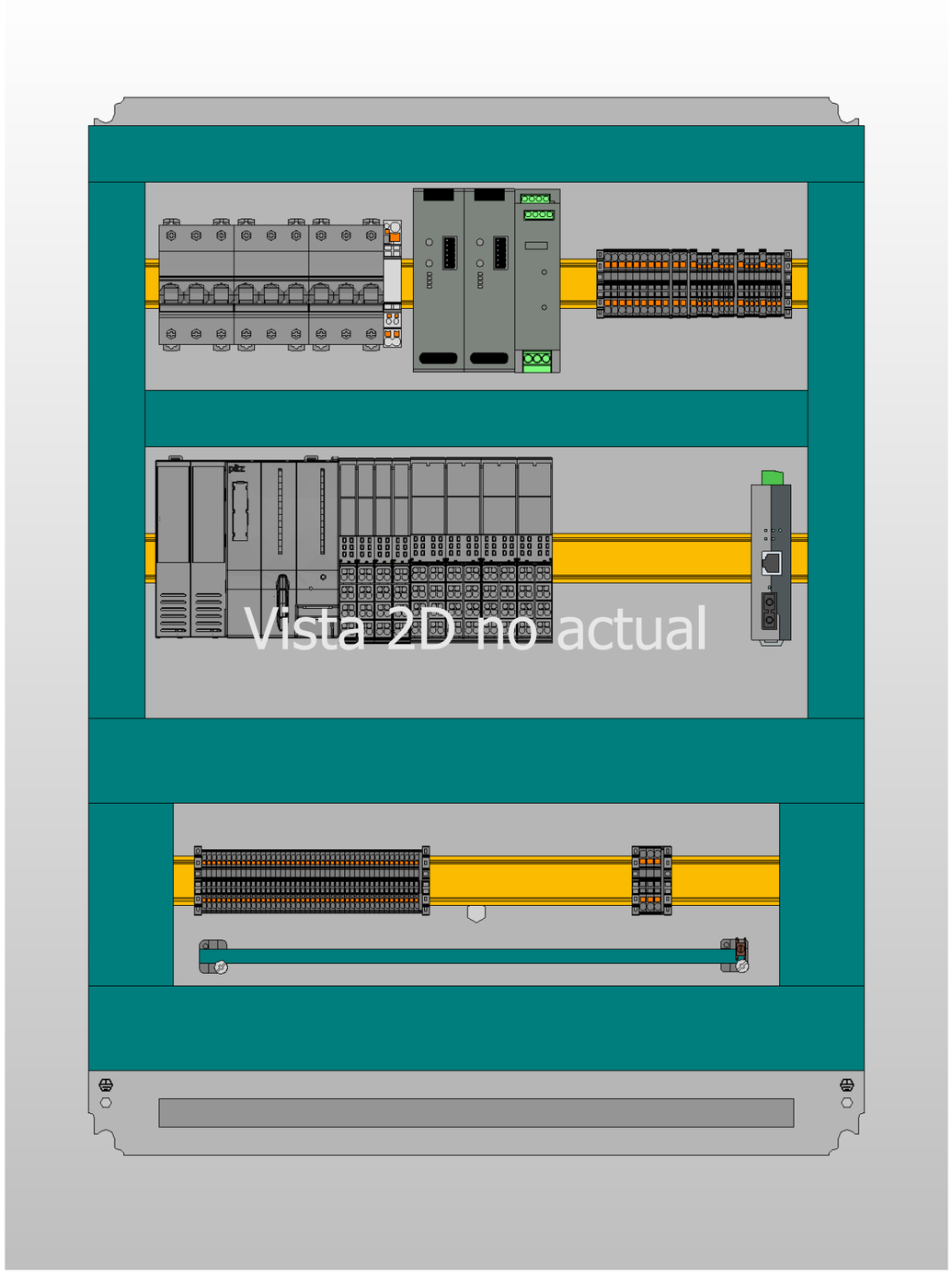
Vista 2D no actual

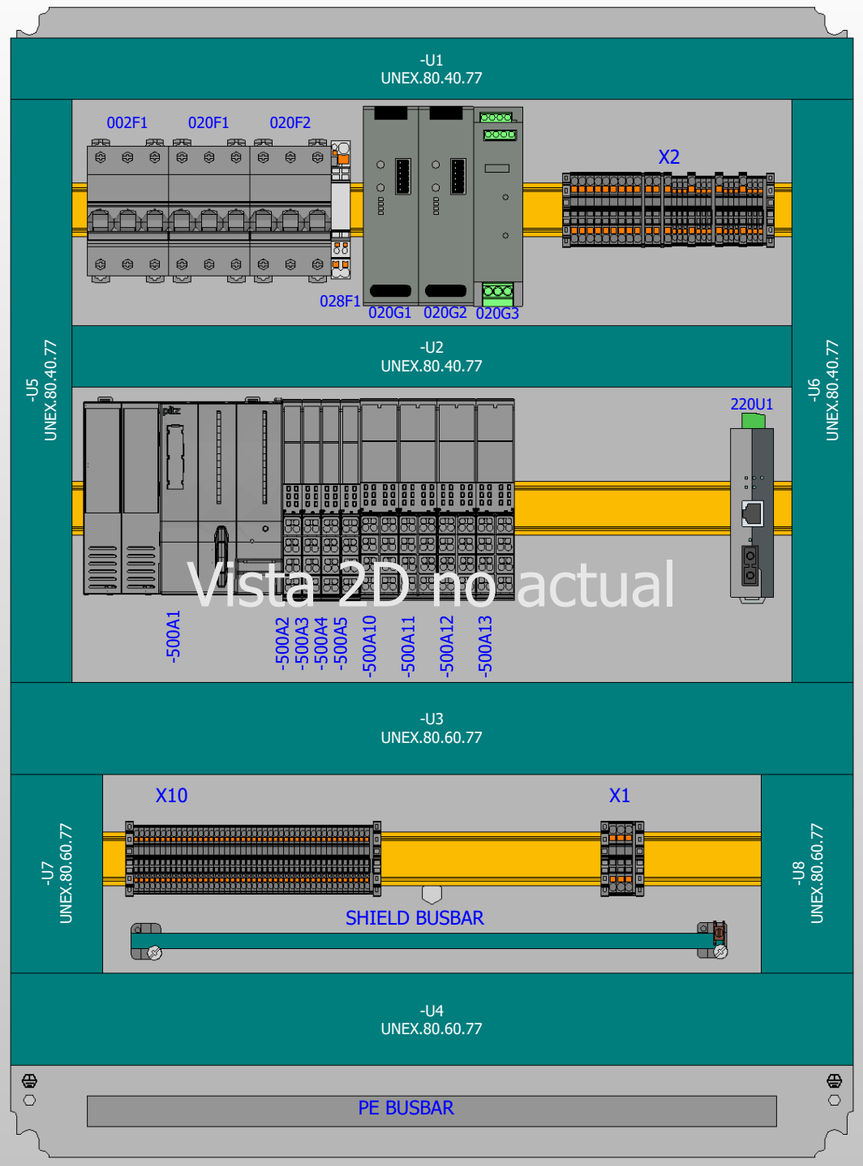

X2

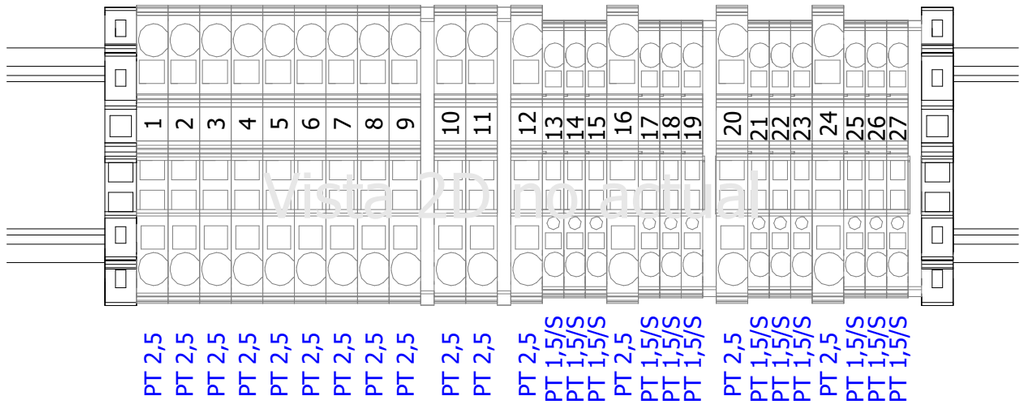

X10

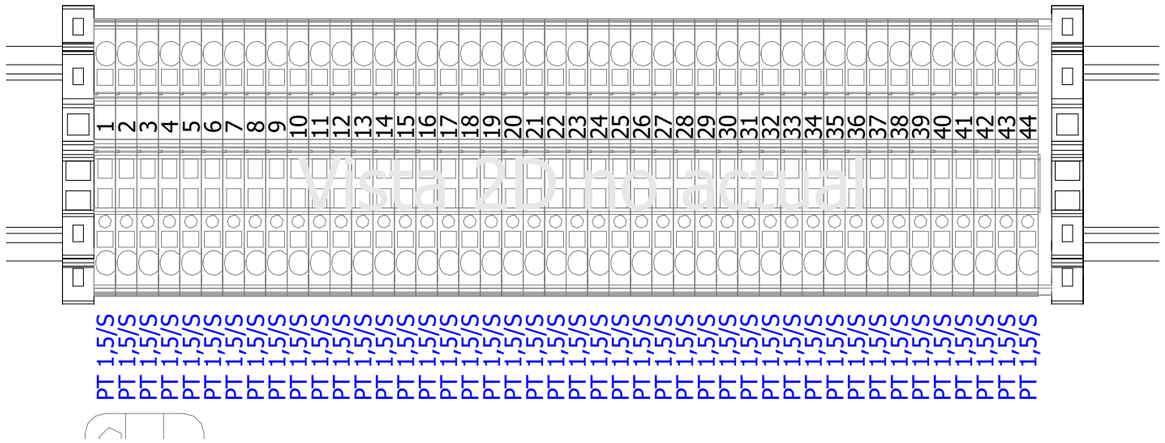
1 2 3 4 5 6 7 8 9 10 11 12 13 14 15 16 17 18 19 20 21 22 23 24 25 26 27 28 29 30 31 32 33 34 35 36 37 38 39 40 41 42 43 44
PT 1,5/S PT 1,5/S PT 1,5/S

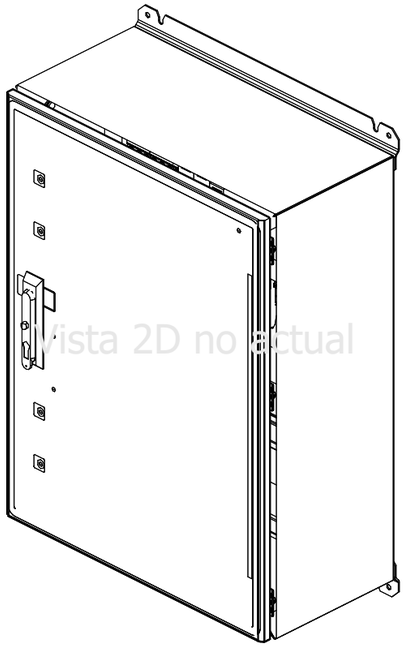

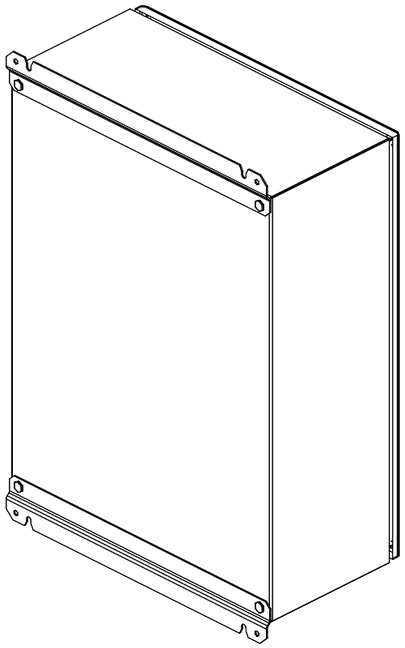

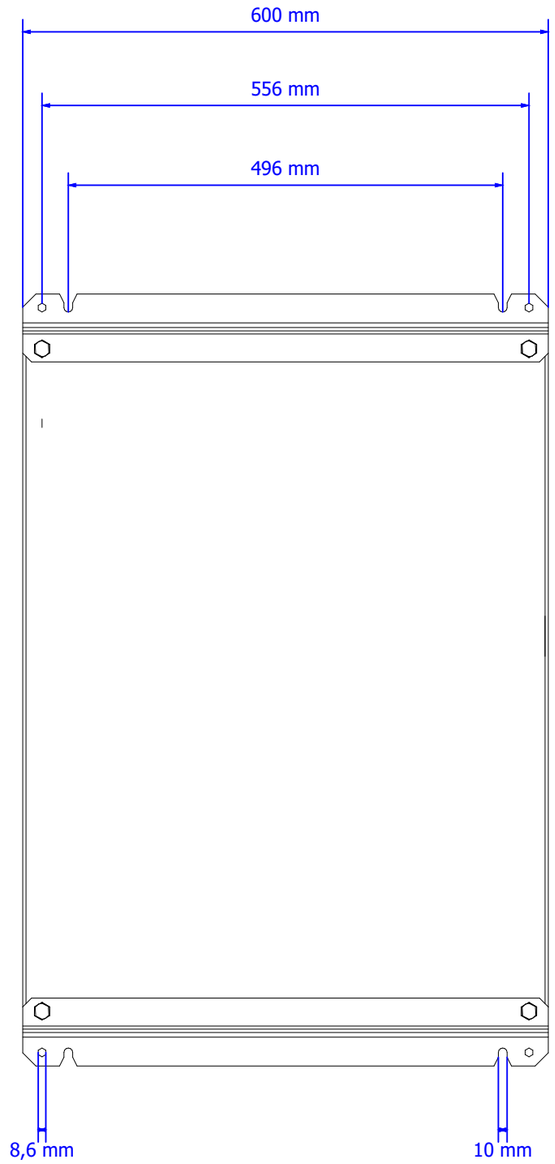

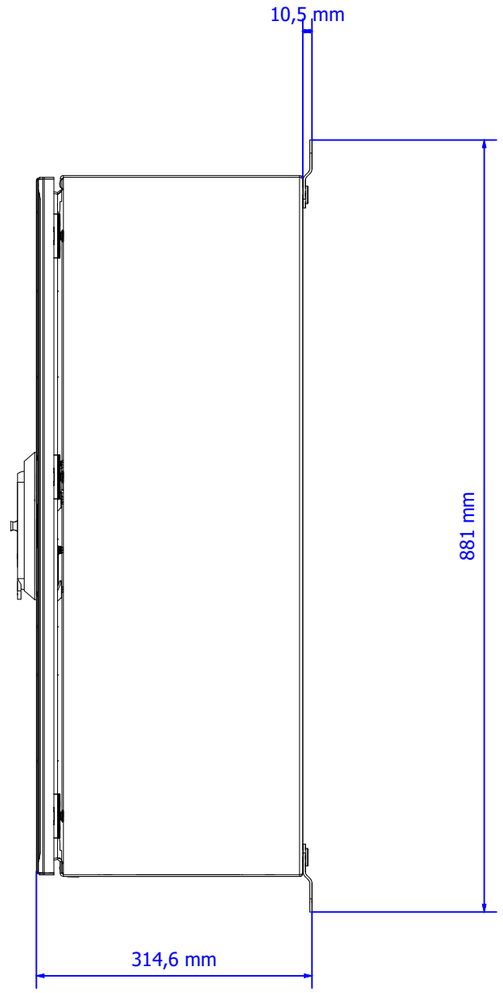

IK4 TEKNIKER Research Alliance

IK4-TEKNIKER
AVDA. OTAOLA 20
20600 Eibar (Gipuzkoa) Spain
Tfno.:(+34) 943 206744
Fax: (+34) 943 202757
Web: www.tekniker.es

Date	21/02/2018	2.0	29/08/2019	JOSE MANUEL				
Reviewed	F.LÓPEZ GARCIA	3.0	17/09/2019	JOSE MANUEL				
Drew by	JOSE MANUEL	Review	Date	Name	Review	Date	Name	

7186-GIS_LSST 7186

LSST Global Safety Interlock System Design

Replaces | Replaced by

CABINET DIMENSIONS

Customer: EMPRESARIOS AGRUPADOS
C/Magallanes, 3
28015
3098000
http://www.empresariosagrupados.es/

= E1
+ GIS-AcFiEa-CBT0101

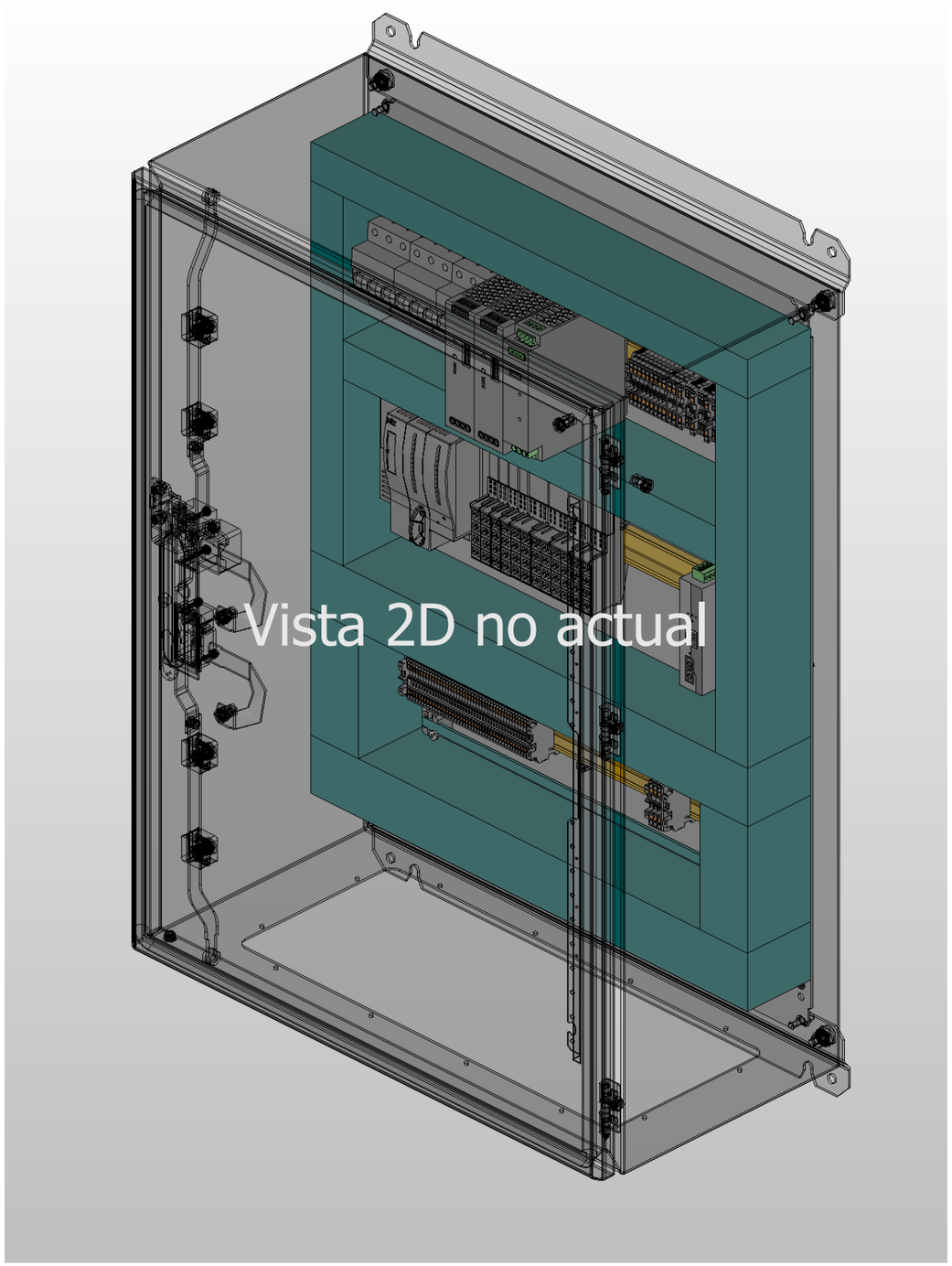

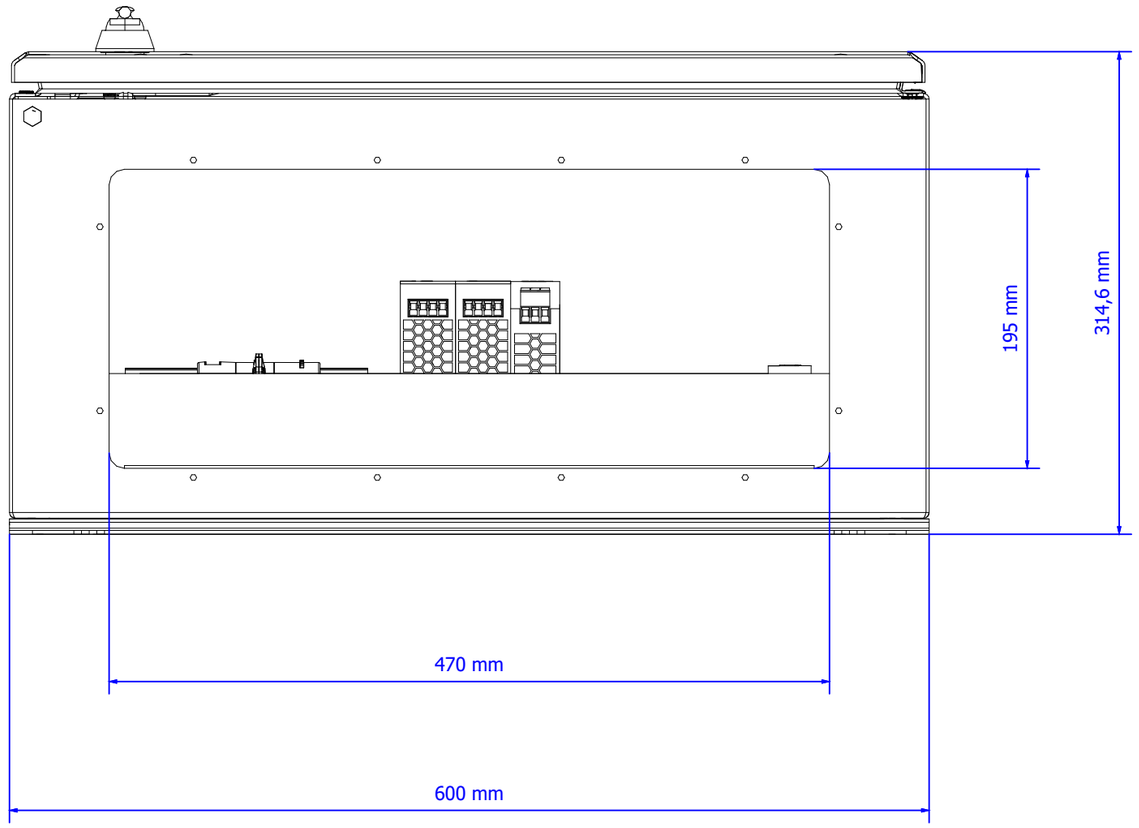

IK4 TEKNIKER Research Alliance
IK4-TEKNIKER
AVDA. OTAOLA 20
20600 Eibar (Gipuzkoa) Spain
Tfno.:(+34) 943 206744
Fax: (+34) 943 202757
Web: www.tekniker.es

Date	21/02/2018	2.0	29/08/2019	JOSE MANUEL				
Reviewed	F.LÓPEZ GARCIA	3.0	17/09/2019	JOSE MANUEL				
Drew by	JOSE MANUEL	Review	Date	Name	Review	Date	Name	

7186-GIS_LSST 7186
LSST Global Safety Interlock System Design

Replaces | Replaced by

CABLE ENTRANCE DIMENSIONS

Customer: EMPRESARIOS AGRUPADOS
C/Magallanes, 3
28015
3098000
http://www.empresariosagrupados.es/

= E1
+ GIS-AcFiEa-CBT0101

Customer

EMPRESARIOS AGRUPADOS

EMPRESARIOS AGRUPADOS
C/Magallanes, 3
28015
ESPAÑA
3098000

http://www.empresariosagrupados.es/

Project:

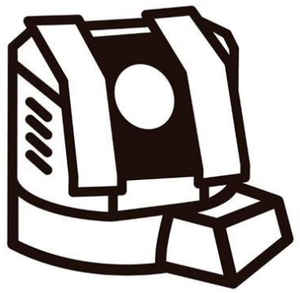

7186-GIS_LSST
7186
LSST Global Safety Interlock System Design

E1
MACHINE

GIS-LASER-CBT0101
GIS LASER CONTROLER CABINET

Number of pages: 178

Made by:

IK4-TEKNIKER
AVDA. OTAOLA 20
20600 Eibar (Gipuzkoa) Spain
Tfno. : (+34) 943 206744
Fax : (+34) 943 202757
Web: www.tekniker.es

2.0	CHILE ASEMBLY	29/08/2019	JOSE MANUEL
3.0	CHILE ASEMBLY (Specific cabinets for M2CAM & PfAux)	17/09/2019	JOSE MANUEL
Review	Review description	Date	Reviewed

Drew by: J.M.CASTAÑO
Reviewed: F.LÓPEZ GARCIA
Date: 04/05/2017
Replaces:
Replaced by:

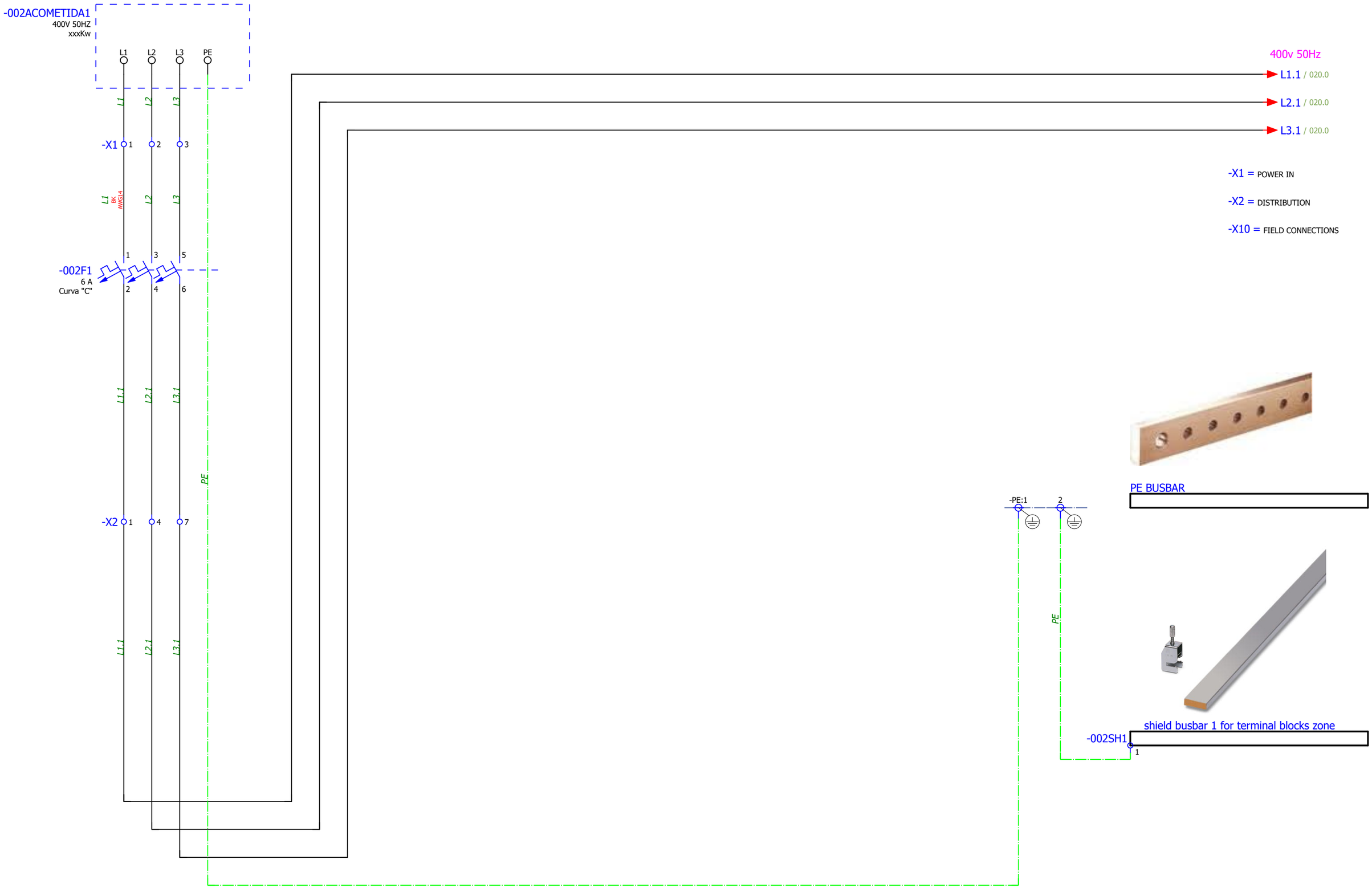

IK4 TEKNIKER Research Alliance

IK4-TEKNIKER
AVDA. OTAOLA 20
20600 Eibar (Gipuzkoa) Spain
Tfno.:(+34) 943 206744
Fax: (+34) 943 202757
Web: www.tekniker.es

Date	21/02/2018	2.0	29/08/2019	JOSE MANUEL				
Reviewed	F.LÓPEZ GARCIA	3.0	17/09/2019	JOSE MANUEL				
Drew by	JOSE MANUEL	Review	Date	Name	Review	Date	Name	

7186-GIS_LSST 7186

LSST Global Safety Interlock System Design

Replaces | Replaced by

POWER

Customer: EMPRESARIOS AGRUPADOS

C/Magallanes, 3
28015
3098000

http://www.empresariosagrupados.es/

= E1

+ GIS-LASER-CBT0101

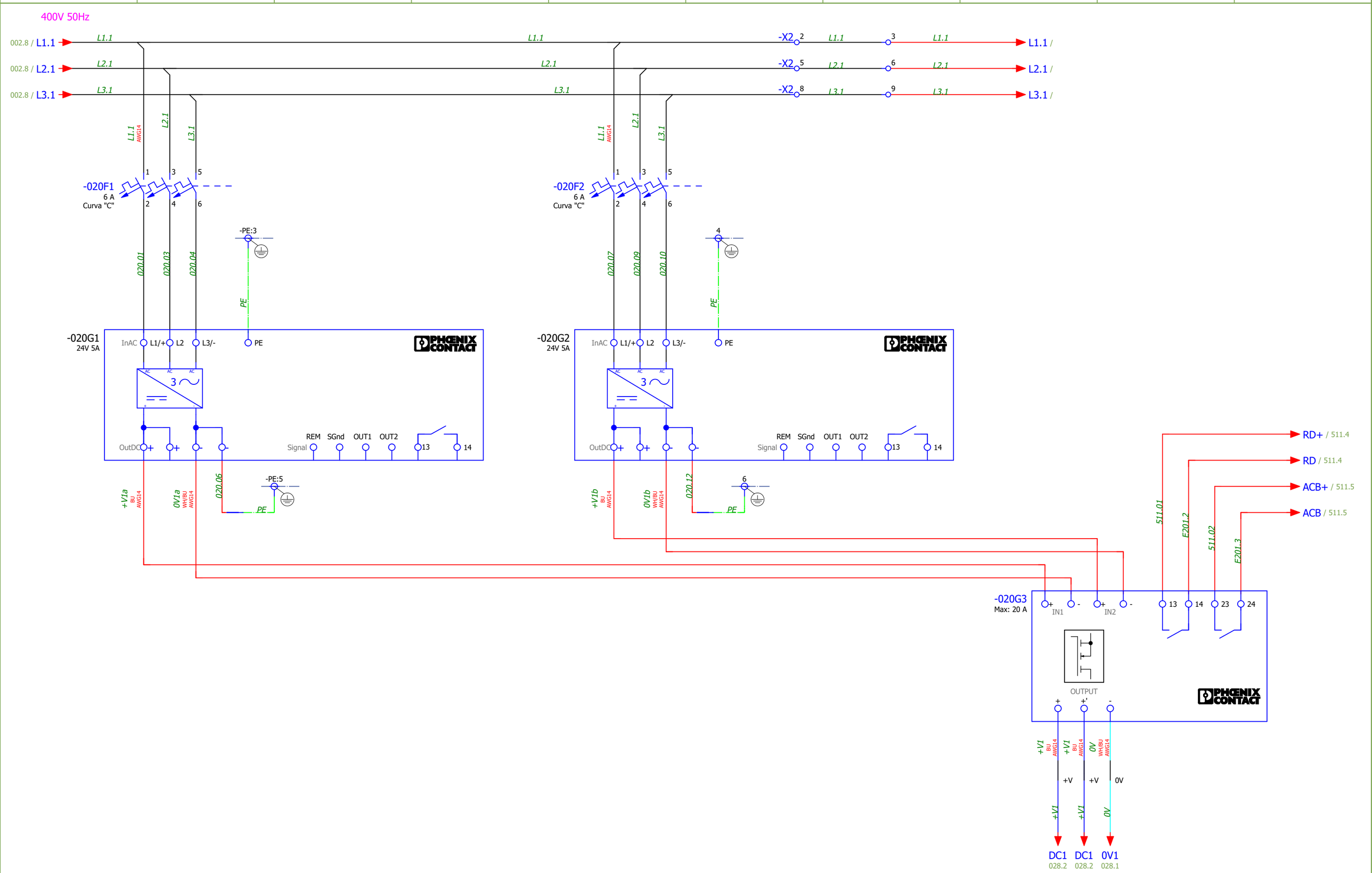

IK4 TEKNIKER Research Alliance

IK4-TEKNIKER
AVDA. OTAOLA 20
20600 Eibar (Gipuzkoa) Spain
Tfno.:(+34) 943 206744
Fax: (+34) 943 202757
Web: www.tekniker.es

Date	20/02/2018	2.0	29/08/2019	JOSE MANUEL				
Reviewed	F.LÓPEZ GARCIA	3.0	17/09/2019	JOSE MANUEL				
Drew by	JOSE MANUEL	Review	Date	Name	Review	Date	Name	

7186-GIS_LSST 7186

LSST Global Safety Interlock System Design

Replaces | Replaced by

DC POWER

Customer: EMPRESARIOS AGRUPADOS
C/Magallanes, 3
28015
3098000
http://www.empresariosagrupados.es/

= E1

+ GIS-LASER-CBT0101

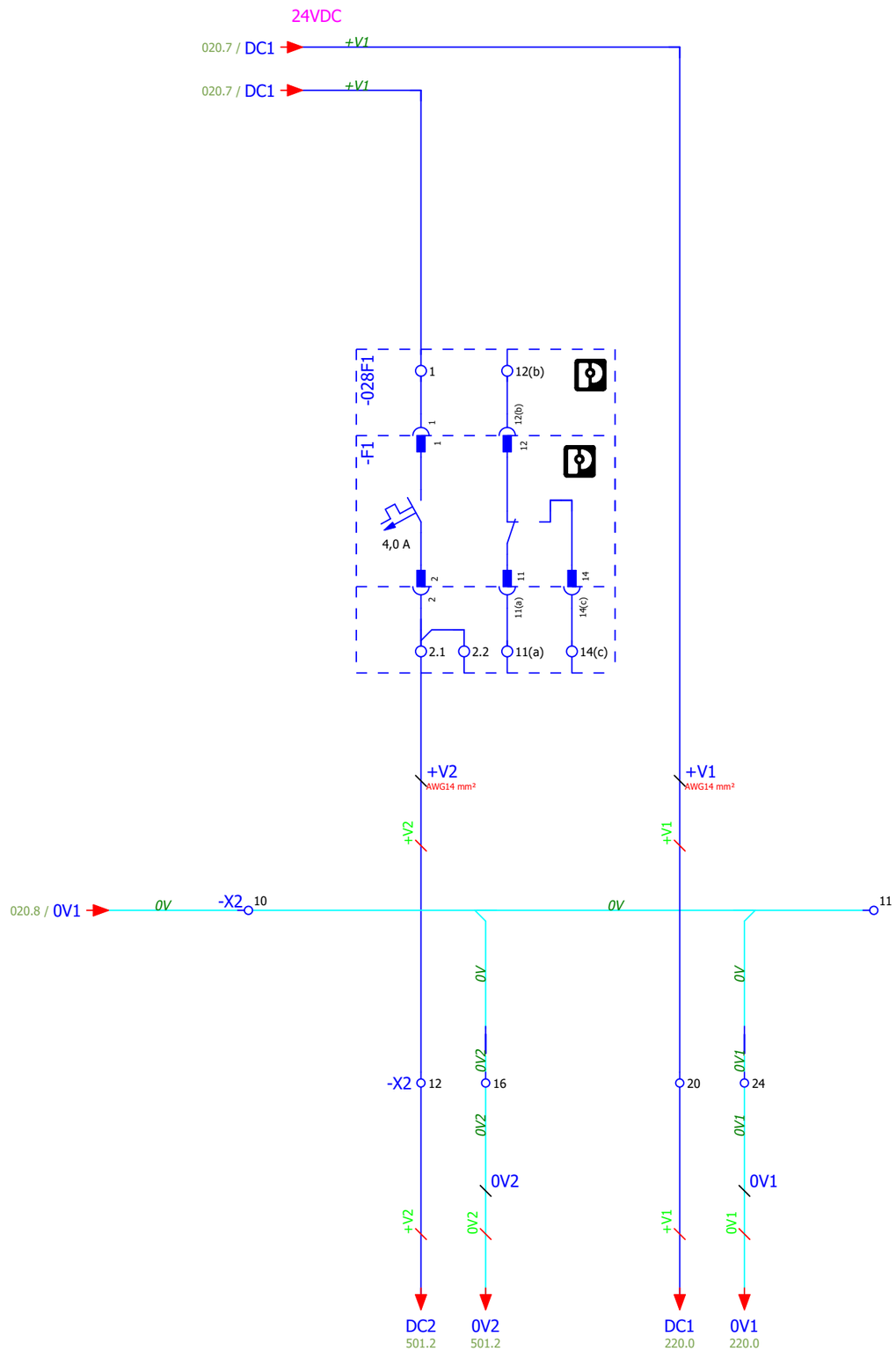

IK4 TEKNIKER Research Alliance

IK4-TEKNIKER
AVDA. OTAOLA 20
20600 Eibar (Gipuzkoa) Spain
Tfno.:(+34) 943 206744
Fax: (+34) 943 202757
Web: www.tekniker.es

Date	20/02/2018	2.0	29/08/2019	JOSE MANUEL			
Reviewed	F.LÓPEZ GARCIA	3.0	17/09/2019	JOSE MANUEL			
Drew by	JOSE MANUEL	Review	Date	Name	Review	Date	Name

7186-GIS_LSST 7186

LSST Global Safety Interlock System Design

Replaces | Replaced by

DC DISTRIBUTION

Customer: EMPRESARIOS AGRUPADOS
C/Magallanes, 3
28015
3098000
http://www.empresariosagrupados.es/

= E1
+ GIS-LASER-CBT0101

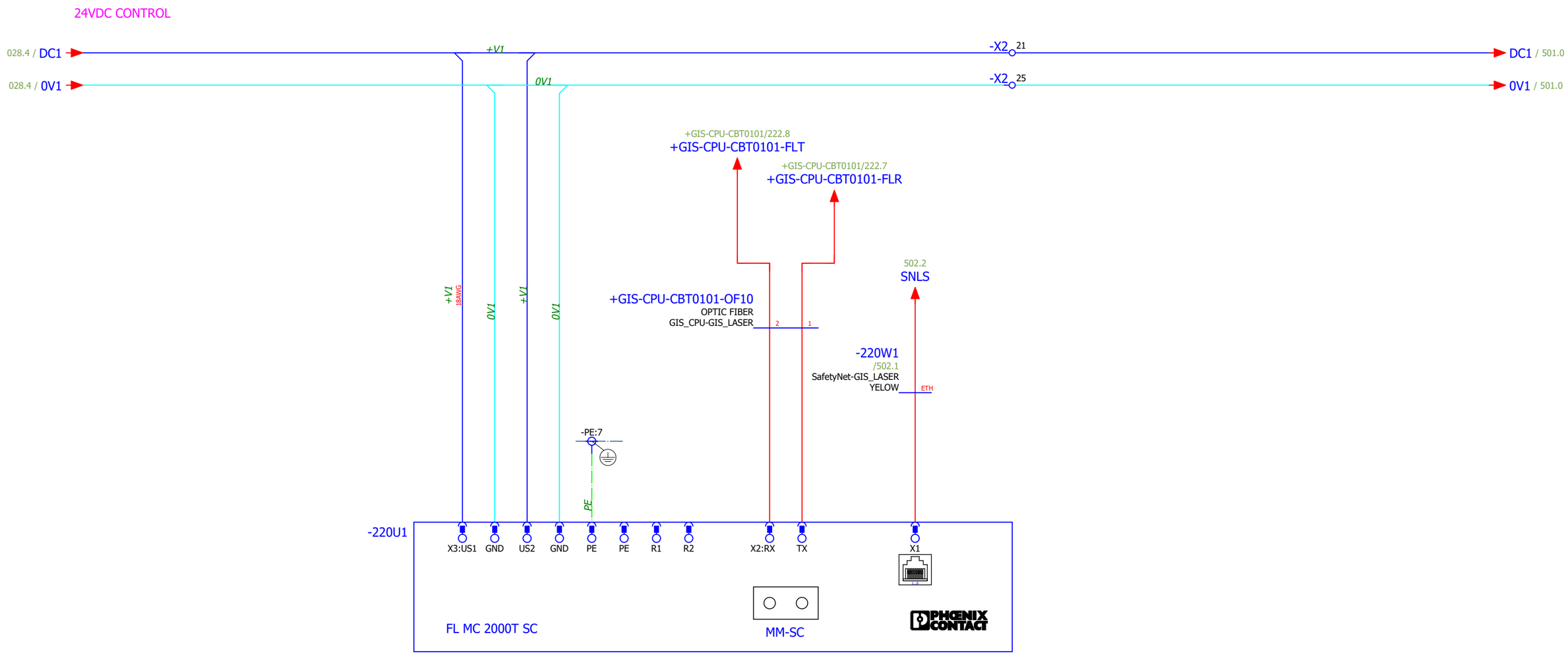

OPTIC FIBER GIS-CPU TO GIS-LASER

IK4 TEKNIKER Research Alliance
IK4-TEKNIKER
AVDA. OTAOLA 20
20600 Eibar (Gipuzkoa) Spain
Tfno.:(+34) 943 206744
Fax: (+34) 943 202757
Web: www.tekniker.es

Date	20/02/2018	2.0	29/08/2019	JOSE MANUEL				
Reviewed	F.LÓPEZ GARCIA	3.0	17/09/2019	JOSE MANUEL				
Drew by	JOSE MANUEL	Review	Date	Name	Review	Date	Name	

7186-GIS_LSST
LSST Global Safety Interlock System Design
7186

Replaces | Replaced by

MM-SC OPTIC FIBER TO RJ45 CONVERSOR

Customer: EMPRESARIOS AGRUPADOS
C/Magallanes, 3
28015
3098000
http://www.empresariosagrupados.es/

= E1
+ GIS-LASER-CBT0101

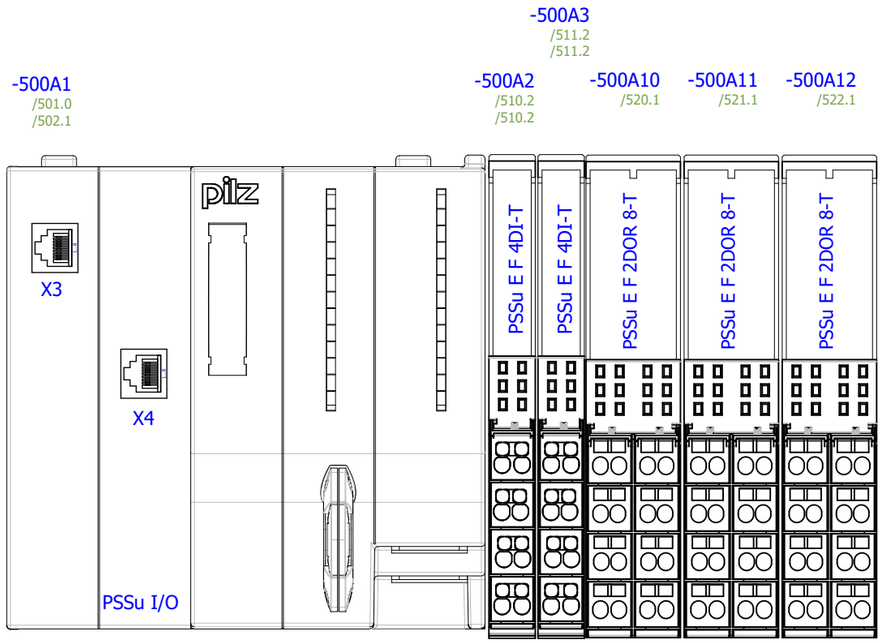

IK4 TEKNIKER Research Alliance
IK4-TEKNIKER
AVDA. OTAOLA 20
20600 Eibar (Gipuzkoa) Spain
Tfno.:(+34) 943 206744
Fax: (+34) 943 202757
Web: www.tekniker.es

Date	21/02/2018	2.0	29/08/2019	JOSE MANUEL				
Reviewed	F.LÓPEZ GARCIA	3.0	17/09/2019	JOSE MANUEL				
Drew by	JOSE MANUEL	Review	Date	Name	Review	Date	Name	

7186-GIS_LSST 7186
LSST Global Safety Interlock System Design

Replaces | Replaced by

EMERGENCY PLC PSSuniversal

Customer: EMPRESARIOS AGRUPADOS
C/Magallanes, 3
28015
3098000
http://www.empresariosagrupados.es/

= E1
+ GIS-LASER-CBT0101

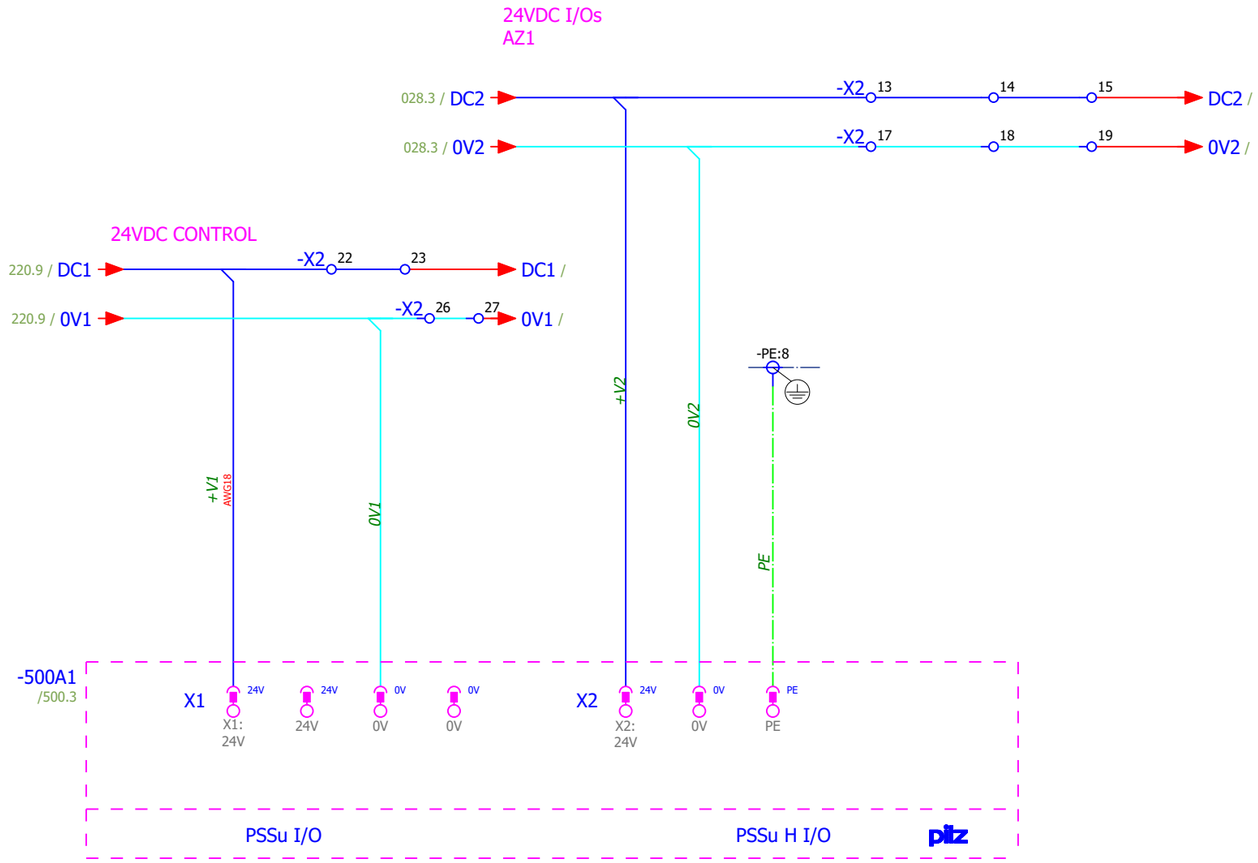

IK4 TEKNIKER Research Alliance
IK4-TEKNIKER
AVDA. OTAOLA 20
20600 Eibar (Gipuzkoa) Spain
Tfno.:(+34) 943 206744
Fax: (+34) 943 202757
Web: www.tekniker.es

Date	21/02/2018	2.0	29/08/2019	JOSE MANUEL				
Reviewed	F.LÓPEZ GARCIA	3.0	17/09/2019	JOSE MANUEL				
Drew by	JOSE MANUEL	Review	Date	Name	Review	Date	Name	

7186-GIS_LSST 7186
LSST Global Safety Interlock System Design

Replaces | Replaced by

POWER SAFETY PSS

Customer: EMPRESARIOS AGRUPADOS
C/Magallanes, 3
28015
3098000
http://www.empresariosagrupados.es/

= E1
+ GIS-LASER-CBT0101

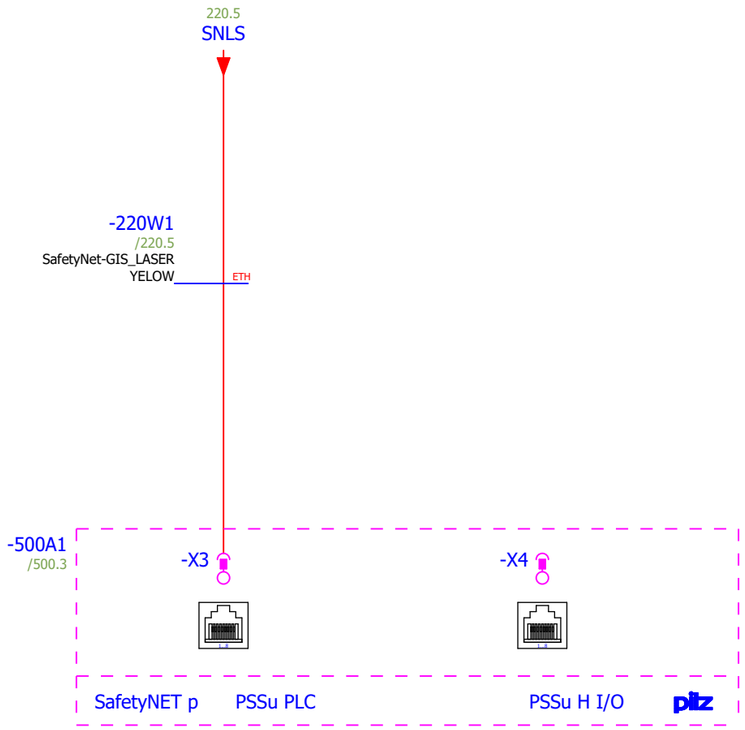

IK4 TEKNIKER Research Alliance
IK4-TEKNIKER
AVDA. OTAOLA 20
20600 Eibar (Gipuzkoa) Spain
Tfno.:(+34) 943 206744
Fax: (+34) 943 202757
Web: www.tekniker.es

Date	26/05/2017	2.0	29/08/2019	JOSE MANUEL			
Reviewed	F.LÓPEZ GARCIA	3.0	17/09/2019	JOSE MANUEL			
Drew by	JOSE MANUEL	Review	Date	Name	Review	Date	Name

7186-GIS_LSST 7186
LSST Global Safety Interlock System Design

Replaces | Replaced by

SAFETY NET

Customer: EMPRESARIOS AGRUPADOS
C/Magallanes, 3
28015
3098000
http://www.empresariosagrupados.es/

= E1
+ GIS-LASER-CBT0101

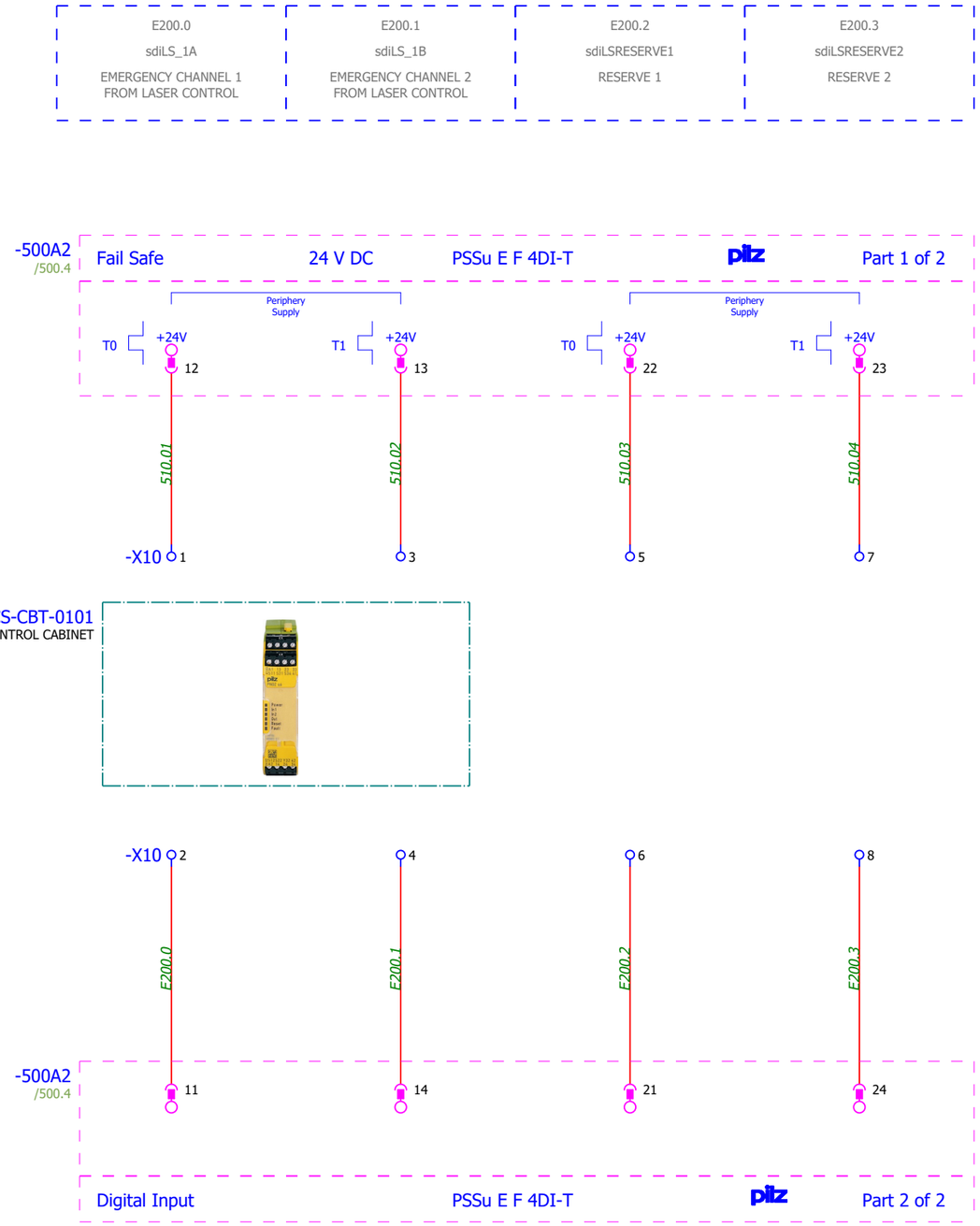

IK4 TEKNIKER Research Alliance

IK4-TEKNIKER
AVDA. OTAOLA 20
20600 Eibar (Gipuzkoa) Spain
Tfno.:(+34) 943 206744
Fax: (+34) 943 202757
Web: www.tekniker.es

Date	26/01/2018	2.0	29/08/2019	JOSE MANUEL				
Reviewed	F.LÓPEZ GARCIA	3.0	17/09/2019	JOSE MANUEL				
Drew by	JOSE MANUEL	Review	Date	Name	Review	Date	Name	

7186-GIS_LSST 7186

LSST Global Safety Interlock System Design

Replaces | Replaced by

SAFETY DIGITAL INPUTS

Customer: EMPRESARIOS AGRUPADOS
C/Magallanes, 3
28015
3098000
http://www.empresariosagrupados.es/

= E1
+ GIS-LASER-CBT0101

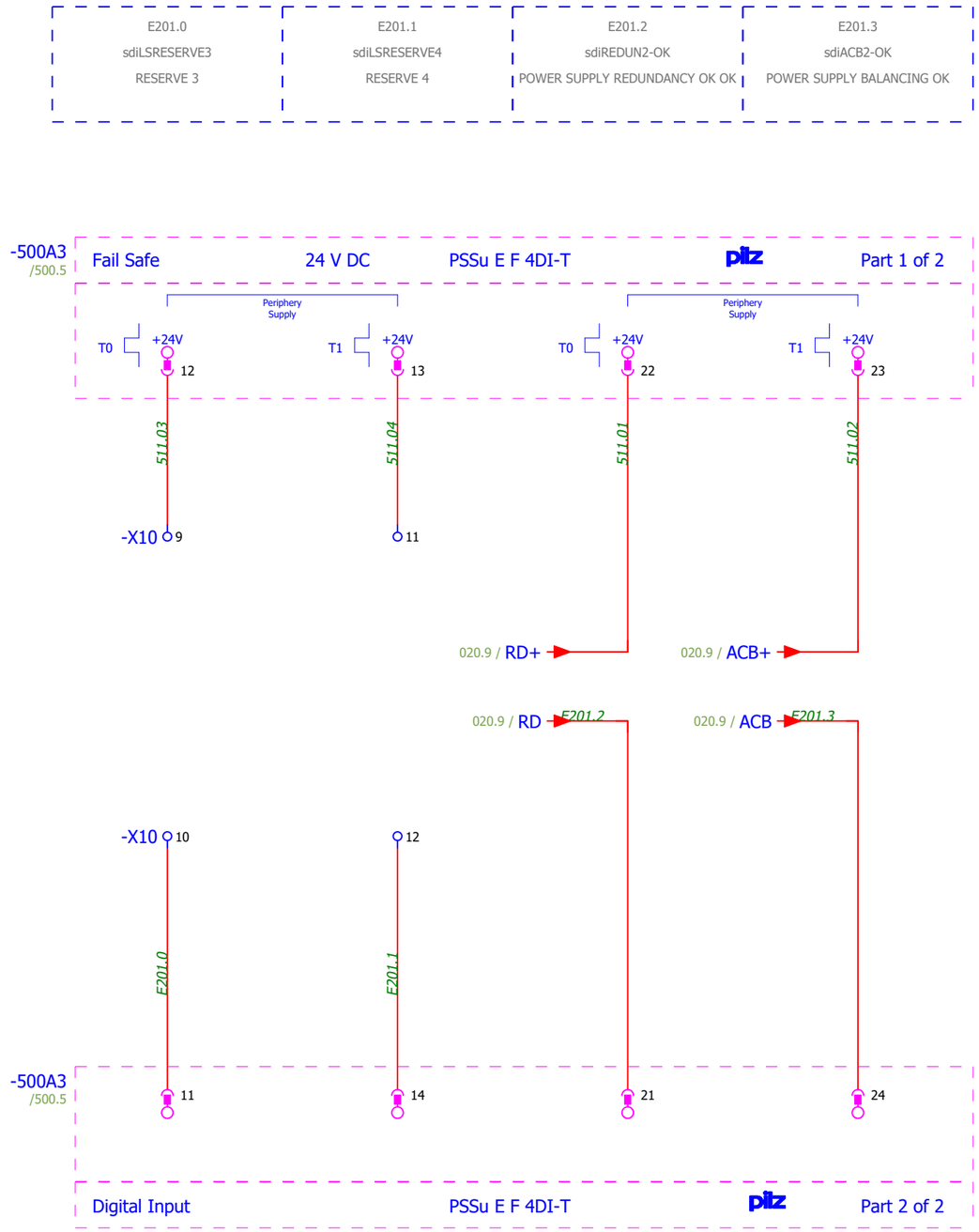

IK4 TEKNIKER Research Alliance

IK4-TEKNIKER
AVDA. OTAOLA 20
20600 Eibar (Gipuzkoa) Spain
Tfno.:(+34) 943 206744
Fax: (+34) 943 202757
Web: www.tekniker.es

Date	26/01/2018	2.0	29/08/2019	JOSE MANUEL				
Reviewed	F.LÓPEZ GARCIA	3.0	17/09/2019	JOSE MANUEL				
Drew by	JOSE MANUEL	Review	Date	Name	Review	Date	Name	

7186-GIS_LSST 7186

LSST Global Safety Interlock System Design

Replaces | Replaced by

SAFETY DIGITAL INPUTS

Customer: EMPRESARIOS AGRUPADOS

C/Magallanes, 3
28015
3098000

http://www.empresariosagrupados.es/

= E1

+ GIS-LASER-CBT0101

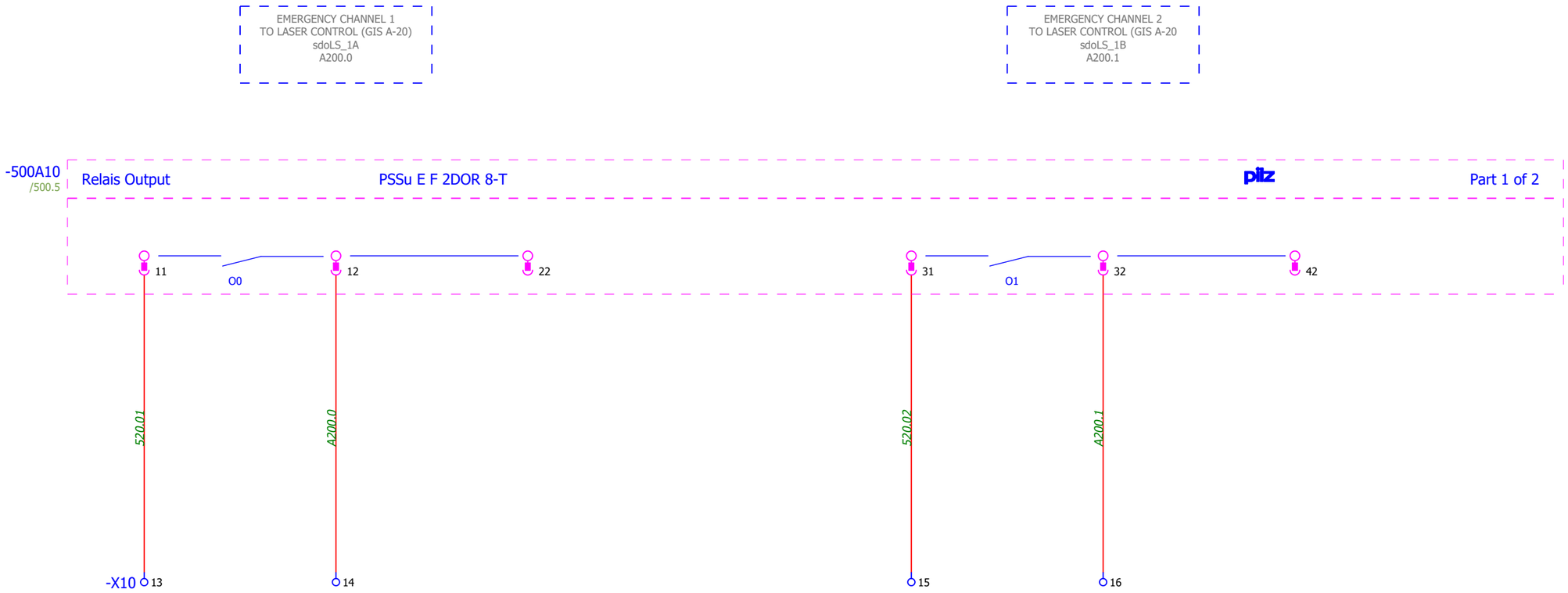
EMERGENCY CHANNEL 1
TO LASER CONTROL (GIS A-20)
sdoLS_1A
A200.0
EMERGENCY CHANNEL 2
TO LASER CONTROL (GIS A-20
sdoLS_1B
A200.1
-500A10
/500.5
Relais Output
PSSu E F 2DOR 8-T
pilz
Part 1 of 2
11
O0
12
22
31
O1
32
42
520.01
A200.0
520.02
A200.1
-X10
13
14
15
16

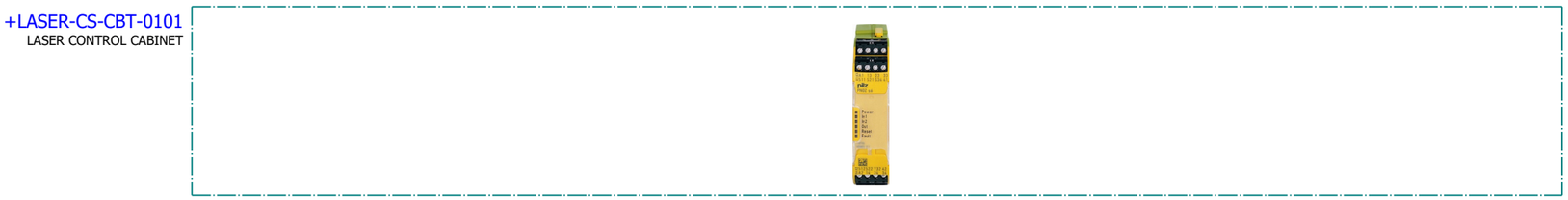
+LASER-CS-CBT-0101
LASER CONTROL CABINET

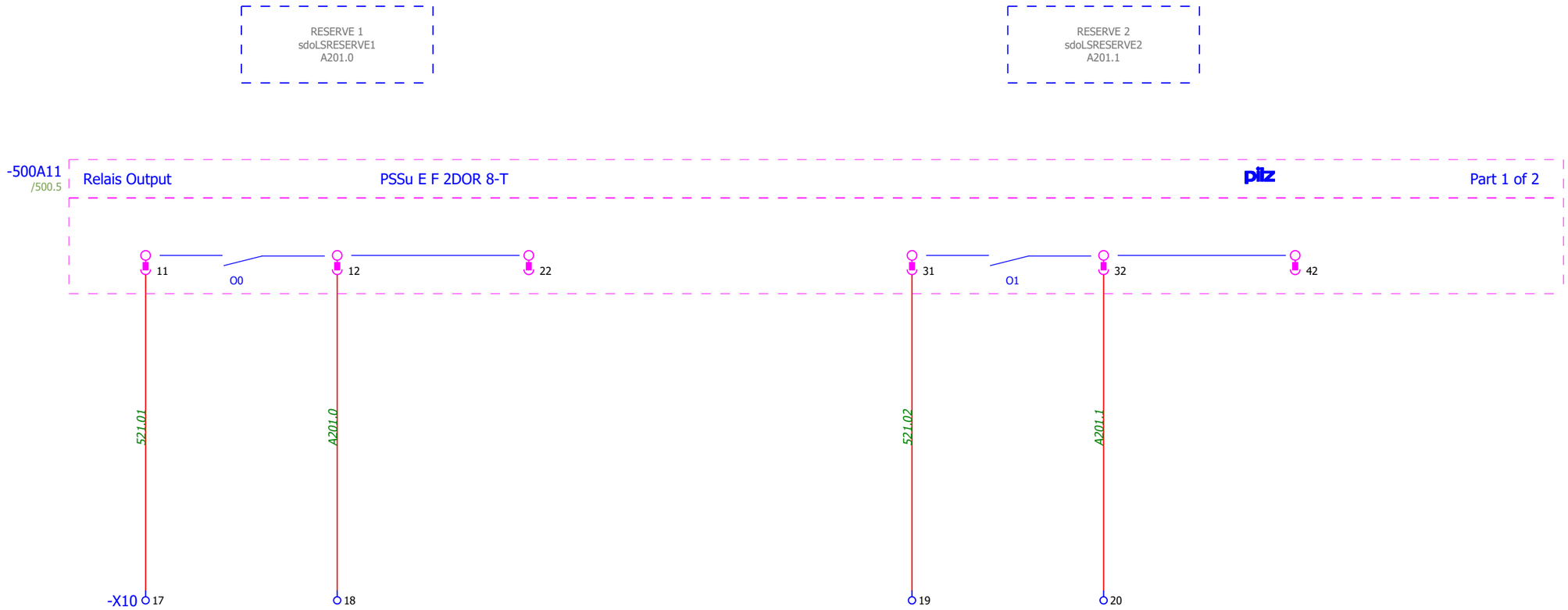

IK4 TEKNIKER Research Alliance

IK4-TEKNIKER
AVDA. OTAOLA 20
20600 Eibar (Gipuzkoa) Spain
Tfno.:(+34) 943 206744
Fax: (+34) 943 202757
Web: www.tekniker.es

Date	26/01/2018	2.0	29/08/2019	JOSE MANUEL				
Reviewed	F.LÓPEZ GARCIA	3.0	17/09/2019	JOSE MANUEL				
Drew by	JOSE MANUEL	Review	Date	Name	Review	Date	Name	

7186-GIS_LSST 7186

LSST Global Safety Interlock System Design

Replaces | Replaced by

SAFETY DIGITAL OUTPUTS

Customer: EMPRESARIOS AGRUPADOS
C/Magallanes, 3
28015
3098000
http://www.empresariosagrupados.es/

= E1
+ GIS-LASER-CBT0101

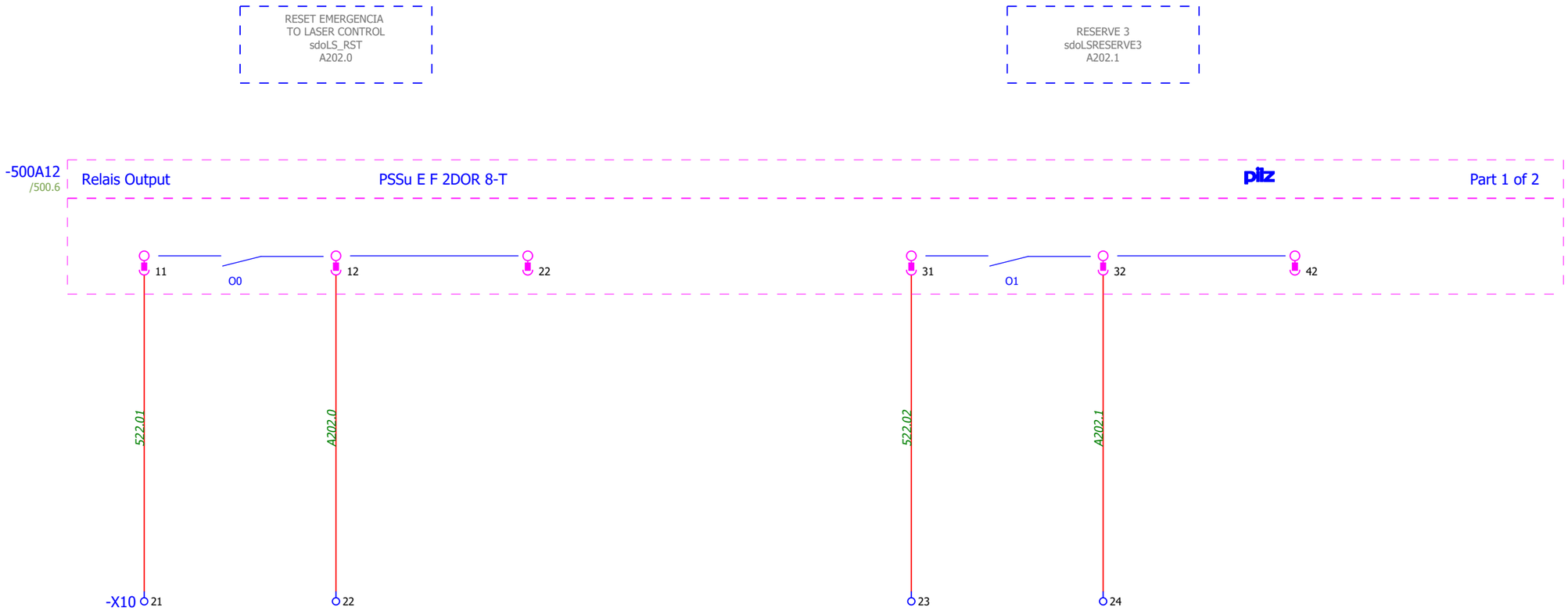

+LASER-CS-CBT-0101
LASER CONTROL CABINET

IK4 TEKNIKER Research Alliance
IK4-TEKNIKER
AVDA. OTAOLA 20
20600 Eibar (Gipuzkoa) Spain
Tfno.:(+34) 943 206744
Fax: (+34) 943 202757
Web: www.tekniker.es

Date	21/02/2018	2.0	29/08/2019	JOSE MANUEL				
Reviewed	F.LÓPEZ GARCIA	3.0	17/09/2019	JOSE MANUEL				
Drew by	JOSE MANUEL	Review	Date	Name	Review	Date	Name	

7186-GIS_LSST 7186
LSST Global Safety Interlock System Design

Replaces | Replaced by

SAFETY DIGITAL OUTPUTS

Customer: EMPRESARIOS AGRUPADOS
C/Magallanes, 3
28015
3098000
http://www.empresariosagrupados.es/

= E1
+ GIS-LASER-CBT0101

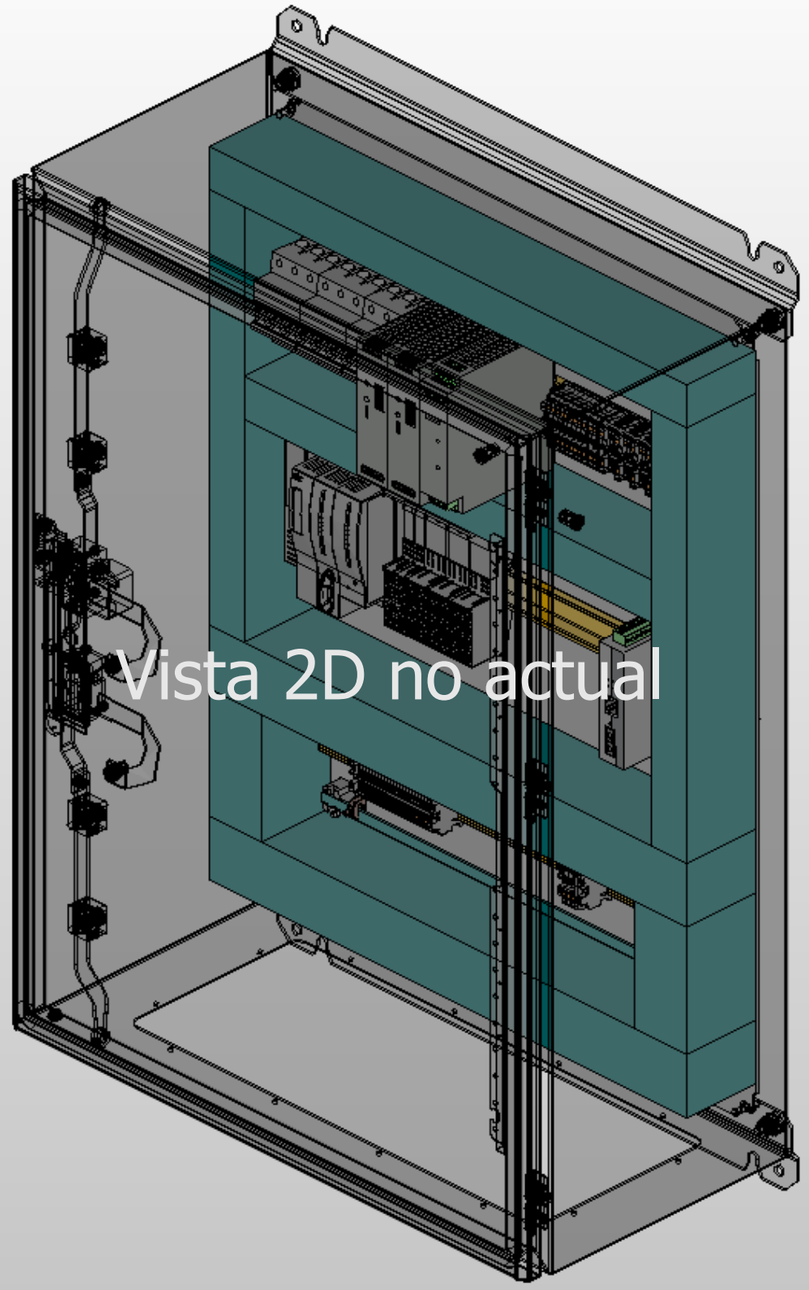

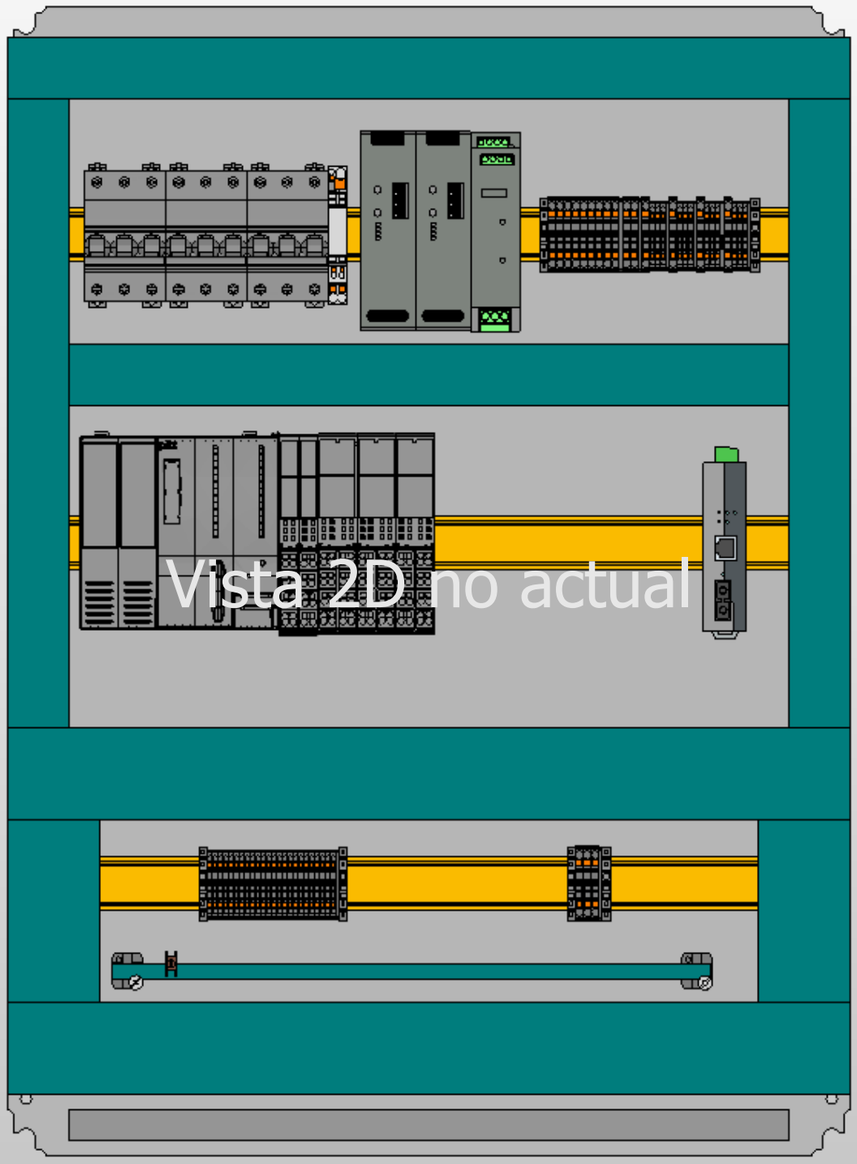

IK4 TEKNIKER Research Alliance

IK4-TEKNIKER
AVDA. OTAOLA 20
20600 Eibar (Gipuzkoa) Spain
Tfno.:(+34) 943 206744
Fax: (+34) 943 202757
Web: www.tekniker.es

Date	21/02/2018	2.0	29/08/2019	JOSE MANUEL				
Reviewed	F.LÓPEZ GARCIA	3.0	17/09/2019	JOSE MANUEL				
Drew by	JOSE MANUEL	Review	Date	Name	Review	Date	Name	

7186-GIS_LSST 7186
LSST Global Safety Interlock System Design

Replaces | Replaced by

CABINET GENERAL VIEW

Customer: EMPRESARIOS AGRUPADOS
C/Magallanes, 3
28015
3098000
http://www.empresariosagrupados.es/

= E1
+ GIS-LASER-CBT0101

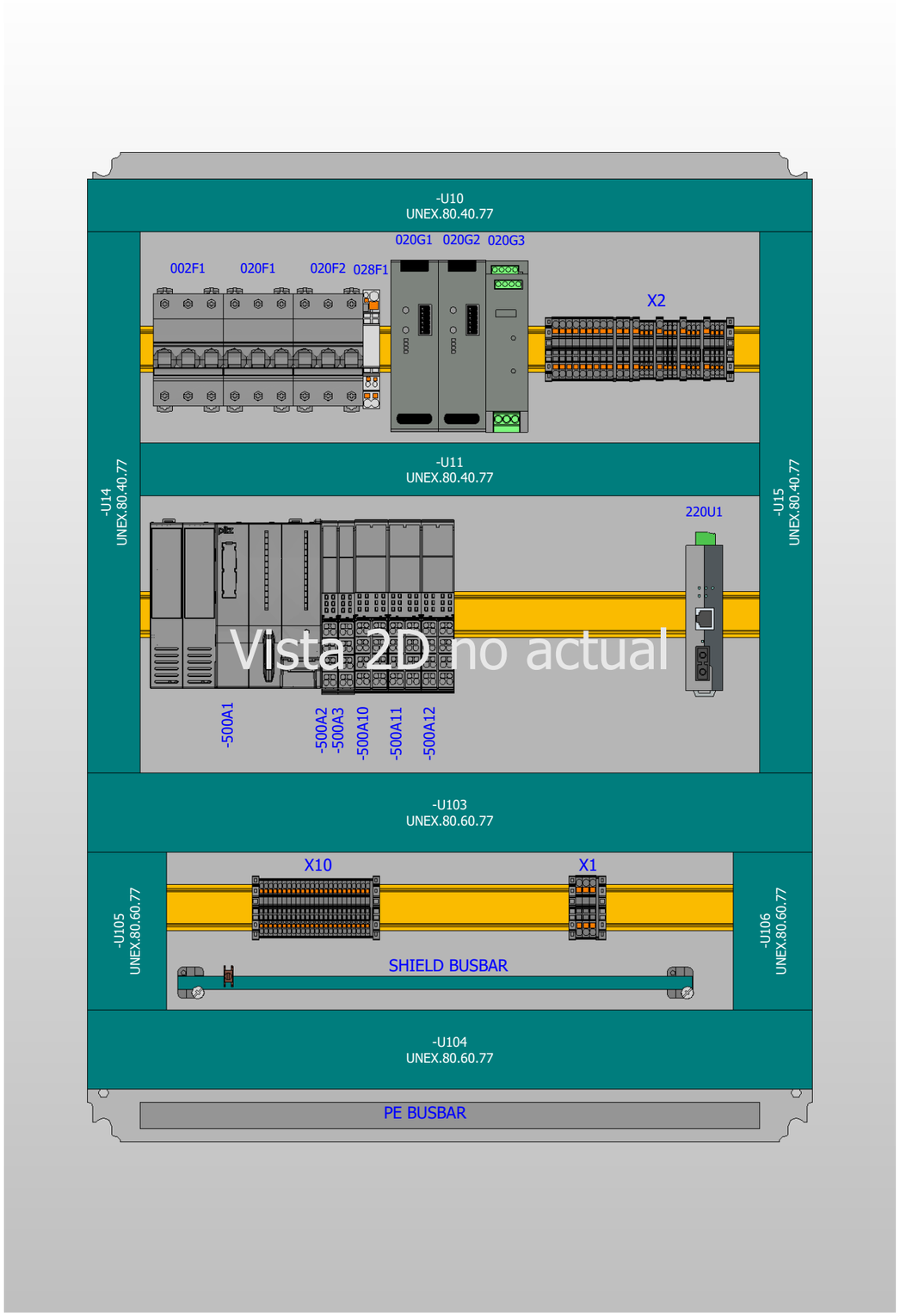
-U10
UNEX.80.40.77
020G1 020G2 020G3
002F1 020F1 020F2 028F1
X2
-U11
UNEX.80.40.77
-U14
UNEX.80.40.77
-U15
UNEX.80.40.77
220U1
-500A1
-500A2
-500A3
-500A10
-500A11
-500A12
-U103
UNEX.80.60.77
X10
X1
-U105
UNEX.80.60.77
-U106
UNEX.80.60.77
SHIELD BUSBAR
-U104
UNEX.80.60.77
PE BUSBAR
Vista 2D no actual

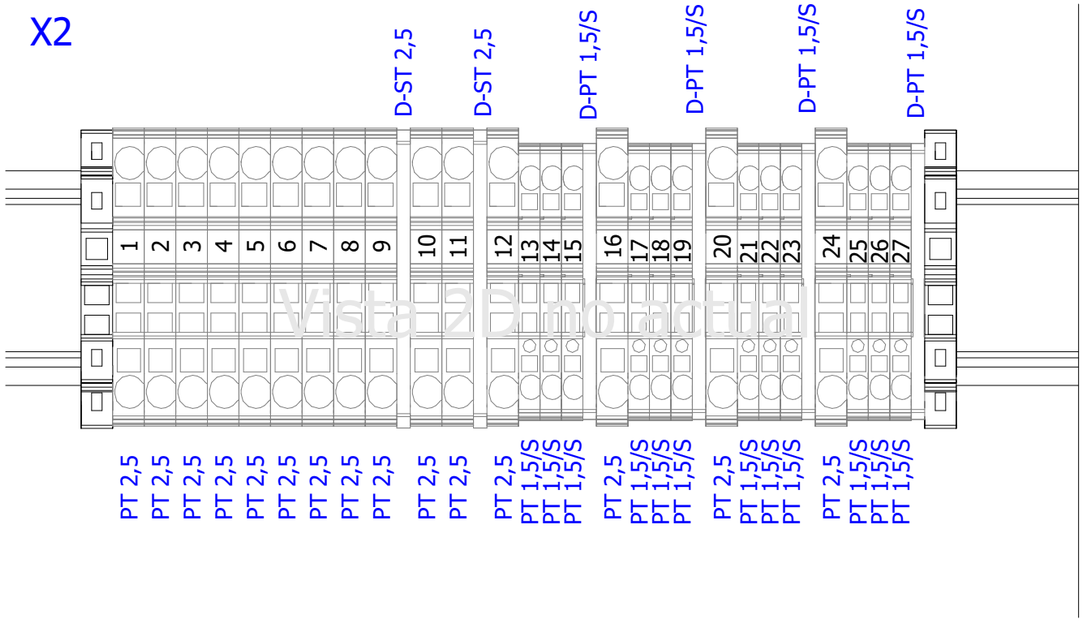
X2
D-ST 2,5
D-ST 2,5
D-PT 1,5/S
D-PT 1,5/S
D-PT 1,5/S
D-PT 1,5/S
1 2 3 4 5 6 7 8 9 10 11 12 13 14 15 16 17 18 19 20 21 22 23 24 25 26 27
PT 2,5
PT 1,5/S
Vista 2D no actual

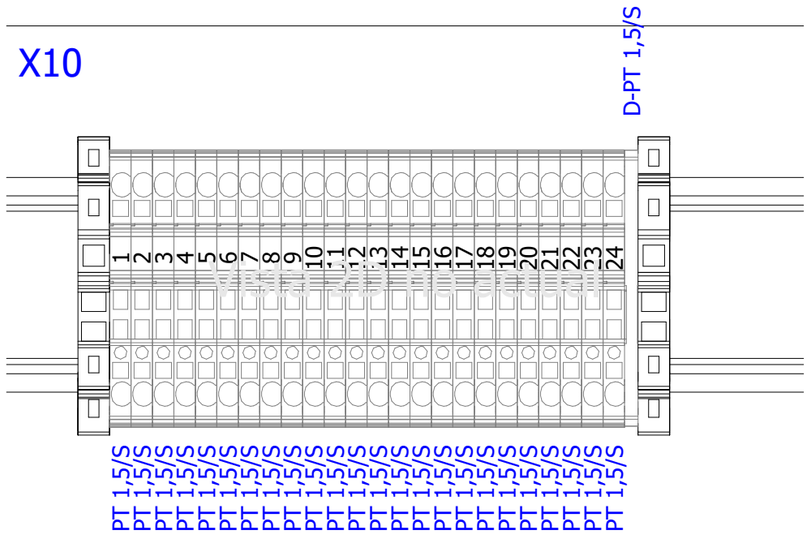
X10
D-PT 1,5/S
1 2 3 4 5 6 7 8 9 10 11 12 13 14 15 16 17 18 19 20 21 22 23 24
PT 1,5/S
Vista 2D no actual

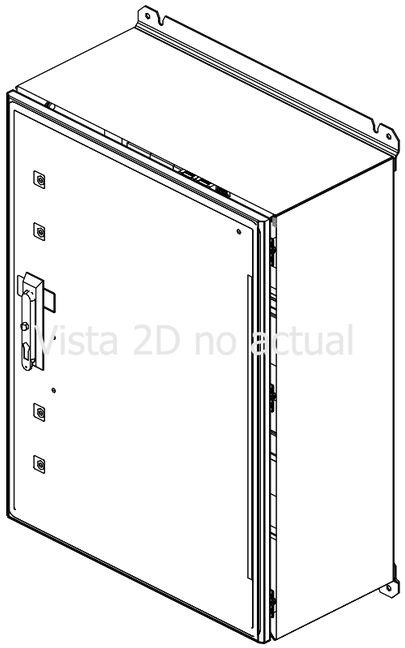

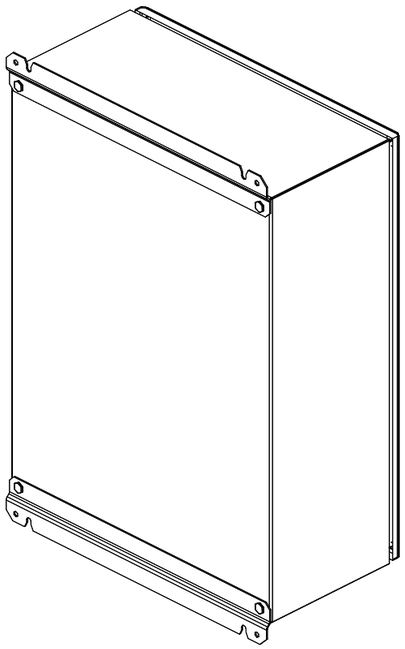

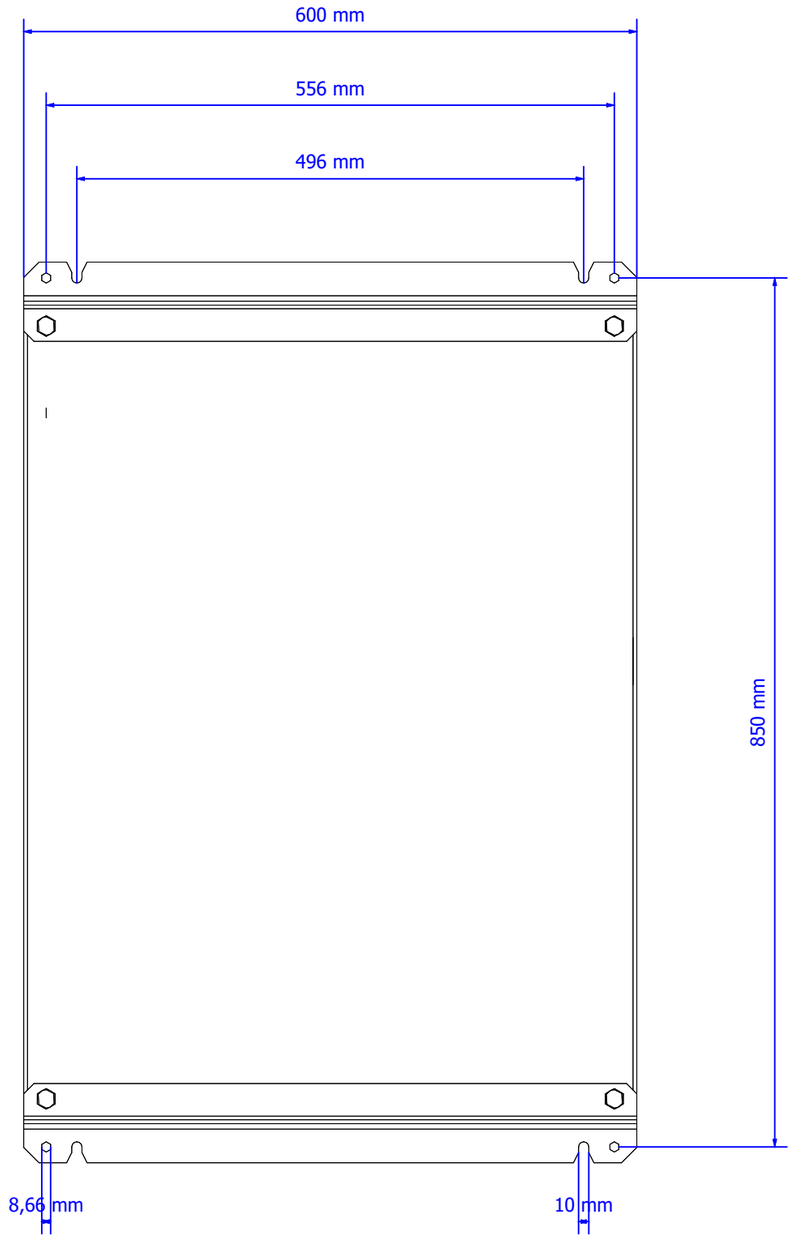

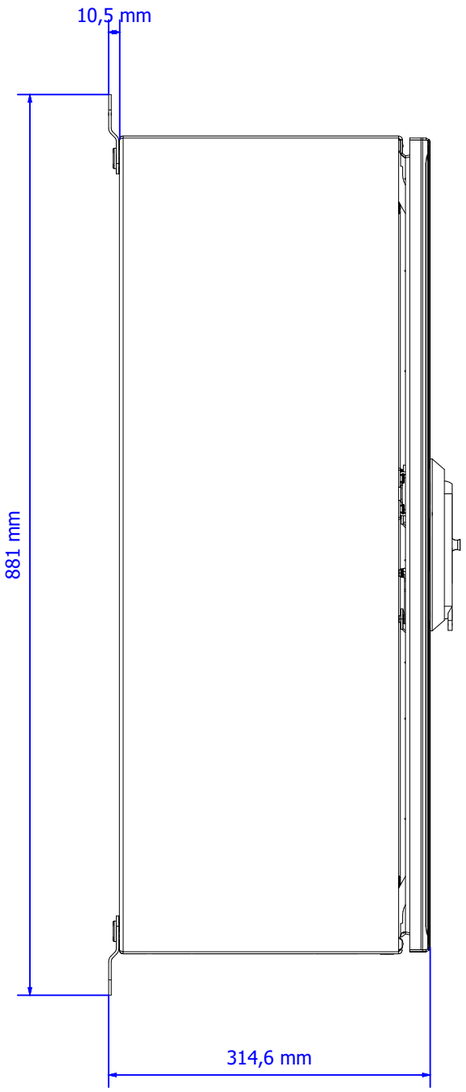

IK4 TEKNIKER Research Alliance
IK4-TEKNIKER
AVDA. OTAOLA 20
20600 Eibar (Gipuzkoa) Spain
Tfno.:(+34) 943 206744
Fax: (+34) 943 202757
Web: www.tekniker.es

Date	21/02/2018	2.0	29/08/2019	JOSE MANUEL				
Reviewed	F.LÓPEZ GARCIA	3.0	17/09/2019	JOSE MANUEL				
Drew by	JOSE MANUEL	Review	Date	Name	Review	Date	Name	

7186-GIS_LSST 7186
LSST Global Safety Interlock System Design

Replaces | Replaced by

CABINET DIMENSIONS

Customer: EMPRESARIOS AGRUPADOS
C/Magallanes, 3
28015
3098000
http://www.empresariosagrupados.es/

= E1
+ GIS-LASER-CBT0101

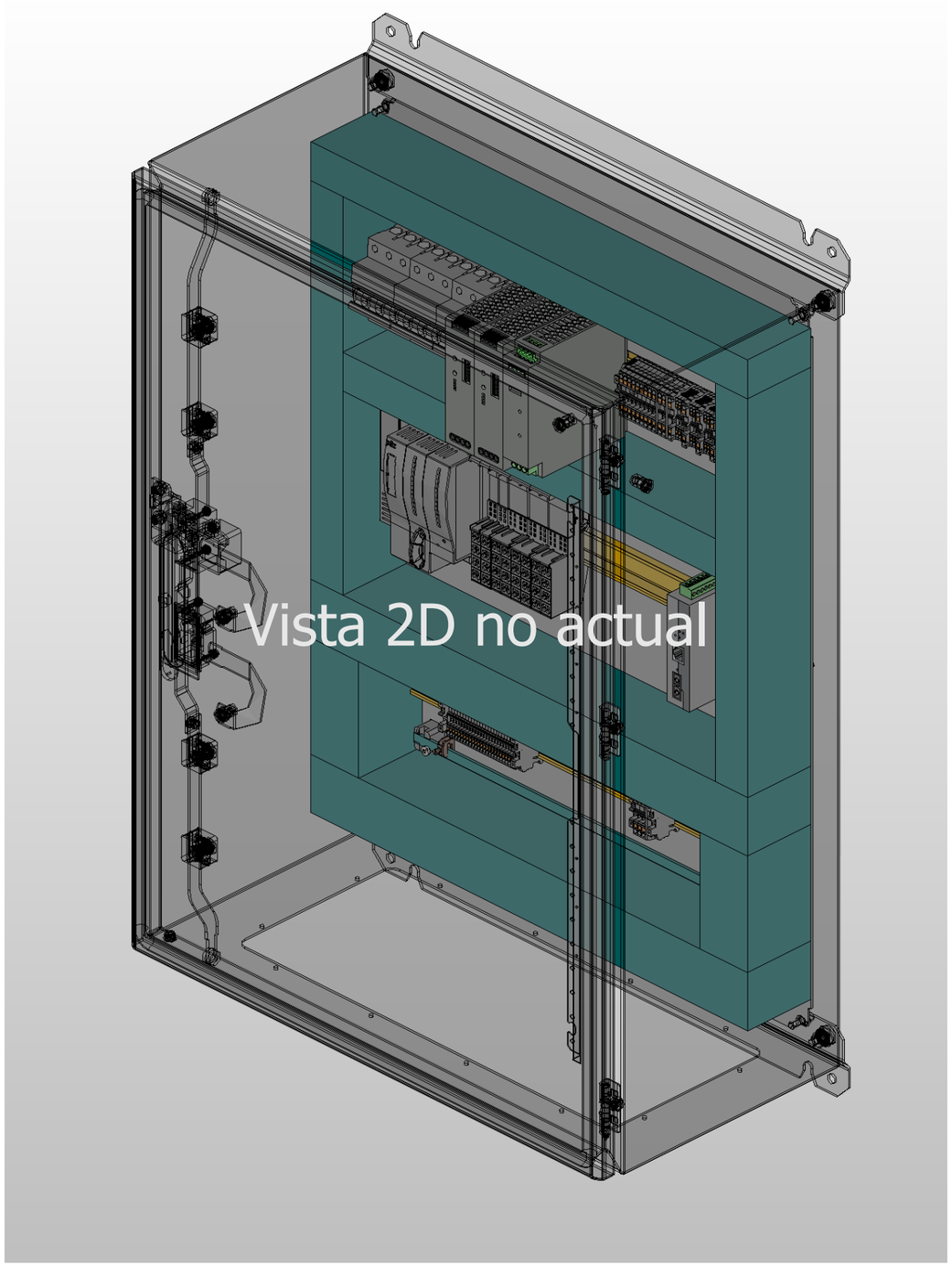

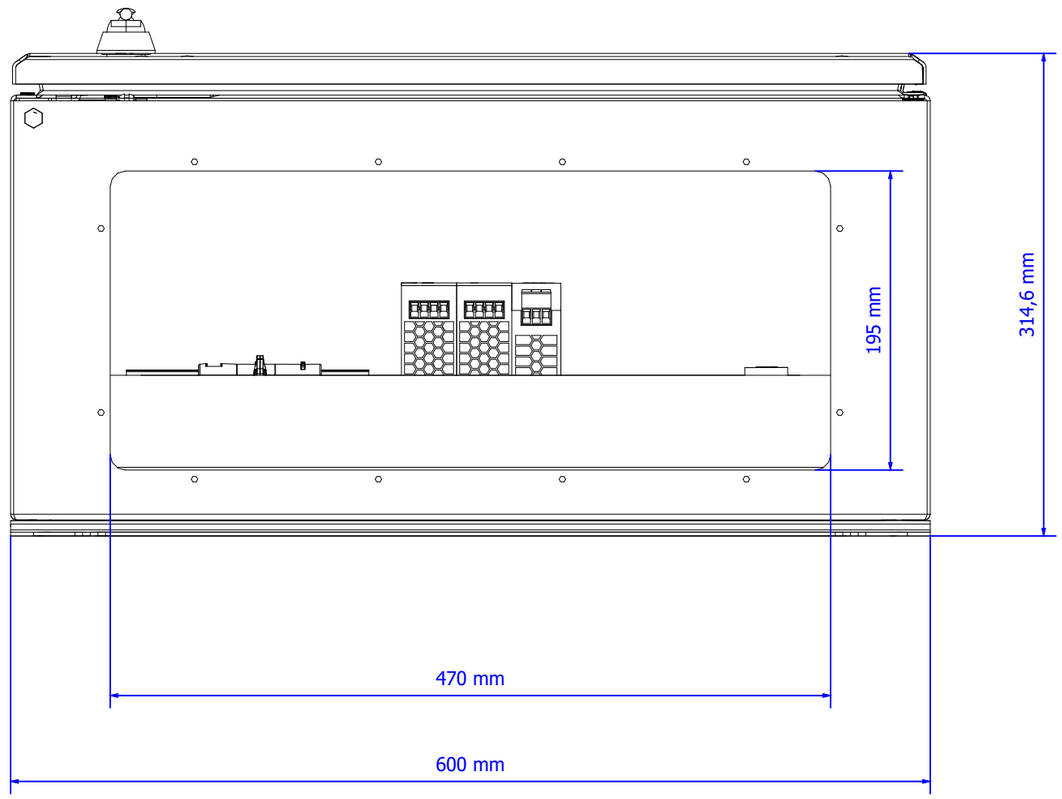

IK4 TEKNIKER Research Alliance
IK4-TEKNIKER
AVDA. OTAOLA 20
20600 Eibar (Gipuzkoa) Spain
Tfno.:(+34) 943 206744
Fax: (+34) 943 202757
Web: www.tekniker.es

Date	21/02/2018	2.0	29/08/2019	JOSE MANUEL				
Reviewed	F.LÓPEZ GARCIA	3.0	17/09/2019	JOSE MANUEL				
Drew by	JOSE MANUEL	Review	Date	Name	Review	Date	Name	

7186-GIS_LSST 7186
LSST Global Safety Interlock System Design

Replaces | Replaced by

CABLE ENTRANCE DIMENSIONS

Customer: EMPRESARIOS AGRUPADOS
C/Magallanes, 3
28015
3098000
http://www.empresariosagrupados.es/

= E1
+ GIS-LASER-CBT0101

Customer

EMPRESARIOS AGRUPADOS

EMPRESARIOS AGRUPADOS
C/Magallanes, 3
28015
ESPAÑA
3098000

http://www.empresariosagrupados.es/

Project:

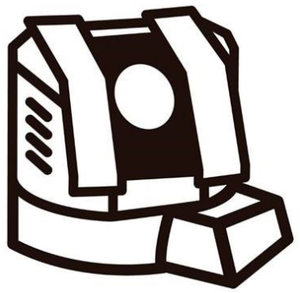

7186-GIS_LSST
7186
LSST Global Safety Interlock System Design

E1
MACHINE

GIS-M2CAM-CBT0101
GIS M2 CAMERA CABINET

Number of pages: 178

Made by:

IK4-TEKNIKER
AVDA. OTAOLA 20
20600 Eibar (Gipuzkoa) Spain
Tfno. : (+34) 943 206744
Fax : (+34) 943 202757
Web: www.tekniker.es

2.0	CHILE ASEMBLY	29/08/2019	JOSE MANUEL
3.0	CHILE ASEMBLY (Specific cabinets for M2CAM & PfAux)	17/09/2019	JOSE MANUEL
Review	Review description	Date	Reviewed

Drew by:	J.M.CASTAÑO
Reviewed:	F.LÓPEZ GARCIA
Date:	04/05/2017
Replaces:	
Replaced by:	

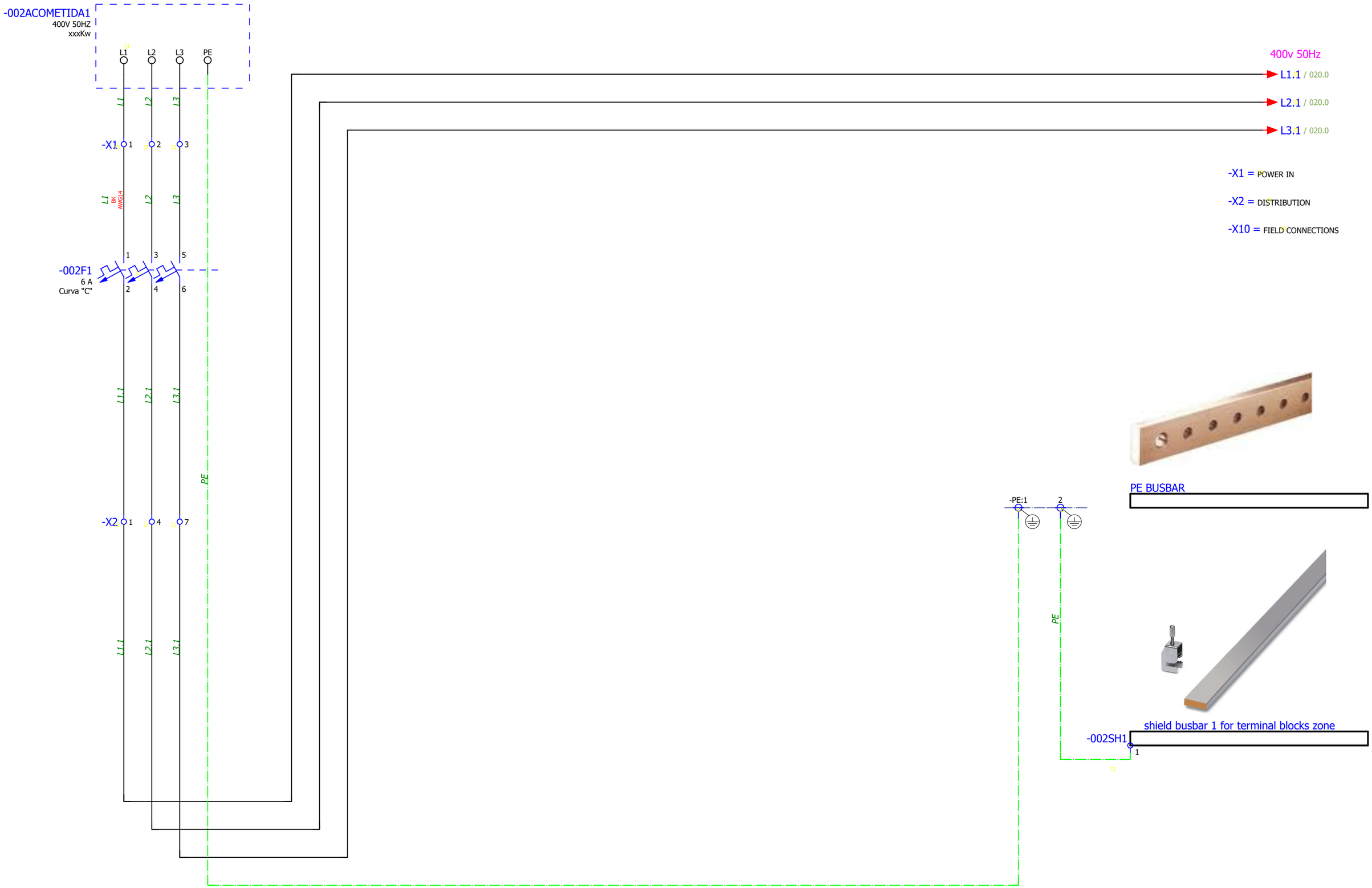

IK4 TEKNIKER Research Alliance

IK4-TEKNIKER
AVDA. OTAOLA 20
20600 Eibar (Gipuzkoa) Spain
Tfno.:(+34) 943 206744
Fax: (+34) 943 202757
Web: www.tekniker.es

Date	30/08/2022	2.0	29/08/2019	JOSE MANUEL				
Reviewed	F.LÓPEZ GARCIA	3.0	17/09/2019	JOSE MANUEL				
Drew by	JOSE MANUEL	Review	Date	Name	Review	Date	Name	

7186-GIS_LSST 7186

LSST Global Safety Interlock System Design

Replaces | Replaced by

POWER

Customer: EMPRESARIOS AGRUPADOS
C/Magallanes, 3
28015
3098000
http://www.empresariosagrupados.es/

= E1

+ GIS-M2CAM-CBT0101

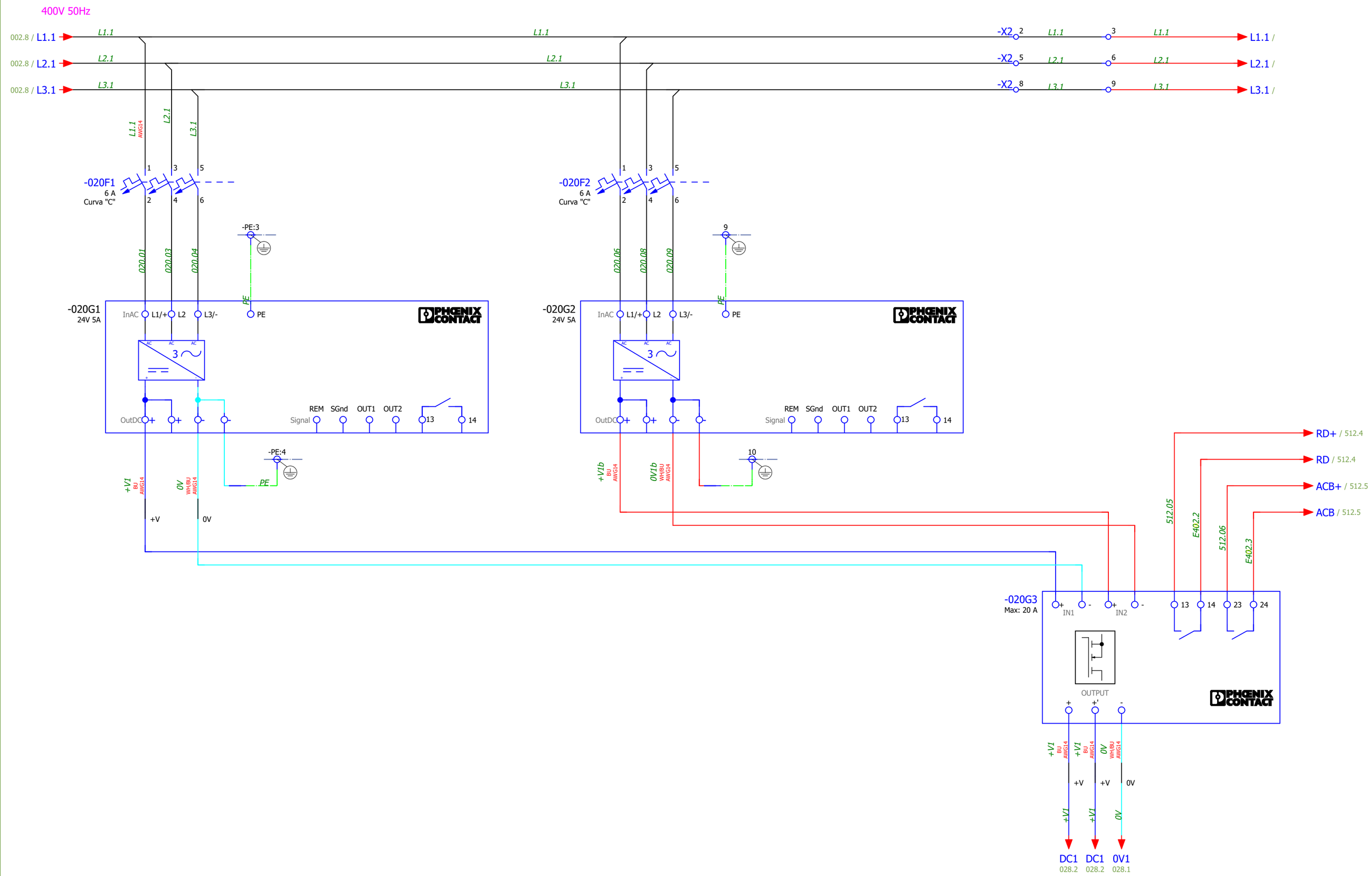

IK4 TEKNIKER Research Alliance

IK4-TEKNIKER
AVDA. OTAOLA 20
20600 Eibar (Gipuzkoa) Spain
Tfno.:(+34) 943 206744
Fax: (+34) 943 202757
Web: www.tekniker.es

Date	30/08/2022	2.0	29/08/2019	JOSE MANUEL				
Reviewed	F.LÓPEZ GARCIA	3.0	17/09/2019	JOSE MANUEL				
Drew by	JOSE MANUEL	Review	Date	Name	Review	Date	Name	

7186-GIS_LSST 7186

LSST Global Safety Interlock System Design

Replaces | Replaced by

DC POWER

Customer: EMPRESARIOS AGRUPADOS
C/Magallanes, 3
28015
3098000
http://www.empresariosagrupados.es/

= E1
+ GIS-M2CAM-CBT0101

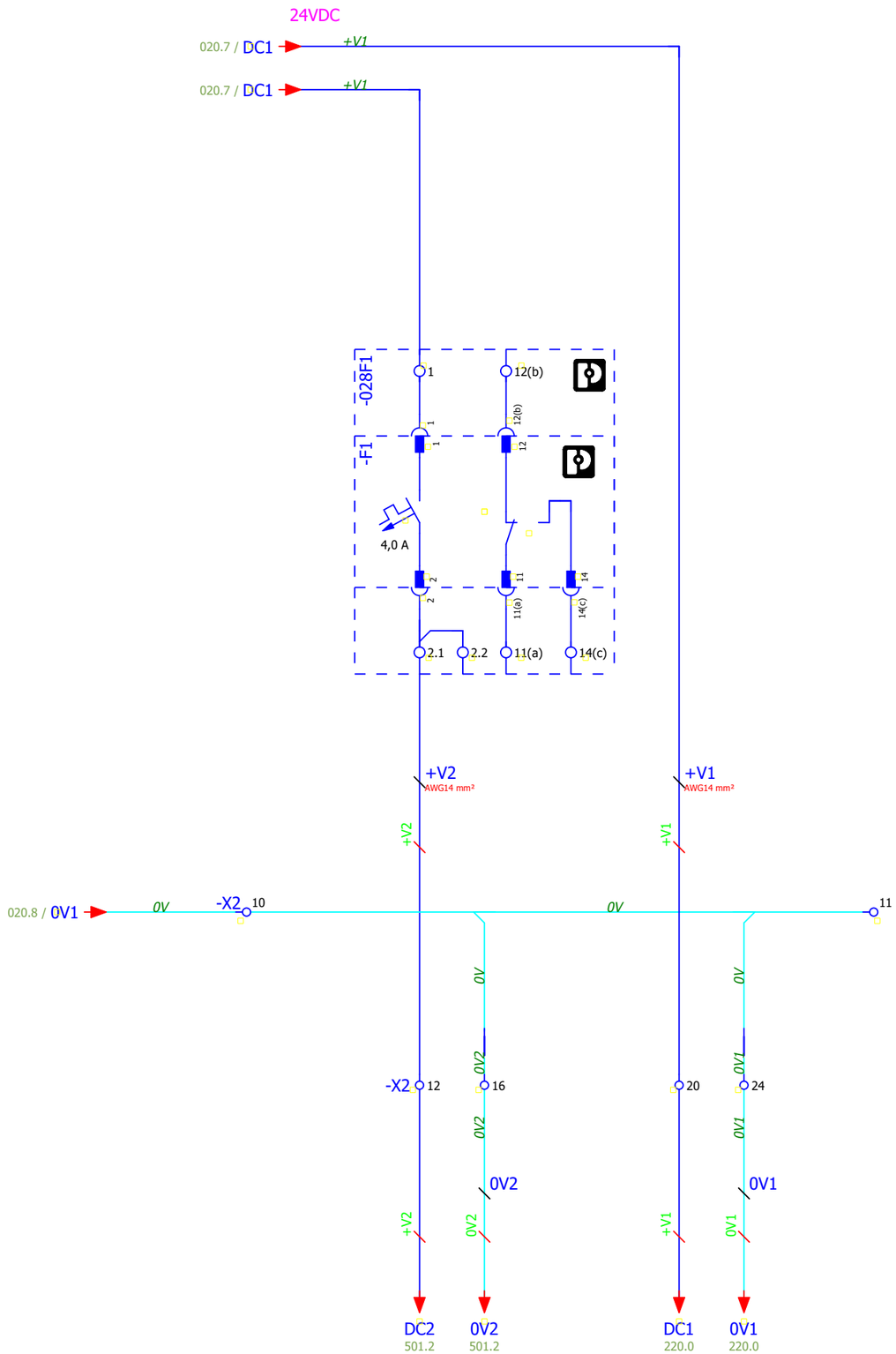

IK4 TEKNIKER Research Alliance

IK4-TEKNIKER
AVDA. OTAOLA 20
20600 Eibar (Gipuzkoa) Spain
Tfno.:(+34) 943 206744
Fax: (+34) 943 202757
Web: www.tekniker.es

Date	30/08/2022	2.0	29/08/2019	JOSE MANUEL			
Reviewed	F.LÓPEZ GARCIA	3.0	17/09/2019	JOSE MANUEL			
Drew by	JOSE MANUEL	Review	Date	Name	Review	Date	Name

7186-GIS_LSST 7186

LSST Global Safety Interlock System Design

Replaces | Replaced by

DC DISTRIBUTION

Customer: EMPRESARIOS AGRUPADOS
C/Magallanes, 3
28015
3098000
http://www.empresariosagrupados.es/

= E1
+ GIS-M2CAM-CBT0101

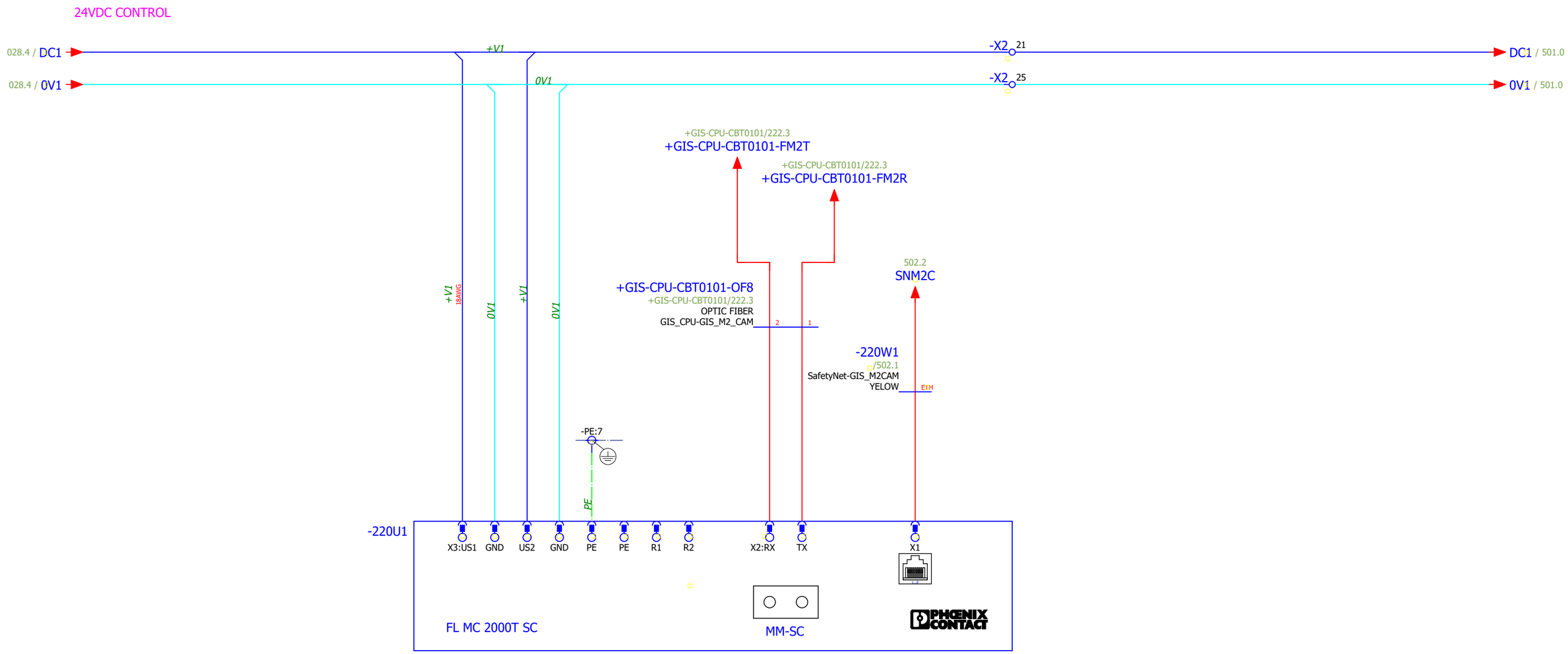

OPTIC FIBER GIS-CPU TO GIS-FIRE_EARTHQUAKE

IK4 TEKNIKER Research Alliance
IK4-TEKNIKER
AVDA. OTAOLA 20
20600 Eibar (Gipuzkoa) Spain
Tfno.:(+34) 943 206744
Fax: (+34) 943 202757
Web: www.tekniker.es

Date	30/08/2022	2.0	29/08/2019	JOSE MANUEL				
Reviewed	F.LÓPEZ GARCIA	3.0	17/09/2019	JOSE MANUEL				
Drew by	JOSE MANUEL	Review	Date	Name	Review	Date	Name	

7186-GIS_LSST
LSST Global Safety Interlock System Design
7186

Replaces | Replaced by

MM-SC OPTIC FIBER TO RJ45 CONVERSOR

Customer: EMPRESARIOS AGRUPADOS
C/Magallanes, 3
28015
3098000
http://www.empresariosagrupados.es/

= E1
+ GIS-M2CAM-CBT0101

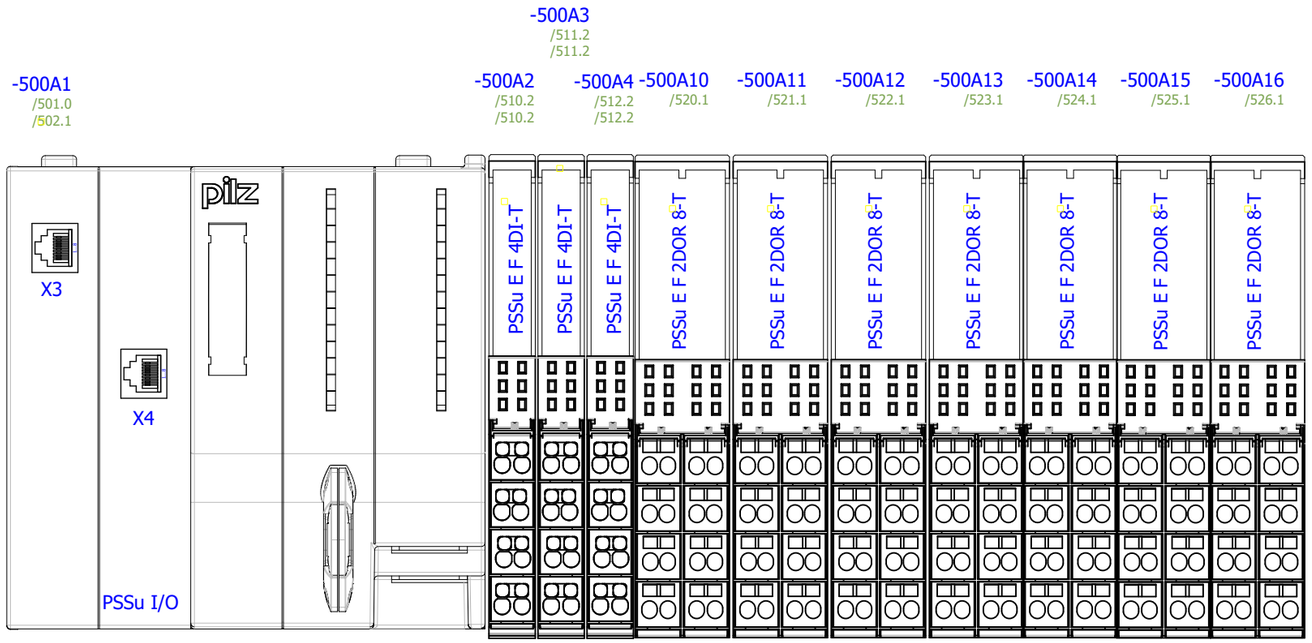

IK4 TEKNIKER Research Alliance
IK4-TEKNIKER
AVDA. OTAOLA 20
20600 Eibar (Gipuzkoa) Spain
Tfno.:(+34) 943 206744
Fax: (+34) 943 202757
Web: www.tekniker.es

Date	30/08/2022	2.0	29/08/2019	JOSE MANUEL				
Reviewed	F.LÓPEZ GARCIA	3.0	17/09/2019	JOSE MANUEL				
Drew by	JOSE MANUEL	Review	Date	Name	Review	Date	Name	

7186-GIS_LSST 7186
LSST Global Safety Interlock System Design

Replaces | Replaced by

EMERGENCY PLC PSSuniversal

Customer: EMPRESARIOS AGRUPADOS
C/Magallanes, 3
28015
3098000
http://www.empresariosagrupados.es/

= E1
+ GIS-M2CAM-CBT0101

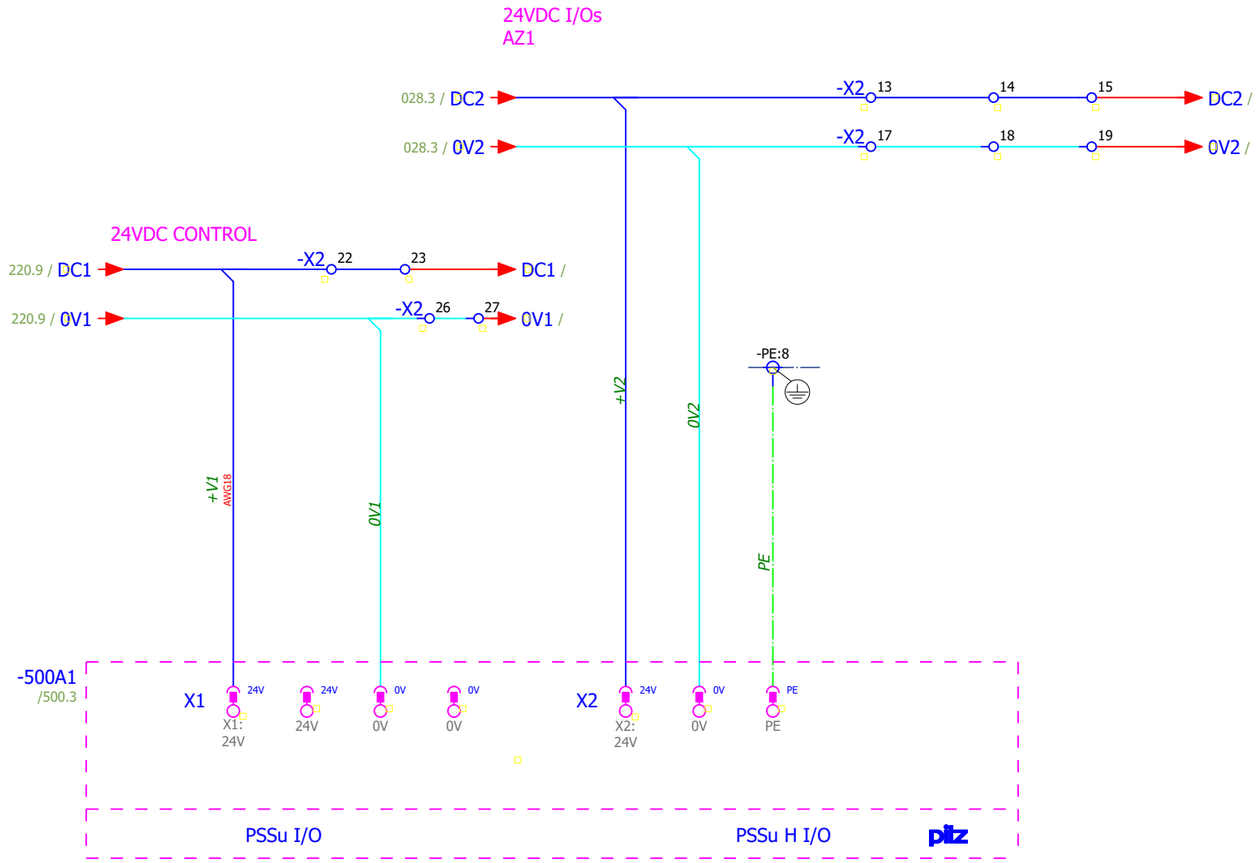

IK4 TEKNIKER Research Alliance

IK4-TEKNIKER
AVDA. OTAOLA 20
20600 Eibar (Gipuzkoa) Spain
Tfno.:(+34) 943 206744
Fax: (+34) 943 202757
Web: www.tekniker.es

Date	30/08/2022	2.0	29/08/2019	JOSE MANUEL				
Reviewed	F.LÓPEZ GARCIA	3.0	17/09/2019	JOSE MANUEL				
Drew by	JOSE MANUEL	Review	Date	Name	Review	Date	Name	

7186-GIS_LSST 7186

LSST Global Safety Interlock System Design

Replaces | Replaced by

POWER SAFETY PSS

Customer: EMPRESARIOS AGRUPADOS

C/Magallanes, 3
28015
3098000

http://www.empresariosagrupados.es/

= E1

+ GIS-M2CAM-CBT0101

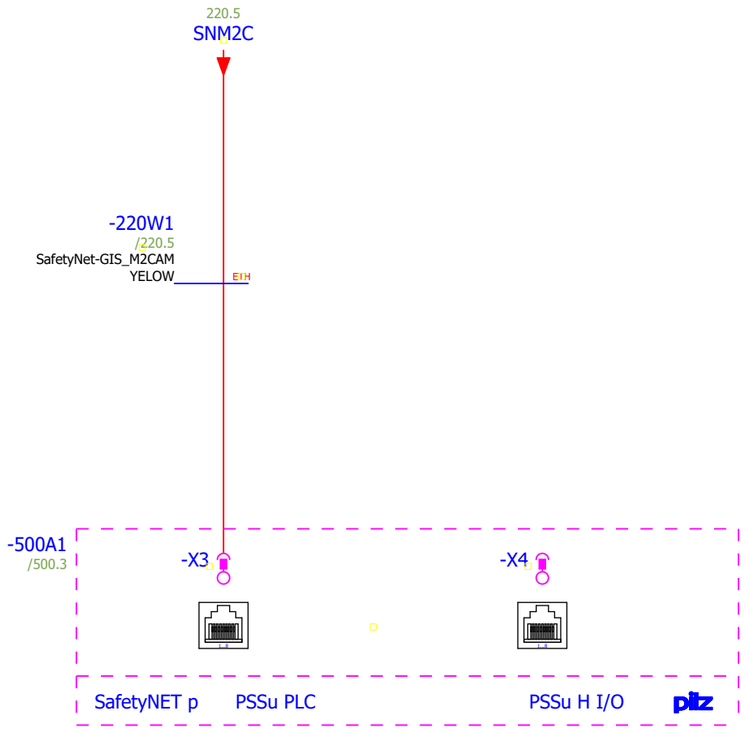

IK4 TEKNIKER Research Alliance
IK4-TEKNIKER
AVDA. OTAOLA 20
20600 Eibar (Gipuzkoa) Spain
Tfno.:(+34) 943 206744
Fax: (+34) 943 202757
Web: www.tekniker.es

Date	30/08/2022	2.0	29/08/2019	JOSE MANUEL			
Reviewed	F.LÓPEZ GARCIA	3.0	17/09/2019	JOSE MANUEL			
Drew by	JOSE MANUEL	Review	Date	Name	Review	Date	Name

7186-GIS_LSST 7186
LSST Global Safety Interlock System Design

Replaces | Replaced by

SAFETY NET

Customer: EMPRESARIOS AGRUPADOS
C/Magallanes, 3
28015
3098000
http://www.empresariosagrupados.es/

= E1
+ GIS-M2CAM-CBT0101

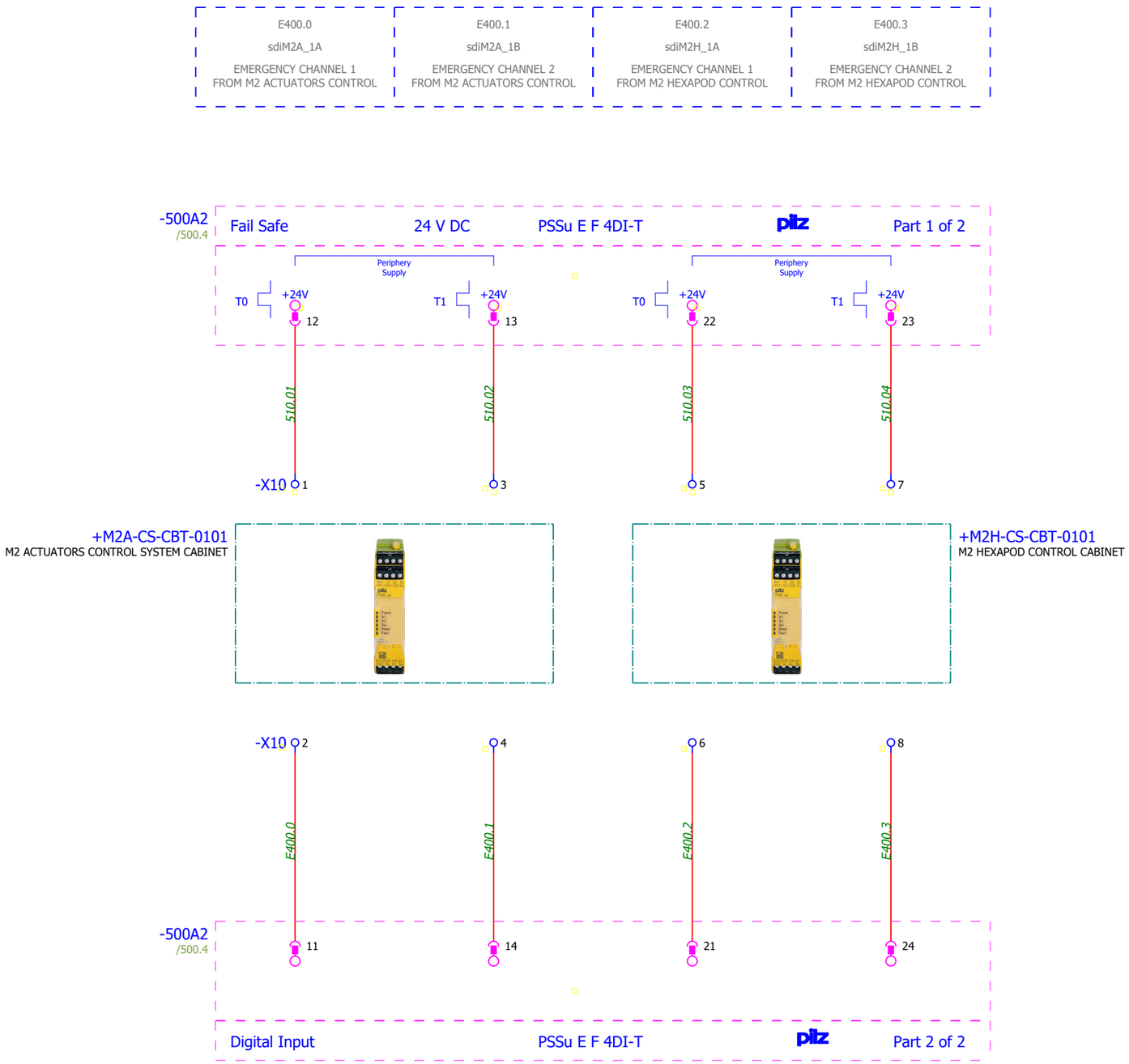

IK4 TEKNIKER Research Alliance
IK4-TEKNIKER
AVDA. OTAOLA 20
20600 Eibar (Gipuzkoa) Spain
Tfno.:(+34) 943 206744
Fax: (+34) 943 202757
Web: www.tekniker.es

Date	30/08/2022	2.0	29/08/2019	JOSE MANUEL				
Reviewed	F.LÓPEZ GARCIA	3.0	17/09/2019	JOSE MANUEL				
Drew by	JOSE MANUEL	Review	Date	Name	Review	Date	Name	

7186-GIS_LSST
LSST Global Safety Interlock System Design
7186

Replaces | Replaced by

SAFETY DIGITAL INPUTS

Customer: EMPRESARIOS AGRUPADOS
C/Magallanes, 3
28015
3098000
http://www.empresariosagrupados.es/

= E1
+ GIS-M2CAM-CBT0101

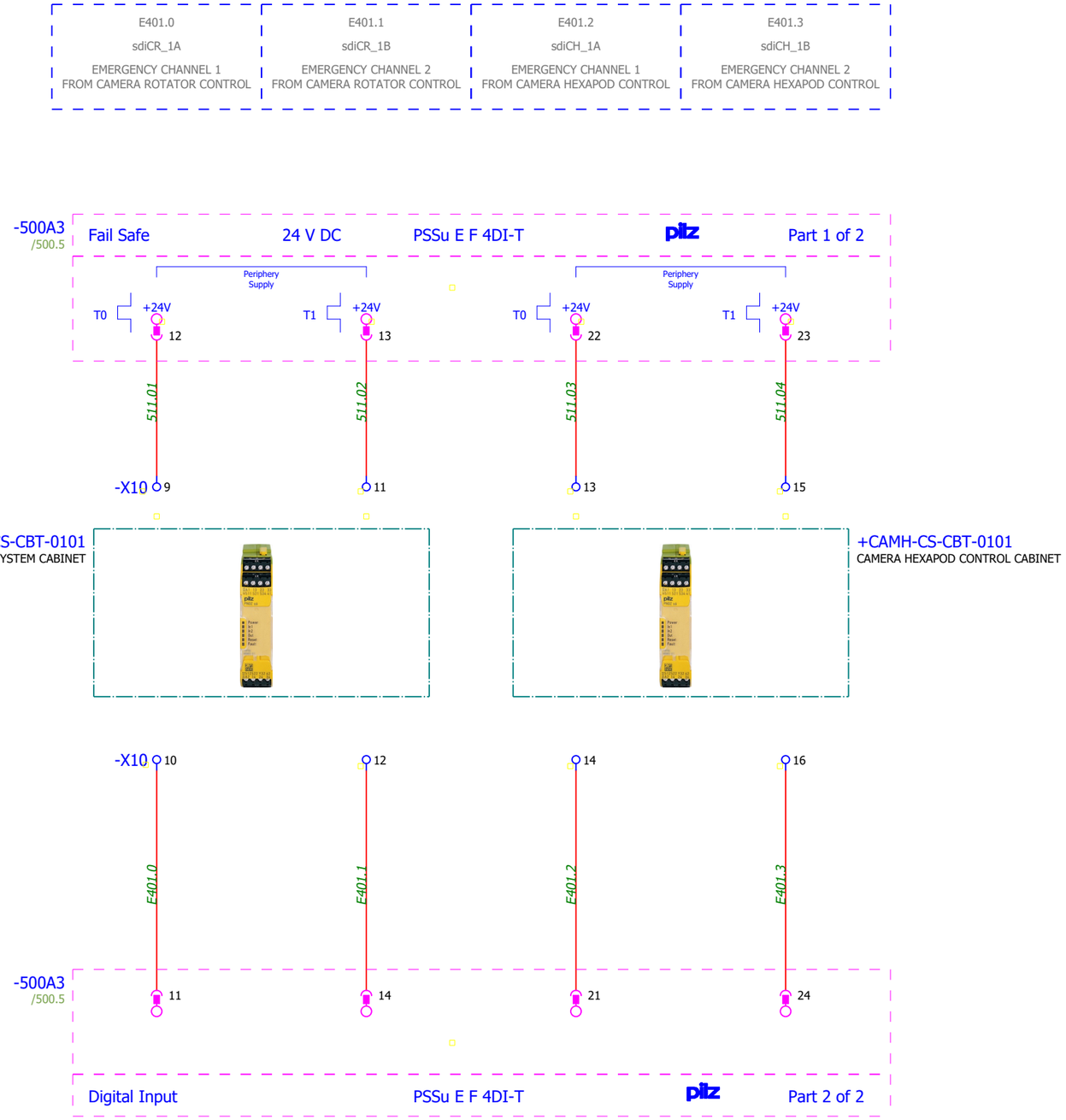

IK4 TEKNIKER Research Alliance
IK4-TEKNIKER
AVDA. OTAOLA 20
20600 Eibar (Gipuzkoa) Spain
Tfno.:(+34) 943 206744
Fax: (+34) 943 202757
Web: www.tekniker.es

Date	30/08/2022	2.0	29/08/2019	JOSE MANUEL			
Reviewed	F.LÓPEZ GARCIA	3.0	17/09/2019	JOSE MANUEL			
Drew by	JOSE MANUEL	Review	Date	Name	Review	Date	Name

7186-GIS_LSST 7186
LSST Global Safety Interlock System Design

Replaces | Replaced by

SAFETY DIGITAL INPUTS

Customer: EMPRESARIOS AGRUPADOS
C/Magallanes, 3
28015
3098000
http://www.empresariosagrupados.es/

= E1
+ GIS-M2CAM-CBT0101

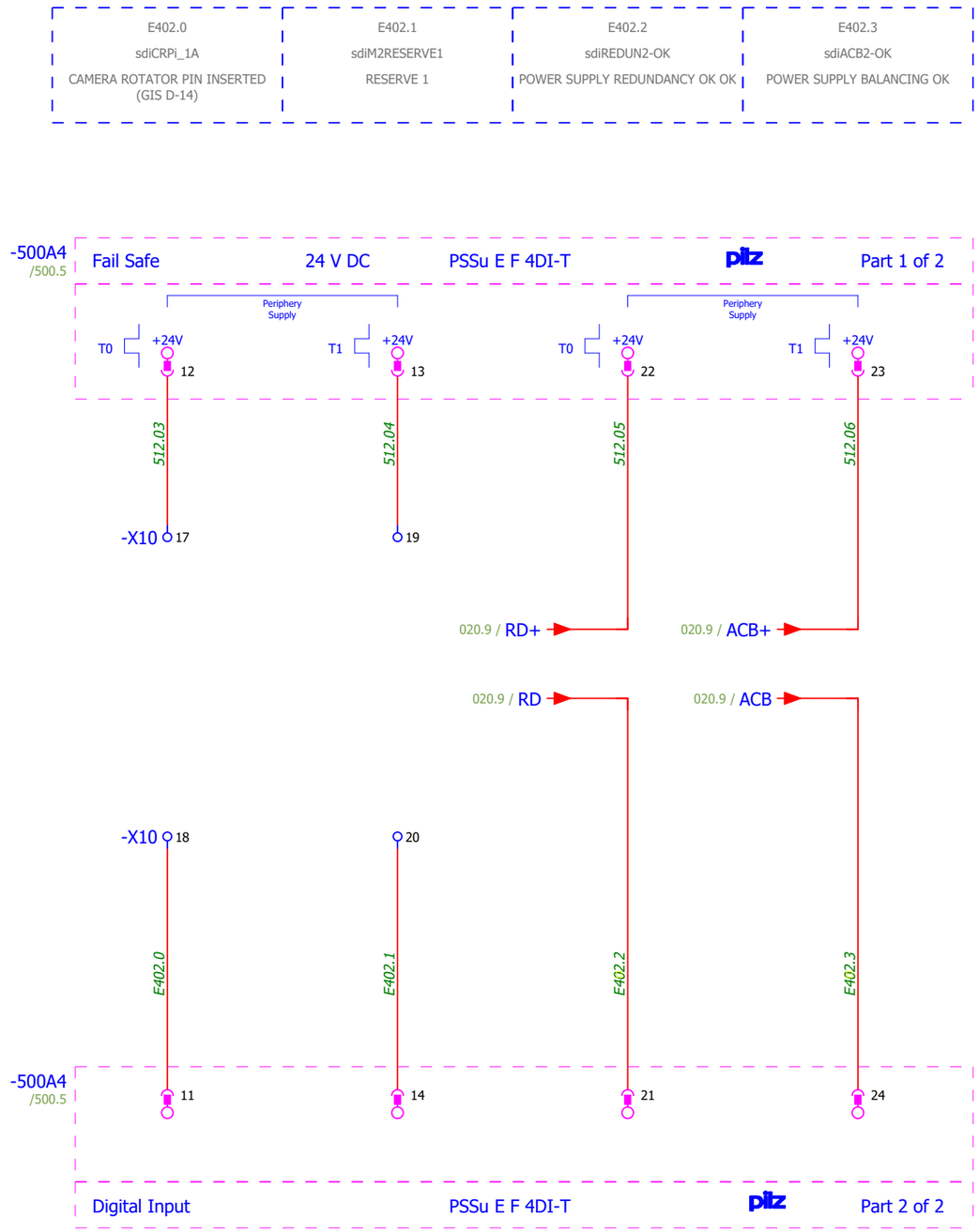

IK4 TEKNIKER Research Alliance

IK4-TEKNIKER
AVDA. OTAOLA 20
20600 Eibar (Gipuzkoa) Spain
Tfno.:(+34) 943 206744
Fax: (+34) 943 202757
Web: www.tekniker.es

Date	30/08/2022	2.0	29/08/2019	JOSE MANUEL			
Reviewed	F.LÓPEZ GARCIA	3.0	17/09/2019	JOSE MANUEL			
Drew by	JOSE MANUEL	Review	Date	Name	Review	Date	Name

7186-GIS_LSST 7186

LSST Global Safety Interlock System Design

Replaces | Replaced by

SAFETY DIGITAL INPUTS

Customer: EMPRESARIOS AGRUPADOS
C/Magallanes, 3
28015
3098000
http://www.empresariosagrupados.es/

= E1
+ GIS-M2CAM-CBT0101

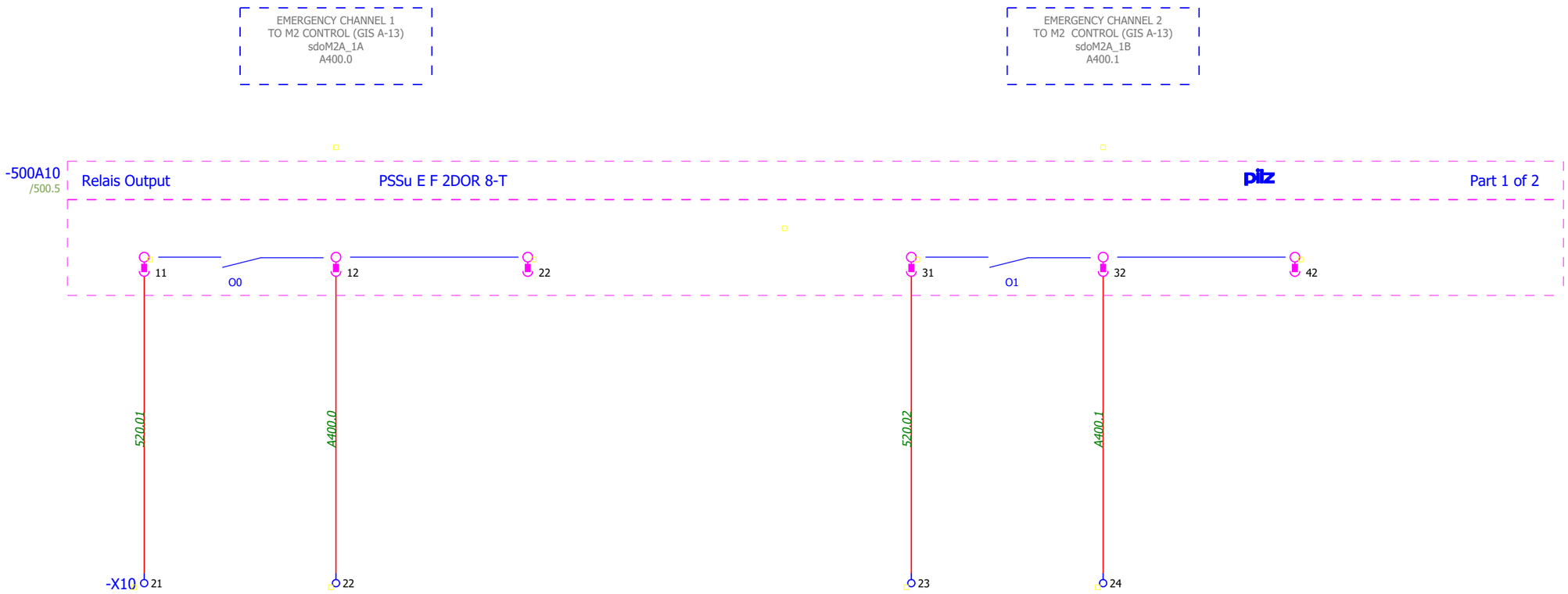

+M2A-CS-CBT-0101
M2 ACTUATORS CONTROL SYSTEM CABINET

IK4 TEKNIKER Research Alliance
IK4-TEKNIKER
AVDA. OTAOLA 20
20600 Eibar (Gipuzkoa) Spain
Tfno.:(+34) 943 206744
Fax: (+34) 943 202757
Web: www.tekniker.es

Date	30/08/2022	2.0	29/08/2019	JOSE MANUEL			
Reviewed	F.LÓPEZ GARCIA	3.0	17/09/2019	JOSE MANUEL			
Drew by	JOSE MANUEL	Review	Date	Name	Review	Date	Name

7186-GIS_LSST 7186
LSST Global Safety Interlock System Design

Replaces | Replaced by

SAFETY DIGITAL OUTPUTS

Customer: EMPRESARIOS AGRUPADOS
C/Magallanes, 3
28015
3098000
http://www.empresariosagrupados.es/

= E1
+ GIS-M2CAM-CBT0101

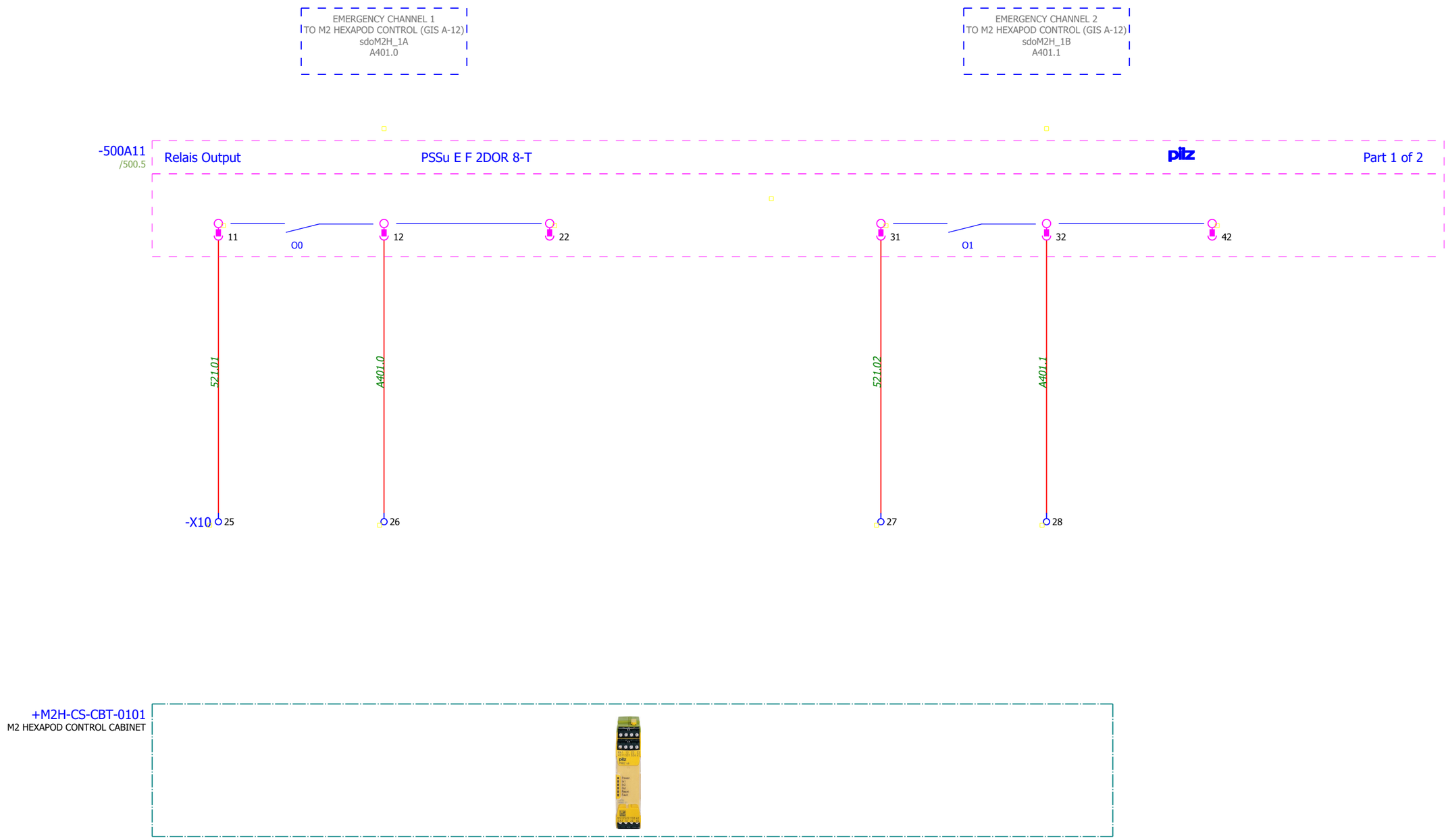

IK4 TEKNIKER Research Alliance

IK4-TEKNIKER
AVDA. OTAOLA 20
20600 Eibar (Gipuzkoa) Spain
Tfno.:(+34) 943 206744
Fax: (+34) 943 202757
Web: www.tekniker.es

Date	30/08/2022	2.0	29/08/2019	JOSE MANUEL			
Reviewed	F.LÓPEZ GARCIA	3.0	17/09/2019	JOSE MANUEL			
Drew by	JOSE MANUEL	Review	Date	Name	Review	Date	Name

7186-GIS_LSST 7186

LSST Global Safety Interlock System Design

Replaces | Replaced by

SAFETY DIGITAL OUTPUTS

Customer: EMPRESARIOS AGRUPADOS

EMPRESARIOS AGRUPADOS
C/Magallanes, 3
28015
3098000
http://www.empresariosagrupados.es/

= E1

+ GIS-M2CAM-CBT0101

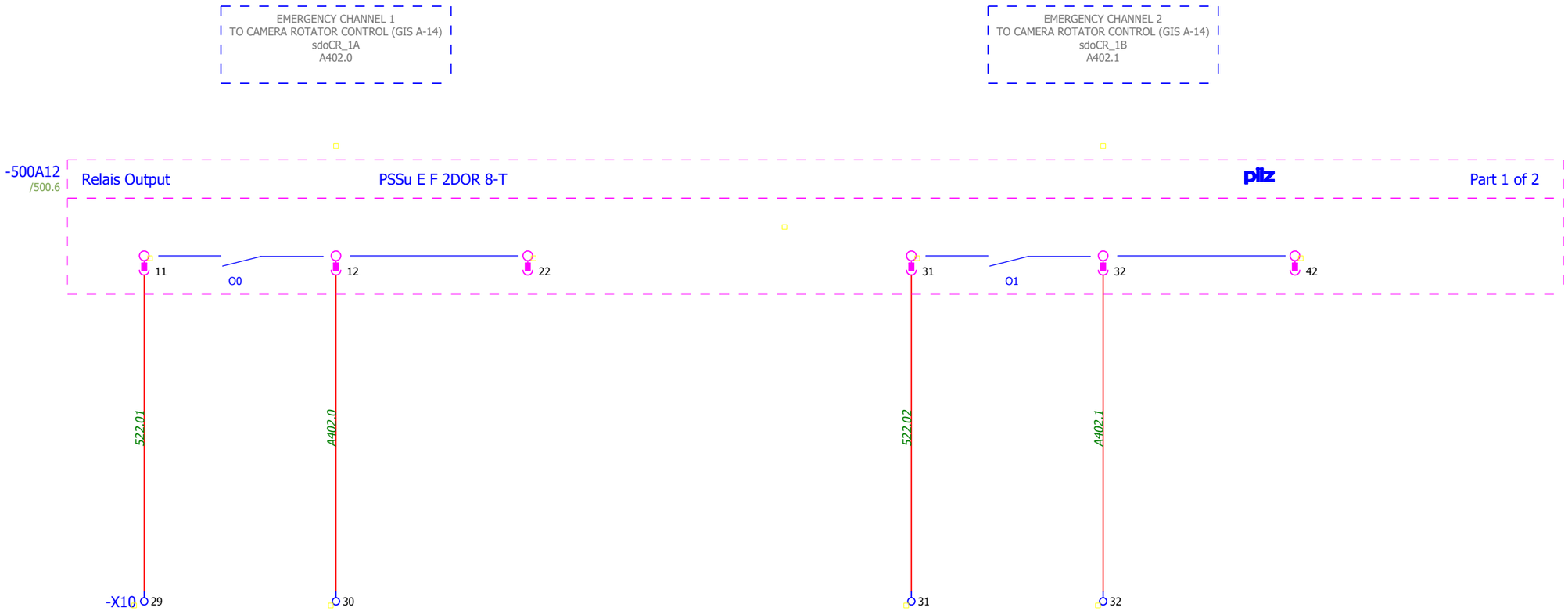

+CAMR-CS-CBT-0101
CAMERA ROTATOR CONTROL CABINET

IK4 TEKNIKER Research Alliance
IK4-TEKNIKER
AVDA. OTAOLA 20
20600 Eibar (Gipuzkoa) Spain
Tfno.:(+34) 943 206744
Fax: (+34) 943 202757
Web: www.tekniker.es

Date	30/08/2022	2.0	29/08/2019	JOSE MANUEL			
Reviewed	F.LÓPEZ GARCIA	3.0	17/09/2019	JOSE MANUEL			
Drew by	JOSE MANUEL	Review	Date	Name	Review	Date	Name

7186-GIS_LSST 7186
LSST Global Safety Interlock System Design

Replaces | Replaced by

SAFETY DIGITAL OUTPUTS

Customer: EMPRESARIOS AGRUPADOS
C/Magallanes, 3
28015
3098000
http://www.empresariosagrupados.es/

= E1
+ GIS-M2CAM-CBT0101

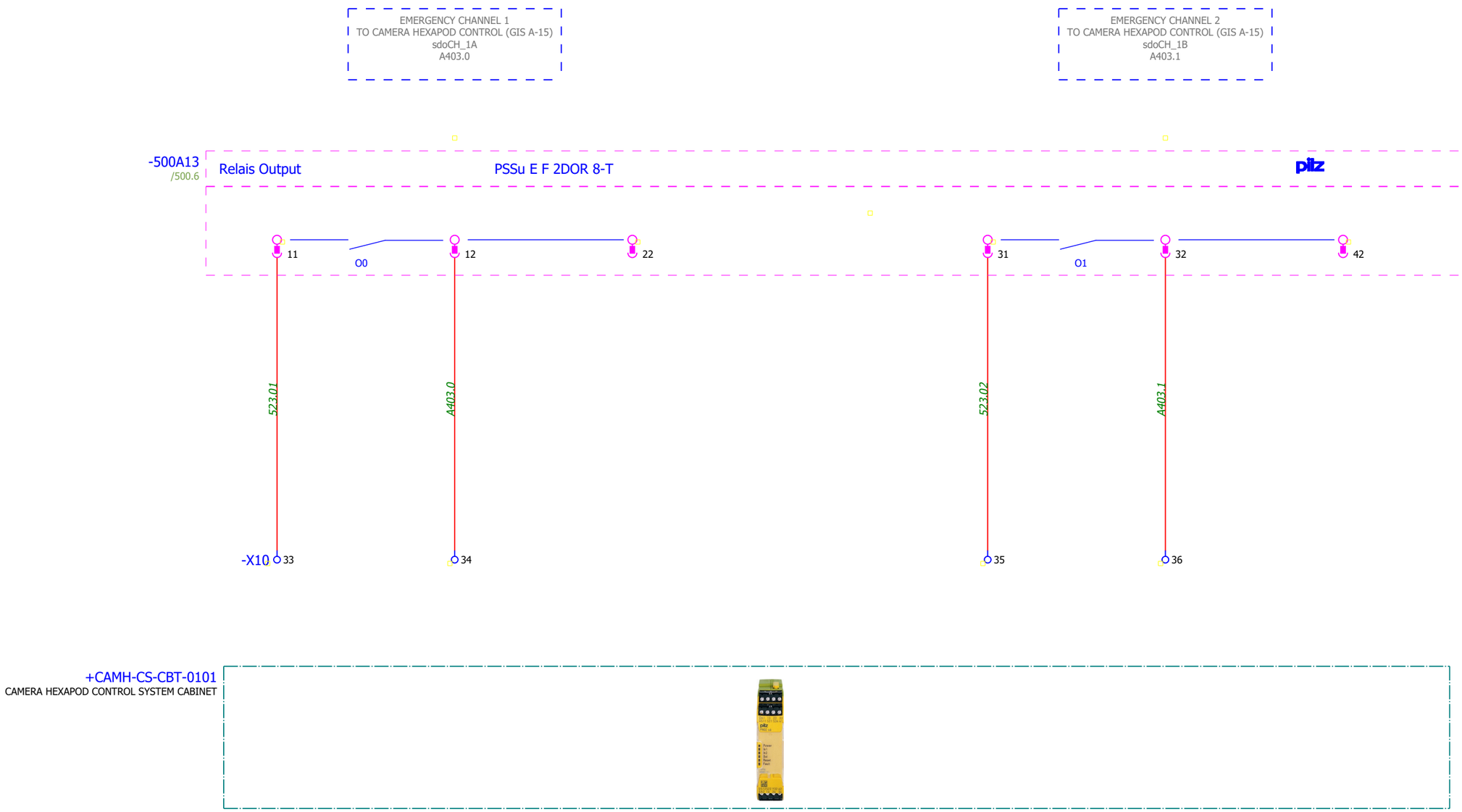

IK4 TEKNIKER Research Alliance

IK4-TEKNIKER
AVDA. OTAOLA 20
20600 Eibar (Gipuzkoa) Spain
Tfno.:(+34) 943 206744
Fax: (+34) 943 202757
Web: www.tekniker.es

Date	30/08/2022	2.0	29/08/2019	JOSE MANUEL			
Reviewed	F.LÓPEZ GARCIA	3.0	17/09/2019	JOSE MANUEL			
Drew by	JOSE MANUEL	Review	Date	Name	Review	Date	Name

7186-GIS_LSST 7186

LSST Global Safety Interlock System Design

Replaces | Replaced by

SAFETY DIGITAL OUTPUTS

Customer: EMPRESARIOS AGRUPADOS

C/Magallanes, 3
28015
3098000

http://www.empresariosagrupados.es/

= E1

+ GIS-M2CAM-CBT0101

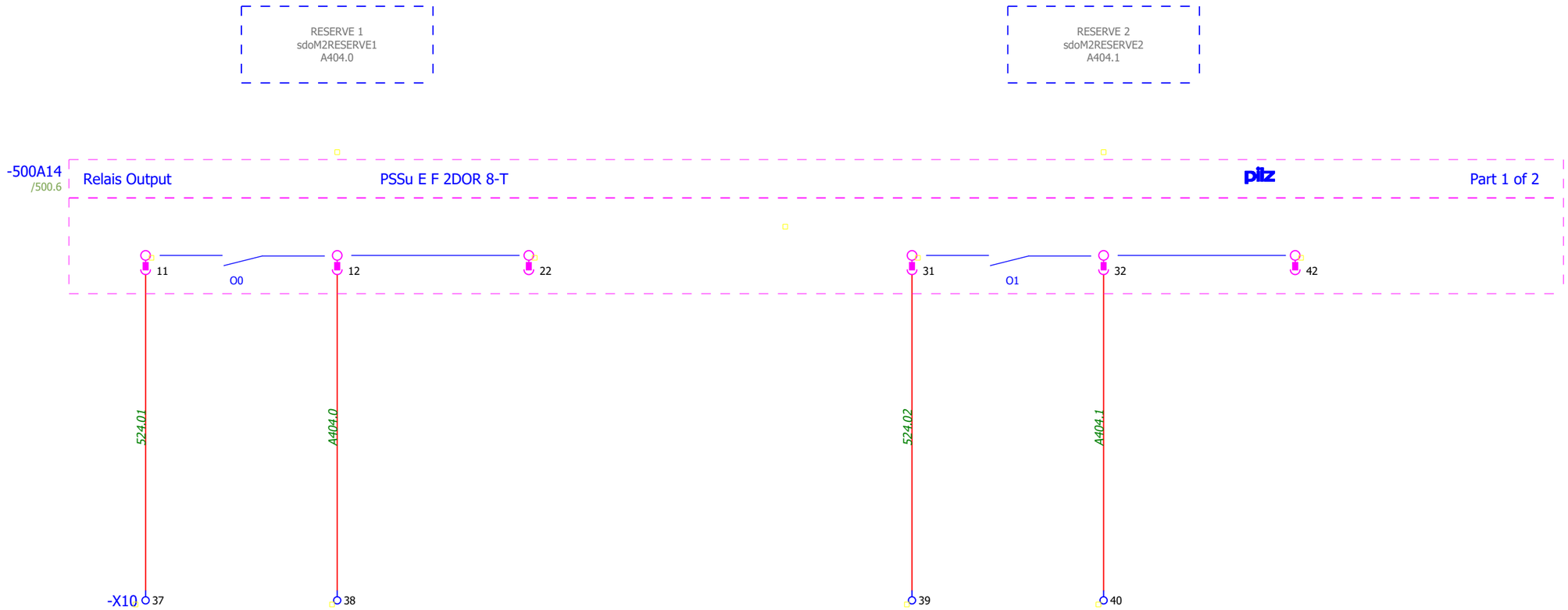

IK4 TEKNIKER Research Alliance

IK4-TEKNIKER
AVDA. OTAOLA 20
20600 Eibar (Gipuzkoa) Spain
Tfno.:(+34) 943 206744
Fax: (+34) 943 202757
Web: www.tekniker.es

Date	30/08/2022	2.0	29/08/2019	JOSE MANUEL				
Reviewed	F.LÓPEZ GARCIA	3.0	17/09/2019	JOSE MANUEL				
Drew by	JOSE MANUEL	Review	Date	Name	Review	Date	Name	

7186-GIS_LSST 7186

LSST Global Safety Interlock System Design

Replaces | Replaced by

SAFETY DIGITAL OUTPUTS

Customer: EMPRESARIOS AGRUPADOS

EMPRESARIOS AGRUPADOS
C/Magallanes, 3
28015
3098000

http://www.empresariosagrupados.es/

= E1

+ GIS-M2CAM-CBT0101

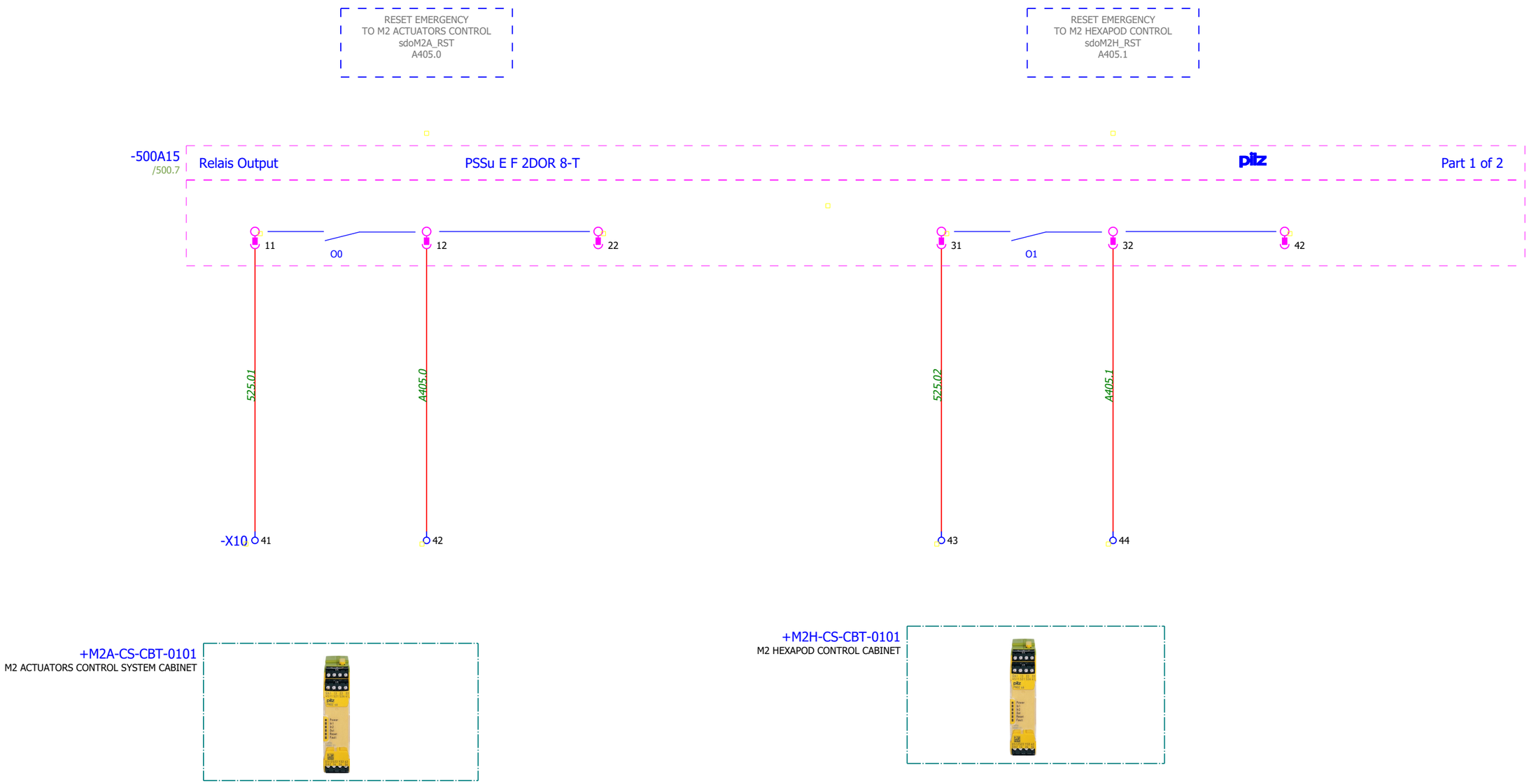

IK4 TEKNIKER Research Alliance
IK4-TEKNIKER
AVDA. OTAOLA 20
20600 Eibar (Gipuzkoa) Spain
Tfno.:(+34) 943 206744
Fax: (+34) 943 202757
Web: www.tekniker.es

Date	30/08/2022	2.0	29/08/2019	JOSE MANUEL			
Reviewed	F.LÓPEZ GARCIA	3.0	17/09/2019	JOSE MANUEL			
Drew by	JOSE MANUEL	Review	Date	Name	Review	Date	Name

7186-GIS_LSST 7186
LSST Global Safety Interlock System Design

Replaces | Replaced by

SAFETY DIGITAL OUTPUTS

Customer: EMPRESARIOS AGRUPADOS
C/Magallanes, 3
28015
3098000
http://www.empresariosagrupados.es/

= E1
+ GIS-M2CAM-CBT0101

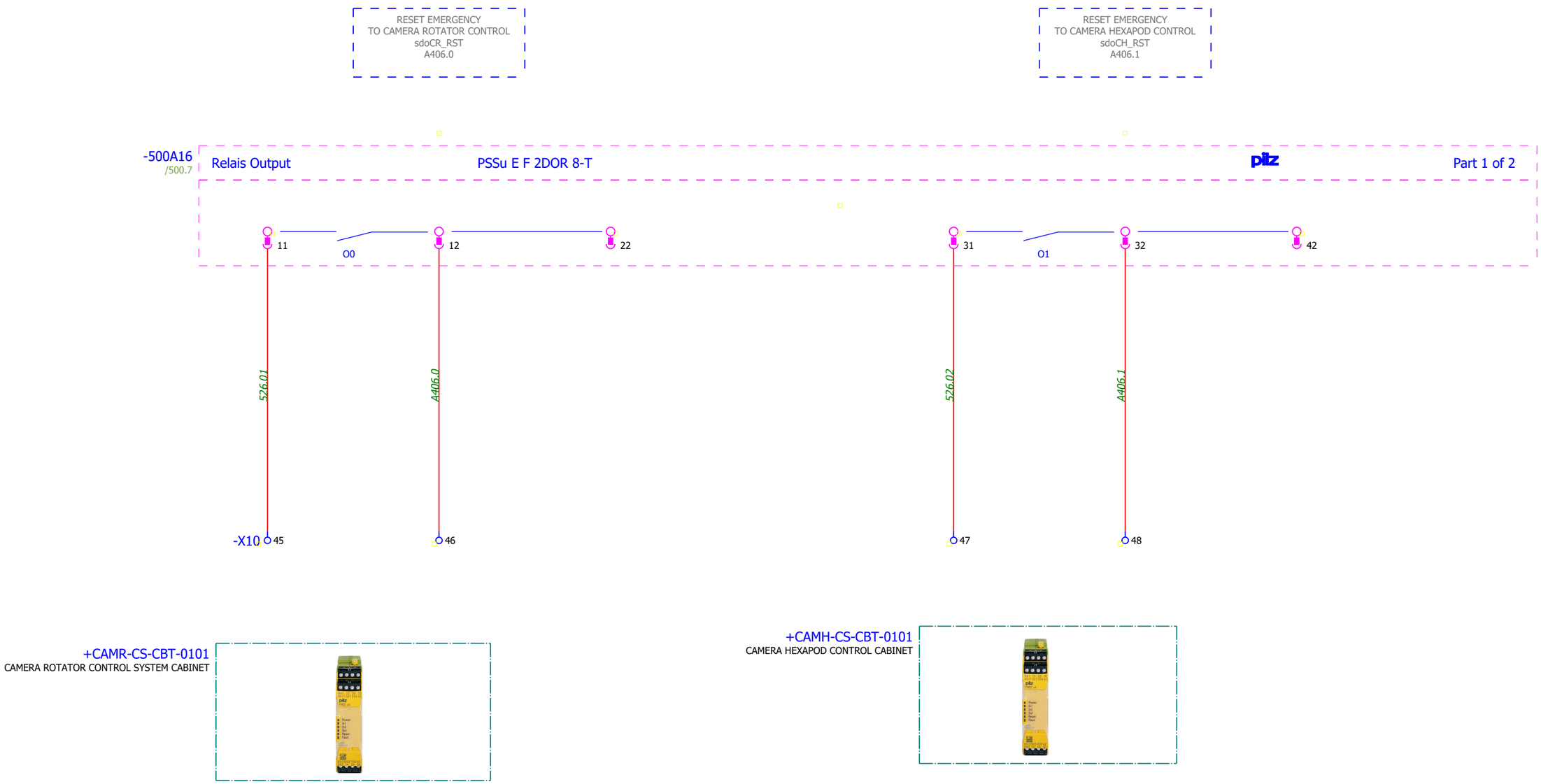

IK4 TEKNIKER Research Alliance
IK4-TEKNIKER
AVDA. OTAOLA 20
20600 Eibar (Gipuzkoa) Spain
Tfno.:(+34) 943 206744
Fax: (+34) 943 202757
Web: www.tekniker.es

Date	30/08/2022	2.0	29/08/2019	JOSE MANUEL				
Reviewed	F.LÓPEZ GARCIA	3.0	17/09/2019	JOSE MANUEL				
Drew by	JOSE MANUEL	Review	Date	Name	Review	Date	Name	

7186-GIS_LSST 7186
LSST Global Safety Interlock System Design

Replaces | Replaced by

SAFETY DIGITAL OUTPUTS

Customer: EMPRESARIOS AGRUPADOS
C/Magallanes, 3
28015
3098000
http://www.empresariosagrupados.es/

= E1
+ GIS-M2CAM-CBT0101

Customer

EMPRESARIOS AGRUPADOS

EMPRESARIOS AGRUPADOS

C/Magallanes, 3
28015
ESPAÑA
3098000

http://www.empresariosagrupados.es/

Project:

7186-GIS_LSST

7186

LSST Global Safety Interlock System Design

E1
MACHINE

GIS-PfAux-CBT0101
GIS Pflow & Auxiliary control CABINET

Number of pages: 178

Made by:

IK4 TEKNIKER
Research Alliance

IK4-TEKNIKER

AVDA. OTAOLA 20
20600 Eibar (Gipuzkoa) Spain
Tfno. : (+34) 943 206744
Fax : (+34) 943 202757
Web: www.tekniker.es

2.0	CHILE ASEMBLY	29/08/2019	JOSE MANUEL
3.0	CHILE ASEMBLY (Specific cabinets for M2CAM & PfAux)	17/09/2019	JOSE MANUEL
Review	Review description	Date	Reviewed

Drew by: J.M.CASTAÑO
Reviewed: F.LÓPEZ GARCIA
Date: 04/05/2017
Replaces:
Replaced by:

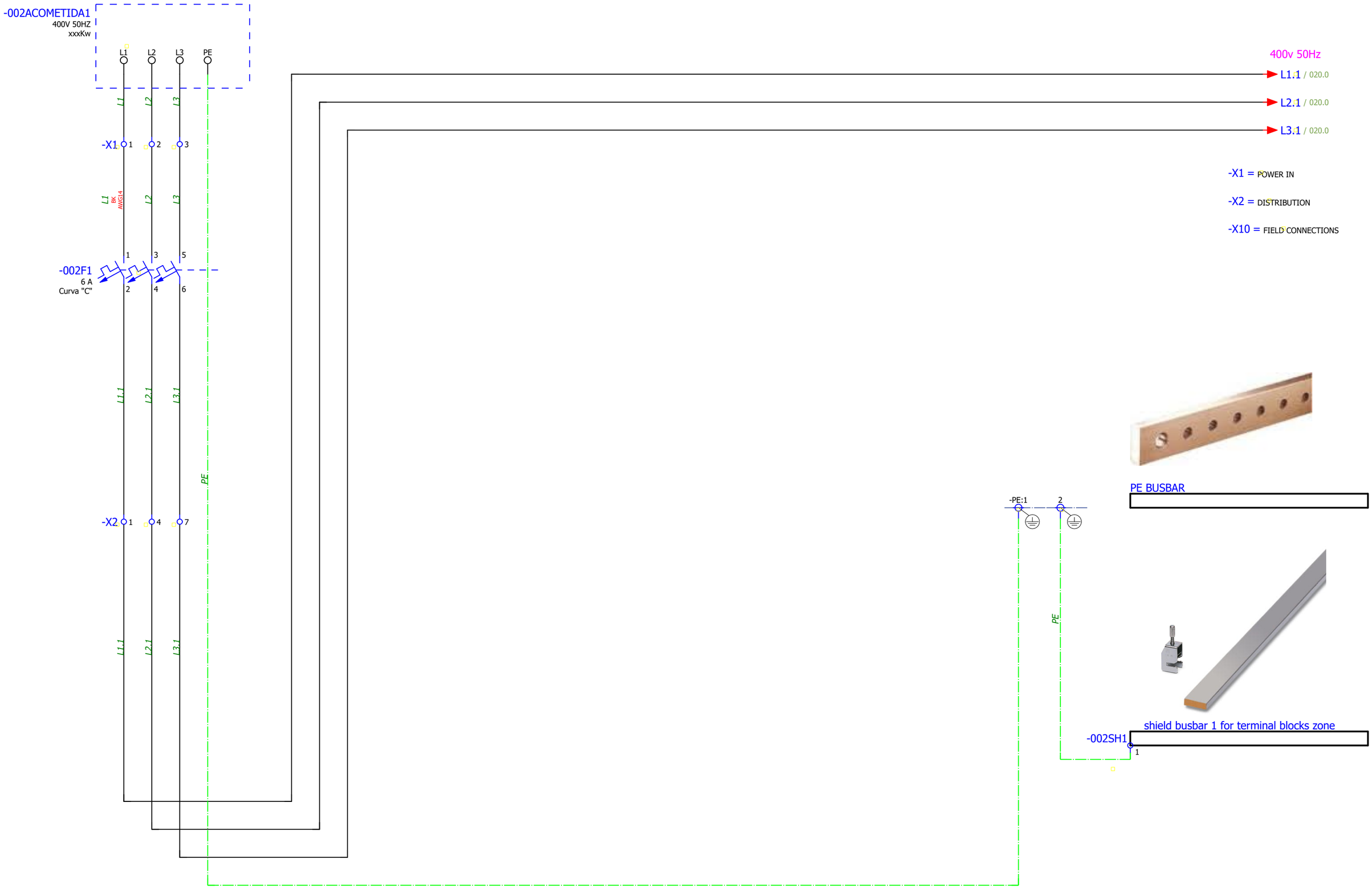

IK4 TEKNIKER Research Alliance

IK4-TEKNIKER
AVDA. OTAOLA 20
20600 Eibar (Gipuzkoa) Spain
Tfno.:(+34) 943 206744
Fax: (+34) 943 202757
Web: www.tekniker.es

Date	30/08/2022	2.0	29/08/2019	JOSE MANUEL				
Reviewed	F.LÓPEZ GARCIA	3.0	17/09/2019	JOSE MANUEL				
Drew by	JOSE MANUEL	Review	Date	Name	Review	Date	Name	

7186-GIS_LSST 7186

LSST Global Safety Interlock System Design

Replaces | Replaced by

POWER

Customer: EMPRESARIOS AGRUPADOS
C/Magallanes, 3
28015
3098000
http://www.empresariosagrupados.es/

= E1

+ GIS-PfAux-CBT0101

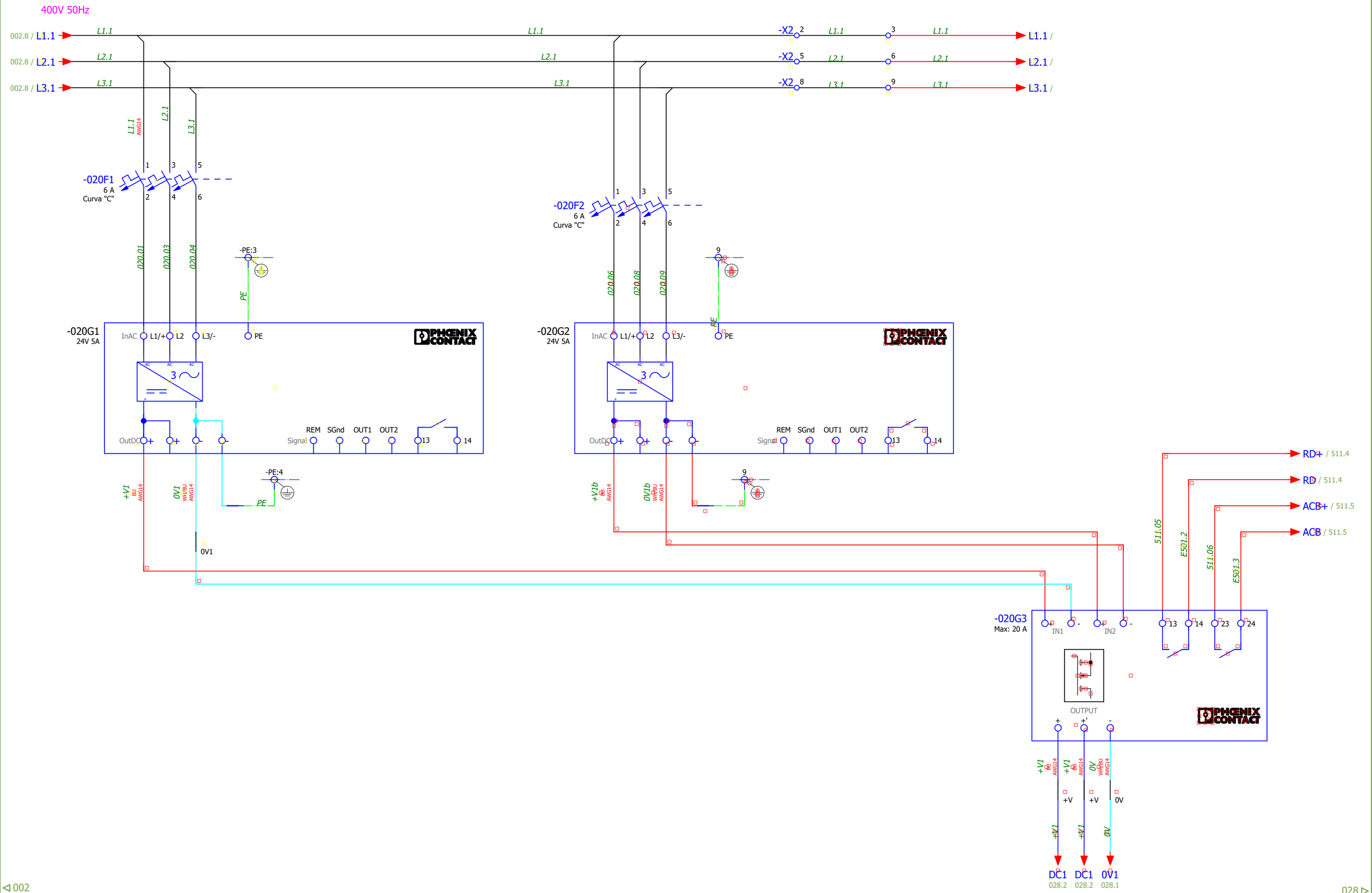

IK4 TEKNIKER Research Alliance

IK4-TEKNIKER
AVDA. OTAOLA 20
20600 Eibar (Gipuzkoa) Spain
Tfno.:(+34) 943 206744
Fax: (+34) 943 202757
Web: www.tekniker.es

Date	30/08/2022	2.0	29/08/2019	JOSE MANUEL			
Reviewed	F.LÓPEZ GARCIA	3.0	17/09/2019	JOSE MANUEL			
Drew by	JOSE MANUEL	Review	Date	Name	Review	Date	Name

7186-GIS_LSST 7186

LSST Global Safety Interlock System Design

Replaces | Replaced by

DC POWER

Customer: EMPRESARIOS AGRUPADOS
C/Magallanes, 3
28015
3098000
http://www.empresariosagrupados.es/

= E1

+ GIS-PfAux-CBT0101

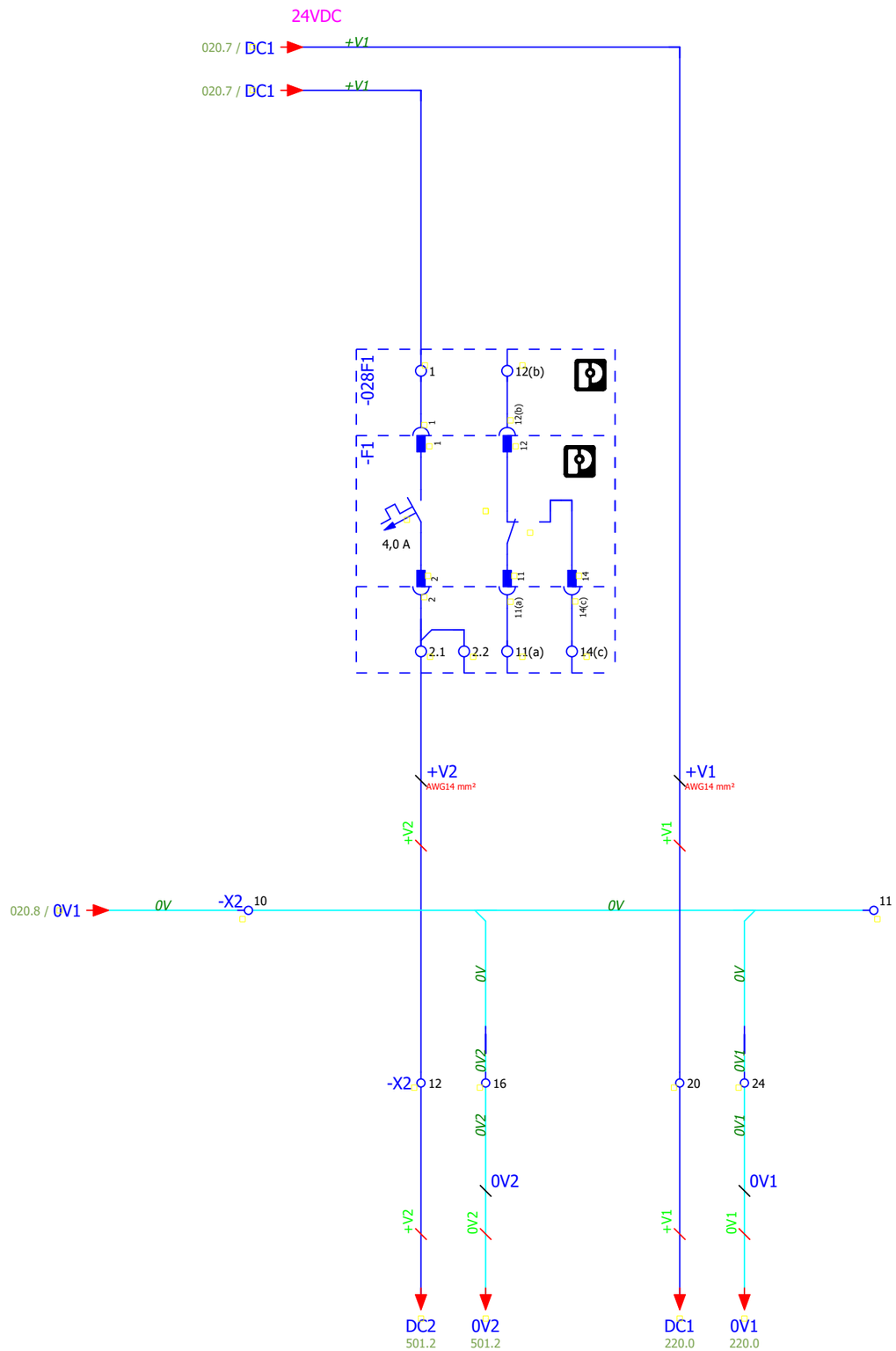

IK4 TEKNIKER Research Alliance

IK4-TEKNIKER
AVDA. OTAOLA 20
20600 Eibar (Gipuzkoa) Spain
Tfno.:(+34) 943 206744
Fax: (+34) 943 202757
Web: www.tekniker.es

Date	30/08/2022	2.0	29/08/2019	JOSE MANUEL			
Reviewed	F.LÓPEZ GARCIA	3.0	17/09/2019	JOSE MANUEL			
Drew by	JOSE MANUEL	Review	Date	Name	Review	Date	Name

7186-GIS_LSST 7186

LSST Global Safety Interlock System Design

Replaces | Replaced by

DC DISTRIBUTION

Customer: EMPRESARIOS AGRUPADOS
C/Magallanes, 3
28015
3098000
http://www.empresariosagrupados.es/

= E1
+ GIS-PfAux-CBT0101

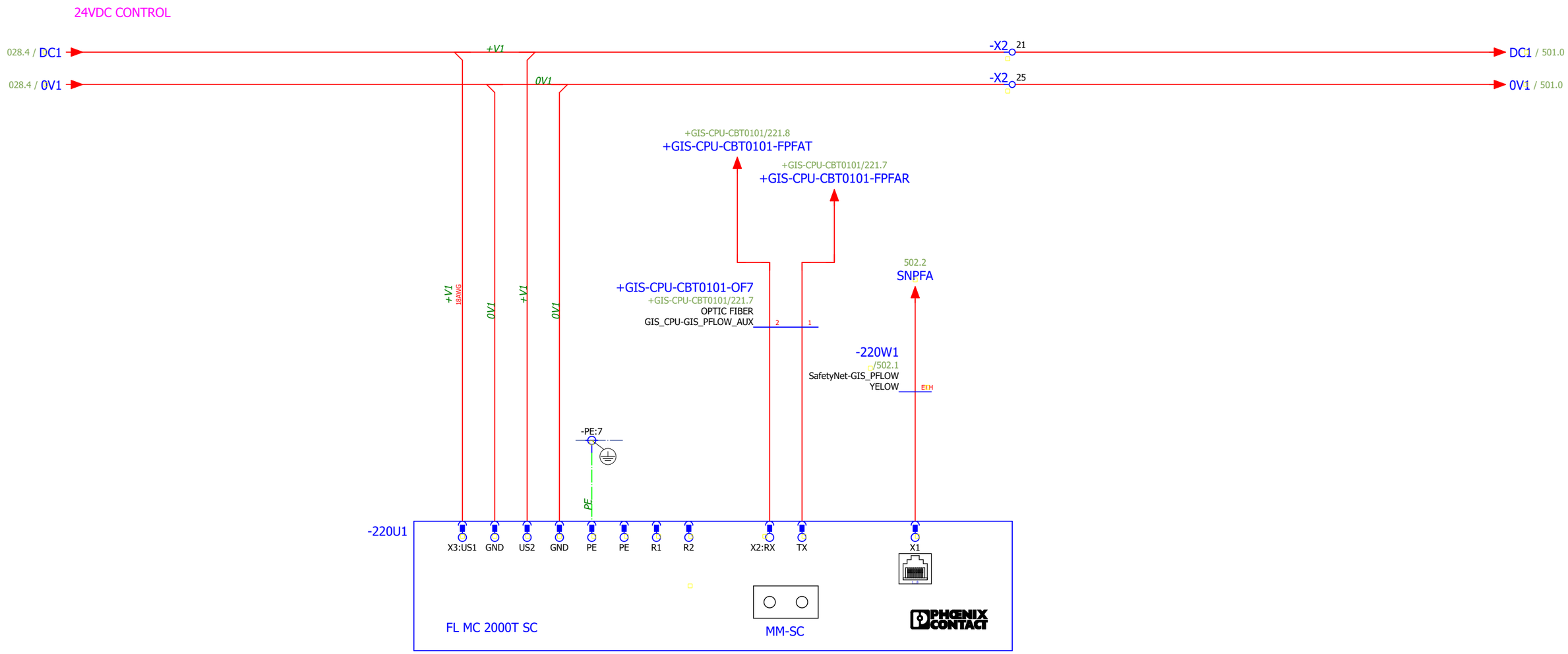

OPTIC FIBER GIS-CPU TO GIS-LASER

IK4 TEKNIKER Research Alliance
IK4-TEKNIKER
AVDA. OTAOLA 20
20600 Eibar (Gipuzkoa) Spain
Tfno.:(+34) 943 206744
Fax: (+34) 943 202757
Web: www.tekniker.es

Date	30/08/2022	2.0	29/08/2019	JOSE MANUEL				
Reviewed	F.LÓPEZ GARCIA	3.0	17/09/2019	JOSE MANUEL				
Drew by	JOSE MANUEL	Review	Date	Name	Review	Date	Name	

7186-GIS_LSST
LSST Global Safety Interlock System Design
7186

Replaces | Replaced by

MM-SC OPTIC FIBER TO RJ45 CONVERSOR

Customer: EMPRESARIOS AGRUPADOS
C/Magallanes, 3
28015
3098000
http://www.empresariosagrupados.es/

= E1
+ GIS-PfAux-CBT0101

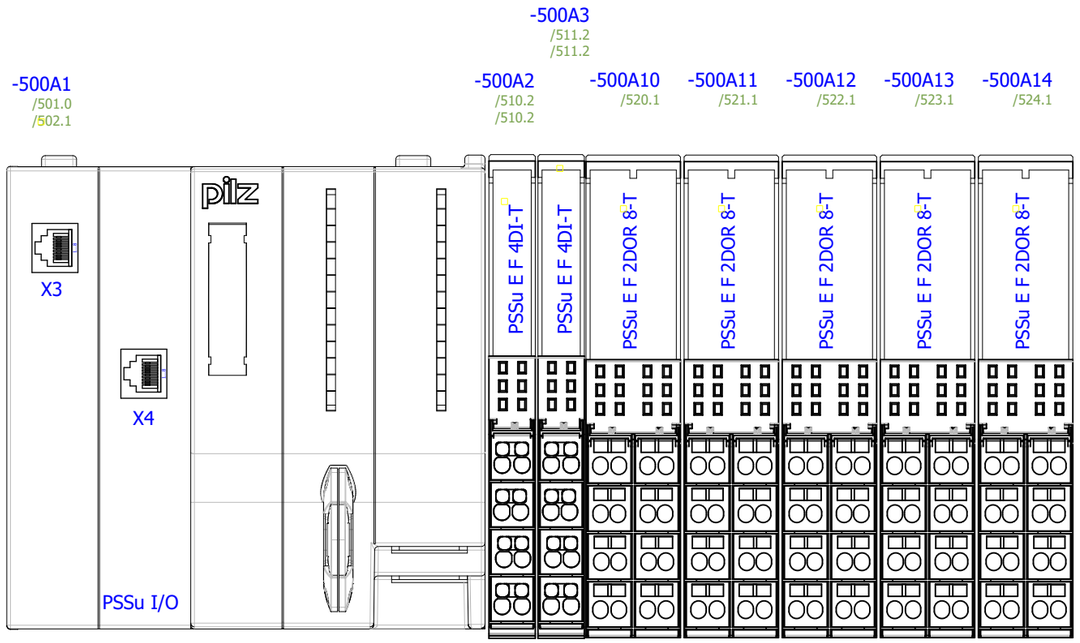

IK4 TEKNIKER Research Alliance
IK4-TEKNIKER
AVDA. OTAOLA 20
20600 Eibar (Gipuzkoa) Spain
Tfno.:(+34) 943 206744
Fax: (+34) 943 202757
Web: www.tekniker.es

Date	30/08/2022	2.0	29/08/2019	JOSE MANUEL				
Reviewed	F.LÓPEZ GARCIA	3.0	17/09/2019	JOSE MANUEL				
Drew by	JOSE MANUEL	Review	Date	Name	Review	Date	Name	

7186-GIS_LSST 7186
LSST Global Safety Interlock System Design

Replaces | Replaced by

EMERGENCY PLC PSSuniversal

Customer: EMPRESARIOS AGRUPADOS
C/Magallanes, 3
28015
3098000
http://www.empresariosagrupados.es/

= E1
+ GIS-PfAux-CBT0101

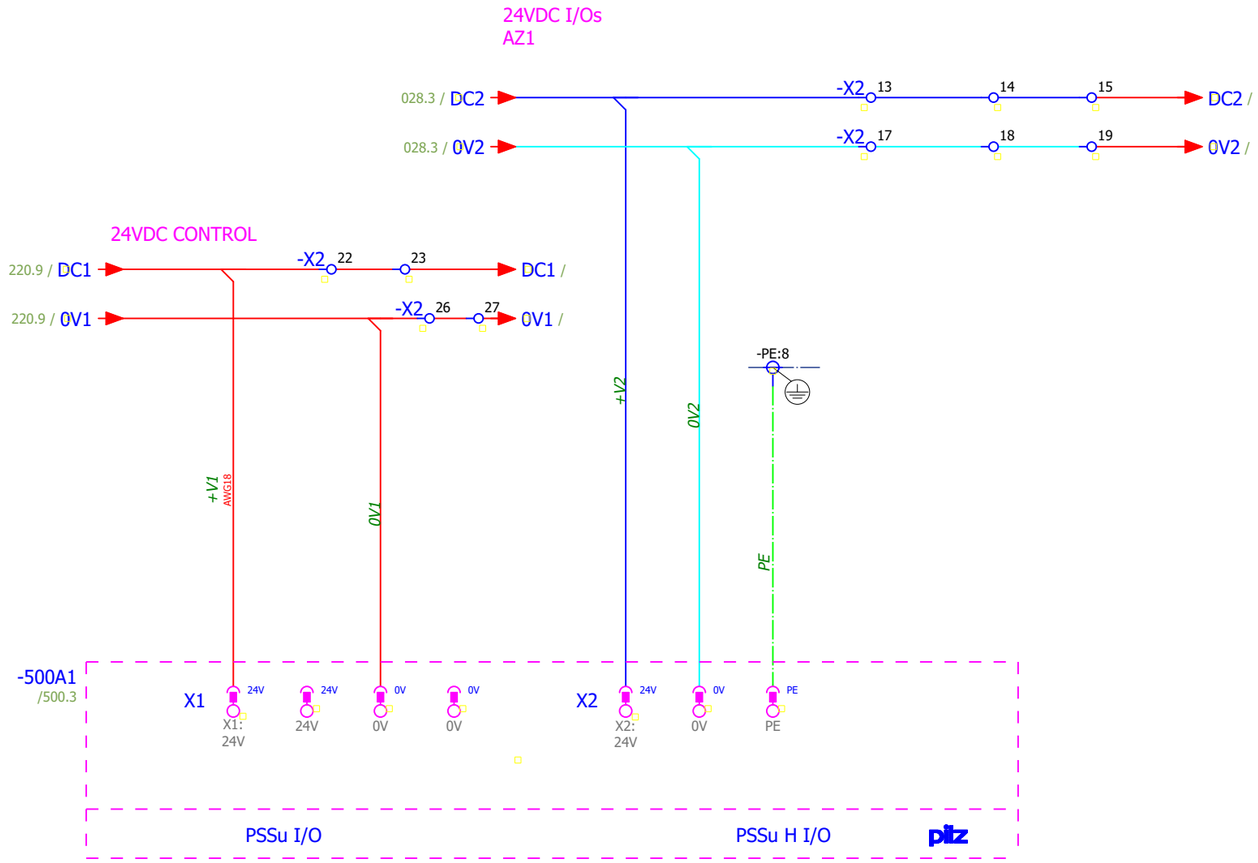

IK4 TEKNIKER Research Alliance

IK4-TEKNIKER
AVDA. OTAOLA 20
20600 Eibar (Gipuzkoa) Spain
Tfno.:(+34) 943 206744
Fax: (+34) 943 202757
Web: www.tekniker.es

Date	30/08/2022	2.0	29/08/2019	JOSE MANUEL				
Reviewed	F.LÓPEZ GARCIA	3.0	17/09/2019	JOSE MANUEL				
Drew by	JOSE MANUEL	Review	Date	Name	Review	Date	Name	

7186-GIS_LSST 7186

LSST Global Safety Interlock System Design

Replaces | Replaced by

POWER SAFETY PSS

Customer: EMPRESARIOS AGRUPADOS

C/Magallanes, 3
28015
3098000

http://www.empresariosagrupados.es/

= E1

+ GIS-PfAux-CBT0101

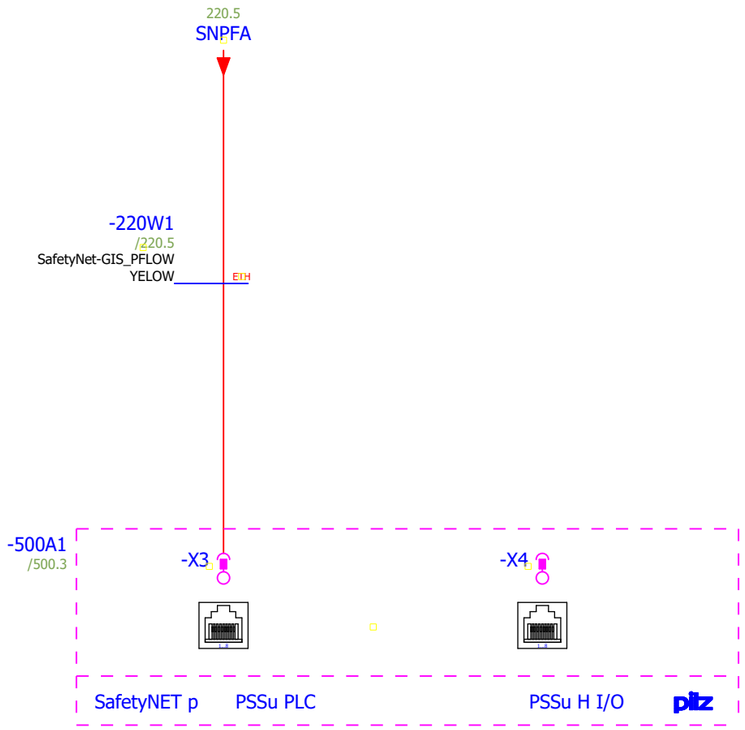

IK4 TEKNIKER Research Alliance
IK4-TEKNIKER
AVDA. OTAOLA 20
20600 Eibar (Gipuzkoa) Spain
Tfno.:(+34) 943 206744
Fax: (+34) 943 202757
Web: www.tekniker.es

Date	30/08/2022	2.0	29/08/2019	JOSE MANUEL				
Reviewed	F.LÓPEZ GARCIA	3.0	17/09/2019	JOSE MANUEL				
Drew by	JOSE MANUEL	Review	Date	Name	Review	Date	Name	

7186-GIS_LSST 7186

LSST Global Safety Interlock System Design

Replaces | Replaced by

SAFETY NET

Customer: EMPRESARIOS AGRUPADOS
C/Magallanes, 3
28015
3098000
http://www.empresariosagrupados.es/

= E1
+ GIS-PfAux-CBT0101

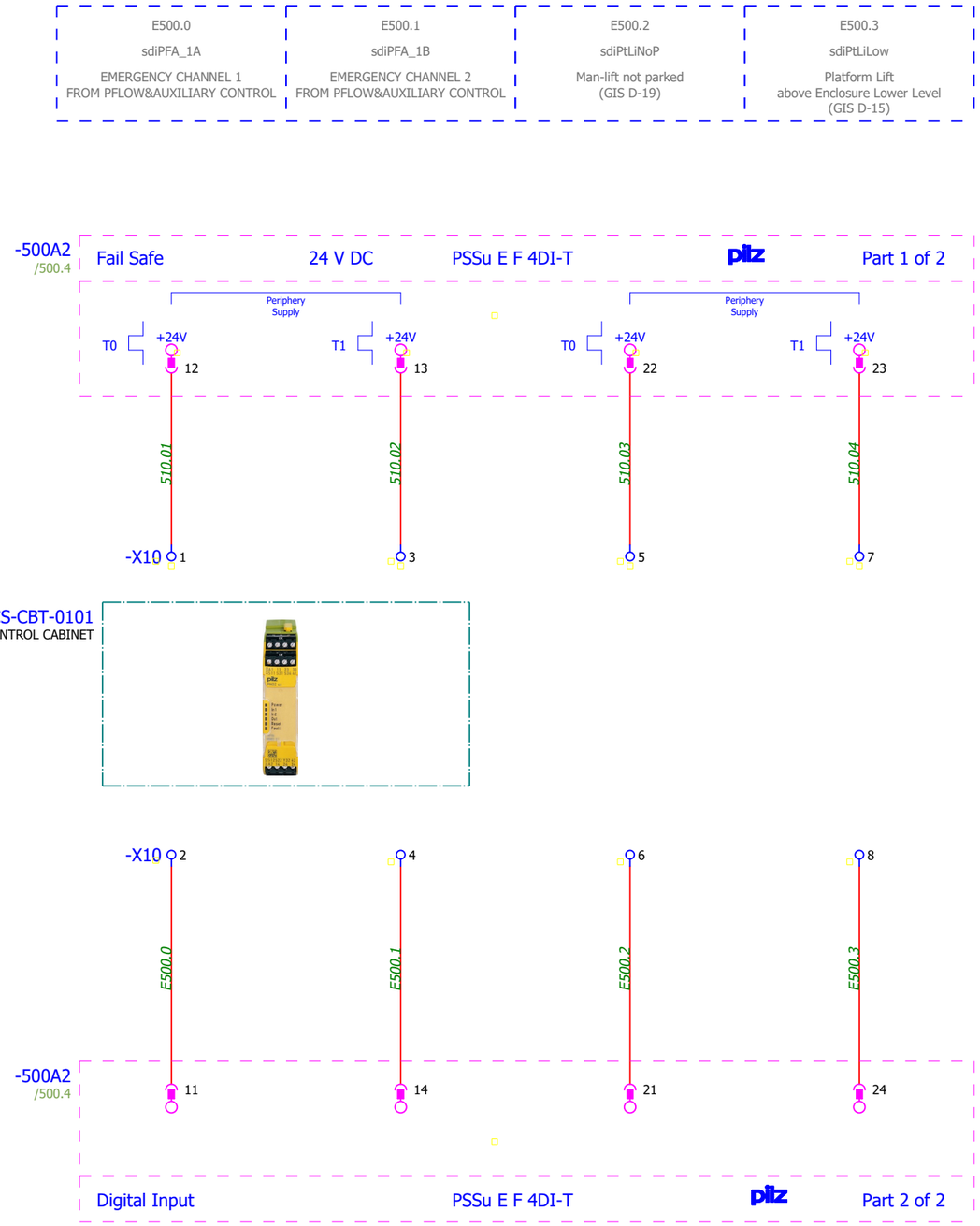

IK4 TEKNIKER Research Alliance
IK4-TEKNIKER
AVDA. OTAOLA 20
20600 Eibar (Gipuzkoa) Spain
Tfno.:(+34) 943 206744
Fax: (+34) 943 202757
Web: www.tekniker.es

Date	30/08/2022	2.0	29/08/2019	JOSE MANUEL				
Reviewed	F.LÓPEZ GARCIA	3.0	17/09/2019	JOSE MANUEL				
Drew by	JOSE MANUEL	Review	Date	Name	Review	Date	Name	

7186-GIS_LSST 7186
LSST Global Safety Interlock System Design

Replaces | Replaced by

SAFETY DIGITAL INPUTS

Customer: EMPRESARIOS AGRUPADOS
C/Magallanes, 3
28015
3098000
http://www.empresariosagrupados.es/

= E1
+ GIS-PfAux-CBT0101

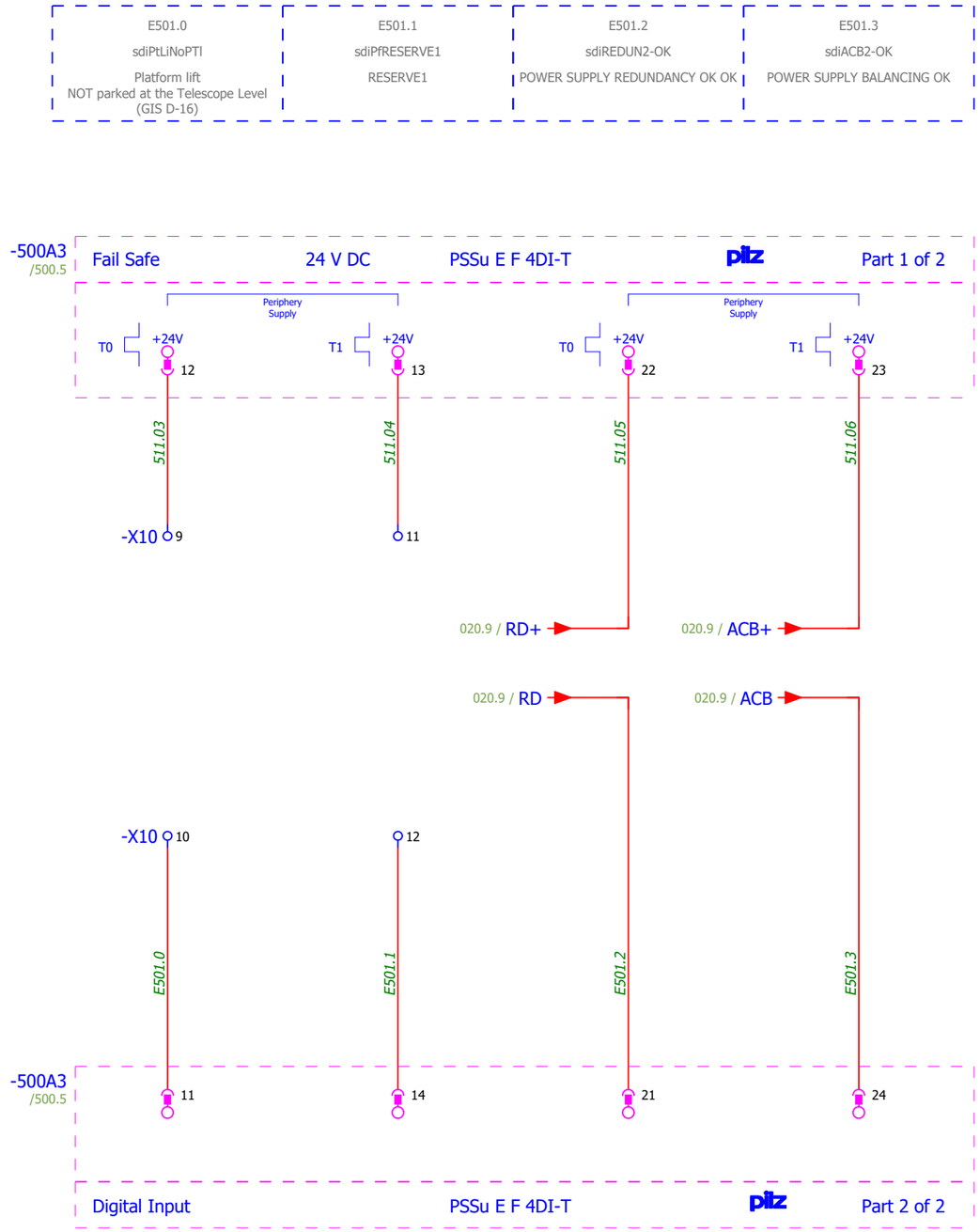

IK4 TEKNIKER
Research Alliance

IK4-TEKNIKER
AVDA. OTAOLA 20
20600 Eibar (Gipuzkoa) Spain
Tfno.:(+34) 943 206744
Fax: (+34) 943 202757
Web: www.tekniker.es

Date	17/09/2019	2.0	29/08/2019	JOSE MANUEL			
Reviewed	F.LÓPEZ GARCIA	3.0	17/09/2019	JOSE MANUEL			
Drew by	JOSE MANUEL	Review	Date	Name	Review	Date	Name

7186-GIS_LSST 7186

LSST Global Safety Interlock System Design

Replaces | Replaced by

SAFETY DIGITAL INPUTS

Customer: EMPRESARIOS AGRUPADOS
C/Magallanes, 3
28015
3098000
http://www.empresariosagrupados.es/

= E1
+ GIS-PfAux-CBT0101

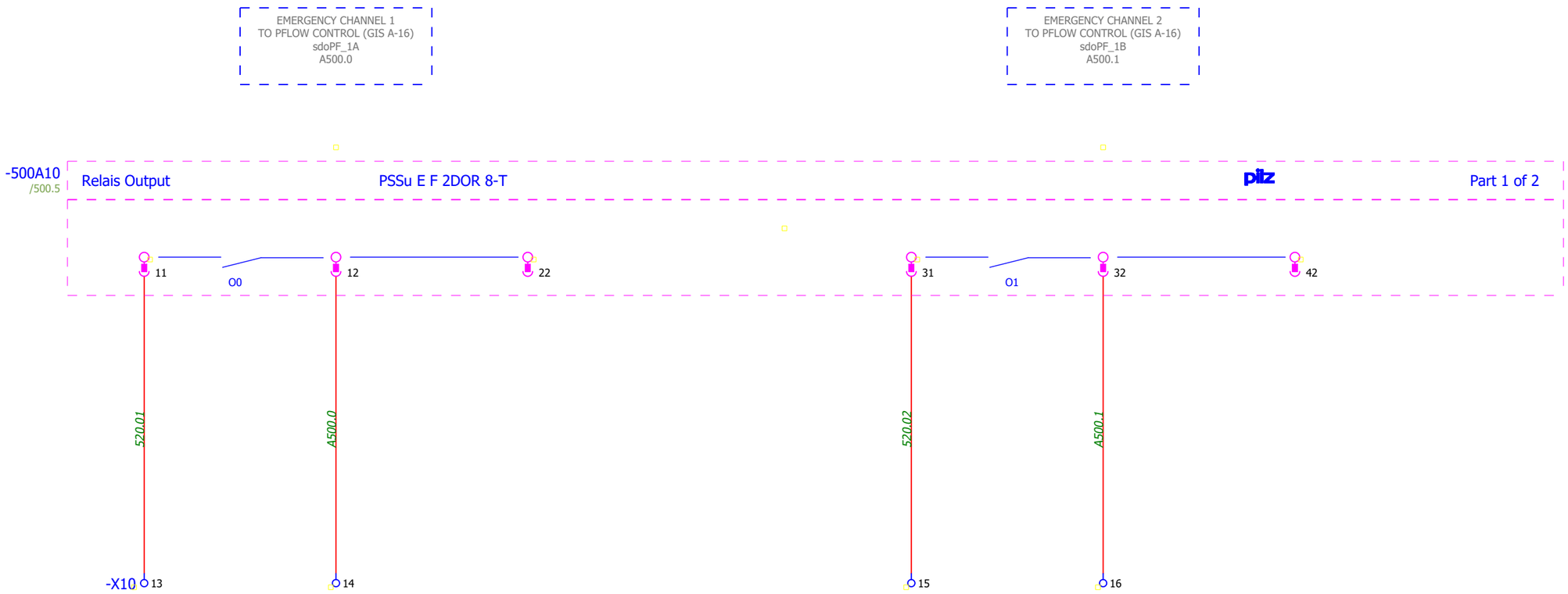

◁ 511

521 ▷

IK4 TEKNIKER Research Alliance
IK4-TEKNIKER
AVDA. OTAOLA 20
20600 Eibar (Gipuzkoa) Spain
Tfno.:(+34) 943 206744
Fax: (+34) 943 202757
Web: www.tekniker.es

Date	30/08/2022	2.0	29/08/2019	JOSE MANUEL			
Reviewed	F.LÓPEZ GARCIA	3.0	17/09/2019	JOSE MANUEL			
Drew by	JOSE MANUEL	Review	Date	Name	Review	Date	Name

7186-GIS_LSST 7186
LSST Global Safety Interlock System Design

Replaces | Replaced by

SAFETY DIGITAL OUTPUTS

Customer: EMPRESARIOS AGRUPADOS
C/Magallanes, 3
28015
3098000
http://www.empresariosagrupados.es/

= E1
+ GIS-PfAux-CBT0101

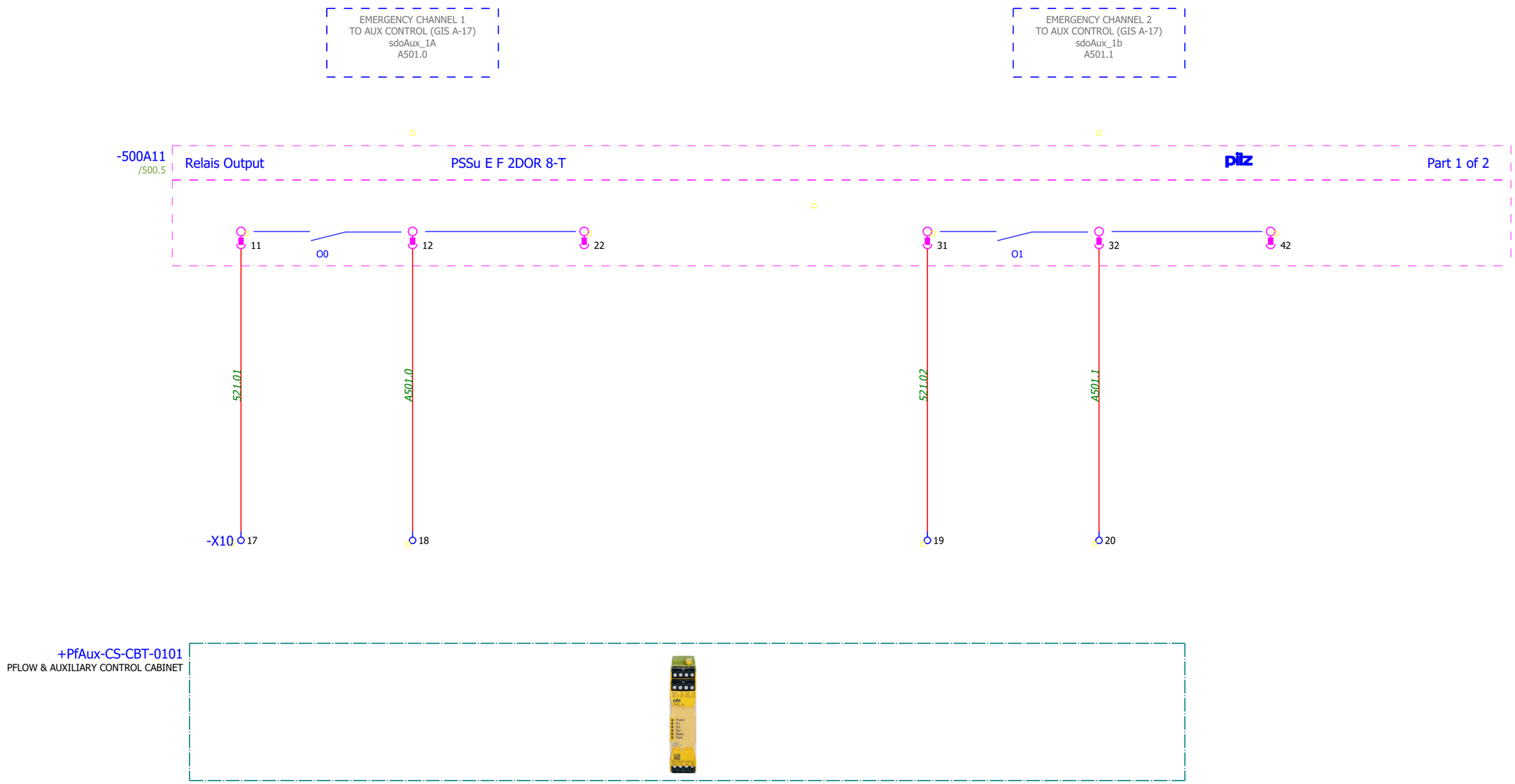

IK4 TEKNIKER Research Alliance

IK4-TEKNIKER
AVDA. OTAOLA 20
20600 Eibar (Gipuzkoa) Spain
Tfno.:(+34) 943 206744
Fax: (+34) 943 202757
Web: www.tekniker.es

Date	30/08/2022	2.0	29/08/2019	JOSE MANUEL			
Reviewed	F.LÓPEZ GARCIA	3.0	17/09/2019	JOSE MANUEL			
Drew by	JOSE MANUEL	Review	Date	Name	Review	Date	Name

7186-GIS_LSST 7186

LSST Global Safety Interlock System Design

Replaces | Replaced by

SAFETY DIGITAL OUTPUTS

Customer: EMPRESARIOS AGRUPADOS
C/Magallanes, 3
28015
3098000
http://www.empresariosagrupados.es/

= E1
+ GIS-PfAux-CBT0101

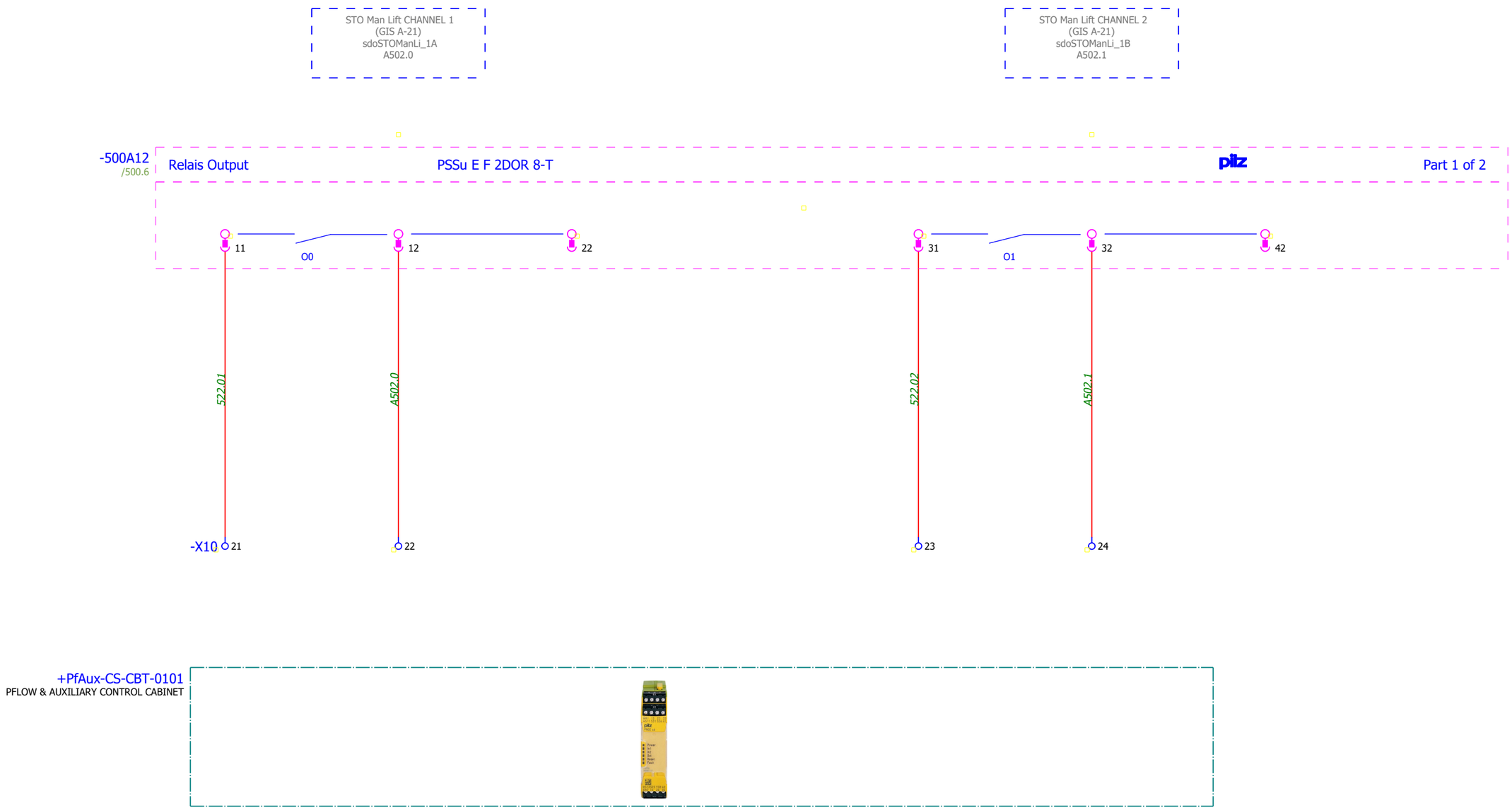

IK4 TEKNIKER Research Alliance
IK4-TEKNIKER
AVDA. OTAOLA 20
20600 Eibar (Gipuzkoa) Spain
Tfno.:(+34) 943 206744
Fax: (+34) 943 202757
Web: www.tekniker.es

Date	30/08/2022	2.0	29/08/2019	JOSE MANUEL				
Reviewed	F.LÓPEZ GARCIA	3.0	17/09/2019	JOSE MANUEL				
Drew by	JOSE MANUEL	Review	Date	Name	Review	Date	Name	

7186-GIS_LSST 7186
LSST Global Safety Interlock System Design

Replaces | Replaced by

SAFETY DIGITAL OUTPUTS

Customer: EMPRESARIOS AGRUPADOS
C/Magallanes, 3
28015
3098000
http://www.empresariosagrupados.es/

= E1
+ GIS-PfAux-CBT0101

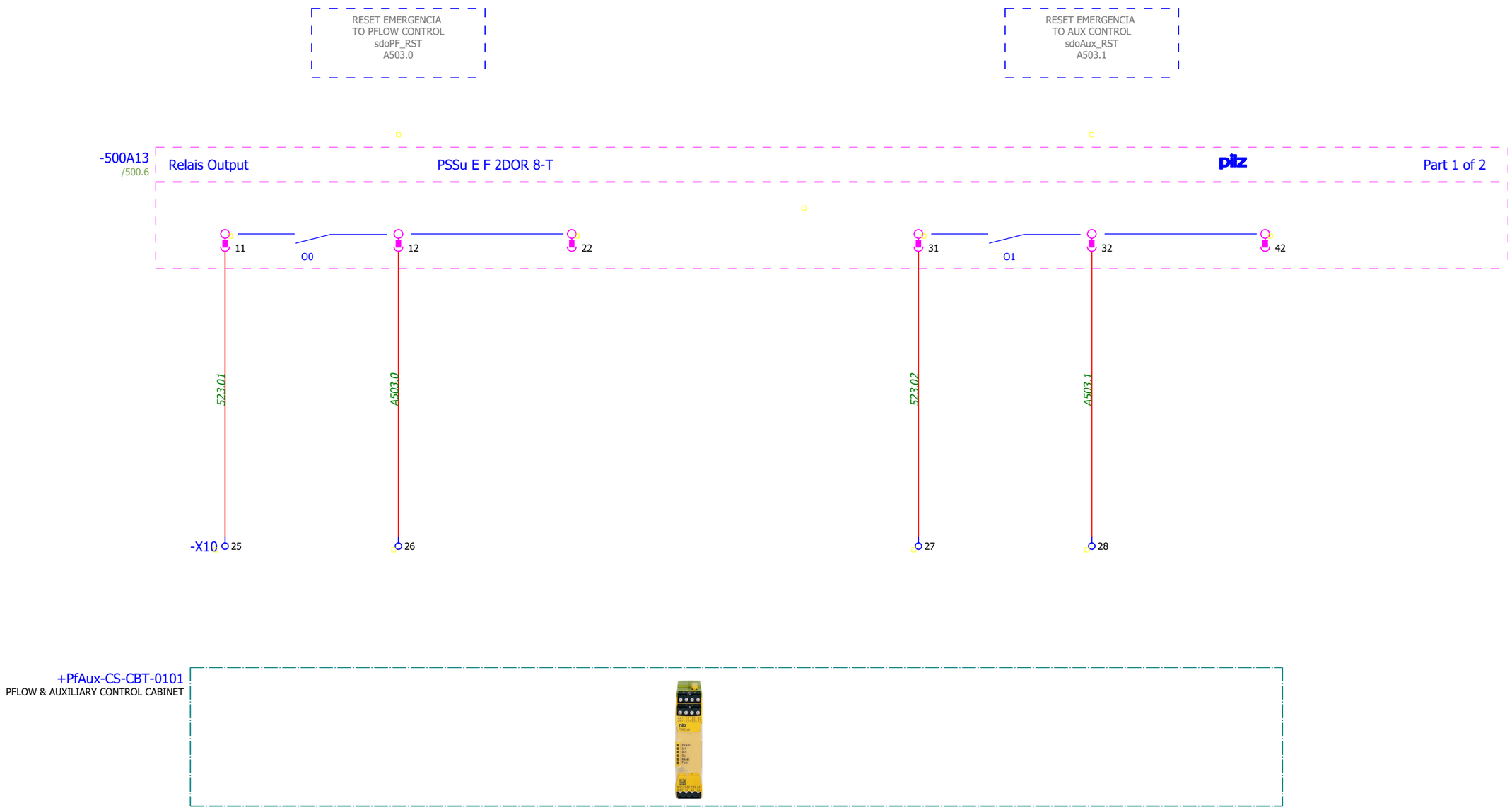

IK4 TEKNIKER Research Alliance

IK4-TEKNIKER
AVDA. OTAOLA 20
20600 Eibar (Gipuzkoa) Spain
Tfno.:(+34) 943 206744
Fax: (+34) 943 202757
Web: www.tekniker.es

Date	30/08/2022	2.0	29/08/2019	JOSE MANUEL			
Reviewed	F.LÓPEZ GARCIA	3.0	17/09/2019	JOSE MANUEL			
Drew by	JOSE MANUEL	Review	Date	Name	Review	Date	Name

7186-GIS_LSST 7186

LSST Global Safety Interlock System Design

Replaces | Replaced by

SAFETY DIGITAL OUTPUTS

Customer: EMPRESARIOS AGRUPADOS
C/Magallanes, 3
28015
3098000
http://www.empresariosagrupados.es/

= E1
+ GIS-PfAux-CBT0101

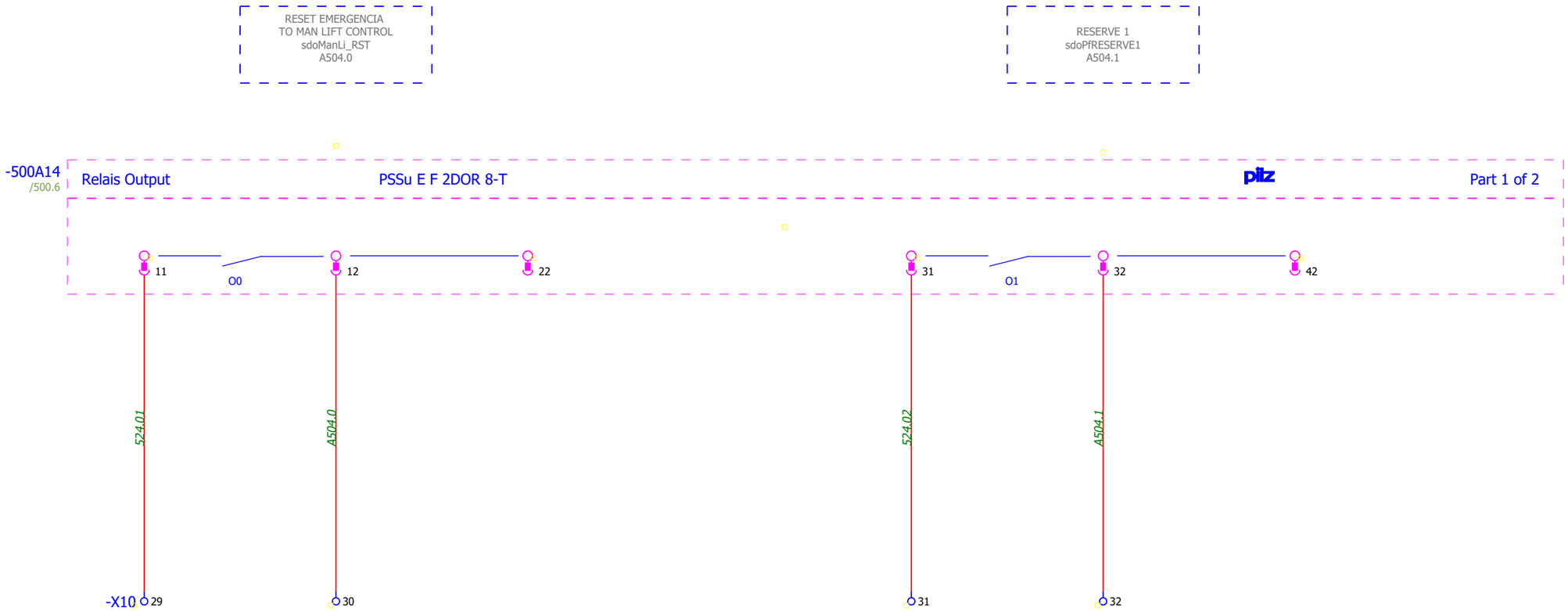

+PfAux-CS-CBT-0101
PFLOW & AUXILIARY CONTROL CABINET

IK4 TEKNIKER Research Alliance
IK4-TEKNIKER
AVDA. OTAOLA 20
20600 Eibar (Gipuzkoa) Spain
Tfno.:(+34) 943 206744
Fax: (+34) 943 202757
Web: www.tekniker.es

Date	30/08/2022	2.0	29/08/2019	JOSE MANUEL				
Reviewed	F.LÓPEZ GARCIA	3.0	17/09/2019	JOSE MANUEL				
Drew by	JOSE MANUEL	Review	Date	Name	Review	Date	Name	

7186-GIS_LSST 7186
LSST Global Safety Interlock System Design

Replaces | Replaced by

SAFETY DIGITAL OUTPUTS

Customer: EMPRESARIOS AGRUPADOS
C/Magallanes, 3
28015
3098000
http://www.empresariosagrupados.es/

= E1
+ GIS-PfAux-CBT0101

Customer

EMPRESARIOS AGRUPADOS

EMPRESARIOS AGRUPADOS

C/Magallanes, 3
28015
ESPAÑA
3098000

http://www.empresariosagrupados.es/

Project:

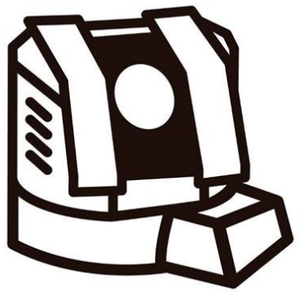

7186-GIS_LSST

7186

LSST Global Safety Interlock System Design

REPORT
REPORT

GIS-CPU-CBT0101
GIS CPU CABINET

Number of pages: 178

Made by:

IK4 TEKNIKER Research Alliance

IK4-TEKNIKER

AVDA. OTAOLA 20
20600 Eibar (Gipuzkoa) Spain
Tfno. : (+34) 943 206744
Fax : (+34) 943 202757
Web: www.tekniker.es

2.0	CHILE ASEMBLY	29/08/2019	JOSE MANUEL
3.0	CHILE ASEMBLY (Specific cabinets for M2CAM & PfAux)	17/09/2019	JOSE MANUEL
Review	Review description	Date	Reviewed

Drew by: J.M.CASTAÑO
Reviewed: F.LÓPEZ GARCIA
Date: 04/05/2017
Replaces:
Replaced by:

Parts list

TEKNIKER_v5

DEVICE TAG	PLACEMENT	DESCRIPTION	REFERENCE	MANUFACTURER
201A1	=E1/201.2	PMI 538 Operator terminal, analogue resistive touchscreen	264538	PILZ
210A1	=E1/210.0	SWITCH ETHERNET	IE-3000-8TC	CISCO
500A1	=E1/500.2	Compact programmable safety system f. decent.	PSSu H PLC1 314 070	PILZ
500A1	=E1/500.2	TERMINALS	PSSu A Con 2/8 C 313 111	PILZ
500A2	=E1/500.4	Safety digital input module	PSSu E F 4DI-T 314 200	PILZ
500A2	=E1/500.4	Base module Cage clamp terminal	PSSu BP 1/8 C-T 314 601	PILZ
500A3	=E1/500.5	Safety digital input module	PSSu E F 4DI-T 314 200	PILZ
500A3	=E1/500.5	Base module Cage clamp terminal	PSSu BP 1/8 C-T 314 601	PILZ
500A4	=E1/500.5	Safety digital input module	PSSu E F 4DI-T 314 200	PILZ
500A4	=E1/500.5	Base module Cage clamp terminal	PSSu BP 1/8 C-T 314 601	PILZ
500A5	=E1/500.5	Safety digital input module	PSSu E F 4DI-T 314 200	PILZ
500A5	=E1/500.5	Base module Cage clamp terminal	PSSu BP 1/8 C-T 314 601	PILZ
500A10	=E1/500.5	Safety digital output module	PSSu E F 2DOR 8-T 314 225	PILZ
500A10	=E1/500.5	Base module Cage clamp terminal	PSSu BP 2/16 C-T 314 629	PILZ
500A11	=E1/500.6	Safety digital output module	PSSu E F 2DOR 8-T 314 225	PILZ
500A11	=E1/500.6	Base module Cage clamp terminal	PSSu BP 2/16 C-T 314 629	PILZ
500A12	=E1/500.6	Safety digital output module	PSSu E F 2DOR 8-T 314 225	PILZ
500A12	=E1/500.6	Base module Cage clamp terminal	PSSu BP 2/16 C-T 314 629	PILZ
503A1	=E1/503.1	SWITCH ETHERNET	EDS408-MM-SC-7	MOXA
504A1	=E1/504.1	SWITCH ETHERNET	EDS408-MM-SC-7	MOXA
002F1	=E1/002.0	Miniature Circuit Breaker C 6A	A9F79306	SCHNEIDER ELECTRIC
020F1	=E1/020.1	Miniature Circuit Breaker C 6A	A9F79306	SCHNEIDER ELECTRIC
020F2	=E1/020.4	Miniature Circuit Breaker C 6A	A9F79306	SCHNEIDER ELECTRIC
028F1	=E1/028.2	Base element	2800929	PHOENIX CONTACT
028F1	=E1/028.2	Plug-in bridge	3030255	PHOENIX CONTACT
028F1	=E1/028.2	Plug-in bridge	3036958	PHOENIX CONTACT
028F1-F1	=E1/028.2	Thermomagnetic device circuit breaker	2800850	PHOENIX CONTACT
020G1	=E1/020.0	Power supply unit	2904620	PHOENIX CONTACT
020G2	=E1/020.4	Power supply unit	2904620	PHOENIX CONTACT
020G3	=E1/020.7	Redundancy module, with protective coating	2320173	PHOENIX CONTACT
PE	=E1/002.7	earth busbar	550220 TCB 20x5	ERICO
PE	=E1 (GIS-CPU.S2)	earth busbar	550220 TCB 20x5	ERICO
SH1 1	=E1/002.7	Connection terminal block	0404017	PHOENIX CONTACT
SH1 1	=E1/002.7	Support bracket	0404428	PHOENIX CONTACT
SH1 1	=E1/002.7	Support bracket	0404428	PHOENIX CONTACT
SH1 1	=E1/002.7	Neutral busbar	0402174	PHOENIX CONTACT
SH1 1	=E1 (GIS-CPU.S2)	Support bracket	0404428	PHOENIX CONTACT
SH1 1	=E1 (GIS-CPU.S2)	Support bracket	0404428	PHOENIX CONTACT
SH1 1	=E1 (GIS-CPU.S2)	Neutral busbar	0402174	PHOENIX CONTACT

Parts list

TEKNIKER_v5

DEVICE TAG	PLACEMENT	DESCRIPTION	REFERENCE	MANUFACTURER
U1	=E1 (GIS-CPU.S2)	NSYS3D6G12840P	NSYS3D6G12840P	SCHNEIDER ELECTRIC
U10	=E1 (GIS-CPU.S2)	Unex slotted trunking 80x43 in U23X	80.40.77	UNEX
U11	=E1 (GIS-CPU.S2)	Unex slotted trunking 80x43 in U23X	80.40.77	UNEX
U12	=E1 (GIS-CPU.S2)	Unex slotted trunking 80x43 in U23X	80.40.77	UNEX
U13	=E1 (GIS-CPU.S2)	Unex slotted trunking 80x60 in U23X	80.60.77	UNEX
U14	=E1 (GIS-CPU.S2)	Unex slotted trunking 80x60 in U23X	80.60.77	UNEX
U15	=E1 (GIS-CPU.S2)	Unex slotted trunking 80x43 in U23X	80.40.77	UNEX
U16	=E1 (GIS-CPU.S2)	Unex slotted trunking 80x43 in U23X	80.40.77	UNEX
U17	=E1 (GIS-CPU.S2)	Unex slotted trunking 80x60 in U23X	80.60.77	UNEX
U18	=E1 (GIS-CPU.S2)	Unex slotted trunking 80x60 in U23X	80.60.77	UNEX
U100	=E1 (GIS-CPU.S2)	Mounting rail EN 50 022 (35x15)	TS 35_15	...
U101	=E1 (GIS-CPU.S2)	Mounting rail EN 50 022 (35x15)	TS 35_15	...
U102	=E1 (GIS-CPU.S2)	Mounting rail EN 50 022 (35x15)	TS 35_15	...
U103	=E1 (GIS-CPU.S2)	Mounting rail EN 50 022 (35x15)	TS 35_15	...
221U1	=E1/221.1	FO converters	2891315	PHOENIX CONTACT
221U2	=E1/221.5	FO converters	2891315	PHOENIX CONTACT
222U1	=E1/222.1	FO converters	2891315	PHOENIX CONTACT
222U2	=E1/222.5	FO converters	2891315	PHOENIX CONTACT
210W1	=E1/210.4	WHITE ETH CABLE	BLB.C6PC70S-WH-7	BLACK BOX
502W1	=E1/502.4	YELOW ETH CABLE	BLB.C6PC70S-YE-5	BLACK BOX
503W1	=E1/503.8	YELOW ETH CABLE	BLB.C6PC70S-YE-5	BLACK BOX
503W3	=E1/503.6	YELOW ETH CABLE	BLB.C6PC70S-YE-5	BLACK BOX
503W4	=E1/503.7	YELOW ETH CABLE	BLB.C6PC70S-YE-5	BLACK BOX
503W5	=E1/503.7	YELOW ETH CABLE	BLB.C6PC70S-YE-5	BLACK BOX
503W6	=E1/503.7	WHITE ETH CABLE	BLB.C6PC70S-WH-7	BLACK BOX
504W1	=E1/504.6	YELOW ETH CABLE	BLB.C6PC70S-YE-5	BLACK BOX
X1	=E1/002.8	End bracket	3022276	PHOENIX CONTACT
X1 1	=E1/002.0	Feed-through terminal block "Push-in" PT 2,5	3209510	PHOENIX CONTACT
X1 1	=E1/002.0	End cover ST-PT 2,5	3030417	Phoenix Contact
X1 1	=E1/002.0	End bracket	3022276	PHOENIX CONTACT
X1 1	=E1/002.0	End bracket	3022276	PHOENIX CONTACT
X1 2	=E1/002.1	Feed-through terminal block "Push-in" PT 2,5	3209510	PHOENIX CONTACT
X1 3	=E1/002.1	Feed-through terminal block "Push-in" PT 2,5	3209510	PHOENIX CONTACT
X2	=E1/002.8	End bracket	3022276	PHOENIX CONTACT
X2	=E1/002.8	End bracket	3022276	PHOENIX CONTACT
X2 1	=E1/002.0	Feed-through terminal block "Push-in" PT 2,5	3209510	PHOENIX CONTACT
X2 1	=E1/002.0	3 ST2,5 busbar	3030174	PHOENIX CONTACT
X2 2	=E1/020.5	Feed-through terminal block "Push-in" PT 2,5	3209510	PHOENIX CONTACT
X2 3	=E1/020.6	Feed-through terminal block "Push-in" PT 2,5	3209510	PHOENIX CONTACT

Parts list

TEKNIKER_v5

DEVICE TAG		PLACEMENT	DESCRIPTION	REFERENCE	MANUFACTURER
X2	4	=E1/002.1	Feed-through terminal block "Push-in" PT 2,5	3209510	PHOENIX CONTACT
X2	4	=E1/002.1	3 ST2,5 busbar	3030174	PHOENIX CONTACT
X2	5	=E1/020.5	Feed-through terminal block "Push-in" PT 2,5	3209510	PHOENIX CONTACT
X2	6	=E1/020.6	Feed-through terminal block "Push-in" PT 2,5	3209510	PHOENIX CONTACT
X2	7	=E1/002.1	Feed-through terminal block "Push-in" PT 2,5	3209510	PHOENIX CONTACT
X2	7	=E1/002.1	3 ST2,5 busbar	3030174	PHOENIX CONTACT
X2	8	=E1/020.5	Feed-through terminal block "Push-in" PT 2,5	3209510	PHOENIX CONTACT
X2	9	=E1/020.6	Feed-through terminal block "Push-in" PT 2,5	3209510	PHOENIX CONTACT
X2	9	=E1/020.6	End cover ST-PT 2,5	3030417	PHOENIX CONTACT
X2	10	=E1/028.2	Feed-through terminal block "Push-in" PT 2,5	3209510	PHOENIX CONTACT
X2	10	=E1/028.2	2 ST2,5 busbar	3030161	PHOENIX CONTACT
X2	11	=E1/028.5	Feed-through terminal block "Push-in" PT 2,5	3209510	PHOENIX CONTACT
X2	11	=E1/028.5	End cover ST-PT 2,5	3030417	PHOENIX CONTACT
X2	12	=E1/028.3	Feed-through terminal block "Push-in" PT 2,5	3209510	PHOENIX CONTACT
X2	12	=E1/028.3	2,5/4-1,5/S reduction busbar	3214356	PHOENIX CONTACT
X2	13	=E1/501.5	Feed-through terminal block PT 1,5/S	3208100	PHOENIX CONTACT
X2	13	=E1/501.5	2 PT 1,5 busbar	FBS 2-3,5 3213014	PHOENIX CONTACT
X2	14	=E1/501.5	Feed-through terminal block PT 1,5/S	3208100	PHOENIX CONTACT
X2	15	=E1/028.3	Feed-through terminal block "Push-in" PT 2,5	3209510	PHOENIX CONTACT
X2	15	=E1/028.3	2,5/4-1,5/S reduction busbar	3214356	PHOENIX CONTACT
X2	16	=E1/501.5	Feed-through terminal block PT 1,5/S	3208100	PHOENIX CONTACT
X2	16	=E1/501.5	2 PT 1,5 busbar	FBS 2-3,5 3213014	PHOENIX CONTACT
X2	17	=E1/501.5	Feed-through terminal block PT 1,5/S	3208100	PHOENIX CONTACT
X2	17	=E1/501.5	End cover PT1,5	D-PT 1,5/S 3208142	Phoenix Contact
X2	18	=E1/028.4	Feed-through terminal block "Push-in" PT 2,5	3209510	PHOENIX CONTACT
X2	18	=E1/028.4	2,5/4-1,5/S reduction busbar	3214356	PHOENIX CONTACT
X2	19	=E1/201.3	Feed-through terminal block PT 1,5/S	3208100	PHOENIX CONTACT
X2	19	=E1/201.3	10 PT1,5 busbar	3213056	PHOENIX CONTACT
X2	20	=E1/221.1	Feed-through terminal block PT 1,5/S	3208100	PHOENIX CONTACT
X2	21	=E1/221.3	Feed-through terminal block PT 1,5/S	3208100	PHOENIX CONTACT
X2	22	=E1/222.1	Feed-through terminal block PT 1,5/S	3208100	PHOENIX CONTACT
X2	23	=E1/222.3	Feed-through terminal block PT 1,5/S	3208100	PHOENIX CONTACT
X2	24	=E1/501.2	Feed-through terminal block PT 1,5/S	3208100	PHOENIX CONTACT
X2	25	=E1/503.2	Feed-through terminal block PT 1,5/S	3208100	PHOENIX CONTACT
X2	26	=E1/504.2	Feed-through terminal block PT 1,5/S	3208100	PHOENIX CONTACT
X2	26	=E1/504.2	4 PT 1,5 busbar	FBS 4-3,5 3213030	PHOENIX CONTACT
X2	27	=E1/504.3	Feed-through terminal block PT 1,5/S	3208100	PHOENIX CONTACT
X2	28	=E1/504.3	Feed-through terminal block PT 1,5/S	3208100	PHOENIX CONTACT
X2	29	=E1/028.4	Feed-through terminal block "Push-in" PT 2,5	3209510	PHOENIX CONTACT

IK4 TEKNIKER Research Alliance

IK4-TEKNIKER
AVDA. OTAOLA 20
20600 Eibar (Gipuzkoa) Spain
Tfno.:(+34) 943 206744
Fax: (+34) 943 202757
Web: www.tekniker.es

Date	30/08/2022	2.0	29/08/2019	JOSE MANUEL			
Reviewed	F.LÓPEZ GARCIA	3.0	17/09/2019	JOSE MANUEL			
Drew by	JOSE MANUEL	Review	Date	Name	Review	Date	Name

7186-GIS_LSST 7186

LSST Global Safety Interlock System Design

Replaces | Replaced by

Parts list : PXC.3209510 - PXC.3209510

Customer: EMPRESARIOS AGRUPADOS
C/Magallanes, 3
28015
3098000
http://www.empresariosagrupados.es/

= REPORT
+ GIS-CPU-CBT0101

Parts list

TEKNIKER_v5

DEVICE TAG		PLACEMENT	DESCRIPTION	REFERENCE	MANUFACTURER
X2	29	=E1/028.4	2,5/4-1,5/S reduction busbar	3214356	PHOENIX CONTACT
X2	30	=E1/201.3	Feed-through terminal block PT 1,5/S	3208100	PHOENIX CONTACT
X2	30	=E1/201.3	10 PT1,5 busbar	3213056	PHOENIX CONTACT
X2	31	=E1/221.1	Feed-through terminal block PT 1,5/S	3208100	PHOENIX CONTACT
X2	32	=E1/221.3	Feed-through terminal block PT 1,5/S	3208100	PHOENIX CONTACT
X2	33	=E1/222.1	Feed-through terminal block PT 1,5/S	3208100	PHOENIX CONTACT
X2	34	=E1/222.3	Feed-through terminal block PT 1,5/S	3208100	PHOENIX CONTACT
X2	35	=E1/501.2	Feed-through terminal block PT 1,5/S	3208100	PHOENIX CONTACT
X2	36	=E1/503.2	Feed-through terminal block PT 1,5/S	3208100	PHOENIX CONTACT
X2	37	=E1/504.2	Feed-through terminal block PT 1,5/S	3208100	PHOENIX CONTACT
X2	37	=E1/504.2	4 PT 1,5 busbar	FBS 4-3,5 3213030	PHOENIX CONTACT
X2	38	=E1/504.3	Feed-through terminal block PT 1,5/S	3208100	PHOENIX CONTACT
X2	39	=E1/504.3	Feed-through terminal block PT 1,5/S	3208100	PHOENIX CONTACT
X2	40	=E1/504.3	Feed-through terminal block PT 1,5/S	3208100	PHOENIX CONTACT
X10		=E1/002.8	End bracket	3022276	PHOENIX CONTACT
X10		=E1/002.8	End bracket	3022276	PHOENIX CONTACT
X10	1	=E1/510.3	Feed-through terminal block PT 1,5/S	3208100	PHOENIX CONTACT
X10	2	=E1/510.3	Feed-through terminal block PT 1,5/S	3208100	PHOENIX CONTACT
X10	3	=E1/510.4	Feed-through terminal block PT 1,5/S	3208100	PHOENIX CONTACT
X10	4	=E1/510.4	Feed-through terminal block PT 1,5/S	3208100	PHOENIX CONTACT
X10	5	=E1/510.5	Feed-through terminal block PT 1,5/S	3208100	PHOENIX CONTACT
X10	6	=E1/510.5	Feed-through terminal block PT 1,5/S	3208100	PHOENIX CONTACT
X10	7	=E1/510.6	Feed-through terminal block PT 1,5/S	3208100	PHOENIX CONTACT
X10	8	=E1/510.6	Feed-through terminal block PT 1,5/S	3208100	PHOENIX CONTACT
X10	9	=E1/511.3	Feed-through terminal block PT 1,5/S	3208100	PHOENIX CONTACT
X10	10	=E1/511.3	Feed-through terminal block PT 1,5/S	3208100	PHOENIX CONTACT
X10	11	=E1/511.4	Feed-through terminal block PT 1,5/S	3208100	PHOENIX CONTACT
X10	12	=E1/511.4	Feed-through terminal block PT 1,5/S	3208100	PHOENIX CONTACT
X10	13	=E1/511.5	Feed-through terminal block PT 1,5/S	3208100	PHOENIX CONTACT
X10	14	=E1/511.5	Feed-through terminal block PT 1,5/S	3208100	PHOENIX CONTACT
X10	15	=E1/511.6	Feed-through terminal block PT 1,5/S	3208100	PHOENIX CONTACT
X10	16	=E1/511.6	Feed-through terminal block PT 1,5/S	3208100	PHOENIX CONTACT
X10	17	=E1/512.3	Feed-through terminal block PT 1,5/S	3208100	PHOENIX CONTACT
X10	18	=E1/512.3	Feed-through terminal block PT 1,5/S	3208100	PHOENIX CONTACT
X10	19	=E1/512.4	Feed-through terminal block PT 1,5/S	3208100	PHOENIX CONTACT
X10	20	=E1/512.4	Feed-through terminal block PT 1,5/S	3208100	PHOENIX CONTACT
X10	21	=E1/512.5	Feed-through terminal block PT 1,5/S	3208100	PHOENIX CONTACT
X10	22	=E1/512.5	Feed-through terminal block PT 1,5/S	3208100	PHOENIX CONTACT
X10	23	=E1/512.6	Feed-through terminal block PT 1,5/S	3208100	PHOENIX CONTACT

IK4 TEKNIKER Research Alliance

IK4-TEKNIKER
AVDA. OTAOLA 20
20600 Eibar (Gipuzkoa) Spain
Tfno.:(+34) 943 206744
Fax: (+34) 943 202757
Web: www.tekniker.es

Date	30/08/2022	2.0	29/08/2019	JOSE MANUEL			
Reviewed	F.LÓPEZ GARCIA	3.0	17/09/2019	JOSE MANUEL			
Drew by	JOSE MANUEL	Review	Date	Name	Review	Date	Name

7186-GIS_LSST 7186
LSST Global Safety Interlock System Design

Replaces | Replaced by

Parts list : PXC.3214356 - PXC.3208100

Customer: EMPRESARIOS AGRUPADOS
C/Magallanes, 3
28015
3098000
http://www.empresariosagrupados.es/

= REPORT
+ GIS-CPU-CBT0101

Parts list

TEKNIKER_v5

DEVICE TAG	PLACEMENT	DESCRIPTION	REFERENCE	MANUFACTURER
X10 24	=E1/512.6	Feed-through terminal block PT 1,5/S	3208100	PHOENIX CONTACT
X10 25	=E1/513.3	Feed-through terminal block PT 1,5/S	3208100	PHOENIX CONTACT
X10 26	=E1/513.3	Feed-through terminal block PT 1,5/S	3208100	PHOENIX CONTACT
X10 27	=E1/513.4	Feed-through terminal block PT 1,5/S	3208100	PHOENIX CONTACT
X10 28	=E1/513.4	Feed-through terminal block PT 1,5/S	3208100	PHOENIX CONTACT
X10 29	=E1/520.1	Feed-through terminal block PT 1,5/S	3208100	PHOENIX CONTACT
X10 30	=E1/520.2	Feed-through terminal block PT 1,5/S	3208100	PHOENIX CONTACT
X10 31	=E1/520.5	Feed-through terminal block PT 1,5/S	3208100	PHOENIX CONTACT
X10 32	=E1/520.6	Feed-through terminal block PT 1,5/S	3208100	PHOENIX CONTACT
X10 33	=E1/521.1	Feed-through terminal block PT 1,5/S	3208100	PHOENIX CONTACT
X10 34	=E1/521.2	Feed-through terminal block PT 1,5/S	3208100	PHOENIX CONTACT
X10 35	=E1/521.5	Feed-through terminal block PT 1,5/S	3208100	PHOENIX CONTACT
X10 36	=E1/521.6	Feed-through terminal block PT 1,5/S	3208100	PHOENIX CONTACT
X10 37	=E1/522.1	Feed-through terminal block PT 1,5/S	3208100	PHOENIX CONTACT
X10 38	=E1/522.2	Feed-through terminal block PT 1,5/S	3208100	PHOENIX CONTACT
X10 39	=E1/522.5	Feed-through terminal block PT 1,5/S	3208100	PHOENIX CONTACT
X10 40	=E1/522.6	Feed-through terminal block PT 1,5/S	3208100	PHOENIX CONTACT
X10 40	=E1/522.6	End cover PT1,5	D-PT 1,5/S 3208142	PHOENIX CONTACT

Terminal diagram

F13_001_TK_V2

Strip

=E1+GIS-CPU-CBT0101-X1

POWER IN

Function text	Cable name / Cable type	Target designation	Connection point	Terminal	Jumper	Wire	Target designation	Connection point	Cable name / Cable type	Page / column
400V 50Hz		-002F1	1	1		L1	L1			/002.0
=		-002F1	3	2		L2	L2			/002.1
=		-002F1	5	3		L3	L3			/002.1

IK4 TEKNIKER Research Alliance

IK4-TEKNIKER
AVDA. OTAOLA 20
20600 Eibar (Gipuzkoa) Spain
Tfno.:(+34) 943 206744
Fax: (+34) 943 202757
Web: www.tekniker.es

Date	21/02/2018	2.0	29/08/2019	JOSE MANUEL				
Reviewed	F.LÓPEZ GARCIA	3.0	17/09/2019	JOSE MANUEL				
Drew by	JOSE MANUEL	Review	Date	Name	Review	Date	Name	

7186-GIS_LSST 7186

LSST Global Safety Interlock System Design

Replaces | Replaced by

Terminal diagram
=E1+GIS-CPU-CBT0101-X1

Customer: EMPRESARIOS AGRUPADOS
C/Magallanes, 3
28015
3098000
http://www.empresariosagrupados.es/

= REPORT
+ GIS-CPU-CBT0101

Terminal diagram

F13_001_TK_V2

Strip

=E1+GIS-CPU-CBT0101-X2

DISTRIBUTION

Function text	Cable name / Cable type	Target designation	Connection point	Terminal	Jumper	Wire	Target designation	Connection point	Cable name / Cable type	Page / column
400V 50Hz		-020F1	1	1		L1.1	-002F1	2		/002.0
=				2		L1.1	-020F2	1		/020.5
=				3						/020.6
=		-020F1	3	4		L2.1	-002F1	4		/002.1
=				5		L2.1	-020F2	3		/020.5
=				6						/020.6
=		-020F1	5	7		L3.1	-002F1	6		/002.1
=				8		L3.1	-020F2	5		/020.5
=				9						/020.6
0V DISTRIBUTION				10		0V	0V			/028.2
=				11		0V				/028.5
24 VDC I/Os				12		+V2	-028F1	2.1		/028.3
=				13		+V2	-500A1-X2	X2		/501.5
=				14						/501.5
=				15						/028.3
=				16		0V2	-500A1-X2	X2		/501.5
=				17						/501.5
24 VDC CONTROL				18		+V1	+V			/028.4
=		-210A1-PWR1	1	19		+V1	-201A1	X1:3		/201.3
=		-221U1-X3	US1	20		+V1	-210A1-PWR2	1		/221.1
=		-221U2-X3	US1	21		+V1	-221U1-X3	US2		/221.3
=		-222U1-X3	US1	22		+V1	-221U2-X3	US2		/222.1
=		-222U2-X3	US1	23		+V1	-222U1-X3	US2		/222.3
=		-500A1-X1	X1	24		+V1	-222U2-X3	US2		/501.2
=		-503A1-VIN	5	25		+V1	-503A1-VIN	1		/503.2
=		-504A1-VIN	5	26		+V1	-504A1-VIN	1		/504.2
=				27						/504.3
=				28						/504.3
=				29						/028.4
=		-210A1-PWR1	2	30		0V1	-201A1	X1:2		/201.3
=		-221U1-X3	GND	31		0V1	-210A1-PWR2	2		/221.1
=		-221U2-X3	GND	32		0V1	-221U1-X3	GND		/221.3
=		-222U1-X3	GND	33		0V1	-221U2-X3	GND		/222.1
=		-222U2-X3	GND	34		0V1	-222U1-X3	GND		/222.3
=		-500A1-X1	X1	35		0V1	-222U2-X3	GND		/501.2

IK4 TEKNIKER Research Alliance

IK4-TEKNIKER
AVDA. OTAOLA 20
20600 Eibar (Gipuzkoa) Spain
Tfno.:(+34) 943 206744
Fax: (+34) 943 202757
Web: www.tekniker.es

Date	21/02/2018	2.0	29/08/2019	JOSE MANUEL				
Reviewed	F.LÓPEZ GARCIA	3.0	17/09/2019	JOSE MANUEL				
Drew by	JOSE MANUEL	Review	Date	Name	Review	Date	Name	

7186-GIS_LSST
LSST Global Safety Interlock System Design
7186

Replaces | Replaced by

Terminal diagram
=E1+GIS-CPU-CBT0101-X2

Customer: EMPRESARIOS AGRUPADOS
C/Magallanes, 3
28015
3098000
http://www.empresariosagrupados.es/

= REPORT
+ GIS-CPU-CBT0101

Terminal diagram

F13_001_TK_V2

Strip

=E1+GIS-CPU-CBT0101-X2

DISTRIBUTION

Function text	Cable name / Cable type	Target designation	Connection point	Terminal	Jumper	Wire	Target designation	Connection point	Cable name / Cable type	Page / column
24 VDC CONTROL		-503A1-VIN	6	36		0V1	-503A1-VIN	2		/503.2
=		-504A1-VIN	6	37		0V1	-504A1-VIN	2		/504.2
=				38						/504.3
=				39						/504.3
=				40						/504.3

IK4 TEKNIKER Research Alliance

IK4-TEKNIKER
AVDA. OTAOLA 20
20600 Eibar (Gipuzkoa) Spain
Tfno.:(+34) 943 206744
Fax: (+34) 943 202757
Web: www.tekniker.es

Date	21/02/2018	2.0	29/08/2019	JOSE MANUEL				
Reviewed	F.LÓPEZ GARCIA	3.0	17/09/2019	JOSE MANUEL				
Drew by	JOSE MANUEL	Review	Date	Name	Review	Date	Name	

7186-GIS_LSST 7186

LSST Global Safety Interlock System Design

Replaces | Replaced by

Terminal diagram
=E1+GIS-CPU-CBT0101-X2

Customer: EMPRESARIOS AGRUPADOS

EMPRESARIOS AGRUPADOS
C/Magallanes, 3
28015
3098000
http://www.empresariosagrupados.es/

= REPORT
+ GIS-CPU-CBT0101

Terminal diagram

F13_001_TK_V2

Strip

=E1+GIS-CPU-CBT0101-X10

FIELD CONNECTIONS

Function text	Cable name	Cable type	Target designation	Connection point	Terminal	Jumper	Wire	Target designation	Connection point	Cable type	Cable name	Page / column
wireless pushbutton					1	.	510.01	-500A2	12			/510.3
=					2	.	E0.0	-500A2	11			/510.3
=					3	.	510.02	-500A2	13			/510.4
=					4	.	E0.1	-500A2	14			/510.4
=					5	.	510.03	-500A2	22			/510.5
=					6	.	E0.2	-500A2	21			/510.5
=					7	.	510.04	-500A2	23			/510.6
=					8	.	E0.3	-500A2	24			/510.6
safe inputs reserve					9	.	511.01	-500A3	12			/511.3
=					10	.	E1.0	-500A3	11			/511.3
=					11	.	511.02	-500A3	13			/511.4
=					12	.	E1.1	-500A3	14			/511.4
=					13	.	511.03	-500A3	22			/511.5
=					14	.	E1.2	-500A3	21			/511.5
=					15	.	511.04	-500A3	23			/511.6
=					16	.	E1.3	-500A3	24			/511.6
=					17	.	512.01	-500A4	12			/512.3
=					18	.	E2.0	-500A4	11			/512.3
=					19	.	512.02	-500A4	13			/512.4
=					20	.	E2.1	-500A4	14			/512.4
=					21	.	512.03	-500A4	22			/512.5
=					22	.	E2.2	-500A4	21			/512.5
=					23	.	512.04	-500A4	23			/512.6
=					24	.	E2.3	-500A4	24			/512.6
=					25	.	513.03	-500A5	12			/513.3
=					26	.	E2.4	-500A5	11			/513.3
=					27	.	513.04	-500A5	13			/513.4
=			-500A5	14	28	.						/513.4
wireless emergency pushbutton RESET					29	.	520.01	-500A10	11			/520.1
=					30	.	A0.0	-500A10	12			/520.2
=					31	.	520.02	-500A10	31			/520.5
=					32	.	A0.1	-500A10	32			/520.6
gis fire indication					33	.	521.01	-500A11	11			/521.1
=					34	.	A1.0	-500A11	12			/521.2
=					35	.	521.02	-500A11	31			/521.5

IK4 TEKNIKER Research Alliance

IK4-TEKNIKER
AVDA. OTAOLA 20
20600 Eibar (Gipuzkoa) Spain
Tfno.:(+34) 943 206744
Fax: (+34) 943 202757
Web: www.tekniker.es

Date	21/02/2018	2.0	29/08/2019	JOSE MANUEL				
Reviewed	F.LÓPEZ GARCIA	3.0	17/09/2019	JOSE MANUEL				
Drew by	JOSE MANUEL	Review	Date	Name	Review	Date	Name	

7186-GIS_LSST 7186

LSST Global Safety Interlock System Design

Replaces | Replaced by

Terminal diagram
=E1+GIS-CPU-CBT0101-X10

Customer: EMPRESARIOS AGRUPADOS
C/Magallanes, 3
28015
3098000
http://www.empresariosagrupados.es/

= REPORT
+ GIS-CPU-CBT0101

Terminal diagram

F13_001_TK_V2

Strip

=E1+GIS-CPU-CBT0101-X10

FIELD CONNECTIONS

Function text	Cable name / Cable type	Target designation	Connection point	Terminal	Jumper	Wire	Target designation	Connection point	Cable name / Cable type	Page / column
gis fire indication				36	.	A1.1	-500A11	32		/521.6
safe output reserve				37	.	522.01	-500A12	11		/522.1
=				38	.	A2.0	-500A12	12		/522.2
=				39	.	522.02	-500A12	31		/522.5
=				40	.	A2.1	-500A12	32		/522.6

IK4 TEKNIKER Research Alliance

IK4-TEKNIKER
AVDA. OTAOLA 20
20600 Eibar (Gipuzkoa) Spain
Tfno.:(+34) 943 206744
Fax: (+34) 943 202757
Web: www.tekniker.es

Date	21/02/2018	2.0	29/08/2019	JOSE MANUEL				
Reviewed	F.LÓPEZ GARCIA	3.0	17/09/2019	JOSE MANUEL				
Drew by	JOSE MANUEL	Review	Date	Name	Review	Date	Name	

7186-GIS_LSST 7186

LSST Global Safety Interlock System Design

Replaces | Replaced by

Terminal diagram
=E1+GIS-CPU-CBT0101-X10

Customer: EMPRESARIOS AGRUPADOS
C/Magallanes, 3
28015
3098000
http://www.empresariosagrupados.es/

= REPORT
+ GIS-CPU-CBT0101

Cable overview

F10_003 - TK

Cable designation	from	to	Cable type	Condctrs	ø	Length	Function text
=E1-OF1	=E1-503A1-P7	=E1+TMA-PI-CS-CBT-0101-501A1-P7	SC MULTI-MODE OPTIC FIBER	2			OPTIC FIBER GISCPU-TMA_IS-PIER
=E1-OF2	=E1-503A1-P8	=E1+AUX-IS-A1	MULTI-MODE OPTIC FIBER	2			OPTIC FIBER GISCPU-AUXIS
=E1-OF3	=E1-504A1-P7	=E1+DOME-IS-A1	MULTI-MODE OPTIC FIBER	2			OPTIC FIBER GISCPU-DOMEIS
=E1-OF4	=E1-210A1-DP1	=E1+TCS-PC-FO	SC MULTI-MODE OPTIC FIBER				OPTIC FIBER GIS_CPU-TCS
=E1-OF5	=E1-210A1-DP2	=E1+GIS-CS-PC1-FO	SC MULTI-MODE OPTIC FIBER				OPTIC FIBER GIS_CPU-GIS_CS
=E1-OF6	=E1-221U1-X2	=E1+GIS-AcFiEa-CBT0101-220U1-X2	SC MULTI-MODE OPTIC FIBER	2			OPTIC FIBER GIS_CPU-GIS_FIRE_EARTHQUAKE
=E1-OF7	=E1-221U2-X2	=E1+GIS-PfAux-CBT0101-220U1-X2	SC MULTI-MODE OPTIC FIBER	2			OPTIC FIBER GIS_CPU-GIS_PFLOW_AUX
=E1-OF8	=E1-222U1-X2	=E1+GIS-M2CAM-CBT0101-220U1-X2	SC MULTI-MODE OPTIC FIBER	2			OPTIC FIBER GIS_CPU-GIS_M2_CAM
=E1-OF9	=E1-222U2-X2	=E1+GIS-LASER-CBT0101-220U1-X2	SC MULTI-MODE OPTIC FIBER	2			OPTIC FIBER GIS_CPU-GIS_LASER
=E1-OF11	=E1-504A1-P8	=E1+GIS-M1M3-504A1	MULTI-MODE OPTIC FIBER	2			OPTIC FIBER GISCPU-DOMEIS
=E1-210W1	=E1-210A1-DP2	=E1-500A1	WH ETH CAT6	5	1	2,1	ETH PILZ WHITE
=E1-502W1	=E1-500A1	=E1-503A1-P8	YE ETH CAT6	5	1	1,5	SafetyNet-GIS_CPU YELOW
=E1-503W1	=E1-503A1-P8	=E1-504A1-P8	YE ETH CAT6	5	1	1,5	SafetyNet-GIS_SWITCH YELOW
=E1-503W3	=E1-222U2-X1	=E1-503A1-P8	YE ETH CAT6	5	1	1,5	SafetyNet-GIS_LASER YELOW
=E1-503W4	=E1-221U1-X1	=E1-503A1-P8	YE ETH CAT6	5	1	1,5	SafetyNet-GIS_FIRE YELOW
=E1-503W5	=E1-221U2-X1	=E1-503A1-P8	YE ETH CAT6	5	1	1,5	SafetyNet-GIS_PFLOW YELOW
=E1-503W6	=E1-201A1	=E1-503A1-P8	WH ETH CAT6	5	1	2,1	ETH HMI WHITE
=E1-504W1	=E1-222U1-X1	=E1-504A1-P8	YE ETH CAT6	5	1	1,5	SafetyNet-GIS_M2CAM YELOW

Cable diagram

F09_001_TK

Identificador de cable	Referencia Cable	no. of conductors	cross-section	cable length	function text
=E1+GIS-CPU-CBT0101-OF1	SC MULTI-MODE OPTIC FIBER	2			OPTIC FIBER GISCPU-TMA_IS-PIER

function text	X-Ref	ORIGEN	Pin Origen	conductor	Etiqueta Hilo	DESTINO	Pin Destino	X-Ref	function text
	/503.4	-503A1-P7	RX	**1**		+TMA-PI-CS-CBT-0101-501A1-P7	TX	/503.4	
	/503.4	-503A1-P7	TX	**2**		+TMA-PI-CS-CBT-0101-501A1-P7	RX	/503.4	

IK4 TEKNIKER Research Alliance

IK4-TEKNIKER
AVDA. OTAOLA 20
20600 Eibar (Gipuzkoa) Spain
Tfno.:(+34) 943 206744
Fax: (+34) 943 202757
Web: www.tekniker.es

Date	21/02/2018	2.0	29/08/2019	JOSE MANUEL				
Reviewed	F.LÓPEZ GARCIA	3.0	17/09/2019	JOSE MANUEL				
Drew by	JOSE MANUEL	Review	Date	Name	Review	Date	Name	

7186-GIS_LSST 7186

LSST Global Safety Interlock System Design

Replaces | Replaced by

Cable diagram
=E1+GIS-CPU-CBT0101-OF1

Customer: EMPRESARIOS AGRUPADOS

C/Magallanes, 3
28015
3098000

http://www.empresariosagrupados.es/

= REPORT
+ GIS-CPU-CBT0101

Cable diagram

F09_001_TK

Identificador de cable	Referencia Cable	no. of conductors	cross-section	cable length	function text
=E1+GIS-CPU-CBT0101-OF2	MULTI-MODE OPTIC FIBER	2			OPTIC FIBER GISCPU-AUXIS

function text	X-Ref	ORIGEN	Pin Origen	conductor	Etiqueta Hilo	DESTINO	Pin Destino	X-Ref	function text
	/503.5	-503A1-P8	RX	**1**		+AUX-IS-A1	TX	/503.5	
	/503.5	-503A1-P8	TX	**2**		+AUX-IS-A1	RX	/503.5	

IK4 TEKNIKER Research Alliance

IK4-TEKNIKER
AVDA. OTAOLA 20
20600 Eibar (Gipuzkoa) Spain
Tfno.:(+34) 943 206744
Fax: (+34) 943 202757
Web: www.tekniker.es

Date	21/02/2018	2.0	29/08/2019	JOSE MANUEL				
Reviewed	F.LÓPEZ GARCIA	3.0	17/09/2019	JOSE MANUEL				
Drew by	JOSE MANUEL	Review	Date	Name	Review	Date	Name	

7186-GIS_LSST 7186

LSST Global Safety Interlock System Design

Replaces | Replaced by

Cable diagram
=E1+GIS-CPU-CBT0101-OF2

Customer: EMPRESARIOS AGRUPADOS

C/Magallanes, 3
28015
3098000

http://www.empresariosagrupados.es/

= REPORT
+ GIS-CPU-CBT0101

Cable diagram

F09_001_TK

Identificador de cable	Referencia Cable	no. of conductors	cross-section	cable length	function text
=E1+GIS-CPU-CBT0101-OF3	MULTI-MODE OPTIC FIBER	2			OPTIC FIBER GISCPU-DOMEIS

function text	X-Ref	ORIGEN	Pin Origen	conductor	Etiqueta Hilo	DESTINO	Pin Destino	X-Ref	function text
	/504.4	-504A1-P7	RX	**1**		+DOME-IS-A1	TX	/504.4	
	/504.4	-504A1-P7	TX	**2**		+DOME-IS-A1	RX	/504.4	

IK4 TEKNIKER Research Alliance

IK4-TEKNIKER
AVDA. OTAOLA 20
20600 Eibar (Gipuzkoa) Spain
Tfno.:(+34) 943 206744
Fax: (+34) 943 202757
Web: www.tekniker.es

Date	21/02/2018	2.0	29/08/2019	JOSE MANUEL				
Reviewed	F.LÓPEZ GARCIA	3.0	17/09/2019	JOSE MANUEL				
Drew by	JOSE MANUEL	Review	Date	Name	Review	Date	Name	

7186-GIS_LSST 7186

LSST Global Safety Interlock System Design

Replaces | Replaced by

Cable diagram
=E1+GIS-CPU-CBT0101-OF3

Customer: EMPRESARIOS AGRUPADOS
C/Magallanes, 3
28015
3098000
http://www.empresariosagrupados.es/

= REPORT
+ GIS-CPU-CBT0101

Cable diagram

F09_001_TK

Identificador de cable	Referencia Cable	no. of conductors	cross-section	cable length	function text
=E1+GIS-CPU-CBT0101-OF4	SC MULTI-MODE OPTIC FIBER				OPTIC FIBER GIS_CPU-TCS

function text	X-Ref	ORIGEN	Pin Origen	conductor	Etiqueta Hilo	DESTINO	Pin Destino	X-Ref	function text
	/210.3	-210A1-DP1	IN	**1**		+TCS-PC-FO	OUT	/210.3	
	/210.3	-210A1-DP1	OUT	**2**		+TCS-PC-FO	IN	/210.3	

IK4 TEKNIKER Research Alliance

IK4-TEKNIKER
AVDA. OTAOLA 20
20600 Eibar (Gipuzkoa) Spain
Tfno.:(+34) 943 206744
Fax: (+34) 943 202757
Web: www.tekniker.es

Date	21/02/2018	2.0	29/08/2019	JOSE MANUEL				
Reviewed	F.LÓPEZ GARCIA	3.0	17/09/2019	JOSE MANUEL				
Drew by	JOSE MANUEL	Review	Date	Name	Review	Date	Name	

7186-GIS_LSST 7186

LSST Global Safety Interlock System Design

Replaces | Replaced by

Cable diagram
=E1+GIS-CPU-CBT0101-OF4

Customer: EMPRESARIOS AGRUPADOS

C/Magallanes, 3
28015
3098000

http://www.empresariosagrupados.es/

= REPORT
+ GIS-CPU-CBT0101

Cable diagram

F09_001_TK

Identificador de cable	Referencia Cable	no. of conductors	cross-section	cable length	function text
=E1+GIS-CPU-CBT0101-OF5	SC MULTI-MODE OPTIC FIBER				OPTIC FIBER GIS_CPU-GIS_CS

function text	X-Ref	ORIGEN	Pin Origen	conductor	Etiqueta Hilo	DESTINO	Pin Destino	X-Ref	function text
	/210.4	-210A1-DP2	IN	**1**		+GIS-CS-PC1-FO	OUT	/210.4	
	/210.4	-210A1-DP2	OUT	**2**		+GIS-CS-PC1-FO	IN	/210.4	

IK4 TEKNIKER Research Alliance

IK4-TEKNIKER
AVDA. OTAOLA 20
20600 Eibar (Gipuzkoa) Spain
Tfno.:(+34) 943 206744
Fax: (+34) 943 202757
Web: www.tekniker.es

Date	30/08/2022	2.0	29/08/2019	JOSE MANUEL				
Reviewed	F.LÓPEZ GARCIA	3.0	17/09/2019	JOSE MANUEL				
Drew by	JOSE MANUEL	Review	Date	Name	Review	Date	Name	

7186-GIS_LSST 7186

LSST Global Safety Interlock System Design

Replaces | Replaced by

Cable diagram
=E1+GIS-CPU-CBT0101-OF5

Customer:

EMPRESARIOS AGRUPADOS
C/Magallanes, 3
28015
3098000

http://www.empresariosagrupados.es/

= REPORT
+ GIS-CPU-CBT0101

Cable diagram

F09_001_TK

Identificador de cable	Referencia Cable	no. of conductors	cross-section	cable length	function text
=E1+GIS-CPU-CBT0101-OF6	SC MULTI-MODE OPTIC FIBER	2			OPTIC FIBER GIS_CPU-GIS_FIRE_EARTHQUAKE

function text	X-Ref	ORIGEN	Pin Origen	conductor	Etiqueta Hilo	DESTINO	Pin Destino	X-Ref	function text
	/221.3	-221U1-X2	RX	**1**		+GIS-AcFiEa-CBT0101-220U1-X2	TX	+GIS-AcFiEa-CBT0101/220.5	
	/221.3	-221U1-X2	TX	**2**		+GIS-AcFiEa-CBT0101-220U1-X2	RX	+GIS-AcFiEa-CBT0101/220.4	

IK4 TEKNIKER Research Alliance

IK4-TEKNIKER
AVDA. OTAOLA 20
20600 Eibar (Gipuzkoa) Spain
Tfno.:(+34) 943 206744
Fax: (+34) 943 202757
Web: www.tekniker.es

Date	21/02/2018	2.0	29/08/2019	JOSE MANUEL			
Reviewed	F.LÓPEZ GARCIA	3.0	17/09/2019	JOSE MANUEL			
Drew by	JOSE MANUEL	Review	Date	Name	Review	Date	Name

7186-GIS_LSST 7186

LSST Global Safety Interlock System Design

Replaces | Replaced by

Cable diagram
=E1+GIS-CPU-CBT0101-OF6

Customer: EMPRESARIOS AGRUPADOS
C/Magallanes, 3
28015
3098000
http://www.empresariosagrupados.es/

= REPORT
+ GIS-CPU-CBT0101

Cable diagram

F09_001_TK

Identificador de cable	Referencia Cable	no. of conductors	cross-section	cable length	function text
=E1+GIS-CPU-CBT0101-OF7	SC MULTI-MODE OPTIC FIBER	2			OPTIC FIBER GIS_CPU-GIS_PFLOW_AUX

function text	X-Ref	ORIGEN	Pin Origen	conductor	Etiqueta Hilo	DESTINO	Pin Destino	X-Ref	function text
	/221.7	-221U2-X2	RX	**1**		+GIS-PfAux-CBT0101-220U1	-X2 TX	+GIS-PfAux-CBT0101/220.5	
	/221.7	-221U2-X2	TX	**2**		+GIS-PfAux-CBT0101-220U1	-X2 RX	+GIS-PfAux-CBT0101/220.4	

◁ 3006

3008 ▷

IK4 TEKNIKER Research Alliance
IK4-TEKNIKER
AVDA. OTAOLA 20
20600 Eibar (Gipuzkoa) Spain
Tfno.:(+34) 943 206744
Fax: (+34) 943 202757
Web: www.tekniker.es

Date	30/08/2022	2.0	29/08/2019	JOSE MANUEL			
Reviewed	F.LÓPEZ GARCIA	3.0	17/09/2019	JOSE MANUEL			
Drew by	JOSE MANUEL	Review	Date	Name	Review	Date	Name

7186-GIS_LSST 7186
LSST Global Safety Interlock System Design

Replaces | Replaced by

Cable diagram
=E1+GIS-CPU-CBT0101-OF7

Customer: EMPRESARIOS AGRUPADOS
C/Magallanes, 3
28015
3098000
http://www.empresariosagrupados.es/

= REPORT
+ GIS-CPU-CBT0101

Cable diagram

F09_001_TK

Identificador de cable	Referencia Cable	no. of conductors	cross-section	cable length	function text
=E1+GIS-CPU-CBT0101-OF8	SC MULTI-MODE OPTIC FIBER	2			OPTIC FIBER GIS_CPU-GIS_M2_CAM

function text	X-Ref	ORIGEN	Pin Origen	conductor	Etiqueta Hilo	DESTINO	Pin Destino	X-Ref	function text
	/222.3	-222U1-X2	RX	**1**		+GIS-M2CAM-CBT0101-220U1-X2	TX	+GIS-M2CAM-CBT0101/220.5	
	/222.3	-222U1-X2	TX	**2**		+GIS-M2CAM-CBT0101-220U1-X2	RX	+GIS-M2CAM-CBT0101/220.4	

◁ 3007

3009 ▷

IK4 TEKNIKER Research Alliance
IK4-TEKNIKER
AVDA. OTAOLA 20
20600 Eibar (Gipuzkoa) Spain
Tfno.:(+34) 943 206744
Fax: (+34) 943 202757
Web: www.tekniker.es

Date	30/08/2022	2.0	29/08/2019	JOSE MANUEL			
Reviewed	F.LÓPEZ GARCIA	3.0	17/09/2019	JOSE MANUEL			
Drew by	JOSE MANUEL	Review	Date	Name	Review	Date	Name

7186-GIS_LSST 7186
LSST Global Safety Interlock System Design

Replaces | Replaced by

Cable diagram
=E1+GIS-CPU-CBT0101-OF8

Customer: EMPRESARIOS AGRUPADOS
C/Magallanes, 3
28015
3098000
http://www.empresariosagrupados.es/

= REPORT
+ GIS-CPU-CBT0101

Cable diagram

F09_001_TK

Identificador de cable	Referencia Cable	no. of conductors	cross-section	cable length	function text
=E1+GIS-CPU-CBT0101-OF9	SC MULTI-MODE OPTIC FIBER	2			OPTIC FIBER GIS_CPU-GIS_LASER

function text	X-Ref	ORIGEN	Pin Origen	conductor	Etiqueta Hilo	DESTINO	Pin Destino	X-Ref	function text
	/222.7	-222U2-X2	RX	**1**		+GIS-LASER-CBT0101-220U1-X2	TX	+GIS-LASER-CBT0101/220.5	
	/222.8	-222U2-X2	TX	**2**		+GIS-LASER-CBT0101-220U1-X2	RX	+GIS-LASER-CBT0101/220.4	

IK4 TEKNIKER Research Alliance

IK4-TEKNIKER
AVDA. OTAOLA 20
20600 Eibar (Gipuzkoa) Spain
Tfno.:(+34) 943 206744
Fax: (+34) 943 202757
Web: www.tekniker.es

Date	21/02/2018	2.0	29/08/2019	JOSE MANUEL				
Reviewed	F.LÓPEZ GARCIA	3.0	17/09/2019	JOSE MANUEL				
Drew by	JOSE MANUEL	Review	Date	Name	Review	Date	Name	

7186-GIS_LSST 7186

LSST Global Safety Interlock System Design

Replaces | Replaced by

Cable diagram
=E1+GIS-CPU-CBT0101-OF9

Customer: EMPRESARIOS AGRUPADOS

C/Magallanes, 3
28015
3098000

http://www.empresariosagrupados.es/

= REPORT
+ GIS-CPU-CBT0101

Cable diagram

F09_001_TK

Identificador de cable	Referencia Cable	no. of conductors	cross-section	cable length	function text
=E1+GIS-CPU-CBT0101-OF11	MULTI-MODE OPTIC FIBER	2			OPTIC FIBER GISCPU-DOMEIS

function text	X-Ref	ORIGEN	Pin Origen	conductor	Etiqueta Hilo	DESTINO	Pin Destino	X-Ref	function text
	/504.5	-504A1-P8	RX	**1**		+GIS-M1M3-504A1	TX	/504.5	
	/504.5	-504A1-P8	TX	**2**		+GIS-M1M3-504A1	RX	/504.5	

◁ 3009

3011 ▷

IK4 TEKNIKER Research Alliance
IK4-TEKNIKER
AVDA. OTAOLA 20
20600 Eibar (Gipuzkoa) Spain
Tfno.:(+34) 943 206744
Fax: (+34) 943 202757
Web: www.tekniker.es

Date	21/02/2018	2.0	29/08/2019	JOSE MANUEL			
Reviewed	F.LÓPEZ GARCIA	3.0	17/09/2019	JOSE MANUEL			
Drew by	JOSE MANUEL	Review	Date	Name	Review	Date	Name

7186-GIS_LSST 7186
LSST Global Safety Interlock System Design

Replaces | Replaced by

Cable diagram
=E1+GIS-CPU-CBT0101-OF11

Customer: EMPRESARIOS AGRUPADOS
C/Magallanes, 3
28015
3098000
http://www.empresariosagrupados.es/

= REPORT
+ GIS-CPU-CBT0101

Cable diagram

F09_001_TK

Identificador de cable	Referencia Cable	no. of conductors	cross-section	cable length	function text
=E1+GIS-CPU-CBT0101-210W1	WH ETH CAT6	5	1	2,1	ETH PILZ WHITE

function text	X-Ref	ORIGEN	Pin Origen	conductor	Etiqueta Hilo	DESTINO	Pin Destino	X-Ref	function text
	/210.4	-210A1-DP2	ETH	**ETH**		-500A1	-X3	/502.3	

◁ 3010

3012 ▷

IK4 TEKNIKER Research Alliance
IK4-TEKNIKER
AVDA. OTAOLA 20
20600 Eibar (Gipuzkoa) Spain
Tfno.:(+34) 943 206744
Fax: (+34) 943 202757
Web: www.tekniker.es

Date	21/02/2018	2.0	29/08/2019	JOSE MANUEL			
Reviewed	F.LÓPEZ GARCIA	3.0	17/09/2019	JOSE MANUEL			
Drew by	JOSE MANUEL	Review	Date	Name	Review	Date	Name

7186-GIS_LSST 7186
LSST Global Safety Interlock System Design

Replaces | Replaced by

Cable diagram
=E1+GIS-CPU-CBT0101-210W1

Customer: EMPRESARIOS AGRUPADOS
C/Magallanes, 3
28015
3098000
http://www.empresariosagrupados.es/

= REPORT
+ GIS-CPU-CBT0101

Cable diagram

F09_001_TK

Identificador de cable	Referencia Cable	no. of conductors	cross-section	cable length	function text
=E1+GIS-CPU-CBT0101-502W1	YE ETH CAT6	5	1	1,5	SafetyNet-GIS_CPU YELOW

function text	X-Ref	ORIGEN	Pin Origen	conductor	Etiqueta Hilo	DESTINO	Pin Destino	X-Ref	function text
	/502.5	-500A1	-X4	**ETH**		-503A1-P8	PORT1	/503.6	

IK4 TEKNIKER Research Alliance

IK4-TEKNIKER
AVDA. OTAOLA 20
20600 Eibar (Gipuzkoa) Spain
Tfno.:(+34) 943 206744
Fax: (+34) 943 202757
Web: www.tekniker.es

Date	30/08/2022	2.0	29/08/2019	JOSE MANUEL			
Reviewed	F.LÓPEZ GARCIA	3.0	17/09/2019	JOSE MANUEL			
Drew by	JOSE MANUEL	Review	Date	Name	Review	Date	Name

7186-GIS_LSST 7186

LSST Global Safety Interlock System Design

Replaces | Replaced by

Cable diagram
=E1+GIS-CPU-CBT0101-502W1

Customer: EMPRESARIOS AGRUPADOS

C/Magallanes, 3
28015
3098000

http://www.empresariosagrupados.es/

= REPORT
+ GIS-CPU-CBT0101

Cable diagram

F09_001_TK

Identificador de cable	Referencia Cable	no. of conductors	cross-section	cable length	function text
=E1+GIS-CPU-CBT0101-503W1	YE ETH CAT6	5	1	1,5	SafetyNet-GIS_SWITCH YELOW

function text	X-Ref	ORIGEN	Pin Origen	conductor	Etiqueta Hilo	DESTINO	Pin Destino	X-Ref	function text
	/503.8	-503A1-P8	PORT6	**ETH**		-504A1-P8	PORT1	/504.6	

IK4 TEKNIKER Research Alliance

IK4-TEKNIKER
AVDA. OTAOLA 20
20600 Eibar (Gipuzkoa) Spain
Tfno.:(+34) 943 206744
Fax: (+34) 943 202757
Web: www.tekniker.es

Date	30/08/2022	2.0	29/08/2019	JOSE MANUEL			
Reviewed	F.LÓPEZ GARCIA	3.0	17/09/2019	JOSE MANUEL			
Drew by	JOSE MANUEL	Review	Date	Name	Review	Date	Name

7186-GIS_LSST 7186

LSST Global Safety Interlock System Design

Replaces | Replaced by

Cable diagram
=E1+GIS-CPU-CBT0101-503W1

Customer: EMPRESARIOS AGRUPADOS
C/Magallanes, 3
28015
3098000
http://www.empresariosagrupados.es/

= REPORT
+ GIS-CPU-CBT0101

Cable diagram

F09_001_TK

Identificador de cable	Referencia Cable	no. of conductors	cross-section	cable length	function text
=E1+GIS-CPU-CBT0101-503W3	YE ETH CAT6	5	1	1,5	SafetyNet-GIS_LASER YELOW

function text	X-Ref	ORIGEN	Pin Origen	conductor	Etiqueta Hilo	DESTINO	Pin Destino	X-Ref	function text
	/222.8	-222U2-X1		**ETH**		-503A1-P8	PORT2	/503.6	

IK4 TEKNIKER Research Alliance

IK4-TEKNIKER
AVDA. OTAOLA 20
20600 Eibar (Gipuzkoa) Spain
Tfno.:(+34) 943 206744
Fax: (+34) 943 202757
Web: www.tekniker.es

Date	30/08/2022	2.0	29/08/2019	JOSE MANUEL			
Reviewed	F.LÓPEZ GARCIA	3.0	17/09/2019	JOSE MANUEL			
Drew by	JOSE MANUEL	Review	Date	Name	Review	Date	Name

7186-GIS_LSST 7186

LSST Global Safety Interlock System Design

Replaces | Replaced by

Cable diagram
=E1+GIS-CPU-CBT0101-503W3

Customer: EMPRESARIOS AGRUPADOS

C/Magallanes, 3
28015
3098000

http://www.empresariosagrupados.es/

= REPORT
+ GIS-CPU-CBT0101

Cable diagram

F09_001_TK

Identificador de cable	Referencia Cable	no. of conductors	cross-section	cable length	function text
=E1+GIS-CPU-CBT0101-503W4	YE ETH CAT6	5	1	1,5	SafetyNet-GIS_FIRE YELOW

function text	X-Ref	ORIGEN	Pin Origen	conductor	Etiqueta Hilo	DESTINO	Pin Destino	X-Ref	function text
	/221.4	-221U1-X1		**ETH**		-503A1-P8	PORT3	/503.7	

IK4 TEKNIKER Research Alliance

IK4-TEKNIKER
AVDA. OTAOLA 20
20600 Eibar (Gipuzkoa) Spain
Tfno.:(+34) 943 206744
Fax: (+34) 943 202757
Web: www.tekniker.es

Date	30/08/2022	2.0	29/08/2019	JOSE MANUEL				
Reviewed	F.LÓPEZ GARCIA	3.0	17/09/2019	JOSE MANUEL				
Drew by	JOSE MANUEL	Review	Date	Name	Review	Date	Name	

7186-GIS_LSST 7186

LSST Global Safety Interlock System Design

Replaces | Replaced by

Cable diagram
=E1+GIS-CPU-CBT0101-503W4

Customer: EMPRESARIOS AGRUPADOS

C/Magallanes, 3
28015
3098000

http://www.empresariosagrupados.es/

= REPORT
+ GIS-CPU-CBT0101

Cable diagram

F09_001_TK

Identificador de cable	Referencia Cable	no. of conductors	cross-section	cable length	function text
=E1+GIS-CPU-CBT0101-503W5	YE ETH CAT6	5	1	1,5	SafetyNet-GIS_PFLOW YELOW

function text	X-Ref	ORIGEN	Pin Origen	conductor	Etiqueta Hilo	DESTINO	Pin Destino	X-Ref	function text
	/221.8	-221U2-X1		**ETH**		-503A1-P8	PORT4	/503.7	

IK4 TEKNIKER Research Alliance

IK4-TEKNIKER
AVDA. OTAOLA 20
20600 Eibar (Gipuzkoa) Spain
Tfno.:(+34) 943 206744
Fax: (+34) 943 202757
Web: www.tekniker.es

Date	30/08/2022	2.0	29/08/2019	JOSE MANUEL				
Reviewed	F.LÓPEZ GARCIA	3.0	17/09/2019	JOSE MANUEL				
Drew by	JOSE MANUEL	Review	Date	Name	Review	Date	Name	

7186-GIS_LSST 7186

LSST Global Safety Interlock System Design

Replaces | Replaced by

Cable diagram
=E1+GIS-CPU-CBT0101-503W5

Customer: EMPRESARIOS AGRUPADOS

C/Magallanes, 3
28015
3098000

http://www.empresariosagrupados.es/

= REPORT
+ GIS-CPU-CBT0101

Cable diagram

F09_001_TK

Identificador de cable	Referencia Cable	no. of conductors	cross-section	cable length	function text
=E1+GIS-CPU-CBT0101-503W6	WH ETH CAT6	5	1	2,1	ETH HMI WHITE

function text	X-Ref	ORIGEN	Pin Origen	conductor	Etiqueta Hilo	DESTINO	Pin Destino	X-Ref	function text
	/201.5	-201A1	X8:Ethernet	**ETH**		-503A1-P8	PORT5	/503.7	

IK4 TEKNIKER Research Alliance

IK4-TEKNIKER
AVDA. OTAOLA 20
20600 Eibar (Gipuzkoa) Spain
Tfno.:(+34) 943 206744
Fax: (+34) 943 202757
Web: www.tekniker.es

Date	30/08/2022	2.0	29/08/2019	JOSE MANUEL				
Reviewed	F.LÓPEZ GARCIA	3.0	17/09/2019	JOSE MANUEL				
Drew by	JOSE MANUEL	Review	Date	Name	Review	Date	Name	

7186-GIS_LSST 7186

LSST Global Safety Interlock System Design

Replaces | Replaced by

Cable diagram
=E1+GIS-CPU-CBT0101-503W6

Customer: EMPRESARIOS AGRUPADOS

C/Magallanes, 3
28015
3098000

http://www.empresariosagrupados.es/

= REPORT
+ GIS-CPU-CBT0101

Cable diagram

F09_001_TK

Identificador de cable	Referencia Cable	no. of conductors	cross-section	cable length	function text
=E1+GIS-CPU-CBT0101-504W1	YE ETH CAT6	5	1	1,5	SafetyNet-GIS_M2CAM YELOW

function text	X-Ref	ORIGEN	Pin Origen	conductor	Etiqueta Hilo	DESTINO	Pin Destino	X-Ref	function text
	/222.4	-222U1-X1		**ETH**		-504A1-P8	PORT2	/504.6	

IK4 TEKNIKER Research Alliance

IK4-TEKNIKER
AVDA. OTAOLA 20
20600 Eibar (Gipuzkoa) Spain
Tfno.:(+34) 943 206744
Fax: (+34) 943 202757
Web: www.tekniker.es

Date	21/02/2018	2.0	29/08/2019	JOSE MANUEL				
Reviewed	F.LÓPEZ GARCIA	3.0	17/09/2019	JOSE MANUEL				
Drew by	JOSE MANUEL	Review	Date	Name	Review	Date	Name	

7186-GIS_LSST 7186

LSST Global Safety Interlock System Design

Replaces | Replaced by

Cable diagram
=E1+GIS-CPU-CBT0101-504W1

Customer: EMPRESARIOS AGRUPADOS

C/Magallanes, 3
28015
3098000

http://www.empresariosagrupados.es/

= REPORT
+ GIS-CPU-CBT0101

Customer

EMPRESARIOS AGRUPADOS

EMPRESARIOS AGRUPADOS
C/Magallanes, 3
28015
ESPAÑA
3098000

http://www.empresariosagrupados.es/

Project:

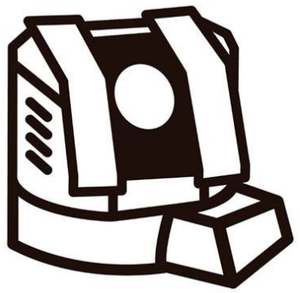

7186-GIS_LSST
7186
LSST Global Safety Interlock System Design

REPORT
REPORT

GIS-AcFiEa-CBT0101
GIS ACCESS FIRE EARTHQUAKE CABINET

Number of pages: 178

Made by:

IK4-TEKNIKER
AVDA. OTAOLA 20
20600 Eibar (Gipuzkoa) Spain
Tfno. : (+34) 943 206744
Fax : (+34) 943 202757
Web: www.tekniker.es

2.0	CHILE ASEMBLY	29/08/2019	JOSE MANUEL
3.0	CHILE ASEMBLY (Specific cabinets for M2CAM & PfAux)	17/09/2019	JOSE MANUEL
Review	Review description	Date	Reviewed

Drew by: J.M.CASTAÑO
Reviewed: F.LÓPEZ GARCIA
Date: 04/05/2017
Replaces:
Replaced by:

Parts list

TEKNIKER_v5

DEVICE TAG	PLACEMENT	DESCRIPTION	REFERENCE	MANUFACTURER
500A1	=E1/500.3	PSSu head module	PSSu H FS SN SDT 314 085	PILZ
500A1	=E1/500.3	TERMINALS	PSSu A Con 2/8 C 313 111	PILZ
500A2	=E1/500.4	Safety digital input module	PSSu E F 4DI-T 314 200	PILZ
500A2	=E1/500.4	Base module Cage clamp terminal	PSSu BP 1/8 C-T 314 601	PILZ
500A3	=E1/500.5	Safety digital input module	PSSu E F 4DI-T 314 200	PILZ
500A3	=E1/500.5	Base module Cage clamp terminal	PSSu BP 1/8 C-T 314 601	PILZ
500A4	=E1/500.5	Safety digital input module	PSSu E F 4DI-T 314 200	PILZ
500A4	=E1/500.5	Base module Cage clamp terminal	PSSu BP 1/8 C-T 314 601	PILZ
500A5	=E1/500.5	Safety digital input module	PSSu E F 4DI-T 314 200	PILZ
500A5	=E1/500.5	Base module Cage clamp terminal	PSSu BP 1/8 C-T 314 601	PILZ
500A10	=E1/500.5	Safety digital output module	PSSu E F 2DOR 8-T 314 225	PILZ
500A10	=E1/500.5	Base module Cage clamp terminal	PSSu BP 2/16 C-T 314 629	PILZ
500A11	=E1/500.6	Safety digital output module	PSSu E F 2DOR 8-T 314 225	PILZ
500A11	=E1/500.6	Base module Cage clamp terminal	PSSu BP 2/16 C-T 314 629	PILZ
500A12	=E1/500.6	Safety digital output module	PSSu E F 2DOR 8-T 314 225	PILZ
500A12	=E1/500.6	Base module Cage clamp terminal	PSSu BP 2/16 C-T 314 629	PILZ
500A13	=E1/500.6	Safety digital output module	PSSu E F 2DOR 8-T 314 225	PILZ
500A13	=E1/500.6	Base module Cage clamp terminal	PSSu BP 2/16 C-T 314 629	PILZ
002F1	=E1/002.0	Miniature Circuit Breaker C 6A	A9F79306	SCHNEIDER ELECTRIC
020F1	=E1/020.1	Miniature Circuit Breaker C 6A	A9F79306	SCHNEIDER ELECTRIC
020F2	=E1/020.4	Miniature Circuit Breaker C 6A	A9F79306	SCHNEIDER ELECTRIC
028F1	=E1/028.2	Base element	2800929	PHOENIX CONTACT
028F1	=E1/028.2	Plug-in bridge	3030255	PHOENIX CONTACT
028F1	=E1/028.2	Plug-in bridge	3036958	PHOENIX CONTACT
028F1-F1	=E1/028.2	Thermomagnetic device circuit breaker	2800850	PHOENIX CONTACT
020G1	=E1/020.0	Power supply unit	2904620	PHOENIX CONTACT
020G2	=E1/020.4	Power supply unit	2904620	PHOENIX CONTACT
020G3	=E1/020.7	Redundancy module, with protective coating	2320173	PHOENIX CONTACT
PE	=E1/002.7	earth busbar	550220 TCB 20x5	ERICO
PE	=E1 (GIS-AcFiea.S3)	earth busbar	550220 TCB 20x5	ERICO
002SH1 1	=E1/002.7	Connection terminal block	0404017	PHOENIX CONTACT
002SH1 1	=E1/002.7	Support bracket	0404428	PHOENIX CONTACT
002SH1 1	=E1/002.7	Support bracket	0404428	PHOENIX CONTACT
002SH1 1	=E1/002.7	Neutral busbar	0402174	PHOENIX CONTACT
002SH1 1	=E1 (GIS-AcFiea.S3)	Support bracket	0404428	PHOENIX CONTACT
002SH1 1	=E1 (GIS-AcFiea.S3)	Support bracket	0404428	PHOENIX CONTACT
002SH1 1	=E1 (GIS-AcFiea.S3)	Neutral busbar	0402174	PHOENIX CONTACT
U1	=E1 (GIS-AcFiea.S3)	NSYS3D6G8630P	NSYS3D6G8630P	SCHNEIDER ELECTRIC
U1	=E1 (GIS-AcFiea.S3)	Unex slotted trunking 80x43 in U23X	80.40.77	UNEX

Parts list

TEKNIKER_v5

DEVICE TAG		PLACEMENT	DESCRIPTION	REFERENCE	MANUFACTURER
U2		=E1 (GIS-AcFiea.S3)	Unex slotted trunking 80x43 in U23X	80.40.77	UNEX
U3		=E1 (GIS-AcFiea.S3)	Unex slotted trunking 80x60 in U23X	80.60.77	UNEX
U4		=E1 (GIS-AcFiea.S3)	Unex slotted trunking 80x60 in U23X	80.60.77	UNEX
U5		=E1 (GIS-AcFiea.S3)	Unex slotted trunking 80x43 in U23X	80.40.77	UNEX
U6		=E1 (GIS-AcFiea.S3)	Unex slotted trunking 80x43 in U23X	80.40.77	UNEX
U7		=E1 (GIS-AcFiea.S3)	Unex slotted trunking 80x60 in U23X	80.60.77	UNEX
U8		=E1 (GIS-AcFiea.S3)	Unex slotted trunking 80x60 in U23X	80.60.77	UNEX
U100		=E1 (GIS-AcFiea.S3)	Mounting rail EN 50 022 (35x15)	TS 35_15	...
U101		=E1 (GIS-AcFiea.S3)	Mounting rail EN 50 022 (35x15)	TS 35_15	...
U102		=E1 (GIS-AcFiea.S3)	Mounting rail EN 50 022 (35x15)	TS 35_15	...
220U1		=E1/220.2	FO converters	2891315	PHOENIX CONTACT
220W1		=E1/220.5	YELOW ETH CABLE	BLB.C6PC70S-YE-5	BLACK BOX
X1		=E1/002.8	End bracket	3022276	PHOENIX CONTACT
X1		=E1/002.8	End bracket	3022276	PHOENIX CONTACT
X1	1	=E1/002.0	Feed-through terminal block "Push-in" PT 2,5	3209510	PHOENIX CONTACT
X1	2	=E1/002.1	Feed-through terminal block "Push-in" PT 2,5	3209510	PHOENIX CONTACT
X1	3	=E1/002.1	Feed-through terminal block "Push-in" PT 2,5	3209510	PHOENIX CONTACT
X1	3	=E1/002.1	End cover ST-PT 2,5	3030417	Phoenix Contact
X2		=E1/002.8	End bracket	3022276	PHOENIX CONTACT
X2		=E1/002.8	End bracket	3022276	PHOENIX CONTACT
X2	1	=E1/002.0	Feed-through terminal block "Push-in" PT 2,5	3209510	PHOENIX CONTACT
X2	1	=E1/002.0	3 ST2,5 busbar	3030174	PHOENIX CONTACT
X2	2	=E1/020.5	Feed-through terminal block "Push-in" PT 2,5	3209510	PHOENIX CONTACT
X2	3	=E1/020.6	Feed-through terminal block "Push-in" PT 2,5	3209510	PHOENIX CONTACT
X2	4	=E1/002.1	Feed-through terminal block "Push-in" PT 2,5	3209510	PHOENIX CONTACT
X2	4	=E1/002.1	3 ST2,5 busbar	3030174	PHOENIX CONTACT
X2	5	=E1/020.5	Feed-through terminal block "Push-in" PT 2,5	3209510	PHOENIX CONTACT
X2	6	=E1/020.6	Feed-through terminal block "Push-in" PT 2,5	3209510	PHOENIX CONTACT
X2	7	=E1/002.1	Feed-through terminal block "Push-in" PT 2,5	3209510	PHOENIX CONTACT
X2	7	=E1/002.1	3 ST2,5 busbar	3030174	PHOENIX CONTACT
X2	8	=E1/020.5	Feed-through terminal block "Push-in" PT 2,5	3209510	PHOENIX CONTACT
X2	9	=E1/020.6	Feed-through terminal block "Push-in" PT 2,5	3209510	PHOENIX CONTACT
X2	9	=E1/020.6	End cover ST-PT 2,5	3030417	PHOENIX CONTACT
X2	10	=E1/028.2	Feed-through terminal block "Push-in" PT 2,5	3209510	PHOENIX CONTACT
X2	10	=E1/028.2	2 ST2,5 busbar	3030161	PHOENIX CONTACT
X2	11	=E1/028.5	Feed-through terminal block "Push-in" PT 2,5	3209510	PHOENIX CONTACT
X2	11	=E1/028.5	End cover ST-PT 2,5	3030417	PHOENIX CONTACT
X2	12	=E1/028.3	Feed-through terminal block "Push-in" PT 2,5	3209510	PHOENIX CONTACT
X2	12	=E1/028.3	2,5/4-1,5/S reduction busbar	3214356	PHOENIX CONTACT

Parts list

TEKNIKER_v5

DEVICE TAG		PLACEMENT	DESCRIPTION	REFERENCE	MANUFACTURER
X2	13	=E1/501.3	Feed-through terminal block PT 1,5/S	3208100	PHOENIX CONTACT
X2	13	=E1/501.3	3 pt-1,5 busbar	3213027	PHOENIX CONTACT
X2	14	=E1/501.4	Feed-through terminal block PT 1,5/S	3208100	PHOENIX CONTACT
X2	15	=E1/501.4	Feed-through terminal block PT 1,5/S	3208100	PHOENIX CONTACT
X2	16	=E1/028.3	Feed-through terminal block "Push-in" PT 2,5	3209510	PHOENIX CONTACT
X2	16	=E1/028.3	2,5/4-1,5/S reduction busbar	3214356	PHOENIX CONTACT
X2	17	=E1/501.3	Feed-through terminal block PT 1,5/S	3208100	PHOENIX CONTACT
X2	17	=E1/501.3	3 pt-1,5 busbar	3213027	PHOENIX CONTACT
X2	18	=E1/501.4	Feed-through terminal block PT 1,5/S	3208100	PHOENIX CONTACT
X2	19	=E1/501.4	Feed-through terminal block PT 1,5/S	3208100	PHOENIX CONTACT
X2	19	=E1/501.4	End cover PT1,5	D-PT 1,5/S 3208142	PHOENIX CONTACT
X2	20	=E1/028.4	Feed-through terminal block "Push-in" PT 2,5	3209510	PHOENIX CONTACT
X2	20	=E1/028.4	2,5/4-1,5/S reduction busbar	3214356	PHOENIX CONTACT
X2	21	=E1/220.6	Feed-through terminal block PT 1,5/S	3208100	PHOENIX CONTACT
X2	21	=E1/220.6	3 pt-1,5 busbar	3213027	PHOENIX CONTACT
X2	22	=E1/501.1	Feed-through terminal block PT 1,5/S	3208100	PHOENIX CONTACT
X2	23	=E1/501.2	Feed-through terminal block PT 1,5/S	3208100	PHOENIX CONTACT
X2	24	=E1/028.4	Feed-through terminal block "Push-in" PT 2,5	3209510	PHOENIX CONTACT
X2	24	=E1/028.4	2,5/4-1,5/S reduction busbar	3214356	PHOENIX CONTACT
X2	25	=E1/220.6	Feed-through terminal block PT 1,5/S	3208100	PHOENIX CONTACT
X2	25	=E1/220.6	3 pt-1,5 busbar	3213027	PHOENIX CONTACT
X2	26	=E1/501.2	Feed-through terminal block PT 1,5/S	3208100	PHOENIX CONTACT
X2	27	=E1/501.2	Feed-through terminal block PT 1,5/S	3208100	PHOENIX CONTACT
X2	27	=E1/501.2	End cover PT1,5	D-PT 1,5/S 3208142	Phoenix Contact
X10		=E1/002.8	End bracket	3022276	PHOENIX CONTACT
X10		=E1/002.8	End bracket	3022276	PHOENIX CONTACT
X10	1	=E1/510.3	Feed-through terminal block PT 1,5/S	3208100	PHOENIX CONTACT
X10	2	=E1/510.3	Feed-through terminal block PT 1,5/S	3208100	PHOENIX CONTACT
X10	3	=E1/510.4	Feed-through terminal block PT 1,5/S	3208100	PHOENIX CONTACT
X10	4	=E1/510.4	Feed-through terminal block PT 1,5/S	3208100	PHOENIX CONTACT
X10	5	=E1/510.5	Feed-through terminal block PT 1,5/S	3208100	PHOENIX CONTACT
X10	6	=E1/510.5	Feed-through terminal block PT 1,5/S	3208100	PHOENIX CONTACT
X10	7	=E1/510.6	Feed-through terminal block PT 1,5/S	3208100	PHOENIX CONTACT
X10	8	=E1/510.6	Feed-through terminal block PT 1,5/S	3208100	PHOENIX CONTACT
X10	9	=E1/511.3	Feed-through terminal block PT 1,5/S	3208100	PHOENIX CONTACT
X10	10	=E1/511.3	Feed-through terminal block PT 1,5/S	3208100	PHOENIX CONTACT
X10	11	=E1/511.4	Feed-through terminal block PT 1,5/S	3208100	PHOENIX CONTACT
X10	12	=E1/511.4	Feed-through terminal block PT 1,5/S	3208100	PHOENIX CONTACT
X10	13	=E1/511.5	Feed-through terminal block PT 1,5/S	3208100	PHOENIX CONTACT

Parts list

TEKNIKER_v5

DEVICE TAG		PLACEMENT	DESCRIPTION	REFERENCE	MANUFACTURER
X10	14	=E1/511.5	Feed-through terminal block PT 1,5/S	3208100	PHOENIX CONTACT
X10	15	=E1/511.6	Feed-through terminal block PT 1,5/S	3208100	PHOENIX CONTACT
X10	16	=E1/511.6	Feed-through terminal block PT 1,5/S	3208100	PHOENIX CONTACT
X10	17	=E1/512.3	Feed-through terminal block PT 1,5/S	3208100	PHOENIX CONTACT
X10	18	=E1/512.3	Feed-through terminal block PT 1,5/S	3208100	PHOENIX CONTACT
X10	19	=E1/512.4	Feed-through terminal block PT 1,5/S	3208100	PHOENIX CONTACT
X10	20	=E1/512.4	Feed-through terminal block PT 1,5/S	3208100	PHOENIX CONTACT
X10	21	=E1/512.5	Feed-through terminal block PT 1,5/S	3208100	PHOENIX CONTACT
X10	22	=E1/512.5	Feed-through terminal block PT 1,5/S	3208100	PHOENIX CONTACT
X10	23	=E1/512.6	Feed-through terminal block PT 1,5/S	3208100	PHOENIX CONTACT
X10	24	=E1/512.6	Feed-through terminal block PT 1,5/S	3208100	PHOENIX CONTACT
X10	25	=E1/513.3	Feed-through terminal block PT 1,5/S	3208100	PHOENIX CONTACT
X10	26	=E1/513.3	Feed-through terminal block PT 1,5/S	3208100	PHOENIX CONTACT
X10	27	=E1/513.4	Feed-through terminal block PT 1,5/S	3208100	PHOENIX CONTACT
X10	28	=E1/513.4	Feed-through terminal block PT 1,5/S	3208100	PHOENIX CONTACT
X10	29	=E1/520.1	Feed-through terminal block PT 1,5/S	3208100	PHOENIX CONTACT
X10	30	=E1/520.2	Feed-through terminal block PT 1,5/S	3208100	PHOENIX CONTACT
X10	31	=E1/520.5	Feed-through terminal block PT 1,5/S	3208100	PHOENIX CONTACT
X10	32	=E1/520.6	Feed-through terminal block PT 1,5/S	3208100	PHOENIX CONTACT
X10	33	=E1/521.1	Feed-through terminal block PT 1,5/S	3208100	PHOENIX CONTACT
X10	34	=E1/521.2	Feed-through terminal block PT 1,5/S	3208100	PHOENIX CONTACT
X10	35	=E1/521.5	Feed-through terminal block PT 1,5/S	3208100	PHOENIX CONTACT
X10	36	=E1/521.6	Feed-through terminal block PT 1,5/S	3208100	PHOENIX CONTACT
X10	37	=E1/522.1	Feed-through terminal block PT 1,5/S	3208100	PHOENIX CONTACT
X10	38	=E1/522.2	Feed-through terminal block PT 1,5/S	3208100	PHOENIX CONTACT
X10	39	=E1/522.5	Feed-through terminal block PT 1,5/S	3208100	PHOENIX CONTACT
X10	40	=E1/522.6	Feed-through terminal block PT 1,5/S	3208100	PHOENIX CONTACT
X10	41	=E1/523.1	Feed-through terminal block PT 1,5/S	3208100	PHOENIX CONTACT
X10	42	=E1/523.2	Feed-through terminal block PT 1,5/S	3208100	PHOENIX CONTACT
X10	43	=E1/523.5	Feed-through terminal block PT 1,5/S	3208100	PHOENIX CONTACT
X10	44	=E1/523.6	Feed-through terminal block PT 1,5/S	3208100	PHOENIX CONTACT
X10	44	=E1/523.6	End cover PT1,5	D-PT 1,5/S 3208142	PHOENIX CONTACT

Terminal diagram

F13_001_TK_V2

Strip

=E1+GIS-AcFiEa-CBT0101-X1

POWER IN

Function text	Cable name / Cable type	Target designation	Connection point	Terminal	Jumper	Wire	Target designation	Connection point	Cable name / Cable type	Page / column
		-002F1	1	1		L1	L1			/002.0
		-002F1	3	2		L2	L2			/002.1
		-002F1	5	3		L3	L3			/002.1

◁ 1000.c

2003 ▷

IK4 TEKNIKER Research Alliance
IK4-TEKNIKER
AVDA. OTAOLA 20
20600 Eibar (Gipuzkoa) Spain
Tfno.:(+34) 943 206744
Fax: (+34) 943 202757
Web: www.tekniker.es

Date	21/02/2018	2.0	29/08/2019	JOSE MANUEL				
Reviewed	F.LÓPEZ GARCIA	3.0	17/09/2019	JOSE MANUEL				
Drew by	JOSE MANUEL	Review	Date	Name	Review	Date	Name	

7186-GIS_LSST 7186
LSST Global Safety Interlock System Design

Replaces | Replaced by

Terminal diagram
=E1+GIS-AcFiEa-CBT0101-X1

Customer: EMPRESARIOS AGRUPADOS
C/Magallanes, 3
28015
3098000
http://www.empresariosagrupados.es/

= REPORT
+ GIS-AcFiEa-CBT0101

Terminal diagram

F13_001_TK_V2

Strip

=E1+GIS-AcFiEa-CBT0101-X2

DISTRIBUTION

Function text	Cable name / Cable type	Target designation	Connection point	Terminal	Jumper	Wire	Target designation	Connection point	Cable name / Cable type	Page / column
400V 50Hz		-020F1	1	1		L1.1	-002F1	2		/002.0
=				2		L1.1	-020F2	1		/020.5
=				3						/020.6
=		-020F1	3	4		L2.1	-002F1	4		/002.1
=				5		L2.1	-020F2	3		/020.5
=				6						/020.6
=		-020F1	5	7		L3.1	-002F1	6		/002.1
=				8		L3.1	-020F2	5		/020.5
=				9						/020.6
0V DISTRIBUTION				10		0V	0V			/028.2
=				11		0V				/028.5
24VDC I/Os		-500A1-X2	X2	12		+V2	-028F1	2.1		/028.3
=				13						/501.3
=				14						/501.4
=				15						/501.4
=		-500A1-X2	X2	16						/028.3
=				17						/501.3
=				18						/501.4
=				19						/501.4
24 VDC CONTROL		-220U1-X3	US1	20		+V1	+V			/028.4
=		-500A1-X1	X1	21		+V1	-220U1-X3	US2		/220.6
=				22						/501.1
=				23						/501.2
=		-220U1-X3	GND	24						/028.4
=		-500A1-X1	X1	25		0V1	-220U1-X3	GND		/220.6
=				26						/501.2
=				27						/501.2

IK4 TEKNIKER Research Alliance

IK4-TEKNIKER
AVDA. OTAOLA 20
20600 Eibar (Gipuzkoa) Spain
Tfno.:(+34) 943 206744
Fax: (+34) 943 202757
Web: www.tekniker.es

Date	21/02/2018	2.0	29/08/2019	JOSE MANUEL				
Reviewed	F.LÓPEZ GARCIA	3.0	17/09/2019	JOSE MANUEL				
Drew by	JOSE MANUEL	Review	Date	Name	Review	Date	Name	

7186-GIS_LSST 7186

LSST Global Safety Interlock System Design

Replaces | Replaced by

Terminal diagram
=E1+GIS-AcFiEa-CBT0101-X2

Customer: EMPRESARIOS AGRUPADOS
C/Magallanes, 3
28015
3098000
http://www.empresariosagrupados.es/

= REPORT
+ GIS-AcFiEa-CBT0101

Terminal diagram

F13_001_TK_V2

Strip

=E1+GIS-AcFiEa-CBT0101-X10

FIELD CONNECTIONS

Function text	Cable name / Cable type	Target designation	Connection point	Terminal	Jumper	Wire	Target designation	Connection point	Cable name / Cable type	Page / column
ACCES CONTROL SYSTEM EMERGENCY				1	.	510.01	-500A2	12		/510.3
=				2	.	E100.0	-500A2	11		/510.3
=				3	.	510.02	-500A2	13		/510.4
=				4	.	E100.1	-500A2	14		/510.4
SUMMIT FIRE CONTROL EMERGENCY				5	.	510.03	-500A2	22		/510.5
=				6	.	E100.2	-500A2	21		/510.5
=				7	.	510.04	-500A2	23		/510.6
=				8	.	E100.3	-500A2	24		/510.6
EARTHQUAKE CONTROL EMERGENCY				9	.	511.01	-500A3	12		/511.3
=				10	.	E101.0	-500A3	11		/511.3
=				11	.	511.02	-500A3	13		/511.4
=				12	.	E101.1	-500A3	14		/511.4
Unauthorized Pier Acces				13	.	511.03	-500A3	22		/511.5
=				14	.	E101.2	-500A3	21		/511.5
=				15	.	511.04	-500A3	23		/511.6
=				16	.	E101.3	-500A3	24		/511.6
Unauthorized Dome Acces				17	.	512.03	-500A4	12		/512.3
=				18	.	E102.0	-500A4	11		/512.3
=				19	.	512.04	-500A4	13		/512.4
=				20	.	E102.1	-500A4	14		/512.4
FIRE INTERLOCK				21	.	512.01	-500A4	22		/512.5
=		-500A4	21	22	.					/512.5
=				23	.	512.02	-500A4	23		/512.6
=		-500A4	24	24	.					/512.6
SAFE INPUT RESERVE				25	.	513.03	-500A5	12		/513.3
=				26	.	E103.0	-500A5	11		/513.3
=				27	.	513.04	-500A5	13		/513.4
=				28	.	E103.1	-500A5	14		/513.4
ACCES CONTROL SYSTEM EMERGENCY				29	.	520.01	-500A10	11		/520.1
=				30	.	A100.0	-500A10	12		/520.2
=				31	.	520.02	-500A10	31		/520.5
=				32	.	A100.1	-500A10	32		/520.6
SUMMIT FIRE CONTROL EMERGENCY				33	.	521.01	-500A11	11		/521.1
=				34	.	A101.0	-500A11	12		/521.2
=				35	.	521.02	-500A11	31		/521.5

IK4 TEKNIKER Research Alliance

IK4-TEKNIKER
AVDA. OTAOLA 20
20600 Eibar (Gipuzkoa) Spain
Tfno.:(+34) 943 206744
Fax: (+34) 943 202757
Web: www.tekniker.es

Date	21/02/2018	2.0	29/08/2019	JOSE MANUEL				
Reviewed	F.LÓPEZ GARCIA	3.0	17/09/2019	JOSE MANUEL				
Drew by	JOSE MANUEL	Review	Date	Name	Review	Date	Name	

7186-GIS_LSST 7186

LSST Global Safety Interlock System Design

Replaces | Replaced by

Terminal diagram
=E1+GIS-AcFiEa-CBT0101-X10

Customer: EMPRESARIOS AGRUPADOS
C/Magallanes, 3
28015
3098000
http://www.empresariosagrupados.es/

= REPORT
+ GIS-AcFiEa-CBT0101

Terminal diagram

F13_001_TK_V2

Strip

=E1+GIS-AcFiEa-CBT0101-X10

FIELD CONNECTIONS

Function text	Cable name	Cable type	Target designation	Connection point	Terminal	Jumper	Wire	Target designation	Connection point	Cable name	Cable type	Page / column
SUMMIT FIRE CONTROL EMERGENCY					36	.	A101.1	-500A11	32			/521.6
SAFE OUTPUT RESERVE					37	.	522.01	-500A12	11			/522.1
=					38	.	A102.0	-500A12	12			/522.2
=					39	.	522.02	-500A12	31			/522.5
=					40	.	A102.1	-500A12	32			/522.6
ACCES CONTROL SYSTEM EMERGENCY					41	.	523.01	-500A13	11			/523.1
=					42	.	A103.0	-500A13	12			/523.2
SUMMIT FIRE CONTROL EMERGENCY					43	.	523.02	-500A13	31			/523.5
=					44	.	A103.1	-500A13	32			/523.6

IK4 TEKNIKER Research Alliance

IK4-TEKNIKER
AVDA. OTAOLA 20
20600 Eibar (Gipuzkoa) Spain
Tfno.:(+34) 943 206744
Fax: (+34) 943 202757
Web: www.tekniker.es

Date	21/02/2018	2.0	29/08/2019	JOSE MANUEL				
Reviewed	F.LÓPEZ GARCIA	3.0	17/09/2019	JOSE MANUEL				
Drew by	JOSE MANUEL	Review	Date	Name	Review	Date	Name	

7186-GIS_LSST 7186

LSST Global Safety Interlock System Design

Replaces | Replaced by

Terminal diagram
=E1+GIS-AcFiEa-CBT0101-X10

Customer: EMPRESARIOS AGRUPADOS
C/Magallanes, 3
28015
3098000
http://www.empresariosagrupados.es/

= REPORT
+ GIS-AcFiEa-CBT0101

Cable overview

F10_003 - TK

Cable designation	from	to	Cable type	Condctrs	ø	Length	Function text
=E1-220W1	=E1-220U1-X1	=E1-500A1	YE ETH CAT6	5	1	1,5	SafetyNet-GIS_FIRE YELOW

IK4 TEKNIKER Research Alliance

IK4-TEKNIKER
AVDA. OTAOLA 20
20600 Eibar (Gipuzkoa) Spain
Tfno.:(+34) 943 206744
Fax: (+34) 943 202757
Web: www.tekniker.es

Date	21/02/2018	2.0	29/08/2019	JOSE MANUEL			
Reviewed	F.LÓPEZ GARCIA	3.0	17/09/2019	JOSE MANUEL			
Drew by	JOSE MANUEL	Review	Date	Name	Review	Date	Name

7186-GIS_LSST 7186

LSST Global Safety Interlock System Design

Replaces | Replaced by

Cable overview :
=E1+GIS-AcFiEa-CBT0101-220W1 -
=E1+GIS-AcFiEa-CBT0101-220W1

Customer:
EMPRESARIOS AGRUPADOS
C/Magallanes, 3
28015
3098000
http://www.empresariosagrupados.es/

= REPORT

+ GIS-AcFiEa-CBT0101

Cable diagram

F09_001_TK

Identificador de cable	Referencia Cable	no. of conductors	cross-section	cable length	function text
=E1+GIS-AcFiEa-CBT0101-220W1	YE ETH CAT6	5	1	1,5	SafetyNet-GIS_FIRE YELOW

function text	X-Ref	ORIGEN	Pin Origen	conductor	Etiqueta Hilo	DESTINO	Pin Destino	X-Ref	function text
	/220.5	-220U1-X1		**ETH**		-500A1	-X3	/502.2	

IK4 TEKNIKER Research Alliance

IK4-TEKNIKER
AVDA. OTAOLA 20
20600 Eibar (Gipuzkoa) Spain
Tfno.:(+34) 943 206744
Fax: (+34) 943 202757
Web: www.tekniker.es

Date	21/02/2018	2.0	29/08/2019	JOSE MANUEL				
Reviewed	F.LÓPEZ GARCIA	3.0	17/09/2019	JOSE MANUEL				
Drew by	JOSE MANUEL	Review	Date	Name	Review	Date	Name	

7186-GIS_LSST 7186

LSST Global Safety Interlock System Design

Replaces | Replaced by

Cable diagram
=E1+GIS-AcFiEa-CBT0101-220W1

Customer:

EMPRESARIOS AGRUPADOS
C/Magallanes, 3
28015
3098000

http://www.empresariosagrupados.es/

= REPORT
+ GIS-AcFiEa-CBT0101

Customer

EMPRESARIOS AGRUPADOS

EMPRESARIOS AGRUPADOS
C/Magallanes, 3
28015
ESPAÑA
3098000

http://www.empresariosagrupados.es/

Project:

7186-GIS_LSST
7186
LSST Global Safety Interlock System Design

REPORT
REPORT

GIS-LASER-CBT0101
GIS LASER CONTROLER CABINET

Number of pages: 178

Made by:

IK4-TEKNIKER
AVDA. OTAOLA 20
20600 Eibar (Gipuzkoa) Spain
Tfno. : (+34) 943 206744
Fax : (+34) 943 202757
Web: www.tekniker.es

2.0	CHILE ASEMBLY	29/08/2019	JOSE MANUEL
3.0	CHILE ASEMBLY (Specific cabinets for M2CAM & PfAux)	17/09/2019	JOSE MANUEL
Review	Review description	Date	Reviewed

Drew by: J.M.CASTAÑO
Reviewed: F.LÓPEZ GARCIA
Date: 04/05/2017
Replaces:
Replaced by:

Parts list

TEKNIKER_v5

DEVICE TAG	PLACEMENT	DESCRIPTION	REFERENCE	MANUFACTURER
500A1	=E1/500.3	PSSu head module	PSSu H FS SN SDT 314 085	PILZ
500A1	=E1/500.3	TERMINALS	PSSu A Con 2/8 C 313 111	PILZ
500A2	=E1/500.4	Safety digital input module	PSSu E F 4DI-T 314 200	PILZ
500A2	=E1/500.4	Base module Cage clamp terminal	PSSu BP 1/8 C-T 314 601	PILZ
500A3	=E1/500.5	Safety digital input module	PSSu E F 4DI-T 314 200	PILZ
500A3	=E1/500.5	Base module Cage clamp terminal	PSSu BP 1/8 C-T 314 601	PILZ
500A10	=E1/500.5	Safety digital output module	PSSu E F 2DOR 8-T 314 225	PILZ
500A10	=E1/500.5	Base module Cage clamp terminal	PSSu BP 2/16 C-T 314 629	PILZ
500A11	=E1/500.5	Safety digital output module	PSSu E F 2DOR 8-T 314 225	PILZ
500A11	=E1/500.5	Base module Cage clamp terminal	PSSu BP 2/16 C-T 314 629	PILZ
500A12	=E1/500.6	Safety digital output module	PSSu E F 2DOR 8-T 314 225	PILZ
500A12	=E1/500.6	Base module Cage clamp terminal	PSSu BP 2/16 C-T 314 629	PILZ
002F1	=E1/002.0	Miniature Circuit Breaker C 6A	A9F79306	SCHNEIDER ELECTRIC
020F1	=E1/020.1	Miniature Circuit Breaker C 6A	A9F79306	SCHNEIDER ELECTRIC
020F2	=E1/020.4	Miniature Circuit Breaker C 6A	A9F79306	SCHNEIDER ELECTRIC
028F1	=E1/028.2	Base element	2800929	PHOENIX CONTACT
028F1	=E1/028.2	Plug-in bridge	3030255	PHOENIX CONTACT
028F1	=E1/028.2	Plug-in bridge	3036958	PHOENIX CONTACT
028F1-F1	=E1/028.2	Thermomagnetic device circuit breaker	2800850	PHOENIX CONTACT
020G1	=E1/020.0	Power supply unit	2904620	PHOENIX CONTACT
020G2	=E1/020.4	Power supply unit	2904620	PHOENIX CONTACT
020G3	=E1/020.7	Redundancy module, with protective coating	2320173	PHOENIX CONTACT
PE	=E1/002.7	earth busbar	550220 TCB 20x5	ERICO
PE	(GIS-LASER.S4)	earth busbar	550220 TCB 20x5	ERICO
002SH1 1	=E1/002.7	Connection terminal block	0404017	PHOENIX CONTACT
002SH1 1	=E1/002.7	Support bracket	0404428	PHOENIX CONTACT
002SH1 1	=E1/002.7	Support bracket	0404428	PHOENIX CONTACT
002SH1 1	=E1/002.7	Neutral busbar	0402174	PHOENIX CONTACT
002SH1 1	(GIS-LASER.S4)	Support bracket	0404428	PHOENIX CONTACT
002SH1 1	(GIS-LASER.S4)	Support bracket	0404428	PHOENIX CONTACT
002SH1 1	(GIS-LASER.S4)	Neutral busbar	0402174	PHOENIX CONTACT
U1	(GIS-LASER.S4)	NSYS3D6G8630P	NSYS3D6G8630P	SCHNEIDER ELECTRIC
U10	(GIS-LASER.S4)	Unex slotted trunking 80x43 in U23X	80.40.77	UNEX
U11	(GIS-LASER.S4)	Unex slotted trunking 80x43 in U23X	80.40.77	UNEX
U14	(GIS-LASER.S4)	Unex slotted trunking 80x43 in U23X	80.40.77	UNEX
U15	(GIS-LASER.S4)	Unex slotted trunking 80x43 in U23X	80.40.77	UNEX
U100	(GIS-LASER.S4)	Mounting rail EN 50 022 (35x15)	TS 35_15	...
U101	(GIS-LASER.S4)	Mounting rail EN 50 022 (35x15)	TS 35_15	...
U102	(GIS-LASER.S4)	Mounting rail EN 50 022 (35x15)	TS 35_15	...

Parts list

TEKNIKER_v5

DEVICE TAG		PLACEMENT	DESCRIPTION	REFERENCE	MANUFACTURER
U103		(GIS-LASER.S4)	Unex slotted trunking 80x60 in U23X	80.60.77	UNEX
U104		(GIS-LASER.S4)	Unex slotted trunking 80x60 in U23X	80.60.77	UNEX
U105		(GIS-LASER.S4)	Unex slotted trunking 80x60 in U23X	80.60.77	UNEX
U106		(GIS-LASER.S4)	Unex slotted trunking 80x60 in U23X	80.60.77	UNEX
220U1		=E1/220.2	FO converters	2891315	PHOENIX CONTACT
220W1		=E1/220.5	YELOW ETH CABLE	BLB.C6PC70S-YE-5	BLACK BOX
X1		=E1/002.8	End bracket	3022276	PHOENIX CONTACT
X1		=E1/002.8	End bracket	3022276	PHOENIX CONTACT
X1	1	=E1/002.0	Feed-through terminal block "Push-in" PT 2,5	3209510	PHOENIX CONTACT
X1	2	=E1/002.1	Feed-through terminal block "Push-in" PT 2,5	3209510	PHOENIX CONTACT
X1	3	=E1/002.1	Feed-through terminal block "Push-in" PT 2,5	3209510	PHOENIX CONTACT
X1	3	=E1/002.1	End cover ST-PT 2,5	3030417	PHOENIX CONTACT
X2		=E1/002.8	End bracket	3022276	PHOENIX CONTACT
X2		=E1/002.8	End bracket	3022276	PHOENIX CONTACT
X2	1	=E1/002.0	Feed-through terminal block "Push-in" PT 2,5	3209510	PHOENIX CONTACT
X2	1	=E1/002.0	3 ST2,5 busbar	3030174	PHOENIX CONTACT
X2	2	=E1/020.5	Feed-through terminal block "Push-in" PT 2,5	3209510	PHOENIX CONTACT
X2	3	=E1/020.6	Feed-through terminal block "Push-in" PT 2,5	3209510	PHOENIX CONTACT
X2	4	=E1/002.1	Feed-through terminal block "Push-in" PT 2,5	3209510	PHOENIX CONTACT
X2	4	=E1/002.1	3 ST2,5 busbar	3030174	PHOENIX CONTACT
X2	5	=E1/020.5	Feed-through terminal block "Push-in" PT 2,5	3209510	PHOENIX CONTACT
X2	6	=E1/020.6	Feed-through terminal block "Push-in" PT 2,5	3209510	PHOENIX CONTACT
X2	7	=E1/002.1	Feed-through terminal block "Push-in" PT 2,5	3209510	PHOENIX CONTACT
X2	7	=E1/002.1	3 ST2,5 busbar	3030174	PHOENIX CONTACT
X2	8	=E1/020.5	Feed-through terminal block "Push-in" PT 2,5	3209510	PHOENIX CONTACT
X2	9	=E1/020.6	Feed-through terminal block "Push-in" PT 2,5	3209510	PHOENIX CONTACT
X2	9	=E1/020.6	End cover ST-PT 2,5	3030417	PHOENIX CONTACT
X2	10	=E1/028.2	Feed-through terminal block "Push-in" PT 2,5	3209510	PHOENIX CONTACT
X2	10	=E1/028.2	2 ST2,5 busbar	3030161	PHOENIX CONTACT
X2	11	=E1/028.5	Feed-through terminal block "Push-in" PT 2,5	3209510	PHOENIX CONTACT
X2	11	=E1/028.5	End cover ST-PT 2,5	3030417	PHOENIX CONTACT
X2	12	=E1/028.3	Feed-through terminal block "Push-in" PT 2,5	3209510	PHOENIX CONTACT
X2	12	=E1/028.3	2,5/4-1,5/S reduction busbar	3214356	PHOENIX CONTACT
X2	13	=E1/501.3	Feed-through terminal block PT 1,5/S	3208100	PHOENIX CONTACT
X2	13	=E1/501.3	3 pt-1,5 busbar	3213027	PHOENIX CONTACT
X2	14	=E1/501.4	Feed-through terminal block PT 1,5/S	3208100	PHOENIX CONTACT
X2	15	=E1/501.4	Feed-through terminal block PT 1,5/S	3208100	PHOENIX CONTACT
X2	15	=E1/501.4	End cover PT1,5	D-PT 1,5/S 3208142	PHOENIX CONTACT
X2	16	=E1/028.3	Feed-through terminal block "Push-in" PT 2,5	3209510	PHOENIX CONTACT

Parts list

TEKNIKER_v5

DEVICE TAG		PLACEMENT	DESCRIPTION	REFERENCE	MANUFACTURER
X2	16	=E1/028.3	2,5/4-1,5/S reduction busbar	3214356	PHOENIX CONTACT
X2	17	=E1/501.3	Feed-through terminal block PT 1,5/S	3208100	PHOENIX CONTACT
X2	17	=E1/501.3	3 pt-1,5 busbar	3213027	PHOENIX CONTACT
X2	18	=E1/501.4	Feed-through terminal block PT 1,5/S	3208100	PHOENIX CONTACT
X2	19	=E1/501.4	Feed-through terminal block PT 1,5/S	3208100	PHOENIX CONTACT
X2	19	=E1/501.4	End cover PT1,5	D-PT 1,5/S 3208142	PHOENIX CONTACT
X2	20	=E1/028.4	Feed-through terminal block "Push-in" PT 2,5	3209510	PHOENIX CONTACT
X2	20	=E1/028.4	2,5/4-1,5/S reduction busbar	3214356	PHOENIX CONTACT
X2	21	=E1/220.6	Feed-through terminal block PT 1,5/S	3208100	PHOENIX CONTACT
X2	21	=E1/220.6	3 pt-1,5 busbar	3213027	PHOENIX CONTACT
X2	22	=E1/501.1	Feed-through terminal block PT 1,5/S	3208100	PHOENIX CONTACT
X2	23	=E1/501.2	Feed-through terminal block PT 1,5/S	3208100	PHOENIX CONTACT
X2	23	=E1/501.2	End cover PT1,5	D-PT 1,5/S 3208142	PHOENIX CONTACT
X2	24	=E1/028.4	Feed-through terminal block "Push-in" PT 2,5	3209510	PHOENIX CONTACT
X2	24	=E1/028.4	2,5/4-1,5/S reduction busbar	3214356	PHOENIX CONTACT
X2	25	=E1/220.6	Feed-through terminal block PT 1,5/S	3208100	PHOENIX CONTACT
X2	25	=E1/220.6	3 pt-1,5 busbar	3213027	PHOENIX CONTACT
X2	26	=E1/501.2	Feed-through terminal block PT 1,5/S	3208100	PHOENIX CONTACT
X2	27	=E1/501.2	Feed-through terminal block PT 1,5/S	3208100	PHOENIX CONTACT
X2	27	=E1/501.2	End cover PT1,5	D-PT 1,5/S 3208142	PHOENIX CONTACT
X10		=E1/002.8	End bracket	3022276	PHOENIX CONTACT
X10		=E1/002.8	End bracket	3022276	PHOENIX CONTACT
X10	1	=E1/510.3	Feed-through terminal block PT 1,5/S	3208100	PHOENIX CONTACT
X10	2	=E1/510.3	Feed-through terminal block PT 1,5/S	3208100	PHOENIX CONTACT
X10	3	=E1/510.4	Feed-through terminal block PT 1,5/S	3208100	PHOENIX CONTACT
X10	4	=E1/510.4	Feed-through terminal block PT 1,5/S	3208100	PHOENIX CONTACT
X10	5	=E1/510.5	Feed-through terminal block PT 1,5/S	3208100	PHOENIX CONTACT
X10	6	=E1/510.5	Feed-through terminal block PT 1,5/S	3208100	PHOENIX CONTACT
X10	7	=E1/510.6	Feed-through terminal block PT 1,5/S	3208100	PHOENIX CONTACT
X10	8	=E1/510.6	Feed-through terminal block PT 1,5/S	3208100	PHOENIX CONTACT
X10	9	=E1/511.3	Feed-through terminal block PT 1,5/S	3208100	PHOENIX CONTACT
X10	10	=E1/511.3	Feed-through terminal block PT 1,5/S	3208100	PHOENIX CONTACT
X10	11	=E1/511.4	Feed-through terminal block PT 1,5/S	3208100	PHOENIX CONTACT
X10	12	=E1/511.4	Feed-through terminal block PT 1,5/S	3208100	PHOENIX CONTACT
X10	13	=E1/520.1	Feed-through terminal block PT 1,5/S	3208100	PHOENIX CONTACT
X10	14	=E1/520.2	Feed-through terminal block PT 1,5/S	3208100	PHOENIX CONTACT
X10	15	=E1/520.5	Feed-through terminal block PT 1,5/S	3208100	PHOENIX CONTACT
X10	16	=E1/520.6	Feed-through terminal block PT 1,5/S	3208100	PHOENIX CONTACT
X10	17	=E1/521.1	Feed-through terminal block PT 1,5/S	3208100	PHOENIX CONTACT

IK4 TEKNIKER Research Alliance

IK4-TEKNIKER
AVDA. OTAOLA 20
20600 Eibar (Gipuzkoa) Spain
Tfno.:(+34) 943 206744
Fax: (+34) 943 202757
Web: www.tekniker.es

Date	30/08/2022	2.0	29/08/2019	JOSE MANUEL			
Reviewed	F.LÓPEZ GARCIA	3.0	17/09/2019	JOSE MANUEL			
Drew by	JOSE MANUEL	Review	Date	Name	Review	Date	Name

7186-GIS_LSST 7186
LSST Global Safety Interlock System Design

Replaces | Replaced by

Parts list : PXC.3214356 - PXC.3208100

Customer: EMPRESARIOS AGRUPADOS
C/Magallanes, 3
28015
3098000
http://www.empresariosagrupados.es/

= REPORT
+ GIS-LASER-CBT0101

Parts list

TEKNIKER_v5

DEVICE TAG	PLACEMENT	DESCRIPTION	REFERENCE	MANUFACTURER
X10 18	=E1/521.2	Feed-through terminal block PT 1,5/S	3208100	PHOENIX CONTACT
X10 19	=E1/521.5	Feed-through terminal block PT 1,5/S	3208100	PHOENIX CONTACT
X10 20	=E1/521.6	Feed-through terminal block PT 1,5/S	3208100	PHOENIX CONTACT
X10 21	=E1/522.1	Feed-through terminal block PT 1,5/S	3208100	PHOENIX CONTACT
X10 22	=E1/522.2	Feed-through terminal block PT 1,5/S	3208100	PHOENIX CONTACT
X10 23	=E1/522.5	Feed-through terminal block PT 1,5/S	3208100	PHOENIX CONTACT
X10 24	=E1/522.6	Feed-through terminal block PT 1,5/S	3208100	PHOENIX CONTACT
X10 24	=E1/522.6	End cover PT1,5	D-PT 1,5/S 3208142	PHOENIX CONTACT

Terminal diagram

F13_001_TK_V2

Strip

=E1+GIS-LASER-CBT0101-X1

POWER IN

Function text	Cable name	Cable type	Target designation	Connection point	Terminal	Jumper	Wire	Target designation	Connection point	Cable name	Cable type	Page / column
			-002F1	1	1		L1	L1				/002.0
			-002F1	3	2		L2	L2				/002.1
			-002F1	5	3		L3	L3				/002.1

◁ 1000.c

2003 ▷

IK4 TEKNIKER Research Alliance
IK4-TEKNIKER
AVDA. OTAOLA 20
20600 Eibar (Gipuzkoa) Spain
Tfno.:(+34) 943 206744
Fax: (+34) 943 202757
Web: www.tekniker.es

Date	21/02/2018	2.0	29/08/2019	JOSE MANUEL				
Reviewed	F.LÓPEZ GARCIA	3.0	17/09/2019	JOSE MANUEL				
Drew by	JOSE MANUEL	Review	Date	Name	Review	Date	Name	

7186-GIS_LSST 7186
LSST Global Safety Interlock System Design

Replaces | Replaced by

Terminal diagram
=E1+GIS-LASER-CBT0101-X1

Customer: EMPRESARIOS AGRUPADOS
C/Magallanes, 3
28015
3098000
http://www.empresariosagrupados.es/

= REPORT
+ GIS-LASER-CBT0101

Terminal diagram

F13_001_TK_V2

Strip

=E1+GIS-LASER-CBT0101-X2

DISTRIBUTION

Function text	Cable name / Cable type	Target designation	Connection point	Terminal	Jumper	Wire	Target designation	Connection point	Cable name / Cable type	Page / column
400V 50Hz		-020F1	1	1		L1.1	-002F1	2		/002.0
=				2		L1.1	-020F2	1		/020.5
=				3						/020.6
=		-020F1	3	4		L2.1	-002F1	4		/002.1
=				5		L2.1	-020F2	3		/020.5
=				6						/020.6
=		-020F1	5	7		L3.1	-002F1	6		/002.1
=				8		L3.1	-020F2	5		/020.5
=				9						/020.6
0V DISTRIBUTION				10		0V	0V			/028.2
=				11		0V				/028.5
24VDC I/Os		-500A1-X2	X2	12		+V2	-028F1	2.1		/028.3
=				13						/501.3
=				14						/501.4
=				15						/501.4
=		-500A1-X2	X2	16		0V2				/028.3
=				17						/501.3
=				18						/501.4
=				19						/501.4
24 VDC CONTROL		-220U1-X3	US1	20		+V1	+V			/028.4
=		-500A1-X1	X1	21		+V1	-220U1-X3	US2		/220.6
=				22						/501.1
=				23						/501.2
=		-220U1-X3	GND	24		0V1				/028.4
=		-500A1-X1	X1	25		0V1	-220U1-X3	GND		/220.6
=				26						/501.2
=				27						/501.2

IK4 TEKNIKER Research Alliance

IK4-TEKNIKER
AVDA. OTAOLA 20
20600 Eibar (Gipuzkoa) Spain
Tfno.:(+34) 943 206744
Fax: (+34) 943 202757
Web: www.tekniker.es

Date	21/02/2018	2.0	29/08/2019	JOSE MANUEL				
Reviewed	F.LÓPEZ GARCIA	3.0	17/09/2019	JOSE MANUEL				
Drew by	JOSE MANUEL	Review	Date	Name	Review	Date	Name	

7186-GIS_LSST 7186

LSST Global Safety Interlock System Design

Replaces | Replaced by

Terminal diagram
=E1+GIS-LASER-CBT0101-X2

Customer: EMPRESARIOS AGRUPADOS
C/Magallanes, 3
28015
3098000
http://www.empresariosagrupados.es/

= REPORT
+ GIS-LASER-CBT0101

Terminal diagram

F13_001_TK_V2

Strip

=E1+GIS-LASER-CBT0101-X10

FIELD CONNECTIONS

Function text	Cable name / Cable type	Target designation	Connection point	Terminal	Jumper	Wire	Target designation	Connection point	Cable name / Cable type	Page / column
LASER EMERGENCY				1	.	510.01	-500A2	12		/510.3
=				2	.	E200.0	-500A2	11		/510.3
=				3	.	510.02	-500A2	13		/510.4
=				4	.	E200.1	-500A2	14		/510.4
SAFE INPUT RESERVE				5	.	510.03	-500A2	22		/510.5
=				6	.	E200.2	-500A2	21		/510.5
=				7	.	510.04	-500A2	23		/510.6
=				8	.	E200.3	-500A2	24		/510.6
=				9	.	511.03	-500A3	12		/511.3
=				10	.	E201.0	-500A3	11		/511.3
=				11	.	511.04	-500A3	13		/511.4
=				12	.	E201.1	-500A3	14		/511.4
LASER EMERGENCY				13	.	520.01	-500A10	11		/520.1
=				14	.	A200.0	-500A10	12		/520.2
=				15	.	520.02	-500A10	31		/520.5
=				16	.	A200.1	-500A10	32		/520.6
SAFE OUTPUT RESERVE				17	.	521.01	-500A11	11		/521.1
=				18	.	A201.0	-500A11	12		/521.2
=				19	.	521.02	-500A11	31		/521.5
=				20	.	A201.1	-500A11	32		/521.6
LASER EMERGENCY				21	.	522.01	-500A12	11		/522.1
=				22	.	A202.0	-500A12	12		/522.2
SAFE OUTPUT RESERVE				23	.	522.02	-500A12	31		/522.5
=				24	.	A202.1	-500A12	32		/522.6

Cable overview

F10_003 - TK

Cable designation	from	to	Cable type	Condctrs	ø	Length	Function text
=E1-220W1	=E1-220U1-X1	=E1-500A1	YE ETH CAT6	5	1	1,5	SafetyNet-GIS_LASER YELOW

IK4 TEKNIKER Research Alliance

IK4-TEKNIKER
AVDA. OTAOLA 20
20600 Eibar (Gipuzkoa) Spain
Tfno.:(+34) 943 206744
Fax: (+34) 943 202757
Web: www.tekniker.es

Date	21/02/2018	2.0	29/08/2019	JOSE MANUEL			
Reviewed	F.LÓPEZ GARCIA	3.0	17/09/2019	JOSE MANUEL			
Drew by	JOSE MANUEL	Review	Date	Name	Review	Date	Name

7186-GIS_LSST 7186

LSST Global Safety Interlock System Design

Replaces | Replaced by

Cable overview :
=E1+GIS-LASER-CBT0101-220W1 -
=E1+GIS-LASER-CBT0101-220W1

Customer:

EMPRESARIOS AGRUPADOS
C/Magallanes, 3
28015
3098000

http://www.empresariosagrupados.es/

= REPORT
+ GIS-LASER-CBT0101

Cable diagram

F09_001_TK

Identificador de cable	Referencia Cable	no. of conductors	cross-section	cable length	function text
=E1+GIS-LASER-CBT0101-220W1	YE ETH CAT6	5	1	1,5	SafetyNet-GIS_LASER YELOW

function text	X-Ref	ORIGEN	Pin Origen	conductor	Etiqueta Hilo	DESTINO	Pin Destino	X-Ref	function text
	/220.5	-220U1-X1		**ETH**		-500A1	-X3	/502.2	

IK4 TEKNIKER Research Alliance

IK4-TEKNIKER
AVDA. OTAOLA 20
20600 Eibar (Gipuzkoa) Spain
Tfno.:(+34) 943 206744
Fax: (+34) 943 202757
Web: www.tekniker.es

Date	21/02/2018	2.0	29/08/2019	JOSE MANUEL			
Reviewed	F.LÓPEZ GARCIA	3.0	17/09/2019	JOSE MANUEL			
Drew by	JOSE MANUEL	Review	Date	Name	Review	Date	Name

7186-GIS_LSST 7186

LSST Global Safety Interlock System Design

Replaces | Replaced by

Cable diagram
=E1+GIS-LASER-CBT0101-220W1

Customer:

EMPRESARIOS AGRUPADOS
C/Magallanes, 3
28015
3098000

http://www.empresariosagrupados.es/

= REPORT
+ GIS-LASER-CBT0101

Customer

EMPRESARIOS AGRUPADOS

EMPRESARIOS AGRUPADOS
C/Magallanes, 3
28015
ESPAÑA
3098000

http://www.empresariosagrupados.es/

Project:

7186-GIS_LSST
7186
LSST Global Safety Interlock System Design

REPORT
REPORT

GIS-M2CAM-CBT0101
GIS M2 CAMERA CABINET

Number of pages: 178

Made by:

IK4-TEKNIKER
AVDA. OTAOLA 20
20600 Eibar (Gipuzkoa) Spain
Tfno. : (+34) 943 206744
Fax : (+34) 943 202757
Web: www.tekniker.es

Review	Review description	Date	Reviewed
2.0	CHILE ASEMBLY	29/08/2019	JOSE MANUEL
3.0	CHILE ASEMBLY (Specific cabinets for M2CAM & PfAux)	17/09/2019	JOSE MANUEL

Drew by:	J.M.CASTAÑO
Reviewed:	F.LÓPEZ GARCIA
Date:	04/05/2017
Replaces:	
Replaced by:	

Parts list

TEKNIKER_v5

DEVICE TAG	PLACEMENT	DESCRIPTION	REFERENCE	MANUFACTURER
500A1	=E1/500.3	PSSu head module	PSSu H FS SN SDT 314 085	PILZ
500A1	=E1/500.3	TERMINALS	PSSu A Con 2/8 C 313 111	PILZ
500A2	=E1/500.4	Safety digital input module	PSSu E F 4DI-T 314 200	PILZ
500A2	=E1/500.4	Base module Cage clamp terminal	PSSu BP 1/8 C-T 314 601	PILZ
500A3	=E1/500.5	Safety digital input module	PSSu E F 4DI-T 314 200	PILZ
500A3	=E1/500.5	Base module Cage clamp terminal	PSSu BP 1/8 C-T 314 601	PILZ
500A4	=E1/500.5	Safety digital input module	PSSu E F 4DI-T 314 200	PILZ
500A4	=E1/500.5	Base module Cage clamp terminal	PSSu BP 1/8 C-T 314 601	PILZ
500A10	=E1/500.5	Safety digital output module	PSSu E F 2DOR 8-T 314 225	PILZ
500A10	=E1/500.5	Base module Cage clamp terminal	PSSu BP 2/16 C-T 314 629	PILZ
500A11	=E1/500.5	Safety digital output module	PSSu E F 2DOR 8-T 314 225	PILZ
500A11	=E1/500.5	Base module Cage clamp terminal	PSSu BP 2/16 C-T 314 629	PILZ
500A12	=E1/500.6	Safety digital output module	PSSu E F 2DOR 8-T 314 225	PILZ
500A12	=E1/500.6	Base module Cage clamp terminal	PSSu BP 2/16 C-T 314 629	PILZ
500A13	=E1/500.6	Safety digital output module	PSSu E F 2DOR 8-T 314 225	PILZ
500A13	=E1/500.6	Base module Cage clamp terminal	PSSu BP 2/16 C-T 314 629	PILZ
500A14	=E1/500.6	Safety digital output module	PSSu E F 2DOR 8-T 314 225	PILZ
500A14	=E1/500.6	Base module Cage clamp terminal	PSSu BP 2/16 C-T 314 629	PILZ
500A15	=E1/500.7	Safety digital output module	PSSu E F 2DOR 8-T 314 225	PILZ
500A15	=E1/500.7	Base module Cage clamp terminal	PSSu BP 2/16 C-T 314 629	PILZ
500A16	=E1/500.7	Safety digital output module	PSSu E F 2DOR 8-T 314 225	PILZ
500A16	=E1/500.7	Base module Cage clamp terminal	PSSu BP 2/16 C-T 314 629	PILZ
002F1	=E1/002.0	Miniature Circuit Breaker C 6A	A9F79306	SCHNEIDER ELECTRIC
020F1	=E1/020.1	Miniature Circuit Breaker C 6A	A9F79306	SCHNEIDER ELECTRIC
020F2	=E1/020.4	Miniature Circuit Breaker C 6A	A9F79306	SCHNEIDER ELECTRIC
028F1	=E1/028.2	Base element	2800929	PHOENIX CONTACT
028F1	=E1/028.2	Plug-in bridge	3030255	PHOENIX CONTACT
028F1	=E1/028.2	Plug-in bridge	3036958	PHOENIX CONTACT
028F1-F1	=E1/028.2	Thermomagnetic device circuit breaker	2800850	PHOENIX CONTACT
020G1	=E1/020.0	Power supply unit	2904620	PHOENIX CONTACT
020G2	=E1/020.4	Power supply unit	2904620	PHOENIX CONTACT
020G3	=E1/020.7	Redundancy module, with protective coating	2320173	PHOENIX CONTACT
PE	=E1/002.7	earth busbar	550220 TCB 20x5	ERICO
002SH1 1	=E1/002.7	Connection terminal block	0404017	PHOENIX CONTACT
002SH1 1	=E1/002.7	Support bracket	0404428	PHOENIX CONTACT
002SH1 1	=E1/002.7	Support bracket	0404428	PHOENIX CONTACT
002SH1 1	=E1/002.7	Neutral busbar	0402174	PHOENIX CONTACT
U1	=E1 (GIS-M2CAM.S5)	AE Compact enclosure, WHD: 500x700x250 mm, Sheet steel, with mounting plate	1057500	RIT
U2	=E1 (GIS-M2CAM.S5)	Unex slotted trunking 80x60 in U23X	80.60.77	UNEX

Parts list

TEKNIKER_v5

DEVICE TAG		PLACEMENT	DESCRIPTION	REFERENCE	MANUFACTURER
U3		=E1 (GIS-M2CAM.S5)	Unex slotted trunking 80x60 in U23X	80.60.77	UNEX
U4		=E1 (GIS-M2CAM.S5)	Unex slotted trunking 80x60 in U23X	80.60.77	UNEX
U5		=E1 (GIS-M2CAM.S5)	Mounting rail EN 50 022 (35x15)	TS 35_15	...
220U1		=E1/220.2	FO converters	2891315	PHOENIX CONTACT
220W1		=E1/220.5	YELOW ETH CABLE	BLB.C6PC70S-YE-5	BLACK BOX
X1		=E1/002.8	End bracket	3022276	PHOENIX CONTACT
X1		=E1/002.8	End bracket	3022276	PHOENIX CONTACT
X1	1	=E1/002.0	Feed-through terminal block "Push-in" PT 2,5	3209510	PHOENIX CONTACT
X1	2	=E1/002.1	Feed-through terminal block "Push-in" PT 2,5	3209510	PHOENIX CONTACT
X1	3	=E1/002.1	Feed-through terminal block "Push-in" PT 2,5	3209510	PHOENIX CONTACT
X1	3	=E1/002.1	End cover ST-PT 2,5	3030417	Phoenix Contact
X2		=E1/002.8	End bracket	3022276	PHOENIX CONTACT
X2		=E1/002.8	End bracket	3022276	PHOENIX CONTACT
X2	1	=E1/002.0	Feed-through terminal block "Push-in" PT 2,5	3209510	PHOENIX CONTACT
X2	1	=E1/002.0	3 ST2,5 busbar	3030174	PHOENIX CONTACT
X2	2	=E1/020.7	Feed-through terminal block "Push-in" PT 2,5	3209510	PHOENIX CONTACT
X2	3	=E1/020.8	Feed-through terminal block "Push-in" PT 2,5	3209510	PHOENIX CONTACT
X2	4	=E1/002.1	Feed-through terminal block "Push-in" PT 2,5	3209510	PHOENIX CONTACT
X2	4	=E1/002.1	3 ST2,5 busbar	3030174	PHOENIX CONTACT
X2	5	=E1/020.7	Feed-through terminal block "Push-in" PT 2,5	3209510	PHOENIX CONTACT
X2	6	=E1/020.8	Feed-through terminal block "Push-in" PT 2,5	3209510	PHOENIX CONTACT
X2	7	=E1/002.1	Feed-through terminal block "Push-in" PT 2,5	3209510	PHOENIX CONTACT
X2	7	=E1/002.1	3 ST2,5 busbar	3030174	PHOENIX CONTACT
X2	8	=E1/020.7	Feed-through terminal block "Push-in" PT 2,5	3209510	PHOENIX CONTACT
X2	9	=E1/020.8	Feed-through terminal block "Push-in" PT 2,5	3209510	PHOENIX CONTACT
X2	9	=E1/020.8	End cover ST-PT 2,5	3030417	PHOENIX CONTACT
X2	10	=E1/028.2	Feed-through terminal block "Push-in" PT 2,5	3209510	PHOENIX CONTACT
X2	10	=E1/028.2	2 ST2,5 busbar	3030161	PHOENIX CONTACT
X2	11	=E1/028.5	Feed-through terminal block "Push-in" PT 2,5	3209510	PHOENIX CONTACT
X2	11	=E1/028.5	End cover ST-PT 2,5	3030417	PHOENIX CONTACT
X2	12	=E1/028.3	Feed-through terminal block "Push-in" PT 2,5	3209510	PHOENIX CONTACT
X2	12	=E1/028.3	2,5/4-1,5/S reduction busbar	3214356	PHOENIX CONTACT
X2	13	=E1/501.3	Feed-through terminal block PT 1,5/S	3208100	PHOENIX CONTACT
X2	13	=E1/501.3	3 pt-1,5 busbar	3213027	PHOENIX CONTACT
X2	14	=E1/501.4	Feed-through terminal block PT 1,5/S	3208100	PHOENIX CONTACT
X2	15	=E1/501.4	Feed-through terminal block PT 1,5/S	3208100	PHOENIX CONTACT
X2	15	=E1/501.4	End cover PT1,5	D-PT 1,5/S 3208142	PHOENIX CONTACT
X2	16	=E1/028.3	Feed-through terminal block "Push-in" PT 2,5	3209510	PHOENIX CONTACT
X2	16	=E1/028.3	2,5/4-1,5/S reduction busbar	3214356	PHOENIX CONTACT

Parts list

TEKNIKER_v5

DEVICE TAG		PLACEMENT	DESCRIPTION	REFERENCE	MANUFACTURER
X2	17	=E1/501.3	Feed-through terminal block PT 1,5/S	3208100	PHOENIX CONTACT
X2	17	=E1/501.3	3 pt-1,5 busbar	3213027	PHOENIX CONTACT
X2	18	=E1/501.4	Feed-through terminal block PT 1,5/S	3208100	PHOENIX CONTACT
X2	19	=E1/501.4	Feed-through terminal block PT 1,5/S	3208100	PHOENIX CONTACT
X2	19	=E1/501.4	End cover PT1,5	D-PT 1,5/S 3208142	PHOENIX CONTACT
X2	20	=E1/028.4	Feed-through terminal block "Push-in" PT 2,5	3209510	PHOENIX CONTACT
X2	20	=E1/028.4	2,5/4-1,5/S reduction busbar	3214356	PHOENIX CONTACT
X2	21	=E1/220.6	Feed-through terminal block PT 1,5/S	3208100	PHOENIX CONTACT
X2	21	=E1/220.6	3 pt-1,5 busbar	3213027	PHOENIX CONTACT
X2	22	=E1/501.1	Feed-through terminal block PT 1,5/S	3208100	PHOENIX CONTACT
X2	23	=E1/501.2	Feed-through terminal block PT 1,5/S	3208100	PHOENIX CONTACT
X2	23	=E1/501.2	End cover PT1,5	D-PT 1,5/S 3208142	PHOENIX CONTACT
X2	24	=E1/028.4	Feed-through terminal block "Push-in" PT 2,5	3209510	PHOENIX CONTACT
X2	24	=E1/028.4	2,5/4-1,5/S reduction busbar	3214356	PHOENIX CONTACT
X2	25	=E1/220.6	Feed-through terminal block PT 1,5/S	3208100	PHOENIX CONTACT
X2	25	=E1/220.6	3 pt-1,5 busbar	3213027	PHOENIX CONTACT
X2	26	=E1/501.2	Feed-through terminal block PT 1,5/S	3208100	PHOENIX CONTACT
X2	27	=E1/501.2	Feed-through terminal block PT 1,5/S	3208100	PHOENIX CONTACT
X2	27	=E1/501.2	End cover PT1,5	D-PT 1,5/S 3208142	PHOENIX CONTACT
X10		=E1/002.8	End bracket	3022276	PHOENIX CONTACT
X10		=E1/002.8	End bracket	3022276	PHOENIX CONTACT
X10	1	=E1/510.3	Feed-through terminal block PT 1,5/S	3208100	PHOENIX CONTACT
X10	2	=E1/510.3	Feed-through terminal block PT 1,5/S	3208100	PHOENIX CONTACT
X10	3	=E1/510.4	Feed-through terminal block PT 1,5/S	3208100	PHOENIX CONTACT
X10	4	=E1/510.4	Feed-through terminal block PT 1,5/S	3208100	PHOENIX CONTACT
X10	5	=E1/510.5	Feed-through terminal block PT 1,5/S	3208100	PHOENIX CONTACT
X10	6	=E1/510.5	Feed-through terminal block PT 1,5/S	3208100	PHOENIX CONTACT
X10	7	=E1/510.6	Feed-through terminal block PT 1,5/S	3208100	PHOENIX CONTACT
X10	8	=E1/510.6	Feed-through terminal block PT 1,5/S	3208100	PHOENIX CONTACT
X10	9	=E1/511.3	Feed-through terminal block PT 1,5/S	3208100	PHOENIX CONTACT
X10	10	=E1/511.3	Feed-through terminal block PT 1,5/S	3208100	PHOENIX CONTACT
X10	11	=E1/511.4	Feed-through terminal block PT 1,5/S	3208100	PHOENIX CONTACT
X10	12	=E1/511.4	Feed-through terminal block PT 1,5/S	3208100	PHOENIX CONTACT
X10	13	=E1/511.5	Feed-through terminal block PT 1,5/S	3208100	PHOENIX CONTACT
X10	14	=E1/511.5	Feed-through terminal block PT 1,5/S	3208100	PHOENIX CONTACT
X10	15	=E1/511.6	Feed-through terminal block PT 1,5/S	3208100	PHOENIX CONTACT
X10	16	=E1/511.6	Feed-through terminal block PT 1,5/S	3208100	PHOENIX CONTACT
X10	17	=E1/512.3	Feed-through terminal block PT 1,5/S	3208100	PHOENIX CONTACT
X10	18	=E1/512.3	Feed-through terminal block PT 1,5/S	3208100	PHOENIX CONTACT

IK4 TEKNIKER Research Alliance

IK4-TEKNIKER
AVDA. OTAOLA 20
20600 Eibar (Gipuzkoa) Spain
Tfno.:(+34) 943 206744
Fax: (+34) 943 202757
Web: www.tekniker.es

Date	30/08/2022	2.0	29/08/2019	JOSE MANUEL			
Reviewed	F.LÓPEZ GARCIA	3.0	17/09/2019	JOSE MANUEL			
Drew by	JOSE MANUEL	Review	Date	Name	Review	Date	Name

7186-GIS_LSST 7186
LSST Global Safety Interlock System Design

Replaces | Replaced by

Parts list : PXC.3208100 - PXC.3208100

Customer: EMPRESARIOS AGRUPADOS
C/Magallanes, 3
28015
3098000
http://www.empresariosagrupados.es/

= REPORT
+ GIS-M2CAM-CBT0101

Parts list

TEKNIKER_v5

DEVICE TAG		PLACEMENT	DESCRIPTION	REFERENCE	MANUFACTURER
X10	19	=E1/512.4	Feed-through terminal block PT 1,5/S	3208100	PHOENIX CONTACT
X10	20	=E1/512.4	Feed-through terminal block PT 1,5/S	3208100	PHOENIX CONTACT
X10	21	=E1/520.1	Feed-through terminal block PT 1,5/S	3208100	PHOENIX CONTACT
X10	22	=E1/520.2	Feed-through terminal block PT 1,5/S	3208100	PHOENIX CONTACT
X10	23	=E1/520.5	Feed-through terminal block PT 1,5/S	3208100	PHOENIX CONTACT
X10	24	=E1/520.6	Feed-through terminal block PT 1,5/S	3208100	PHOENIX CONTACT
X10	25	=E1/521.1	Feed-through terminal block PT 1,5/S	3208100	PHOENIX CONTACT
X10	26	=E1/521.2	Feed-through terminal block PT 1,5/S	3208100	PHOENIX CONTACT
X10	27	=E1/521.5	Feed-through terminal block PT 1,5/S	3208100	PHOENIX CONTACT
X10	28	=E1/521.6	Feed-through terminal block PT 1,5/S	3208100	PHOENIX CONTACT
X10	29	=E1/522.1	Feed-through terminal block PT 1,5/S	3208100	PHOENIX CONTACT
X10	30	=E1/522.2	Feed-through terminal block PT 1,5/S	3208100	PHOENIX CONTACT
X10	31	=E1/522.5	Feed-through terminal block PT 1,5/S	3208100	PHOENIX CONTACT
X10	32	=E1/522.6	Feed-through terminal block PT 1,5/S	3208100	PHOENIX CONTACT
X10	33	=E1/523.1	Feed-through terminal block PT 1,5/S	3208100	PHOENIX CONTACT
X10	34	=E1/523.2	Feed-through terminal block PT 1,5/S	3208100	PHOENIX CONTACT
X10	35	=E1/523.5	Feed-through terminal block PT 1,5/S	3208100	PHOENIX CONTACT
X10	36	=E1/523.6	Feed-through terminal block PT 1,5/S	3208100	PHOENIX CONTACT
X10	37	=E1/524.1	Feed-through terminal block PT 1,5/S	3208100	PHOENIX CONTACT
X10	38	=E1/524.2	Feed-through terminal block PT 1,5/S	3208100	PHOENIX CONTACT
X10	39	=E1/524.5	Feed-through terminal block PT 1,5/S	3208100	PHOENIX CONTACT
X10	40	=E1/524.6	Feed-through terminal block PT 1,5/S	3208100	PHOENIX CONTACT
X10	41	=E1/525.1	Feed-through terminal block PT 1,5/S	3208100	PHOENIX CONTACT
X10	42	=E1/525.2	Feed-through terminal block PT 1,5/S	3208100	PHOENIX CONTACT
X10	43	=E1/525.5	Feed-through terminal block PT 1,5/S	3208100	PHOENIX CONTACT
X10	44	=E1/525.6	Feed-through terminal block PT 1,5/S	3208100	PHOENIX CONTACT
X10	45	=E1/526.1	Feed-through terminal block PT 1,5/S	3208100	PHOENIX CONTACT
X10	46	=E1/526.2	Feed-through terminal block PT 1,5/S	3208100	PHOENIX CONTACT
X10	47	=E1/526.5	Feed-through terminal block PT 1,5/S	3208100	PHOENIX CONTACT
X10	48	=E1/526.6	Feed-through terminal block PT 1,5/S	3208100	PHOENIX CONTACT
X10	48	=E1/526.6	End cover PT1,5	D-PT 1,5/S 3208142	PHOENIX CONTACT

IK4 TEKNIKER Research Alliance

IK4-TEKNIKER
AVDA. OTAOLA 20
20600 Eibar (Gipuzkoa) Spain
Tfno.:(+34) 943 206744
Fax: (+34) 943 202757
Web: www.tekniker.es

Date	30/08/2022	2.0	29/08/2019	JOSE MANUEL			
Reviewed	F.LÓPEZ GARCIA	3.0	17/09/2019	JOSE MANUEL			
Drew by	JOSE MANUEL	Review	Date	Name	Review	Date	Name

7186-GIS_LSST 7186
LSST Global Safety Interlock System Design

Replaces | Replaced by

Parts list : PXC.3208100 - PXC.3208142

Customer: EMPRESARIOS AGRUPADOS
C/Magallanes, 3
28015
3098000
http://www.empresariosagrupados.es/

= REPORT
+ GIS-M2CAM-CBT0101

Terminal diagram

F13_001_TK_V2

Strip

=E1+GIS-M2CAM-CBT0101-X1

POWER IN

Function text	Cable name	Cable type	Target designation	Connection point	Terminal	Jumper	Wire	Target designation	Connection point	Cable name	Cable type	Page / column
			-002F1	1	1	.	L1	L1				/002.0
			-002F1	3	2	.	L2	L2				/002.1
			-002F1	5	3	.	L3	L3				/002.1

◁ 1000.c

2003 ▷

IK4 TEKNIKER Research Alliance
IK4-TEKNIKER
AVDA. OTAOLA 20
20600 Eibar (Gipuzkoa) Spain
Tfno.:(+34) 943 206744
Fax: (+34) 943 202757
Web: www.tekniker.es

Date	30/08/2022	2.0	29/08/2019	JOSE MANUEL				
Reviewed	F.LÓPEZ GARCIA	3.0	17/09/2019	JOSE MANUEL				
Drew by	JOSE MANUEL	Review	Date	Name	Review	Date	Name	

7186-GIS_LSST 7186
LSST Global Safety Interlock System Design

Replaces | Replaced by

Terminal diagram
=E1+GIS-M2CAM-CBT0101-X1

Customer: EMPRESARIOS AGRUPADOS
C/Magallanes, 3
28015
3098000
http://www.empresariosagrupados.es/

= REPORT
+ GIS-M2CAM-CBT0101

Terminal diagram

F13_001_TK_V2

Strip

=E1+GIS-M2CAM-CBT0101-X2

DISTRIBUTION

Function text	Cable name / Cable type	Target designation	Connection point	Terminal	Jumper	Wire	Target designation	Connection point	Cable name / Cable type	Page / column
400V 50Hz		-020F1	1	1		L1.1	-002F1	2		/002.0
=				2			-020F2	1		/020.7
=				3						/020.8
=		-020F1	3	4		L2.1	-002F1	4		/002.1
=				5			-020F2	3		/020.7
=				6						/020.8
=		-020F1	5	7		L3.1	-002F1	6		/002.1
=				8			-020F2	5		/020.7
=				9						/020.8
0V DISTRIBUTION				10		0V	0V			/028.2
=				11		0V				/028.5
24VDC I/Os		-500A1-X2	X2	12		+V2	-028F1	2.1		/028.3
=				13						/501.3
=				14						/501.4
=				15						/501.4
=		-500A1-X2	X2	16		0V2				/028.3
=				17						/501.3
=				18						/501.4
=				19						/501.4
24 VDC CONTROL		-220U1-X3	US1	20		+V1	+V			/028.4
=		-500A1-X1	X1	21		+V1	-220U1-X3	US2		/220.6
=				22						/501.1
=				23						/501.2
=		-220U1-X3	GND	24		0V1				/028.4
=		-500A1-X1	X1	25		0V1	-220U1-X3	GND		/220.6
=				26						/501.2
=				27						/501.2

IK4 TEKNIKER Research Alliance

IK4-TEKNIKER
AVDA. OTAOLA 20
20600 Eibar (Gipuzkoa) Spain
Tfno.:(+34) 943 206744
Fax: (+34) 943 202757
Web: www.tekniker.es

Date	30/08/2022	2.0	29/08/2019	JOSE MANUEL				
Reviewed	F.LÓPEZ GARCIA	3.0	17/09/2019	JOSE MANUEL				
Drew by	JOSE MANUEL	Review	Date	Name	Review	Date	Name	

7186-GIS_LSST 7186

LSST Global Safety Interlock System Design

Replaces | Replaced by

Terminal diagram
=E1+GIS-M2CAM-CBT0101-X2

Customer: EMPRESARIOS AGRUPADOS
C/Magallanes, 3
28015
3098000
http://www.empresariosagrupados.es/

= REPORT
+ GIS-M2CAM-CBT0101

Terminal diagram

F13_001_TK_V2

Strip

=E1+GIS-M2CAM-CBT0101-X10

FIELD CONNECTIONS

Function text	Cable name / Cable type	Target designation	Connection point	Terminal	Jumper	Wire	Target designation	Connection point	Cable name / Cable type	Page / column
M2 ACTUATORS EMERGENCY				1	.	510.01	-500A2	12		/510.3
=				2	.	E400.0	-500A2	11		/510.3
=				3	.	510.02	-500A2	13		/510.4
=				4	.	E400.1	-500A2	14		/510.4
M2 HEXAPOD EMERGENCY				5	.	510.03	-500A2	22		/510.5
=				6	.	E400.2	-500A2	21		/510.5
=				7	.	510.04	-500A2	23		/510.6
=				8	.	E400.3	-500A2	24		/510.6
CAMERA ROTATOR EMERGENCY				9	.	511.01	-500A3	12		/511.3
=				10	.	E401.0	-500A3	11		/511.3
=				11	.	511.02	-500A3	13		/511.4
=				12	.	E401.1	-500A3	14		/511.4
CAMERA HEXAPOD EMERGENCY				13	.	511.03	-500A3	22		/511.5
=				14	.	E401.2	-500A3	21		/511.5
=				15	.	511.04	-500A3	23		/511.6
=				16	.	E401.3	-500A3	24		/511.6
camera rotator Pin Inserted				17	.	512.03	-500A4	12		/512.3
=				18	.	E402.0	-500A4	11		/512.3
SAFE INPUT RESERVE				19	.	512.04	-500A4	13		/512.4
=				20	.	E402.1	-500A4	14		/512.4
M2 ACTUATORS EMERGENCY				21	.	520.01	-500A10	11		/520.1
=				22	.	A400.0	-500A10	12		/520.2
=				23	.	520.02	-500A10	31		/520.5
=				24	.	A400.1	-500A10	32		/520.6
M2 HEXAPOD EMERGENCY				25	.	521.01	-500A11	11		/521.1
=				26	.	A401.0	-500A11	12		/521.2
=				27	.	521.02	-500A11	31		/521.5
=				28	.	A401.1	-500A11	32		/521.6
CAMERA ROTATOR EMERGENCY				29	.	522.01	-500A12	11		/522.1
=				30	.	A402.0	-500A12	12		/522.2
=				31	.	522.02	-500A12	31		/522.5
=				32	.	A402.1	-500A12	32		/522.6
CAMERA HEXAPOD EMERGENCY				33	.	523.01	-500A13	11		/523.1
=				34	.	A403.0	-500A13	12		/523.2
=				35	.	523.02	-500A13	31		/523.5

Terminal diagram

F13_001_TK_V2

Strip

=E1+GIS-M2CAM-CBT0101-X10

FIELD CONNECTIONS

Function text	Cable name / Cable type	Target designation	Connection point	Terminal	Jumper	Wire	Target designation	Connection point	Cable name / Cable type	Page / column
CAMERA HEXAPOD EMERGENCY				36	.	A403.1	-500A13	32		/523.6
SAFE OUTPUT RESERVE				37	.	524.01	-500A14	11		/524.1
=				38	.	A404.0	-500A14	12		/524.2
=				39	.	524.02	-500A14	31		/524.5
=				40	.	A404.1	-500A14	32		/524.6
M2 ACTUATORS EMERGENCY				41	.	525.01	-500A15	11		/525.1
=				42	.	A405.0	-500A15	12		/525.2
M2 HEXAPOD EMERGENCY				43	.	525.02	-500A15	31		/525.5
=				44	.	A405.1	-500A15	32		/525.6
CAMERA ROTATOR EMERGENCY				45	.	526.01	-500A16	11		/526.1
=				46	.	A406.0	-500A16	12		/526.2
CAMERA HEXAPOD EMERGENCY				47	.	526.02	-500A16	31		/526.5
=				48	.	A406.1	-500A16	32		/526.6

IK4 TEKNIKER Research Alliance

IK4-TEKNIKER
AVDA. OTAOLA 20
20600 Eibar (Gipuzkoa) Spain
Tfno.:(+34) 943 206744
Fax: (+34) 943 202757
Web: www.tekniker.es

Date	30/08/2022	2.0	29/08/2019	JOSE MANUEL				
Reviewed	F.LÓPEZ GARCIA	3.0	17/09/2019	JOSE MANUEL				
Drew by	JOSE MANUEL	Review	Date	Name	Review	Date	Name	

7186-GIS_LSST 7186

LSST Global Safety Interlock System Design

Replaces | Replaced by

Terminal diagram
=E1+GIS-M2CAM-CBT0101-X10

Customer: EMPRESARIOS AGRUPADOS
C/Magallanes, 3
28015
3098000
http://www.empresariosagrupados.es/

= REPORT
+ GIS-M2CAM-CBT0101

Cable overview

F10_003 - TK

Cable designation	from	to	Cable type	Condctrs	ø	Length	Function text
=E1-220W1	=E1-220U1-X1	=E1-500A1	YE ETH CAT6	5	1	1,5	SafetyNet-GIS_M2CAM YELOW

IK4 TEKNIKER Research Alliance

IK4-TEKNIKER
AVDA. OTAOLA 20
20600 Eibar (Gipuzkoa) Spain
Tfno.:(+34) 943 206744
Fax: (+34) 943 202757
Web: www.tekniker.es

Date	17/09/2019	2.0	29/08/2019	JOSE MANUEL			
Reviewed	F.LÓPEZ GARCIA	3.0	17/09/2019	JOSE MANUEL			
Drew by	JOSE MANUEL	Review	Date	Name	Review	Date	Name

7186-GIS_LSST 7186

LSST Global Safety Interlock System Design

Replaces | Replaced by

Cable overview :
=E1+GIS-M2CAM-CBT0101-220W1 -
=E1+GIS-M2CAM-CBT0101-220W1

Customer:

EMPRESARIOS AGRUPADOS
C/Magallanes, 3
28015
3098000

http://www.empresariosagrupados.es/

= REPORT
+ GIS-M2CAM-CBT0101

Cable diagram

F09_001_TK

Identificador de cable	Referencia Cable	no. of conductors	cross-section	cable length	function text
=E1+GIS-M2CAM-CBT0101-220W1	YE ETH CAT6	5	1	1,5	SafetyNet-GIS_M2CAM YELOW

function text	X-Ref	ORIGEN	Pin Origen	conductor	Etiqueta Hilo	DESTINO	Pin Destino	X-Ref	function text
	/220.5	-220U1-X1		**ETH**		-500A1	-X3	/502.2	

IK4 TEKNIKER Research Alliance

IK4-TEKNIKER
AVDA. OTAOLA 20
20600 Eibar (Gipuzkoa) Spain
Tfno.:(+34) 943 206744
Fax: (+34) 943 202757
Web: www.tekniker.es

Date	30/08/2022	2.0	29/08/2019	JOSE MANUEL			
Reviewed	F.LÓPEZ GARCIA	3.0	17/09/2019	JOSE MANUEL			
Drew by	JOSE MANUEL	Review	Date	Name	Review	Date	Name

7186-GIS_LSST 7186

LSST Global Safety Interlock System Design

Replaces | Replaced by

Cable diagram
=E1+GIS-M2CAM-CBT0101-220W1

Customer:

EMPRESARIOS AGRUPADOS

EMPRESARIOS AGRUPADOS
C/Magallanes, 3
28015
3098000

http://www.empresariosagrupados.es/

= REPORT
+ GIS-M2CAM-CBT0101

Customer

EMPRESARIOS AGRUPADOS

EMPRESARIOS AGRUPADOS

C/Magallanes, 3
28015
ESPAÑA
3098000

http://www.empresariosagrupados.es/

Project:

7186-GIS_LSST
7186
LSST Global Safety Interlock System Design

REPORT
REPORT

GIS-PfAux-CBT0101
GIS Pflow & Auxiliary control CABINET

Number of pages: 178

Made by:

IK4 TEKNIKER Research Alliance

IK4-TEKNIKER

AVDA. OTAOLA 20
20600 Eibar (Gipuzkoa) Spain
Tfno. : (+34) 943 206744
Fax : (+34) 943 202757
Web: www.tekniker.es

2.0	CHILE ASEMBLY	29/08/2019	JOSE MANUEL
3.0	CHILE ASEMBLY (Specific cabinets for M2CAM & PfAux)	17/09/2019	JOSE MANUEL
Review	Review description	Date	Reviewed

Drew by:	J.M.CASTAÑO
Reviewed:	F.LÓPEZ GARCIA
Date:	04/05/2017
Replaces:	
Replaced by:	

Parts list

TEKNIKER_v5

DEVICE TAG		PLACEMENT	DESCRIPTION	REFERENCE	MANUFACTURER
500A1		=E1/500.3	PSSu head module	PSSu H FS SN SDT 314 085	PILZ
500A1		=E1/500.3	TERMINALS	PSSu A Con 2/8 C 313 111	PILZ
500A2		=E1/500.4	Safety digital input module	PSSu E F 4DI-T 314 200	PILZ
500A2		=E1/500.4	Base module Cage clamp terminal	PSSu BP 1/8 C-T 314 601	PILZ
500A3		=E1/500.5	Safety digital input module	PSSu E F 4DI-T 314 200	PILZ
500A3		=E1/500.5	Base module Cage clamp terminal	PSSu BP 1/8 C-T 314 601	PILZ
500A10		=E1/500.5	Safety digital output module	PSSu E F 2DOR 8-T 314 225	PILZ
500A10		=E1/500.5	Base module Cage clamp terminal	PSSu BP 2/16 C-T 314 629	PILZ
500A11		=E1/500.5	Safety digital output module	PSSu E F 2DOR 8-T 314 225	PILZ
500A11		=E1/500.5	Base module Cage clamp terminal	PSSu BP 2/16 C-T 314 629	PILZ
500A12		=E1/500.6	Safety digital output module	PSSu E F 2DOR 8-T 314 225	PILZ
500A12		=E1/500.6	Base module Cage clamp terminal	PSSu BP 2/16 C-T 314 629	PILZ
500A13		=E1/500.6	Safety digital output module	PSSu E F 2DOR 8-T 314 225	PILZ
500A13		=E1/500.6	Base module Cage clamp terminal	PSSu BP 2/16 C-T 314 629	PILZ
500A14		=E1/500.6	Safety digital output module	PSSu E F 2DOR 8-T 314 225	PILZ
500A14		=E1/500.6	Base module Cage clamp terminal	PSSu BP 2/16 C-T 314 629	PILZ
002F1		=E1/002.0	Miniature Circuit Breaker C 6A	A9F79306	SCHNEIDER ELECTRIC
020F1		=E1/020.1	Miniature Circuit Breaker C 6A	A9F79306	SCHNEIDER ELECTRIC
020F2		=E1/020.4	Miniature Circuit Breaker C 6A	A9F79306	SCHNEIDER ELECTRIC
028F1		=E1/028.2	Base element	2800929	PHOENIX CONTACT
028F1		=E1/028.2	Plug-in bridge	3030255	PHOENIX CONTACT
028F1		=E1/028.2	Plug-in bridge	3036958	PHOENIX CONTACT
028F1-F1		=E1/028.2	Thermomagnetic device circuit breaker	2800850	PHOENIX CONTACT
020G1		=E1/020.0	Power supply unit	2904620	PHOENIX CONTACT
020G2		=E1/020.4	Power supply unit	2904620	PHOENIX CONTACT
020G3		=E1/020.7	Redundancy module, with protective coating	2320173	PHOENIX CONTACT
PE		=E1/002.7	earth busbar	550220 TCB 20x5	ERICO
002SH1	1	=E1/002.7	Connection terminal block	0404017	PHOENIX CONTACT
002SH1	1	=E1/002.7	Support bracket	0404428	PHOENIX CONTACT
002SH1	1	=E1/002.7	Support bracket	0404428	PHOENIX CONTACT
002SH1	1	=E1/002.7	Neutral busbar	0402174	PHOENIX CONTACT
220U1		=E1/220.2	FO converters	2891315	PHOENIX CONTACT
220W1		=E1/220.5	YELOW ETH CABLE	BLB.C6PC70S-YE-5	BLACK BOX
X1		=E1/002.8	End bracket	3022276	PHOENIX CONTACT
X1		=E1/002.8	End bracket	3022276	PHOENIX CONTACT
X1	1	=E1/002.0	Feed-through terminal block "Push-in" PT 2,5	3209510	PHOENIX CONTACT
X1	2	=E1/002.1	Feed-through terminal block "Push-in" PT 2,5	3209510	PHOENIX CONTACT
X1	3	=E1/002.1	Feed-through terminal block "Push-in" PT 2,5	3209510	PHOENIX CONTACT
X1	3	=E1/002.1	End cover ST-PT 2,5	3030417	Phoenix Contact

Parts list

TEKNIKER_v5

DEVICE TAG		PLACEMENT	DESCRIPTION	REFERENCE	MANUFACTURER
X2		=E1/002.8	End bracket	3022276	PHOENIX CONTACT
X2		=E1/002.8	End bracket	3022276	PHOENIX CONTACT
X2	1	=E1/002.0	Feed-through terminal block "Push-in" PT 2,5	3209510	PHOENIX CONTACT
X2	1	=E1/002.0	3 ST2,5 busbar	3030174	PHOENIX CONTACT
X2	2	=E1/020.5	Feed-through terminal block "Push-in" PT 2,5	3209510	PHOENIX CONTACT
X2	3	=E1/020.6	Feed-through terminal block "Push-in" PT 2,5	3209510	PHOENIX CONTACT
X2	4	=E1/002.1	Feed-through terminal block "Push-in" PT 2,5	3209510	PHOENIX CONTACT
X2	4	=E1/002.1	3 ST2,5 busbar	3030174	PHOENIX CONTACT
X2	5	=E1/020.5	Feed-through terminal block "Push-in" PT 2,5	3209510	PHOENIX CONTACT
X2	6	=E1/020.6	Feed-through terminal block "Push-in" PT 2,5	3209510	PHOENIX CONTACT
X2	7	=E1/002.1	Feed-through terminal block "Push-in" PT 2,5	3209510	PHOENIX CONTACT
X2	7	=E1/002.1	3 ST2,5 busbar	3030174	PHOENIX CONTACT
X2	8	=E1/020.5	Feed-through terminal block "Push-in" PT 2,5	3209510	PHOENIX CONTACT
X2	9	=E1/020.6	Feed-through terminal block "Push-in" PT 2,5	3209510	PHOENIX CONTACT
X2	9	=E1/020.6	End cover ST-PT 2,5	3030417	PHOENIX CONTACT
X2	10	=E1/028.2	Feed-through terminal block "Push-in" PT 2,5	3209510	PHOENIX CONTACT
X2	10	=E1/028.2	2 ST2,5 busbar	3030161	PHOENIX CONTACT
X2	11	=E1/028.5	Feed-through terminal block "Push-in" PT 2,5	3209510	PHOENIX CONTACT
X2	11	=E1/028.5	End cover ST-PT 2,5	3030417	PHOENIX CONTACT
X2	12	=E1/028.3	Feed-through terminal block "Push-in" PT 2,5	3209510	PHOENIX CONTACT
X2	12	=E1/028.3	2,5/4-1,5/S reduction busbar	3214356	PHOENIX CONTACT
X2	13	=E1/501.3	Feed-through terminal block PT 1,5/S	3208100	PHOENIX CONTACT
X2	13	=E1/501.3	3 pt-1,5 busbar	3213027	PHOENIX CONTACT
X2	14	=E1/501.4	Feed-through terminal block PT 1,5/S	3208100	PHOENIX CONTACT
X2	15	=E1/501.4	Feed-through terminal block PT 1,5/S	3208100	PHOENIX CONTACT
X2	15	=E1/501.4	End cover PT1,5	D-PT 1,5/S 3208142	PHOENIX CONTACT
X2	16	=E1/028.3	Feed-through terminal block "Push-in" PT 2,5	3209510	PHOENIX CONTACT
X2	16	=E1/028.3	2,5/4-1,5/S reduction busbar	3214356	PHOENIX CONTACT
X2	17	=E1/501.3	Feed-through terminal block PT 1,5/S	3208100	PHOENIX CONTACT
X2	17	=E1/501.3	3 pt-1,5 busbar	3213027	PHOENIX CONTACT
X2	18	=E1/501.4	Feed-through terminal block PT 1,5/S	3208100	PHOENIX CONTACT
X2	19	=E1/501.4	Feed-through terminal block PT 1,5/S	3208100	PHOENIX CONTACT
X2	19	=E1/501.4	End cover PT1,5	D-PT 1,5/S 3208142	PHOENIX CONTACT
X2	20	=E1/028.4	Feed-through terminal block "Push-in" PT 2,5	3209510	PHOENIX CONTACT
X2	20	=E1/028.4	2,5/4-1,5/S reduction busbar	3214356	PHOENIX CONTACT
X2	21	=E1/220.6	Feed-through terminal block PT 1,5/S	3208100	PHOENIX CONTACT
X2	21	=E1/220.6	3 pt-1,5 busbar	3213027	PHOENIX CONTACT
X2	22	=E1/501.1	Feed-through terminal block PT 1,5/S	3208100	PHOENIX CONTACT
X2	23	=E1/501.2	Feed-through terminal block PT 1,5/S	3208100	PHOENIX CONTACT

Parts list

TEKNIKER_v5

DEVICE TAG		PLACEMENT	DESCRIPTION	REFERENCE	MANUFACTURER
X2	23	=E1/501.2	End cover PT1,5	D-PT 1,5/S 3208142	PHOENIX CONTACT
X2	24	=E1/028.4	Feed-through terminal block "Push-in" PT 2,5	3209510	PHOENIX CONTACT
X2	24	=E1/028.4	2,5/4-1,5/S reduction busbar	3214356	PHOENIX CONTACT
X2	25	=E1/220.6	Feed-through terminal block PT 1,5/S	3208100	PHOENIX CONTACT
X2	25	=E1/220.6	3 pt-1,5 busbar	3213027	PHOENIX CONTACT
X2	26	=E1/501.2	Feed-through terminal block PT 1,5/S	3208100	PHOENIX CONTACT
X2	27	=E1/501.2	Feed-through terminal block PT 1,5/S	3208100	PHOENIX CONTACT
X2	27	=E1/501.2	End cover PT1,5	D-PT 1,5/S 3208142	PHOENIX CONTACT
X10		=E1/002.8	End bracket	3022276	PHOENIX CONTACT
X10		=E1/002.8	End bracket	3022276	PHOENIX CONTACT
X10	1	=E1/510.3	Feed-through terminal block PT 1,5/S	3208100	PHOENIX CONTACT
X10	2	=E1/510.3	Feed-through terminal block PT 1,5/S	3208100	PHOENIX CONTACT
X10	3	=E1/510.4	Feed-through terminal block PT 1,5/S	3208100	PHOENIX CONTACT
X10	4	=E1/510.4	Feed-through terminal block PT 1,5/S	3208100	PHOENIX CONTACT
X10	5	=E1/510.5	Feed-through terminal block PT 1,5/S	3208100	PHOENIX CONTACT
X10	6	=E1/510.5	Feed-through terminal block PT 1,5/S	3208100	PHOENIX CONTACT
X10	7	=E1/510.6	Feed-through terminal block PT 1,5/S	3208100	PHOENIX CONTACT
X10	8	=E1/510.6	Feed-through terminal block PT 1,5/S	3208100	PHOENIX CONTACT
X10	9	=E1/511.3	Feed-through terminal block PT 1,5/S	3208100	PHOENIX CONTACT
X10	10	=E1/511.3	Feed-through terminal block PT 1,5/S	3208100	PHOENIX CONTACT
X10	11	=E1/511.4	Feed-through terminal block PT 1,5/S	3208100	PHOENIX CONTACT
X10	12	=E1/511.4	Feed-through terminal block PT 1,5/S	3208100	PHOENIX CONTACT
X10	13	=E1/520.1	Feed-through terminal block PT 1,5/S	3208100	PHOENIX CONTACT
X10	14	=E1/520.2	Feed-through terminal block PT 1,5/S	3208100	PHOENIX CONTACT
X10	15	=E1/520.5	Feed-through terminal block PT 1,5/S	3208100	PHOENIX CONTACT
X10	16	=E1/520.6	Feed-through terminal block PT 1,5/S	3208100	PHOENIX CONTACT
X10	17	=E1/521.1	Feed-through terminal block PT 1,5/S	3208100	PHOENIX CONTACT
X10	18	=E1/521.2	Feed-through terminal block PT 1,5/S	3208100	PHOENIX CONTACT
X10	19	=E1/521.5	Feed-through terminal block PT 1,5/S	3208100	PHOENIX CONTACT
X10	20	=E1/521.6	Feed-through terminal block PT 1,5/S	3208100	PHOENIX CONTACT
X10	21	=E1/522.1	Feed-through terminal block PT 1,5/S	3208100	PHOENIX CONTACT
X10	22	=E1/522.2	Feed-through terminal block PT 1,5/S	3208100	PHOENIX CONTACT
X10	23	=E1/522.5	Feed-through terminal block PT 1,5/S	3208100	PHOENIX CONTACT
X10	24	=E1/522.6	Feed-through terminal block PT 1,5/S	3208100	PHOENIX CONTACT
X10	25	=E1/523.1	Feed-through terminal block PT 1,5/S	3208100	PHOENIX CONTACT
X10	26	=E1/523.2	Feed-through terminal block PT 1,5/S	3208100	PHOENIX CONTACT
X10	27	=E1/523.5	Feed-through terminal block PT 1,5/S	3208100	PHOENIX CONTACT
X10	28	=E1/523.6	Feed-through terminal block PT 1,5/S	3208100	PHOENIX CONTACT
X10	29	=E1/524.1	Feed-through terminal block PT 1,5/S	3208100	PHOENIX CONTACT

Parts list

TEKNIKER_v5

DEVICE TAG		PLACEMENT	DESCRIPTION	REFERENCE	MANUFACTURER
X10	30	=E1/524.2	Feed-through terminal block PT 1,5/S	3208100	PHOENIX CONTACT
X10	31	=E1/524.5	Feed-through terminal block PT 1,5/S	3208100	PHOENIX CONTACT
X10	32	=E1/524.6	Feed-through terminal block PT 1,5/S	3208100	PHOENIX CONTACT
X10	32	=E1/524.6	End cover PT1,5	D-PT 1,5/S 3208142	PHOENIX CONTACT

Terminal diagram

F13_001_TK_V2

Strip

=E1+GIS-PfAux-CBT0101-X1

POWER IN

Function text	Cable name	Cable type	Target designation	Connection point	Terminal	Jumper	Wire	Target designation	Connection point	Cable name	Cable type	Page / column
			-002F1	1	1	.	L1	L1				/002.0
			-002F1	3	2	.	L2	L2				/002.1
			-002F1	5	3	.	L3	L3				/002.1

IK4 TEKNIKER Research Alliance

IK4-TEKNIKER
AVDA. OTAOLA 20
20600 Eibar (Gipuzkoa) Spain
Tfno.:(+34) 943 206744
Fax: (+34) 943 202757
Web: www.tekniker.es

Date	30/08/2022	2.0	29/08/2019	JOSE MANUEL				
Reviewed	F.LÓPEZ GARCIA	3.0	17/09/2019	JOSE MANUEL				
Drew by	JOSE MANUEL	Review	Date	Name	Review	Date	Name	

7186-GIS_LSST 7186

LSST Global Safety Interlock System Design

Replaces | Replaced by

Terminal diagram
=E1+GIS-PfAux-CBT0101-X1

Customer: EMPRESARIOS AGRUPADOS

EMPRESARIOS AGRUPADOS
C/Magallanes, 3
28015
3098000
http://www.empresariosagrupados.es/

= REPORT
+ GIS-PfAux-CBT0101

Terminal diagram

F13_001_TK_V2

Strip

=E1+GIS-PfAux-CBT0101-X2

DISTRIBUTION

Function text	Cable name / Cable type	Target designation	Connection point	Terminal	Jumper	Wire	Target designation	Connection point	Cable name / Cable type	Page / column
400V 50Hz		-020F1	1	1		L1.1	-002F1	2		/002.0
=				2			-020F2	1		/020.5
=				3						/020.6
=		-020F1	3	4		L2.1	-002F1	4		/002.1
=				5			-020F2	3		/020.5
=				6						/020.6
=		-020F1	5	7		L3.1	-002F1	6		/002.1
=				8			-020F2	5		/020.5
=				9						/020.6
0V DISTRIBUTION				10		0V	0V			/028.2
=				11		0V				/028.5
24VDC I/Os		-500A1-X2	X2	12		+V2	-028F1	2.1		/028.3
=				13						/501.3
=				14						/501.4
=				15						/501.4
=		-500A1-X2	X2	16		0V2				/028.3
=				17						/501.3
=				18						/501.4
=				19						/501.4
24 VDC CONTROL		-028F1	1	20		+V1	+V			/028.4
=		-500A1-X1	X1	21		+V1	-220U1-X3	US2		/220.6
=				22						/501.1
=				23						/501.2
=				24		0V1				/028.4
=		-500A1-X1	X1	25		0V1	-220U1-X3	GND		/220.6
=				26						/501.2
=				27						/501.2

IK4 TEKNIKER Research Alliance

IK4-TEKNIKER
AVDA. OTAOLA 20
20600 Eibar (Gipuzkoa) Spain
Tfno.:(+34) 943 206744
Fax: (+34) 943 202757
Web: www.tekniker.es

Date	30/08/2022	2.0	29/08/2019	JOSE MANUEL				
Reviewed	F.LÓPEZ GARCIA	3.0	17/09/2019	JOSE MANUEL				
Drew by	JOSE MANUEL	Review	Date	Name	Review	Date	Name	

7186-GIS_LSST 7186

LSST Global Safety Interlock System Design

Replaces | Replaced by

Terminal diagram
=E1+GIS-PfAux-CBT0101-X2

Customer: EMPRESARIOS AGRUPADOS
C/Magallanes, 3
28015
3098000
http://www.empresariosagrupados.es/

= REPORT
+ GIS-PfAux-CBT0101

Terminal diagram

F13_001_TK_V2

Strip

=E1+GIS-PfAux-CBT0101-X10

FIELD CONNECTIONS

Function text	Cable name / Cable type	Target designation	Connection point	Terminal	Jumper	Wire	Target designation	Connection point	Cable name / Cable type	Page / column
PFLOW&AUXILIARY EMERGENCY				1	.	510.01	-500A2	12		/510.3
=				2	.	E500.0	-500A2	11		/510.3
=				3	.	510.02	-500A2	13		/510.4
=				4	.	E500.1	-500A2	14		/510.4
Man-Lift not parked				5	.	510.03	-500A2	22		/510.5
=				6	.	E500.2	-500A2	21		/510.5
Plataform Lift above Enclosure				7	.	510.04	-500A2	23		/510.6
=				8	.	E500.3	-500A2	24		/510.6
Platform Lift Not parked				9	.	511.03	-500A3	12		/511.3
=				10	.	E501.0	-500A3	11		/511.3
safe input reserve				11	.	511.04	-500A3	13		/511.4
=				12	.	E501.1	-500A3	14		/511.4
PFLOW EMERGENCY				13	.	520.01	-500A10	11		/520.1
=				14	.	A500.0	-500A10	12		/520.2
=				15	.	520.02	-500A10	31		/520.5
=				16	.	A500.1	-500A10	32		/520.6
AUX CONTROL EMERGENCY				17	.	521.01	-500A11	11		/521.1
=				18	.	A501.0	-500A11	12		/521.2
=				19	.	521.02	-500A11	31		/521.5
=				20	.	A501.1	-500A11	32		/521.6
STO MAN LIFT				21	.	522.01	-500A12	11		/522.1
=				22	.	A502.0	-500A12	12		/522.2
=				23	.	522.02	-500A12	31		/522.5
=				24	.	A502.1	-500A12	32		/522.6
PFLOW EMERGENCY				25	.	523.01	-500A13	11		/523.1
=				26	.	A503.0	-500A13	12		/523.2
AUX EMERGENCY				27	.	523.02	-500A13	31		/523.5
=				28	.	A503.1	-500A13	32		/523.6
MAN LIFT EMERGENCY				29	.	524.01	-500A14	11		/524.1
=				30	.	A504.0	-500A14	12		/524.2
SAFE OUTPUT RESERVE				31	.	524.02	-500A14	31		/524.5
=				32	.	A504.1	-500A14	32		/524.6

IK4 TEKNIKER Research Alliance

IK4-TEKNIKER
AVDA. OTAOLA 20
20600 Eibar (Gipuzkoa) Spain
Tfno.:(+34) 943 206744
Fax: (+34) 943 202757
Web: www.tekniker.es

Date	30/08/2022	2.0	29/08/2019	JOSE MANUEL				
Reviewed	F.LÓPEZ GARCIA	3.0	17/09/2019	JOSE MANUEL				
Drew by	JOSE MANUEL	Review	Date	Name	Review	Date	Name	

7186-GIS_LSST 7186

LSST Global Safety Interlock System Design

Replaces | Replaced by

Terminal diagram
=E1+GIS-PfAux-CBT0101-X10

Customer: EMPRESARIOS AGRUPADOS
C/Magallanes, 3
28015
3098000
http://www.empresariosagrupados.es/

= REPORT
+ GIS-PfAux-CBT0101

Cable overview

F10_003 - TK

Cable designation	from	to	Cable type	Condctrs	ø	Length	Function text
=E1-220W1	=E1-220U1-X1	=E1-500A1	YE ETH CAT6	5	1	1,5	SafetyNet-GIS_PFLOW YELOW

IK4 TEKNIKER Research Alliance

IK4-TEKNIKER
AVDA. OTAOLA 20
20600 Eibar (Gipuzkoa) Spain
Tfno.:(+34) 943 206744
Fax: (+34) 943 202757
Web: www.tekniker.es

Date	17/09/2019	2.0	29/08/2019	JOSE MANUEL			
Reviewed	F.LÓPEZ GARCIA	3.0	17/09/2019	JOSE MANUEL			
Drew by	JOSE MANUEL	Review	Date	Name	Review	Date	Name

7186-GIS_LSST 7186

LSST Global Safety Interlock System Design

Replaces | Replaced by

Cable overview :
=E1+GIS-PfAux-CBT0101-220W1 -
=E1+GIS-PfAux-CBT0101-220W1

Customer: EMPRESARIOS AGRUPADOS
C/Magallanes, 3
28015
3098000
http://www.empresariosagrupados.es/

= REPORT
+ GIS-PfAux-CBT0101

Cable diagram

F09_001_TK

Identificador de cable	Referencia Cable	no. of conductors	cross-section	cable length	function text
=E1+GIS-PfAux-CBT0101-220W1	YE ETH CAT6	5	1	1,5	SafetyNet-GIS_PFLOW YELOW

function text	X-Ref	ORIGEN	Pin Origen	conductor	Etiqueta Hilo	DESTINO	Pin Destino	X-Ref	function text
	/220.5	-220U1-X1		**ETH**		-500A1	-X3	/502.2	

◁ 3000 ▷

IK4 TEKNIKER Research Alliance
IK4-TEKNIKER
AVDA. OTAOLA 20
20600 Eibar (Gipuzkoa) Spain
Tfno.:(+34) 943 206744
Fax: (+34) 943 202757
Web: www.tekniker.es

Date	30/08/2022	2.0	29/08/2019	JOSE MANUEL			
Reviewed	F.LÓPEZ GARCIA	3.0	17/09/2019	JOSE MANUEL			
Drew by	JOSE MANUEL	Review	Date	Name	Review	Date	Name

7186-GIS_LSST 7186
LSST Global Safety Interlock System Design

Replaces | Replaced by

Cable diagram
=E1+GIS-PfAux-CBT0101-220W1

Customer: EMPRESARIOS AGRUPADOS
C/Magallanes, 3
28015
3098000
http://www.empresariosagrupados.es/

= REPORT
+ GIS-PfAux-CBT0101