Customer

EMPRESARIOS AGRUPADOS

EMPRESARIOS AGRUPADOS
C/Magallanes, 3
28015 MADRID
ESPAÑA
91 3098000

http://www.empresariosagrupados.es/

Project:

3151_LSST
MCS Design Electrical Schematics
LSST TELESCOPE

DOC
PROJECT DOCUMENTATION

IND
PAGE INDEX

Number of pages: 710

Made by:

IK4 TEKNIKER
Research Alliance

IK4-TEKNIKER
AVDA. OTAOLA 20
20600 Eibar (Gipuzkoa) Spain
Tfno. : (+34) 943 206744
Fax : (+34) 943 202757
Web: www.tekniker.es

Review	Review description	Date	Reviewed
2.3	VERSION INTERMEDIA PARA MONTAJE ASTURFEITO (SIN EVALUACIONES)	15/12/2017	JOSE MANUEL

Drew by: J.M.CASTAÑO

Reviewed: F.LÓPEZ

Date: 16/12/2015

Replaces:

Replaced by:

Table of contents

F06_004_TK

Assignment	Page	Page description
E1 (TMA)		TMA-AZ-CS-CBT-0001 (MAIN CONTROL CABINET (+X))
	001	Title page / cover sheet
	002	POWER
	010	AC POWER
	015	AC POWER TEMPERATURE OK
	020	DC POWER
	025	DC POWER TEMPERATURE OK
	026	24 VDC DISTRIBUTION
	030	CABINET SERVICES
	101	CABINET TEMPERATURE MODULE
	103	MOTORS BLOCK DIAGRAM
	104	MOTORS BLOCK DIAGRAM
	105	MOTORS
	106	MOTORS POWER SUPPLY
	107	MOTORS POWER SUPPLY CONTROL
	108	POWER MOTOR 1 AZIMUTH CABLE WRAP
	109	POWER MOTOR 2 AZIMUTH CABLE WRAP
	110	CONTROL MOTOR 1 AZIMUTH CABLE WRAP
	111	CONTROL MOTOR 2 AZIMUTH CABLE WRAP
	112	POWER MOTOR 1 CAMERA CABLE WRAP
	113	POWER MOTOR 2 CAMERA CABLE WRAP
	114	CONTROL MOTOR 1 CAMERA CABLE WRAP
	115	CONTROL MOTOR 2 CAMERA CABLE
	119	POWER KCU+KSM02 SYSTEM
	120	POWER KCU+KSM02 SYSTEM
	121	Mirror Cover System 1 X+
	122	BALANCING SYSTEM 1 +X
	123	BALANCING SYSTEM 2 +X
	124	MIRROR COVER LOCK 1 -Y

IK4 TEKNIKER Research Alliance
IK4-TEKNIKER
AVDA. OTAOLA 20
20600 Eibar (Gipuzkoa) Spain
Tfno.:(+34) 943 206744
Fax: (+34) 943 202757
Web: www.tekniker.es

Date	23/02/2017						
Reviewed	F.LÓPEZ	2.3	15/12/2017	JOSE MANUEL			
Drew by	jcastano	Review	Date	Name	Review	Date	Name

3151_LSST

MCS Design Electrical Schematics

LSST TELESCOPE

Replaces | Replaced by

Table of contents :
=E1+TMA-AZ-CS-CBT-0001/001 -
=E1+TMA-AZ-CS-CBT-0001/124

Customer: EMPRESARIOS AGRUPADOS
C/Magallanes, 3
28015 MADRID
91 3098000
http://www.empresariosagrupados.es/

= DOC
+ IND

Table of contents

F06_004_TK

Assignment	Page	Page description
E1 (TMA)		TMA-AZ-CS-CBT-0001 (MAIN CONTROL CABINET (+X))
	125	Mirror Cover System 2 -Y
	126	MIRROR COVER LOCK 2 -X
	127	AXIAL BALANCING SYSTEM 3 -X
	128	AXIAL BALANCING SYSTEM 4 -X
	128A	Mirror Cover System 3 -X
	128B	MIRROR COVER LOCK 3 +Y
	128C	Mirror Cover System 4 +Y
	128D	MIRROR COVER LOCK 4 +X
	129	Deployable Platform 1 +X
	130	Deployable Platform 2 +X
	131	ELEVATION LOCKING PINS 1 +X
	132	ELEVATION LOCKING PINS 2 -X
	133	Deployable Platform 3 -X
	134	Deployable Platform 4 -X
	135	AZIMUTH & ELEVATION AXIS
	136	AZIMUTH AZ01-AZ02 AXIS
	137	AZIMUTH AZ03-AZ04 AXIS
	138	AZIMUTH AZ05-AZ06 AXIS
	139	AZIMUTH AZ07-AZ08 AXIS
	140	AZIMUTH AZ09-AZ10 AXIS
	141	AZIMUTH AZ11-AZ12 AXIS
	142	AZIMUTH AZ13-AZ14 AXIS
	143	AZIMUTH AZ15-AZ16 AXIS
	150	ELEVATION AXIS EL01A -EL01B
	151	ELEVATION AXIS EL02A -EL02B
	152	ELEVATION AXIS EL03A -EL03B
	153	ELEVATION AXIS EL04A -EL04B
	154	ELEVATION AXIS EL05A -EL05B

IK4 TEKNIKER Research Alliance

IK4-TEKNIKER
AVDA. OTAOLA 20
20600 Eibar (Gipuzkoa) Spain
Tfno.:(+34) 943 206744
Fax: (+34) 943 202757
Web: www.tekniker.es

Date	23/02/2017							
Reviewed	F.LÓPEZ	2.3	15/12/2017	JOSE MANUEL				
Drew by	jcastano	Review	Date	Name	Review	Date	Name	

3151_LSST

MCS Design Electrical Schematics

LSST TELESCOPE

Replaces | Replaced by

Table of contents :
=E1+TMA-AZ-CS-CBT-0001/125 -
=E1+TMA-AZ-CS-CBT-0001/154

Customer: EMPRESARIOS AGRUPADOS
C/Magallanes, 3
28015 MADRID
91 3098000
http://www.empresariosagrupados.es/

= DOC
+ IND

Table of contents

F06_004_TK

Assignment	Page	Page description
E1 (TMA)		TMA-AZ-CS-CBT-0001 (MAIN CONTROL CABINET (+X))
	155	ELEVATION AXIS EL06A -EL06B
	201	PXI SYSTEM
	202	PXI POWER
	203	PXIe 8880 CPU
	205	PXIe ETHERNET
	206	ETHERNET SWITCH
	206.a	ETHERNET SWITCH
	207	ETHERCAT NETWORK RING 1
	208	ETHERCAT NETWORK RING 2
	209	CML CONTROL
	210	cRIO System
	211	cRIO POWER & EtherCAT
	212	Synchronization Signals
	220	DISTRIBUTED IOs
	221	DISTRIBUTED IOs POWER & ETHERCAT
	222	DISTRIBUTED DIGITAL INPUT MODULE
	223	DISTRIBUTED DIGITAL INPUT MODULE
	224	DISTRIBUTED DIGITAL INPUT MODULE
	225	DISTRIBUTED DIGITAL INPUT MODULE
	226	DISTRIBUTED DIGITAL INPUT MODULE
	227	DISTRIBUTED DIGITAL INPUT MODULE
	228	DISTRIBUTED DIGITAL OUTPUT MODULE
	229	DISTRIBUTED DIGITAL OUTPUT MODULE
	230	DISTRIBUTED DIGITAL OUTPUT MODULE
	233	DISTRIBUTED ANALOG INPUT MODULE
	234	DISTRIBUTED ANALOG INPUT MODULE
	235	DISTRIBUTED ANALOG INPUT MODULE
	236	DISTRIBUTED ANALOG INPUT MODULE

IK4 TEKNIKER Research Alliance
IK4-TEKNIKER
AVDA. OTAOLA 20
20600 Eibar (Gipuzkoa) Spain
Tfno.:(+34) 943 206744
Fax: (+34) 943 202757
Web: www.tekniker.es

Date	23/02/2017						
Reviewed	F.LÓPEZ	2.3	15/12/2017	JOSE MANUEL			
Drew by	jcastano	Review	Date	Name	Review	Date	Name

3151_LSST — MCS Design Electrical Schematics
LSST TELESCOPE
Replaces — Replaced by

Table of contents :
=E1+TMA-AZ-CS-CBT-0001/155 -
=E1+TMA-AZ-CS-CBT-0001/236

Customer: EMPRESARIOS AGRUPADOS
C/Magallanes, 3
28015 MADRID
91 3098000
http://www.empresariosagrupados.es/

= DOC
+ IND

Table of contents

F06_004_TK

Assignment	Page	Page description
E1 (TMA)		TMA-AZ-CS-CBT-0001 (MAIN CONTROL CABINET (+X))
	238	DISTRIBUTED TEMPERATURE INPUT MODULE
	239	DISTRIBUTED TEMPERATURE INPUT MODULE
	240	DISTRIBUTED TEMPERATURE INPUT MODULE
	241	DISTRIBUTED TEMPERATURE INPUT MODULE
	244	DISTRIBUTED ANALOG OUTPUT MODULE
	250	PC
	251	PC
	255	HANDHELD
	260	CABINET TEMPERATURE CONTROL
	261	CABINET TEMPERATURE CONTROL
	270	ENCODER INTERFACE
	271	ENCODER INTERFACE- SYNCHRONIZATION SIGNALS
	272	ENCODER INTERFACE- AUX. SIGNALS
	301	AZIMUTH LINEAR ENCODERS
	302	AZIMUTH LINEAR ENCODERS
	303	ELEVATION LINEAR ENCODERS
	304	ELEVATION LINEAR ENCODERS
	321	ELEVATION AXIS LIMIT SWICHES
	330	AZIMUTH CABLE WRAP LVDT
	335	AZCW+ COOLING PRESSURE SENSORS
	336	AZ DRIVERS COOLING PRESSURE SENSORS
	337	AZ DRIVERS COOLING PRESSURE SENSORS
	338	EL DRIVERS COOLING PRESSURE SENSORS
	339	MCC CABINEL & AZ PANEL COOLING PRESSURE SENSORS
	340	AZIMUTH DYNALEN TEMPERATURE
	345	AIR PRESSURE SENSORS
	350	AZCW+ TEMPERATURE PRESSURE SENSORS
	353	AZIMUTH PANEL SIGNALS

IK4 TEKNIKER Research Alliance
IK4-TEKNIKER
AVDA. OTAOLA 20
20600 Eibar (Gipuzkoa) Spain
Tfno.:(+34) 943 206744
Fax: (+34) 943 202757
Web: www.tekniker.es

Date	23/02/2017							
Reviewed	F.LÓPEZ	2.3	15/12/2017	JOSE MANUEL				
Drew by	jcastano	Review	Date	Name	Review	Date	Name	

3151_LSST
MCS Design Electrical Schematics
LSST TELESCOPE

Replaces | Replaced by

Table of contents :
=E1+TMA-AZ-CS-CBT-0001/238 -
=E1+TMA-AZ-CS-CBT-0001/353

Customer:
EMPRESARIOS AGRUPADOS
C/Magallanes, 3
28015 MADRID
91 3098000
http://www.empresariosagrupados.es/

= DOC
+ IND

Table of contents

F06_004_TK

Assignment	Page	Page description
E1 (TMA)		TMA-AZ-CS-CBT-0001 (MAIN CONTROL CABINET (+X))
	355	ELEVATION ENCODER
	500	EMERGENCY PLC PSSuniversal
	501	SAFETY NET
	502	POWER SAFETY PSS
	510	SAFETY DIGITAL INPUTS
	511	SAFETY DIGITAL INPUTS
	512	SAFETY DIGITAL INPUTS
	513	SAFETY DIGITAL INPUTS
	514	SAFETY DIGITAL INPUTS
	515	SAFETY DIGITAL INPUTS
	516	SAFETY DIGITAL INPUTS
	517	SAFETY DIGITAL INPUTS
	518	SAFETY DIGITAL INPUTS
	519	SAFETY DIGITAL INPUTS
	520	SAFETY DIGITAL INPUTS
	521	SAFETY DIGITAL INPUTS
	525	SAFETY DIGITAL OUTPUTS
	526	SAFETY DIGITAL OUTPUTS
	527	SAFETY DIGITAL OUTPUTS
	528	SAFETY DIGITAL OUTPUTS
	529	SAFETY DIGITAL OUTPUTS
	530	SAFETY DIGITAL OUTPUTS
	531	SAFETY DIGITAL OUTPUTS
	532	SAFETY DIGITAL OUTPUTS
	533	SAFETY DIGITAL OUTPUTS
	534	SAFETY DIGITAL OUTPUTS
	535	SAFETY DIGITAL OUTPUTS
	545	SAFETY COUNT INPUT

◁ 002.c

002.e ▷

Table of contents

F06_004_TK

Assignment	Page	Page description
E1 (TMA)		TMA-AZ-CS-CBT-0001 (MAIN CONTROL CABINET (+X))
	560	AZIMUTH PLATFORM ACCESS
	561	Power off Limit Switch
	562	Deployable Platform Limit Switch
	564	Elevation Limit Switch
	601	COMAND
	630	MIXING VALVES
	631	MIXING VALVES
	701	AUXILIARY BOXES POWER SUPPLY
	801	Cabinet general view
	802	Mounting plate general view
	803	Mounting plate
	804	Cable Entrance Dimensions FRONT OR BACK SIDE
	805	Cable Entrance Dimensions BOTOM
	806	Cable Entrance Dimensions RIGHT & LEFT SIDE
	807	CABINET VIEW
	808	CABINET DIMENSIONS
	809	CABINET DIMENSIONS
	810	HANDHELD AZ +X
	811	HANDHELD AZ -X
E1 (TMA)		TMA-AZ-CS-CBT-0101 (AUXILIARY AZIMUTH 1 BOX (-X))
	001	Title page / cover sheet
	020	DC POWER
	026	24 VDC DISTRIBUTION
	101	CABINET TEMPERATURE MODULE
	220	DISTRIBUTED IOs
	221	DISTRIBUTED IOs POWER & ETHERCAT
	222	DISTRIBUTED DIGITAL INPUT MODULE
	223	DISTRIBUTED DIGITAL INPUT MODULE

IK4 TEKNIKER Research Alliance
IK4-TEKNIKER
AVDA. OTAOLA 20
20600 Eibar (Gipuzkoa) Spain
Tfno.:(+34) 943 206744
Fax: (+34) 943 202757
Web: www.tekniker.es

Date	23/02/2017							
Reviewed	F.LÓPEZ	2.3	15/12/2017	JOSE MANUEL				
Drew by	jcastano	Review	Date	Name	Review	Date	Name	

3151_LSST
MCS Design Electrical Schematics
LSST TELESCOPE
Replaces
Replaced by

Table of contents :
=E1+TMA-AZ-CS-CBT-0001/560 -
=E1+TMA-AZ-CS-CBT-0101/223

Customer:
EMPRESARIOS AGRUPADOS
C/Magallanes, 3
28015 MADRID
91 3098000
http://www.empresariosagrupados.es/

= DOC
+ IND

Table of contents

F06_004_TK

Assignment	Page	Page description
E1 (TMA)		TMA-AZ-CS-CBT-0101 (AUXILIARY AZIMUTH 1 BOX (-X))
	224	DISTRIBUTED DIGITAL INPUT MODULE
	225	DISTRIBUTED DIGITAL INPUT MODULE
	226	DISTRIBUTED DIGITAL INPUT MODULE
	227	DISTRIBUTED DIGITAL INPUT MODULE
	228	DISTRIBUTED DIGITAL INPUT MODULE
	229	DISTRIBUTED DIGITAL INPUT MODULE
	230	DISTRIBUTED DIGITAL OUTPUT MODULE
	233	DISTRIBUTED ANALOG INPUT MODULE
	234	DISTRIBUTED ANALOG INPUT MODULE
	235	DISTRIBUTED ANALOG INPUT MODULE
	236	DISTRIBUTED ANALOG INPUT MODULE
	238	DISTRIBUTED TEMPERATURE INPUT MODULE
	239	DISTRIBUTED TEMPERATURE INPUT MODULE
	240	DISTRIBUTED TEMPERATURE INPUT MODULE
	241	DISTRIBUTED TEMPERATURE INPUT MODULE
	242	DISTRIBUTED TEMPERATURE INPUT MODULE
	244	DISTRIBUTED ANALOG OUTPUT MODULE
	320	AZCW- COOLING PRESSURE SENSORS
	321	PRESSURE SENSORS
	322	AZ DRIVERS COOLING PRESSURE SENSORS
	323	AZ DRIVERS COOLING PRESSURE SENSORS
	324	EL DRIVERS COOLING PRESSURE SENSORS
	325	GW EL CW COOLING PRESSURE SENSORS
	327	AIR PRESSURE SENSORS
	330	PHASE MAIN POWER CABINET SIGNALS
	331	PHASE CAPACITOR CONTROL CABINET SIGNALS
	332	PHASE CAPACITOR 1 CABINET SIGNALS
	333	PHASE CAPACITOR CABINET 2 SIGNALS

IK4-TEKNIKER
AVDA. OTAOLA 20
20600 Eibar (Gipuzkoa) Spain
Tfno.:(+34) 943 206744
Fax: (+34) 943 202757
Web: www.tekniker.es

Date	23/02/2017							
Reviewed	F.LÓPEZ	2.3	15/12/2017	JOSE MANUEL				
Drew by	jcastano	Review	Date	Name	Review	Date	Name	

3151_LSST

MCS Design Electrical Schematics

LSST TELESCOPE

Replaces | Replaced by

Table of contents :
=E1+TMA-AZ-CS-CBT-0101/224 -
=E1+TMA-AZ-CS-CBT-0101/333

Customer: EMPRESARIOS AGRUPADOS
C/Magallanes, 3
28015 MADRID
91 3098000
http://www.empresariosagrupados.es/

= DOC
+ IND

Table of contents

F06_004_TK

Assignment	Page	Page description
E1 (TMA)		TMA-AZ-CS-CBT-0101 (AUXILIARY AZIMUTH 1 BOX (-X))
	334	PHASE CAPACITOR CABINET 3 SIGNALS
	335	PHASE CAPACITOR CABINET 4 SIGNALS
	336	PHASE CAPACITOR CABINET 5 SIGNALS
	337	PHASE CAPACITOR CABINET 6 SIGNALS
	338	PHASE CAPACITOR CABINET 7 SIGNALS
	339	PHASE CAPACITOR CABINET 8 SIGNALS
	350	AZCW+ TEMPERATURE PRESSURE SENSORS
	500	EMERGENCY PLC PSSuniversal
	501	SAFETY NET
	502	POWER SAFETY PSS
	510	SAFETY DIGITAL INPUTS
	511	SAFETY DIGITAL INPUTS
	512	SAFETY DIGITAL INPUTS
	513	SAFETY DIGITAL INPUTS
	514	SAFETY DIGITAL INPUTS
	515	SAFETY DIGITAL INPUTS
	516	SAFETY DIGITAL INPUTS
	517	SAFETY DIGITAL INPUTS
	518	SAFETY DIGITAL INPUTS
	519	SAFETY DIGITAL INPUTS
	520	SAFETY DIGITAL INPUTS
	530	SAFETY DIGITAL OUTPUTS
	531	SAFETY DIGITAL OUTPUTS
	532	SAFETY DIGITAL OUTPUTS
	533	SAFETY DIGITAL OUTPUTS
	561	POWER OFF LIMIT SWITCH
	570	PHASE CAPACITOR CABINET DOOR SWITCH
	571	AZIMUTH PLATFORM ACCESS

IK4-TEKNIKER
AVDA. OTAOLA 20
20600 Eibar (Gipuzkoa) Spain
Tfno.:(+34) 943 206744
Fax: (+34) 943 202757
Web: www.tekniker.es

Date	23/02/2017						
Reviewed	F.LÓPEZ	2.3	15/12/2017	JOSE MANUEL			
Drew by	jcastano	Review	Date	Name	Review	Date	Name

3151_LSST — MCS Design Electrical Schematics
LSST TELESCOPE
Replaces — Replaced by

Table of contents :
=E1+TMA-AZ-CS-CBT-0101/334 -
=E1+TMA-AZ-CS-CBT-0101/571

Customer: EMPRESARIOS AGRUPADOS
C/Magallanes, 3
28015 MADRID
91 3098000
http://www.empresariosagrupados.es/

= DOC
+ IND

Table of contents

F06_004_TK

Assignment	Page	Page description
E1 (TMA)		TMA-AZ-CS-CBT-0101 (AUXILIARY AZIMUTH 1 BOX (-X))
	572	Deployable Platform Limit Switch
	574	Elevation Limit Switch
	630	MIXING VALVES
	631	MIXING VALVES
	701	POWER SUPPLY FROM MAIN CONTROL CABINET
	801	BOX VIEW
	802	Mounting Plate
	803	CABLE ENTRANCE DIMENSIONS
	804	CABINET DIMENSIONS
E1 (TMA)		TMA-EL-CS-CBT-0101 (AUXILIARY ELEVATION 1 BOX (+X))
	001	Title page / cover sheet
	020	DC POWER
	026	24 VDC DISTRIBUTION
	220	DISTRIBUTED IOs
	221	DISTRIBUTED IOs POWER & ETHERCAT
	222	DISTRIBUTED DIGITAL INPUT MODULE
	223	DISTRIBUTED DIGITAL INPUT MODULE
	230	DISTRIBUTED DIGITAL OUTPUT MODULE
	233	DISTRIBUTED ANALOG INPUT MODULE
	234	DISTRIBUTED ANALOG INPUT MODULE
	255	HANDHELD
	320	CAMERA CABLE WRAP LIMIT SWITCHES
	325	PINION LUBRICATION
	340	COOLING PRESSURE SENSORS
	341	COOLING PRESSURE SENSORS
	350	CCW & CHILLER TEMPERATURE PRESSURE SENSORS
	353	ELEVATION X+ PANEL
	355	AIR PRESSURE SENSORS

IK4-TEKNIKER
AVDA. OTAOLA 20
20600 Eibar (Gipuzkoa) Spain
Tfno.:(+34) 943 206744
Fax: (+34) 943 202757
Web: www.tekniker.es

Date	23/02/2017						
Reviewed	F.LÓPEZ	2.3	15/12/2017	JOSE MANUEL			
Drew by	jcastano	Review	Date	Name	Review	Date	Name

3151_LSST — MCS Design Electrical Schematics

LSST TELESCOPE

Replaces | Replaced by

Table of contents :
=E1+TMA-AZ-CS-CBT-0101/572 -
=E1+TMA-EL-CS-CBT-0101/355

Customer: EMPRESARIOS AGRUPADOS
C/Magallanes, 3
28015 MADRID
91 3098000
http://www.empresariosagrupados.es/

= DOC
+ IND

Table of contents

F06_004_TK

Assignment	Page	Page description
E1 (TMA)		TMA-EL-CS-CBT-0101 (AUXILIARY ELEVATION 1 BOX (+X))
	500	EMERGENCY PLC PSSuniversal
	501	SAFETY NET
	502	POWER SAFETY PSS
	510	SAFETY DIGITAL INPUTS
	511	SAFETY DIGITAL INPUTS
	512	SAFETY DIGITAL INPUTS
	513	SAFETY DIGITAL INPUTS
	514	SAFETY DIGITAL INPUTS
	515	SAFETY DIGITAL INPUTS
	516	SAFETY DIGITAL INPUTS
	517	SAFETY DIGITAL INPUTS
	525	SAFETY DIGITAL OUTPUTS
	561	SECURITY Limit Switch
	701	POWER SUPPLY FROM MAIN CONTROL CABINET
	801	BOX VIEW
	802	Mounting Plate
	803	CABLE ENTRANCE DIMENSIONS
	804	CABINET DIMENSIONS
	805	HANDHELD EL +X
E1 (TMA)		TMA-EL-CS-CBT-0102 (AUXILIARY ELEVATION 2 BOX (-X))
	001	Title page / cover sheet
	020	DC POWER
	026	24 VDC DISTRIBUTION
	220	DISTRIBUTED IOs
	221	DISTRIBUTED IOs POWER & ETHERCAT
	222	DISTRIBUTED DIGITAL INPUT MODULE
	223	DISTRIBUTED DIGITAL INPUT MODULE
	230	DISTRIBUTED DIGITAL OUTPUT MODULE

Table of contents

F06_004_TK

Assignment	Page	Page description
E1 (TMA)		TMA-EL-CS-CBT-0102 (AUXILIARY ELEVATION 2 BOX (-X))
	233	DISTRIBUTED ANALOG INPUT MODULE
	255	HANDHELD
	320	AZCW- COOLING PRESSURE SENSORS
	350	M1 M3 TEMPERATURE PRESSURE SENSORS
	353	ELEVATION -X PANEL
	355	AIR PRESSURE SENSORS
	500	EMERGENCY PLC PSSuniversal
	501	SAFETY NET
	502	POWER SAFETY PSS
	510	SAFETY DIGITAL INPUTS
	511	SAFETY DIGITAL INPUTS
	512	SAFETY DIGITAL INPUTS
	513	SAFETY DIGITAL INPUTS
	514	SAFETY DIGITAL INPUTS
	515	SAFETY DIGITAL INPUTS
	561	SECURITY Limit Switch
	701	POWER SUPPLY FROM MAIN CONTROL CABINET
	801	BOX VIEW
	802	Mounting Plate
	803	CABLE ENTRANCE DIMENSIONS
	804	CABINET DIMENSIONS
	805	HANDHELD EL -X
E1 (TMA)		TMA-PI-CS-CBT-0101 (AUXILIARY AZIMUTH CABLE WRAP BOX PIER)
	001	Title page / cover sheet
	020	DC POWER
	026	24 VDC DISTRIBUTION
	209	MMCS OPTICAL FIBER TO CABLE CONVERTER
	210	SKF OPTICAL FIBER TO CABLE CONVERTER

IK4 TEKNIKER Research Alliance

IK4-TEKNIKER
AVDA. OTAOLA 20
20600 Eibar (Gipuzkoa) Spain
Tfno.:(+34) 943 206744
Fax: (+34) 943 202757
Web: www.tekniker.es

Date	23/02/2017							
Reviewed	F.LÓPEZ	2.3	15/12/2017	JOSE MANUEL				
Drew by	jcastano	Review	Date	Name	Review	Date	Name	

3151_LSST

MCS Design Electrical Schematics

LSST TELESCOPE

Replaces | Replaced by

Table of contents :
=E1+TMA-EL-CS-CBT-0102/233 -
=E1+TMA-PI-CS-CBT-0101/210

Customer: EMPRESARIOS AGRUPADOS
C/Magallanes, 3
28015 MADRID
91 3098000
http://www.empresariosagrupados.es/

= DOC
+ IND

Table of contents

F06_004_TK

Assignment	Page	Page description
E1 (TMA)		TMA-PI-CS-CBT-0101 (AUXILIARY AZIMUTH CABLE WRAP BOX PIER)
	211	IS OPTICAL FIBER TO CABLE CONVERTER
	220	DISTRIBUTED IOs
	221	DISTRIBUTED IOs POWER & ETHERCAT
	222	DISTRIBUTED DIGITAL INPUT MODULE
	223	DISTRIBUTED DIGITAL INPUT MODULE
	230	DISTRIBUTED DIGITAL OUTPUT MODULE
	233	DISTRIBUTED ANALOG INPUT MODULE
	234	DISTRIBUTED ANALOG INPUT MODULE
	235	DISTRIBUTED ANALOG INPUT MODULE
	320	AZIMUTH AXIS LIMIT SWICHES
	325	PINION LUBRICATION
	327	AIR PRESSURE SENSORS
	328	SKF PRESSURE SENSORS
	335	AZCW COOLING PRESSURE SENSORS
	350	AIR COMPRESSED TEMPERATURE PRESSURE SENSORS
	351	SKF TEMPERATURE SENSORS
	352	AZCW TEMPERATURE SENSORS
	353	MAIN PANEL SIGNALS
	355	AZIMUTH ENCODER
	500	EMERGENCY PLC PSSuniversal
	501	SAFETY NET
	502	POWER SAFETY PSS
	510	SAFETY DIGITAL INPUTS
	511	SAFETY DIGITAL INPUTS
	512	SAFETY DIGITAL INPUTS
	513	SAFETY DIGITAL INPUTS
	545	SAFETY COUNT INPUT
	561	SECURITY Limit Switch

IK4 TEKNIKER Research Alliance
IK4-TEKNIKER
AVDA. OTAOLA 20
20600 Eibar (Gipuzkoa) Spain
Tfno.:(+34) 943 206744
Fax: (+34) 943 202757
Web: www.tekniker.es

Date	23/02/2017						
Reviewed	F.LÓPEZ	2.3	15/12/2017	JOSE MANUEL			
Drew by	jcastano	Review	Date	Name	Review	Date	Name

3151_LSST
MCS Design Electrical Schematics
LSST TELESCOPE
Replaces
Replaced by

Table of contents :
=E1+TMA-PI-CS-CBT-0101/211 -
=E1+TMA-PI-CS-CBT-0101/561

Customer:
EMPRESARIOS AGRUPADOS
C/Magallanes, 3
28015 MADRID
91 3098000
http://www.empresariosagrupados.es/

= DOC
+ IND

Table of contents

F06_004_TK

Assignment	Page	Page description
E1 (TMA)		TMA-PI-CS-CBT-0101 (AUXILIARY AZIMUTH CABLE WRAP BOX PIER)
	701	POWER SUPPLY FROM MAIN CONTROL CABINET
	801	BOX VIEW
	802	Mounting Plate
	803	CABLE ENTRANCE DIMENSIONS
	804	CABINET DIMENSIONS
E1 (TMA)		TMA-CCWAUX-CS-CBT-0101 (CCW AUXILIAR PORTABLE CABINET)
	001	Title page / cover sheet
	002	POWER
	020	DC POWER
	101	CABINET TEMPERATURE MODULE
	105	MOTORS
	106	MOTORS POWER SUPPLY
	107	MOTORS POWER SUPPLY CONTROL
	108	POWER MOTOR 1 AZIMUTH CABLE WRAP
	109	POWER MOTOR 2 AZIMUTH CABLE WRAP
	114	CONTROL MOTOR 1 CAMERA CABLE WRAP
	115	CONTROL MOTOR 2 CAMERA CABLE
	206	ETHERNET SWITCH
	207	NETWORK BLOCK DIAGRAM
	209	CML CONTROL
	210	CRIO SYSTEM
	211	CRIO POWER
	220	DIGITAL INPUT
	221	DIGITAL INPUT
	230	DIGITAL OUTPUT
	231	DIGITAL OUTPUT
	235	TEMPERATURE INPUTS
	255	HANDHELD

IK4-TEKNIKER
AVDA. OTAOLA 20
20600 Eibar (Gipuzkoa) Spain
Tfno.:(+34) 943 206744
Fax: (+34) 943 202757
Web: www.tekniker.es

Date	23/02/2017						
Reviewed	F.LÓPEZ	2.3	15/12/2017	JOSE MANUEL			
Drew by	jcastano	Review	Date	Name	Review	Date	Name

3151_LSST — MCS Design Electrical Schematics

LSST TELESCOPE

Replaces | Replaced by

Table of contents :
=E1+TMA-PI-CS-CBT-0101/701 -
=E1+TMA-CCWAUX-CS-CBT-0101/255

Customer: EMPRESARIOS AGRUPADOS
C/Magallanes, 3
28015 MADRID
91 3098000
http://www.empresariosagrupados.es/

= DOC
+ IND

Table of contents

F06_004_TK

Assignment	Page	Page description
E1 (TMA)		TMA-CCWAUX-CS-CBT-0101 (CCW AUXILIAR PORTABLE CABINET)
	320	CAMERA CABLE WRAP LIMIT SWITCHES
	325	PINION LUBRICATION
	500	EMERGENCY CIRCUIT
	510	SAFETY DIGITAL INPUT
	511	SAFETY DIGITAL INPUT
	512	SAFETY DIGITAL INPUT
	520	SAFETY DIGITAL OUTPUT
	521	SAFETY DIGITAL OUTPUT
	601	COMAND
	701	FACILITIES INTERFACE
	801	CABINET VIEW
	802	MOUNTING PLATE
REPORT (LISTADOS)		TMA-AZ-CS-CBT-0001 (MAIN CONTROL CABINET (+X))
	001	Title page / cover sheet
	002	Parts list : NI.PXIe 8880 - PILZ.314 200
	003	Parts list : PILZ.314 601 - PXC.1405879
	004	Parts list : HEI.AK-ERA-8980C - PXC.2800929
	005	Parts list : PXC.3030255 - PXC.2961105
	006	Parts list : PXC.2900958 - RIT.4127.010
	007	Parts list : RIT.4127.010 - UNEX.80.60.77
	008	Parts list : UNEX.80.60.77 - BLB.C6PC70S-WH-7
	009	Parts list : BLB.C6PC70S-WH-10 - PXC.3209510
	010	Parts list : PXC.3209510 - PXC.3209510
	011	Parts list : PXC.3214356 - PXC.3208100
	012	Parts list : PXC.3209510 - PXC.3208100
	013	Parts list : PXC.3208100 - PXC.3208100
	014	Parts list : PXC.3208100 - PXC.3213014
	015	Parts list : PXC.3208100 - PXC.3213713

◁ 002.l

002.n ▷

Table of contents

F06_004_TK

Assignment	Page	Page description
REPORT (LISTADOS)		TMA-AZ-CS-CBT-0001 (MAIN CONTROL CABINET (+X))
	016	Parts list : PXC.3213713 - SIE.SAX61-03
	2002	Terminal diagram =E1+TMA-AZ-CS-CBT-0001-X1
	2002.a	Terminal diagram =E1+TMA-AZ-CS-CBT-0001-X1
	2003	Terminal diagram =E1+TMA-AZ-CS-CBT-0001-X2
	2004	Terminal diagram =E1+TMA-AZ-CS-CBT-0001-X10
	2004.a	Terminal diagram =E1+TMA-AZ-CS-CBT-0001-X10
	2004.b	Terminal diagram =E1+TMA-AZ-CS-CBT-0001-X10
	2004.c	Terminal diagram =E1+TMA-AZ-CS-CBT-0001-X10
	2005	Terminal diagram =E1+TMA-AZ-CS-CBT-0001-X11
	2006	Terminal diagram =E1+TMA-AZ-CS-CBT-0001-X12
	2006.a	Terminal diagram =E1+TMA-AZ-CS-CBT-0001-X12
	2006.b	Terminal diagram =E1+TMA-AZ-CS-CBT-0001-X12
	2006.c	Terminal diagram =E1+TMA-AZ-CS-CBT-0001-X12
	2006.d	Terminal diagram =E1+TMA-AZ-CS-CBT-0001-X12
	2007	Terminal diagram =E1+TMA-AZ-CS-CBT-0001-X13
	2008	Terminal diagram =E1+TMA-AZ-CS-CBT-0001-X30
	3001	Cable diagram =E1+TMA-AZ-CS-CBT-0001-128AW2
	3002	Cable diagram =E1+TMA-AZ-CS-CBT-0001-128BW2
	3003	Cable diagram =E1+TMA-AZ-CS-CBT-0001-128CW2
	3004	Cable diagram =E1+TMA-AZ-CS-CBT-0001-128DW2
	3005	Cable diagram =E1+TMA-AZ-CS-CBT-0001-030W1
	3006	Cable diagram =E1+TMA-AZ-CS-CBT-0001-030W2
	3007	Cable diagram =E1+TMA-AZ-CS-CBT-0001-101W1
	3008	Cable diagram =E1+TMA-AZ-CS-CBT-0001-101W2
	3009	Cable diagram =E1+TMA-AZ-CS-CBT-0001-106W1
	3010	Cable diagram =E1+TMA-AZ-CS-CBT-0001-106W2
	3011	Cable diagram =E1+TMA-AZ-CS-CBT-0001-108W3
	3012	Cable diagram =E1+TMA-AZ-CS-CBT-0001-108W4

IK4 TEKNIKER Research Alliance
IK4-TEKNIKER
AVDA. OTAOLA 20
20600 Eibar (Gipuzkoa) Spain
Tfno.:(+34) 943 206744
Fax: (+34) 943 202757
Web: www.tekniker.es

Date	23/02/2017							
Reviewed	F.LÓPEZ	2.3	15/12/2017	JOSE MANUEL				
Drew by	jcastano	Review	Date	Name	Review	Date	Name	

3151_LSST — MCS Design Electrical Schematics
LSST TELESCOPE
Replaces — Replaced by

Table of contents :
=REPORT+TMA-AZ-CS-CBT-0001/016 -
=REPORT+TMA-AZ-CS-CBT-0001/3012

Customer: EMPRESARIOS AGRUPADOS
C/Magallanes, 3
28015 MADRID
91 3098000
http://www.empresariosagrupados.es/

= DOC
+ IND

Table of contents

F06_004_TK

Assignment	Page	Page description
REPORT (LISTADOS)		TMA-AZ-CS-CBT-0001 (MAIN CONTROL CABINET (+X))
	3013	Cable diagram =E1+TMA-AZ-CS-CBT-0001-112W3
	3014	Cable diagram =E1+TMA-AZ-CS-CBT-0001-112W4
	3015	Cable diagram =E1+TMA-AZ-CS-CBT-0001-119W2
	3016	Cable diagram =E1+TMA-AZ-CS-CBT-0001-121W2
	3017	Cable diagram =E1+TMA-AZ-CS-CBT-0001-124W2
	3018	Cable diagram =E1+TMA-AZ-CS-CBT-0001-125W2
	3019	Cable diagram =E1+TMA-AZ-CS-CBT-0001-126W2
	3020	Cable diagram =E1+TMA-AZ-CS-CBT-0001-202W1
	3021	Cable diagram =E1+TMA-AZ-CS-CBT-0001-202W2
	3022	Cable diagram =E1+TMA-AZ-CS-CBT-0001-205W1
	3023	Cable diagram =E1+TMA-AZ-CS-CBT-0001-205W2
	3024	Cable diagram =E1+TMA-AZ-CS-CBT-0001-205W3
	3025	Cable diagram =E1+TMA-AZ-CS-CBT-0001-205W4
	3026	Cable diagram =E1+TMA-AZ-CS-CBT-0001-206W1
	3027	Cable diagram =E1+TMA-AZ-CS-CBT-0001-206W2
	3028	Cable diagram =E1+TMA-AZ-CS-CBT-0001-206W3
	3029	Cable diagram =E1+TMA-AZ-CS-CBT-0001-206W5
	3030	Cable diagram =E1+TMA-AZ-CS-CBT-0001-209W1
	3031	Cable diagram =E1+TMA-AZ-CS-CBT-0001-211W1
	3032	Cable diagram =E1+TMA-AZ-CS-CBT-0001-212W2
	3033	Cable diagram =E1+TMA-AZ-CS-CBT-0001-212W3
	3034	Cable diagram =E1+TMA-AZ-CS-CBT-0001-233W1
	3035	Cable diagram =E1+TMA-AZ-CS-CBT-0001-233W2
	3036	Cable diagram =E1+TMA-AZ-CS-CBT-0001-233W3
	3037	Cable diagram =E1+TMA-AZ-CS-CBT-0001-233W4
	3038	Cable diagram =E1+TMA-AZ-CS-CBT-0001-233W5
	3039	Cable diagram =E1+TMA-AZ-CS-CBT-0001-233W6
	3040	Cable diagram =E1+TMA-AZ-CS-CBT-0001-233W8

◁ 002.n

002.p ▷

Table of contents

F06_004_TK

Assignment	Page	Page description
REPORT (LISTADOS)		TMA-AZ-CS-CBT-0001 (MAIN CONTROL CABINET (+X))
	3041	Cable diagram =E1+TMA-AZ-CS-CBT-0001-234W1
	3042	Cable diagram =E1+TMA-AZ-CS-CBT-0001-234W2
	3043	Cable diagram =E1+TMA-AZ-CS-CBT-0001-234W3
	3044	Cable diagram =E1+TMA-AZ-CS-CBT-0001-234W4
	3045	Cable diagram =E1+TMA-AZ-CS-CBT-0001-234W7
	3046	Cable diagram =E1+TMA-AZ-CS-CBT-0001-234W8
	3047	Cable diagram =E1+TMA-AZ-CS-CBT-0001-235W1
	3048	Cable diagram =E1+TMA-AZ-CS-CBT-0001-235W2
	3049	Cable diagram =E1+TMA-AZ-CS-CBT-0001-235W8
	3050	Cable diagram =E1+TMA-AZ-CS-CBT-0001-236W1
	3051	Cable diagram =E1+TMA-AZ-CS-CBT-0001-236W2
	3052	Cable diagram =E1+TMA-AZ-CS-CBT-0001-236W3
	3053	Cable diagram =E1+TMA-AZ-CS-CBT-0001-236W4
	3054	Cable diagram =E1+TMA-AZ-CS-CBT-0001-236W7
	3055	Cable diagram =E1+TMA-AZ-CS-CBT-0001-236W8
	3056	Cable diagram =E1+TMA-AZ-CS-CBT-0001-244W1
	3057	Cable diagram =E1+TMA-AZ-CS-CBT-0001-244W2
	3058	Cable diagram =E1+TMA-AZ-CS-CBT-0001-244W3
	3059	Cable diagram =E1+TMA-AZ-CS-CBT-0001-260W1
	3060	Cable diagram =E1+TMA-AZ-CS-CBT-0001-271W1
	3061	Cable diagram =E1+TMA-AZ-CS-CBT-0001-501W2
REPORT (LISTADOS)		TMA-AZ-CS-CBT-0101 (AUXILIARY AZIMUTH 1 BOX (-X))
	001	Title page / cover sheet
	002	Parts list : PXC.2688899 - PILZ.314 601
	003	Parts list : PILZ.314 200 - PXC.0404428
	004	Parts list : PXC.0402174 - HELU.49839
	005	Parts list : HELU.49839 - PXC.3208100
	006	Parts list : PXC.3209510 - PXC.3209510

IK4 TEKNIKER Research Alliance
IK4-TEKNIKER
AVDA. OTAOLA 20
20600 Eibar (Gipuzkoa) Spain
Tfno.:(+34) 943 206744
Fax: (+34) 943 202757
Web: www.tekniker.es

Date	23/02/2017							
Reviewed	F.LÓPEZ	2.3	15/12/2017	JOSE MANUEL				
Drew by	jcastano	Review	Date	Name	Review	Date	Name	

3151_LSST — MCS Design Electrical Schematics
LSST TELESCOPE
Replaces | Replaced by

Table of contents :
=REPORT+TMA-AZ-CS-CBT-0001/3041 -
=REPORT+TMA-AZ-CS-CBT-0101/006

Customer: EMPRESARIOS AGRUPADOS
C/Magallanes, 3
28015 MADRID
91 3098000
http://www.empresariosagrupados.es/

= DOC
+ IND

Table of contents

F06_004_TK

Assignment	Page	Page description
REPORT (LISTADOS)		TMA-AZ-CS-CBT-0101 (AUXILIARY AZIMUTH 1 BOX (-X))
	007	Parts list : PXC.3030161 - PXC.3208100
	008	Parts list : PXC.3208100 - SIE.SAX61-03
	2001	Terminal diagram =E1+TMA-AZ-CS-CBT-0101-X1
	2001.a	Terminal diagram =E1+TMA-AZ-CS-CBT-0101-X1
	2002	Terminal diagram =E1+TMA-AZ-CS-CBT-0101-X10
	2002.a	Terminal diagram =E1+TMA-AZ-CS-CBT-0101-X10
	2002.b	Terminal diagram =E1+TMA-AZ-CS-CBT-0101-X10
	2003	Terminal diagram =E1+TMA-AZ-CS-CBT-0101-X12
	2003.a	Terminal diagram =E1+TMA-AZ-CS-CBT-0101-X12
	2003.b	Terminal diagram =E1+TMA-AZ-CS-CBT-0101-X12
	2003.c	Terminal diagram =E1+TMA-AZ-CS-CBT-0101-X12
	2003.d	Terminal diagram =E1+TMA-AZ-CS-CBT-0101-X12
	3001	Cable diagram =E1+TMA-AZ-CS-CBT-0101-101W1
	3002	Cable diagram =E1+TMA-AZ-CS-CBT-0101-101W2
	3003	Cable diagram =E1+TMA-AZ-CS-CBT-0101-221W1
	3004	Cable diagram =E1+TMA-AZ-CS-CBT-0101-235W1
	3005	Cable diagram =E1+TMA-AZ-CS-CBT-0101-244W1
	3006	Cable diagram =E1+TMA-AZ-CS-CBT-0101-244W2
	3007	Cable diagram =E1+TMA-AZ-CS-CBT-0101-244W3
	3008	Cable diagram =E1+TMA-AZ-CS-CBT-0101-244W4
	3009	Cable diagram =E1+TMA-AZ-CS-CBT-0101-320W1
	3010	Cable diagram =E1+TMA-AZ-CS-CBT-0101-320W2
	3011	Cable diagram =E1+TMA-AZ-CS-CBT-0101-321W1
	3012	Cable diagram =E1+TMA-AZ-CS-CBT-0101-321W2
	3013	Cable diagram =E1+TMA-AZ-CS-CBT-0101-321W3
	3014	Cable diagram =E1+TMA-AZ-CS-CBT-0101-322W1
	3015	Cable diagram =E1+TMA-AZ-CS-CBT-0101-322W2
	3016	Cable diagram =E1+TMA-AZ-CS-CBT-0101-322W3

IK4 TEKNIKER Research Alliance

IK4-TEKNIKER
AVDA. OTAOLA 20
20600 Eibar (Gipuzkoa) Spain
Tfno.:(+34) 943 206744
Fax: (+34) 943 202757
Web: www.tekniker.es

Date	23/02/2017							
Reviewed	F.LÓPEZ	2.3	15/12/2017	JOSE MANUEL				
Drew by	jcastano	Review	Date	Name	Review	Date	Name	

3151_LSST — MCS Design Electrical Schematics

LSST TELESCOPE

Replaces | Replaced by

Table of contents :
=REPORT+TMA-AZ-CS-CBT-0101/007 -
=REPORT+TMA-AZ-CS-CBT-0101/3016

Customer: EMPRESARIOS AGRUPADOS
C/Magallanes, 3
28015 MADRID
91 3098000
http://www.empresariosagrupados.es/

= DOC
+ IND

Table of contents

F06_004_TK

Assignment	Page	Page description
REPORT (LISTADOS)		TMA-AZ-CS-CBT-0101 (AUXILIARY AZIMUTH 1 BOX (-X))
	3017	Cable diagram =E1+TMA-AZ-CS-CBT-0101-323W1
	3018	Cable diagram =E1+TMA-AZ-CS-CBT-0101-323W2
	3019	Cable diagram =E1+TMA-AZ-CS-CBT-0101-323W3
	3020	Cable diagram =E1+TMA-AZ-CS-CBT-0101-323W4
	3021	Cable diagram =E1+TMA-AZ-CS-CBT-0101-324W1
	3022	Cable diagram =E1+TMA-AZ-CS-CBT-0101-324W2
	3023	Cable diagram =E1+TMA-AZ-CS-CBT-0101-324W3
	3024	Cable diagram =E1+TMA-AZ-CS-CBT-0101-325W1
	3025	Cable diagram =E1+TMA-AZ-CS-CBT-0101-325W2
	3026	Cable diagram =E1+TMA-AZ-CS-CBT-0101-327W1
	3027	Cable diagram =E1+TMA-AZ-CS-CBT-0101-350W1
	3028	Cable diagram =E1+TMA-AZ-CS-CBT-0101-350W2
	3029	Cable diagram =E1+TMA-AZ-CS-CBT-0101-630W2
	3030	Cable diagram =E1+TMA-AZ-CS-CBT-0101-630W4
	3031	Cable diagram =E1+TMA-AZ-CS-CBT-0101-631W2
REPORT (LISTADOS)		TMA-EL-CS-CBT-0101 (AUXILIARY ELEVATION 1 BOX (+X))
	001	Title page / cover sheet
	2	Parts list : PXC.2688899 - PXC.2961105
	3	Parts list : ERI.550220 - HELU.49839
	4	Parts list : HELU.49839 - PXC.3213027
	5	Parts list : PXC.3208100 - PXC.3208100
	6	Parts list : PXC.3208100 - INT.A ST A 163 MS 06 73 0100 000
	2001	Terminal diagram =E1+TMA-EL-CS-CBT-0101-X1
	2002	Terminal diagram =E1+TMA-EL-CS-CBT-0101-X10
	2002.a	Terminal diagram =E1+TMA-EL-CS-CBT-0101-X10
	2003	Terminal diagram =E1+TMA-EL-CS-CBT-0101-X12
	2003.a	Terminal diagram =E1+TMA-EL-CS-CBT-0101-X12
	2003.b	Terminal diagram =E1+TMA-EL-CS-CBT-0101-X12

IK4 TEKNIKER Research Alliance

IK4-TEKNIKER
AVDA. OTAOLA 20
20600 Eibar (Gipuzkoa) Spain
Tfno.:(+34) 943 206744
Fax: (+34) 943 202757
Web: www.tekniker.es

Date	23/02/2017							
Reviewed	F.LÓPEZ	2.3	15/12/2017	JOSE MANUEL				
Drew by	jcastano	Review	Date	Name	Review	Date	Name	

3151_LSST — MCS Design Electrical Schematics

LSST TELESCOPE

Replaces | Replaced by

Table of contents :
=REPORT+TMA-AZ-CS-CBT-0101/3017 -
=REPORT+TMA-EL-CS-CBT-0101/2003.b

Customer: EMPRESARIOS AGRUPADOS
C/Magallanes, 3
28015 MADRID
91 3098000
http://www.empresariosagrupados.es/

= DOC
+ IND

Table of contents

F06_004_TK

Assignment	Page	Page description
REPORT (LISTADOS)		TMA-EL-CS-CBT-0101 (AUXILIARY ELEVATION 1 BOX (+X))
	3001	Cable diagram =E1+TMA-EL-CS-CBT-0101-320W1
	3002	Cable diagram =E1+TMA-EL-CS-CBT-0101-320W2
	3003	Cable diagram =E1+TMA-EL-CS-CBT-0101-320W3
	3004	Cable diagram =E1+TMA-EL-CS-CBT-0101-320W4
	3005	Cable diagram =E1+TMA-EL-CS-CBT-0101-320W5A
	3006	Cable diagram =E1+TMA-EL-CS-CBT-0101-325W1
	3007	Cable diagram =E1+TMA-EL-CS-CBT-0101-325W2
	3008	Cable diagram =E1+TMA-EL-CS-CBT-0101-325W4
	3009	Cable diagram =E1+TMA-EL-CS-CBT-0101-325W6
	3010	Cable diagram =E1+TMA-EL-CS-CBT-0101-340W1
	3011	Cable diagram =E1+TMA-EL-CS-CBT-0101-340W2
	3012	Cable diagram =E1+TMA-EL-CS-CBT-0101-340W3
	3013	Cable diagram =E1+TMA-EL-CS-CBT-0101-340W4
	3014	Cable diagram =E1+TMA-EL-CS-CBT-0101-341W1
	3015	Cable diagram =E1+TMA-EL-CS-CBT-0101-341W2
	3016	Cable diagram =E1+TMA-EL-CS-CBT-0101-350W1
	3017	Cable diagram =E1+TMA-EL-CS-CBT-0101-350W2
	3018	Cable diagram =E1+TMA-EL-CS-CBT-0101-355W1
REPORT (LISTADOS)		TMA-EL-CS-CBT-0102 (AUXILIARY ELEVATION 2 BOX (-X))
	001	Title page / cover sheet
	2	Parts list : PXC.2688899 - PXC.0404428
	3	Parts list : PXC.0402174 - PXC.3208100
	4	Parts list : PXC.3208100 - PXC.3208100
	5	Parts list : PXC.3208100 - PXC.3213713
	2001	Terminal diagram =E1+TMA-EL-CS-CBT-0102-X1
	2002	Terminal diagram =E1+TMA-EL-CS-CBT-0102-X10
	2003	Terminal diagram =E1+TMA-EL-CS-CBT-0102-X12
	2003.a	Terminal diagram =E1+TMA-EL-CS-CBT-0102-X12

IK4 TEKNIKER Research Alliance
IK4-TEKNIKER
AVDA. OTAOLA 20
20600 Eibar (Gipuzkoa) Spain
Tfno.:(+34) 943 206744
Fax: (+34) 943 202757
Web: www.tekniker.es

Date	23/02/2017							
Reviewed	F.LÓPEZ	2.3	15/12/2017	JOSE MANUEL				
Drew by	jcastano	Review	Date	Name	Review	Date	Name	

3151_LSST — MCS Design Electrical Schematics
LSST TELESCOPE
Replaces — Replaced by

Table of contents :
=REPORT+TMA-EL-CS-CBT-0101/3001 -
=REPORT+TMA-EL-CS-CBT-0102/2003.a

Customer: EMPRESARIOS AGRUPADOS
C/Magallanes, 3
28015 MADRID
91 3098000
http://www.empresariosagrupados.es/

= DOC
+ IND

Table of contents

F06_004_TK

Assignment	Page	Page description
REPORT (LISTADOS)		TMA-EL-CS-CBT-0102 (AUXILIARY ELEVATION 2 BOX (-X))
	3001	Cable diagram =E1+TMA-EL-CS-CBT-0102-320W1
	3002	Cable diagram =E1+TMA-EL-CS-CBT-0102-320W2
	3003	Cable diagram =E1+TMA-EL-CS-CBT-0102-320W3
	3004	Cable diagram =E1+TMA-EL-CS-CBT-0102-320W4
	3005	Cable diagram =E1+TMA-EL-CS-CBT-0102-350W1
	3006	Cable diagram =E1+TMA-EL-CS-CBT-0102-355W1
REPORT (LISTADOS)		TMA-PI-CS-CBT-0101 (AUXILIARY AZIMUTH CABLE WRAP BOX PIER)
	001	Title page / cover sheet
	2	Parts list : PXC.2688899 - PXC.0404428
	3	Parts list : PXC.0402174 - PXC.3214356
	4	Parts list : PXC.3209510 - PXC.3209510
	5	Parts list : PXC.3209510 - PXC.3213713
	6	Parts list : PXC.3213713 - PXC.3208100
	2001	Terminal diagram =E1+TMA-PI-CS-CBT-0101-X1
	2002	Terminal diagram =E1+TMA-PI-CS-CBT-0101-X10
	2003	Terminal diagram =E1+TMA-PI-CS-CBT-0101-X12
	2003.a	Terminal diagram =E1+TMA-PI-CS-CBT-0101-X12
	2003.b	Terminal diagram =E1+TMA-PI-CS-CBT-0101-X12
	2004	Terminal diagram =E1+TMA-PI-CS-CBT-0101-X13
	3001	Cable diagram =E1+TMA-PI-CS-CBT-0101-235W1
	3002	Cable diagram =E1+TMA-PI-CS-CBT-0101-325W1
	3003	Cable diagram =E1+TMA-PI-CS-CBT-0101-325W2
	3004	Cable diagram =E1+TMA-PI-CS-CBT-0101-325W3
	3005	Cable diagram =E1+TMA-PI-CS-CBT-0101-325W4
	3006	Cable diagram =E1+TMA-PI-CS-CBT-0101-325W5
	3007	Cable diagram =E1+TMA-PI-CS-CBT-0101-325W6
	3008	Cable diagram =E1+TMA-PI-CS-CBT-0101-327W1
	3009	Cable diagram =E1+TMA-PI-CS-CBT-0101-327W2

IK4 TEKNIKER Research Alliance

IK4-TEKNIKER
AVDA. OTAOLA 20
20600 Eibar (Gipuzkoa) Spain
Tfno.:(+34) 943 206744
Fax: (+34) 943 202757
Web: www.tekniker.es

Date	23/02/2017						
Reviewed	F.LÓPEZ	2.3	15/12/2017	JOSE MANUEL			
Drew by	jcastano	Review	Date	Name	Review	Date	Name

3151_LSST — MCS Design Electrical Schematics

LSST TELESCOPE

Replaces | Replaced by

Table of contents :
=REPORT+TMA-EL-CS-CBT-0102/3001 -
=REPORT+TMA-PI-CS-CBT-0101/3009

Customer: EMPRESARIOS AGRUPADOS
C/Magallanes, 3
28015 MADRID
91 3098000
http://www.empresariosagrupados.es/

= DOC
+ IND

Table of contents

F06_004_TK

Assignment	Page	Page description
REPORT (LISTADOS)		TMA-PI-CS-CBT-0101 (AUXILIARY AZIMUTH CABLE WRAP BOX PIER)
	3010	Cable diagram =E1+TMA-PI-CS-CBT-0101-328W1
	3011	Cable diagram =E1+TMA-PI-CS-CBT-0101-328W2
	3012	Cable diagram =E1+TMA-PI-CS-CBT-0101-335W1
	3013	Cable diagram =E1+TMA-PI-CS-CBT-0101-335W2
	3014	Cable diagram =E1+TMA-PI-CS-CBT-0101-350W1
	3015	Cable diagram =E1+TMA-PI-CS-CBT-0101-350W2
	3016	Cable diagram =E1+TMA-PI-CS-CBT-0101-351W1
	3017	Cable diagram =E1+TMA-PI-CS-CBT-0101-351W2
	3018	Cable diagram =E1+TMA-PI-CS-CBT-0101-352W1
	3019	Cable diagram =E1+TMA-PI-CS-CBT-0101-352W2
	3020	Cable diagram =E1+TMA-PI-CS-CBT-0101-501W1
REPORT (LISTADOS)		TMA-CCWAUX-CS-CBT-0101 (CCW AUXILIAR PORTABLE CABINET)
	001	Title page / cover sheet
	002	Parts list : CIS.IE-3000-8TC - BOS.R911337619
	003	Parts list : BOS.MKS070C-0300-NN-M2-UG1-RNNN - BLB.C6PC70S-BL-07
	004	Parts list : BLB.C6PC70S-BL-03 - PXC.3213056
	005	Parts list : PXC.3208100 - INT.A ST A 070 MS 19 39 0035 000
	2000	Terminal diagram =E1+TMA-CCWAUX-CS-CBT-0101-X1
	2000.a	Terminal diagram =E1+TMA-CCWAUX-CS-CBT-0101-X1
	2001	Terminal diagram =E1+TMA-CCWAUX-CS-CBT-0101-X11
	2002	Terminal diagram =E1+TMA-CCWAUX-CS-CBT-0101-X30
	3001	Cable diagram =E1+TMA-CCWAUX-CS-CBT-0101-106W1
	3002	Cable diagram =E1+TMA-CCWAUX-CS-CBT-0101-108W1
	3003	Cable diagram =E1+TMA-CCWAUX-CS-CBT-0101-108W2
	3004	Cable diagram =E1+TMA-CCWAUX-CS-CBT-0101-108W3
	3005	Cable diagram =E1+TMA-CCWAUX-CS-CBT-0101-108W4
	3006	Cable diagram =E1+TMA-CCWAUX-CS-CBT-0101-108W5
	3007	Cable diagram =E1+TMA-CCWAUX-CS-CBT-0101-109W1

IK4 TEKNIKER Research Alliance

IK4-TEKNIKER
AVDA. OTAOLA 20
20600 Eibar (Gipuzkoa) Spain
Tfno.:(+34) 943 206744
Fax: (+34) 943 202757
Web: www.tekniker.es

Date	23/02/2017						
Reviewed	F.LÓPEZ	2.3	15/12/2017	JOSE MANUEL			
Drew by	jcastano	Review	Date	Name	Review	Date	Name

3151_LSST — MCS Design Electrical Schematics

LSST TELESCOPE

Replaces | Replaced by

Table of contents :
=REPORT+TMA-PI-CS-CBT-0101/3010 -
=REPORT+TMA-CCWAUX-CS-CBT-0101/3007

Customer: EMPRESARIOS AGRUPADOS
C/Magallanes, 3
28015 MADRID
91 3098000
http://www.empresariosagrupados.es/

= DOC
+ IND

Table of contents

F06_004_TK

Assignment	Page	Page description
REPORT (LISTADOS)		TMA-CCWAUX-CS-CBT-0101 (CCW AUXILIAR PORTABLE CABINET)
	3008	Cable diagram =E1+TMA-CCWAUX-CS-CBT-0101-109W2
	3009	Cable diagram =E1+TMA-CCWAUX-CS-CBT-0101-109W3
	3010	Cable diagram =E1+TMA-CCWAUX-CS-CBT-0101-109W4
	3011	Cable diagram =E1+TMA-CCWAUX-CS-CBT-0101-206W1
	3012	Cable diagram =E1+TMA-CCWAUX-CS-CBT-0101-206W2
	3013	Cable diagram =E1+TMA-CCWAUX-CS-CBT-0101-206W3
	3014	Cable diagram =E1+TMA-CCWAUX-CS-CBT-0101-209W1
	3015	Cable diagram =E1+TMA-CCWAUX-CS-CBT-0101-209W2
	3016	Cable diagram =E1+TMA-CCWAUX-CS-CBT-0101-320W1
	3017	Cable diagram =E1+TMA-CCWAUX-CS-CBT-0101-320W2
	3018	Cable diagram =E1+TMA-CCWAUX-CS-CBT-0101-320W3
	3019	Cable diagram =E1+TMA-CCWAUX-CS-CBT-0101-320W4
	3020	Cable diagram =E1+TMA-CCWAUX-CS-CBT-0101-320W5A
	3021	Cable diagram =E1+TMA-CCWAUX-CS-CBT-0101-320W7
	3022	Cable diagram =E1+TMA-CCWAUX-CS-CBT-0101-325W1
	3023	Cable diagram =E1+TMA-CCWAUX-CS-CBT-0101-325W2
	3024	Cable diagram =E1+TMA-CCWAUX-CS-CBT-0101-325W4
	3025	Cable diagram =E1+TMA-CCWAUX-CS-CBT-0101-325W6
REPORT (LISTADOS)		TMA_E (EXTRUCTURA TELESCOPIO)
	001	Title page / cover sheet
	3001	Cable diagram =E1+TMA_E-128AW1
	3002	Cable diagram =E1+TMA_E-128BW1
	3003	Cable diagram =E1+TMA_E-128CW1
	3004	Cable diagram =E1+TMA_E-128DW1
	3005	Cable diagram =E1+TMA_E-108W1
	3006	Cable diagram =E1+TMA_E-108W1A
	3007	Cable diagram =E1+TMA_E-108W2
	3008	Cable diagram =E1+TMA_E-108W2A

IK4 TEKNIKER Research Alliance

IK4-TEKNIKER
AVDA. OTAOLA 20
20600 Eibar (Gipuzkoa) Spain
Tfno.:(+34) 943 206744
Fax: (+34) 943 202757
Web: www.tekniker.es

Date	23/02/2017							
Reviewed	F.LÓPEZ	2.3	15/12/2017	JOSE MANUEL				
Drew by	jcastano	Review	Date	Name	Review	Date	Name	

3151_LSST — MCS Design Electrical Schematics

LSST TELESCOPE

Replaces | Replaced by

Table of contents :
=REPORT+TMA-CCWAUX-CS-CBT-0101/3008
- =REPORT+TMA_E/3008

Customer: EMPRESARIOS AGRUPADOS
C/Magallanes, 3
28015 MADRID
91 3098000
http://www.empresariosagrupados.es/

= DOC
+ IND

Table of contents

F06_004_TK

Assignment	Page	Page description
REPORT (LISTADOS)		TMA_E (EXTRUCTURA TELESCOPIO)
	3009	Cable diagram =E1+TMA_E-109W1
	3010	Cable diagram =E1+TMA_E-109W1A
	3011	Cable diagram =E1+TMA_E-109W2
	3012	Cable diagram =E1+TMA_E-109W2A
	3013	Cable diagram =E1+TMA_E-112W1
	3014	Cable diagram =E1+TMA_E-112W1A
	3015	Cable diagram =E1+TMA_E-112W2
	3016	Cable diagram =E1+TMA_E-112W2A
	3017	Cable diagram =E1+TMA_E-113W1
	3018	Cable diagram =E1+TMA_E-113W1A
	3019	Cable diagram =E1+TMA_E-113W2
	3020	Cable diagram =E1+TMA_E-113W2A
	3021	Cable diagram =E1+TMA_E-119W1
	3022	Cable diagram =E1+TMA_E-119W1A
	3023	Cable diagram =E1+TMA_E-120W1
	3024	Cable diagram =E1+TMA_E-121W1
	3025	Cable diagram =E1+TMA_E-122W1
	3026	Cable diagram =E1+TMA_E-122W2
	3027	Cable diagram =E1+TMA_E-122W3
	3028	Cable diagram =E1+TMA_E-123W1
	3029	Cable diagram =E1+TMA_E-123W2
	3030	Cable diagram =E1+TMA_E-123W3
	3031	Cable diagram =E1+TMA_E-124W1
	3032	Cable diagram =E1+TMA_E-125W1
	3033	Cable diagram =E1+TMA_E-126W1
	3034	Cable diagram =E1+TMA_E-127W1
	3035	Cable diagram =E1+TMA_E-127W2
	3036	Cable diagram =E1+TMA_E-127W3

IK4-TEKNIKER
AVDA. OTAOLA 20
20600 Eibar (Gipuzkoa) Spain
Tfno.:(+34) 943 206744
Fax: (+34) 943 202757
Web: www.tekniker.es

Date	23/02/2017						
Reviewed	F.LÓPEZ	2.3	15/12/2017	JOSE MANUEL			
Drew by	jcastano	Review	Date	Name	Review	Date	Name

3151_LSST — MCS Design Electrical Schematics
LSST TELESCOPE

Replaces | Replaced by

Table of contents :
=REPORT+TMA_E/3009 -
=REPORT+TMA_E/3036

Customer: EMPRESARIOS AGRUPADOS
C/Magallanes, 3
28015 MADRID
91 3098000
http://www.empresariosagrupados.es/

= DOC
+ IND

Table of contents

F06_004_TK

Assignment	Page	Page description
REPORT (LISTADOS)		TMA_E (EXTRUCTURA TELESCOPIO)
	3037	Cable diagram =E1+TMA_E-128W1
	3038	Cable diagram =E1+TMA_E-128W2
	3039	Cable diagram =E1+TMA_E-128W3
	3040	Cable diagram =E1+TMA_E-129W1
	3041	Cable diagram =E1+TMA_E-130W1
	3042	Cable diagram =E1+TMA_E-131W1
	3043	Cable diagram =E1+TMA_E-131W2
	3044	Cable diagram =E1+TMA_E-131W3
	3045	Cable diagram =E1+TMA_E-132W1
	3046	Cable diagram =E1+TMA_E-132W2
	3047	Cable diagram =E1+TMA_E-132W3
	3048	Cable diagram =E1+TMA_E-133W1
	3049	Cable diagram =E1+TMA_E-135W1
	3050	Cable diagram =E1+TMA_E-136W1
	3051	Cable diagram =E1+TMA_E-136W2
	3052	Cable diagram =E1+TMA_E-136W3
	3053	Cable diagram =E1+TMA_E-136W4
	3054	Cable diagram =E1+TMA_E-136W5
	3055	Cable diagram =E1+TMA_E-137W1
	3056	Cable diagram =E1+TMA_E-137W2
	3057	Cable diagram =E1+TMA_E-137W3
	3058	Cable diagram =E1+TMA_E-137W4
	3059	Cable diagram =E1+TMA_E-138W1
	3060	Cable diagram =E1+TMA_E-138W2
	3061	Cable diagram =E1+TMA_E-138W3
	3062	Cable diagram =E1+TMA_E-138W4
	3063	Cable diagram =E1+TMA_E-138W5
	3064	Cable diagram =E1+TMA_E-139W1

IK4-TEKNIKER
AVDA. OTAOLA 20
20600 Eibar (Gipuzkoa) Spain
Tfno.:(+34) 943 206744
Fax: (+34) 943 202757
Web: www.tekniker.es

Date	23/02/2017							
Reviewed	F.LÓPEZ	2.3	15/12/2017	JOSE MANUEL				
Drew by	jcastano	Review	Date	Name	Review	Date	Name	

3151_LSST — MCS Design Electrical Schematics
LSST TELESCOPE

Replaces | Replaced by

Table of contents :
=REPORT+TMA_E/3037 -
=REPORT+TMA_E/3064

Customer: EMPRESARIOS AGRUPADOS
C/Magallanes, 3
28015 MADRID
91 3098000
http://www.empresariosagrupados.es/

= DOC
+ IND

Table of contents

F06_004_TK

Assignment	Page	Page description
REPORT (LISTADOS)		TMA_E (EXTRUCTURA TELESCOPIO)
	3065	Cable diagram =E1+TMA_E-139W2
	3066	Cable diagram =E1+TMA_E-139W3
	3067	Cable diagram =E1+TMA_E-139W4
	3068	Cable diagram =E1+TMA_E-139W5
	3069	Cable diagram =E1+TMA_E-140W1
	3070	Cable diagram =E1+TMA_E-140W2
	3071	Cable diagram =E1+TMA_E-140W3
	3072	Cable diagram =E1+TMA_E-140W4
	3073	Cable diagram =E1+TMA_E-140W5
	3074	Cable diagram =E1+TMA_E-141W1
	3075	Cable diagram =E1+TMA_E-141W2
	3076	Cable diagram =E1+TMA_E-141W3
	3077	Cable diagram =E1+TMA_E-141W4
	3078	Cable diagram =E1+TMA_E-142W1
	3079	Cable diagram =E1+TMA_E-142W2
	3080	Cable diagram =E1+TMA_E-142W3
	3081	Cable diagram =E1+TMA_E-142W4
	3082	Cable diagram =E1+TMA_E-142W5
	3083	Cable diagram =E1+TMA_E-143W1
	3084	Cable diagram =E1+TMA_E-143W2
	3085	Cable diagram =E1+TMA_E-143W3
	3086	Cable diagram =E1+TMA_E-143W4
	3087	Cable diagram =E1+TMA_E-150W1
	3088	Cable diagram =E1+TMA_E-150W2
	3089	Cable diagram =E1+TMA_E-150W3
	3090	Cable diagram =E1+TMA_E-150W4
	3091	Cable diagram =E1+TMA_E-150W5
	3092	Cable diagram =E1+TMA_E-151W1

IK4-TEKNIKER
AVDA. OTAOLA 20
20600 Eibar (Gipuzkoa) Spain
Tfno.:(+34) 943 206744
Fax: (+34) 943 202757
Web: www.tekniker.es

Date	23/02/2017						
Reviewed	F.LÓPEZ	2.3	15/12/2017	JOSE MANUEL			
Drew by	jcastano	Review	Date	Name	Review	Date	Name

3151_LSST — MCS Design Electrical Schematics
LSST TELESCOPE

Replaces | Replaced by

Table of contents :
=REPORT+TMA_E/3065 -
=REPORT+TMA_E/3092

Customer: EMPRESARIOS AGRUPADOS
C/Magallanes, 3
28015 MADRID
91 3098000
http://www.empresariosagrupados.es/

= DOC
+ IND

Table of contents

F06_004_TK

Assignment	Page	Page description
REPORT (LISTADOS)		TMA_E (EXTRUCTURA TELESCOPIO)
	3093	Cable diagram =E1+TMA_E-151W2
	3094	Cable diagram =E1+TMA_E-151W3
	3095	Cable diagram =E1+TMA_E-151W4
	3096	Cable diagram =E1+TMA_E-152W1
	3097	Cable diagram =E1+TMA_E-152W2
	3098	Cable diagram =E1+TMA_E-152W3
	3099	Cable diagram =E1+TMA_E-152W4
	3100	Cable diagram =E1+TMA_E-152W5
	3101	Cable diagram =E1+TMA_E-153W1
	3102	Cable diagram =E1+TMA_E-153W2
	3103	Cable diagram =E1+TMA_E-153W3
	3104	Cable diagram =E1+TMA_E-153W4
	3105	Cable diagram =E1+TMA_E-153W5
	3106	Cable diagram =E1+TMA_E-154W1
	3107	Cable diagram =E1+TMA_E-154W2
	3108	Cable diagram =E1+TMA_E-154W3
	3109	Cable diagram =E1+TMA_E-154W4
	3110	Cable diagram =E1+TMA_E-155W1
	3111	Cable diagram =E1+TMA_E-155W2
	3112	Cable diagram =E1+TMA_E-155W3
	3113	Cable diagram =E1+TMA_E-155W4
	3114	Cable diagram =E1+TMA_E-155W5
	3115	Cable diagram =E1+TMA_E-205W1
	3116	Cable diagram =E1+TMA_E-205W3
	3117	Cable diagram =E1+TMA_E-205W3A
	3118	Cable diagram =E1+TMA_E-206W1
	3119	Cable diagram =E1+TMA_E-206W1A
	3120	Cable diagram =E1+TMA_E-206W2

IK4-TEKNIKER
AVDA. OTAOLA 20
20600 Eibar (Gipuzkoa) Spain
Tfno.:(+34) 943 206744
Fax: (+34) 943 202757
Web: www.tekniker.es

Date	23/02/2017							
Reviewed	F.LÓPEZ	2.3	15/12/2017	JOSE MANUEL				
Drew by	jcastano	Review	Date	Name	Review	Date	Name	

3151_LSST
MCS Design Electrical Schematics
LSST TELESCOPE

Replaces | Replaced by

Table of contents :
=REPORT+TMA_E/3093 -
=REPORT+TMA_E/3120

Customer: EMPRESARIOS AGRUPADOS
C/Magallanes, 3
28015 MADRID
91 3098000
http://www.empresariosagrupados.es/

= DOC
+ IND

Table of contents

F06_004_TK

Assignment	Page	Page description
REPORT (LISTADOS)		TMA_E (EXTRUCTURA TELESCOPIO)
	3121	Cable diagram =E1+TMA_E-206W2A
	3122	Cable diagram =E1+TMA_E-206W3
	3123	Cable diagram =E1+TMA_E-206W3A
	3124	Cable diagram =E1+TMA_E-206W4
	3125	Cable diagram =E1+TMA_E-221W2
	3126	Cable diagram =E1+TMA_E-221W2A
	3127	Cable diagram =E1+TMA_E-221W3
	3128	Cable diagram =E1+TMA_E-221W3A
	3129	Cable diagram =E1+TMA_E-221W4
	3130	Cable diagram =E1+TMA_E-221W4A
	3131	Cable diagram =E1+TMA_E-221W5
	3132	Cable diagram =E1+TMA_E-223W1
	3133	Cable diagram =E1+TMA_E-223W2
	3134	Cable diagram =E1+TMA_E-255W1
	3135	Cable diagram =E1+TMA_E-255W2
	3136	Cable diagram =E1+TMA_E-255W3
	3137	Cable diagram =E1+TMA_E-255W3A
	3138	Cable diagram =E1+TMA_E-255W4
	3139	Cable diagram =E1+TMA_E-255W4A
	3140	Cable diagram =E1+TMA_E-255W5
	3141	Cable diagram =E1+TMA_E-255W6
	3142	Cable diagram =E1+TMA_E-255W7
	3143	Cable diagram =E1+TMA_E-255W8
	3144	Cable diagram =E1+TMA_E-301W1
	3145	Cable diagram =E1+TMA_E-301W2
	3146	Cable diagram =E1+TMA_E-302W1
	3147	Cable diagram =E1+TMA_E-302W2
	3148	Cable diagram =E1+TMA_E-303W1

IK4-TEKNIKER
AVDA. OTAOLA 20
20600 Eibar (Gipuzkoa) Spain
Tfno.:(+34) 943 206744
Fax: (+34) 943 202757
Web: www.tekniker.es

Date	23/02/2017						
Reviewed	F.LÓPEZ	2.3	15/12/2017	JOSE MANUEL			
Drew by	jcastano	Review	Date	Name	Review	Date	Name

3151_LSST — MCS Design Electrical Schematics
LSST TELESCOPE
Replaces — Replaced by

Table of contents :
=REPORT+TMA_E/3121 -
=REPORT+TMA_E/3148

Customer: EMPRESARIOS AGRUPADOS
C/Magallanes, 3
28015 MADRID
91 3098000
http://www.empresariosagrupados.es/

= DOC
+ IND

Table of contents

F06_004_TK

Assignment	Page	Page description
REPORT (LISTADOS)		TMA_E (EXTRUCTURA TELESCOPIO)
	3149	Cable diagram =E1+TMA_E-303W2
	3150	Cable diagram =E1+TMA_E-304W1
	3151	Cable diagram =E1+TMA_E-304W2
	3152	Cable diagram =E1+TMA_E-320W3
	3153	Cable diagram =E1+TMA_E-320W4
	3154	Cable diagram =E1+TMA_E-320W5
	3155	Cable diagram =E1+TMA_E-320W7
	3156	Cable diagram =E1+TMA_E-320W8
	3157	Cable diagram =E1+TMA_E-320W9
	3158	Cable diagram =E1+TMA_E-320W10
	3159	Cable diagram =E1+TMA_E-320W11
	3160	Cable diagram =E1+TMA_E-320W12
	3161	Cable diagram =E1+TMA_E-321W1
	3162	Cable diagram =E1+TMA_E-321W2
	3163	Cable diagram =E1+TMA_E-321W3
	3164	Cable diagram =E1+TMA_E-321W4
	3165	Cable diagram =E1+TMA_E-321W5
	3166	Cable diagram =E1+TMA_E-321W6
	3167	Cable diagram =E1+TMA_E-321W7
	3168	Cable diagram =E1+TMA_E-322W3
	3169	Cable diagram =E1+TMA_E-322W4
	3170	Cable diagram =E1+TMA_E-322W5
	3171	Cable diagram =E1+TMA_E-323W1
	3172	Cable diagram =E1+TMA_E-323W2
	3173	Cable diagram =E1+TMA_E-323W3
	3174	Cable diagram =E1+TMA_E-323W4
	3175	Cable diagram =E1+TMA_E-324W1
	3176	Cable diagram =E1+TMA_E-324W2

IK4 TEKNIKER Research Alliance
IK4-TEKNIKER
AVDA. OTAOLA 20
20600 Eibar (Gipuzkoa) Spain
Tfno.:(+34) 943 206744
Fax: (+34) 943 202757
Web: www.tekniker.es

Date	23/02/2017						
Reviewed	F.LÓPEZ	2.3	15/12/2017	JOSE MANUEL			
Drew by	jcastano	Review	Date	Name	Review	Date	Name

3151_LSST

MCS Design Electrical Schematics

LSST TELESCOPE

Replaces

Replaced by

Table of contents :
=REPORT+TMA_E/3149 -
=REPORT+TMA_E/3176

Customer:

EMPRESARIOS AGRUPADOS

C/Magallanes, 3
28015 MADRID
91 3098000

http://www.empresariosagrupados.es/

= DOC
+ IND

Table of contents

F06_004_TK

Assignment	Page	Page description
REPORT (LISTADOS)		TMA_E (EXTRUCTURA TELESCOPIO)
	3177	Cable diagram =E1+TMA_E-324W3
	3178	Cable diagram =E1+TMA_E-325W13
	3179	Cable diagram =E1+TMA_E-325W14
	3180	Cable diagram =E1+TMA_E-327W1
	3181	Cable diagram =E1+TMA_E-327W2
	3182	Cable diagram =E1+TMA_E-327W3
	3183	Cable diagram =E1+TMA_E-328W1
	3184	Cable diagram =E1+TMA_E-328W2
	3185	Cable diagram =E1+TMA_E-330W1
	3186	Cable diagram =E1+TMA_E-330W2
	3187	Cable diagram =E1+TMA_E-330W3
	3188	Cable diagram =E1+TMA_E-331W1
	3189	Cable diagram =E1+TMA_E-332W1
	3190	Cable diagram =E1+TMA_E-333W1
	3191	Cable diagram =E1+TMA_E-334W1
	3192	Cable diagram =E1+TMA_E-335W1
	3193	Cable diagram =E1+TMA_E-335W2
	3194	Cable diagram =E1+TMA_E-335W3
	3195	Cable diagram =E1+TMA_E-335W4
	3196	Cable diagram =E1+TMA_E-335W5
	3197	Cable diagram =E1+TMA_E-336W1
	3198	Cable diagram =E1+TMA_E-336W2
	3199	Cable diagram =E1+TMA_E-336W3
	3200	Cable diagram =E1+TMA_E-336W5
	3201	Cable diagram =E1+TMA_E-337W1
	3202	Cable diagram =E1+TMA_E-337W2
	3203	Cable diagram =E1+TMA_E-337W3
	3204	Cable diagram =E1+TMA_E-337W4

IK4 TEKNIKER Research Alliance

IK4-TEKNIKER
AVDA. OTAOLA 20
20600 Eibar (Gipuzkoa) Spain
Tfno.:(+34) 943 206744
Fax: (+34) 943 202757
Web: www.tekniker.es

Date	23/02/2017							
Reviewed	F.LÓPEZ	2.3	15/12/2017	JOSE MANUEL				
Drew by	jcastano	Review	Date	Name	Review	Date	Name	

3151_LSST

MCS Design Electrical Schematics

LSST TELESCOPE

Replaces | Replaced by

Table of contents :
=REPORT+TMA_E/3177 -
=REPORT+TMA_E/3204

Customer: EMPRESARIOS AGRUPADOS
C/Magallanes, 3
28015 MADRID
91 3098000
http://www.empresariosagrupados.es/

= DOC
+ IND

Table of contents

F06_004_TK

Assignment	Page	Page description
REPORT (LISTADOS)		TMA_E (EXTRUCTURA TELESCOPIO)
	3205	Cable diagram =E1+TMA_E-337W5
	3206	Cable diagram =E1+TMA_E-338W1
	3207	Cable diagram =E1+TMA_E-338W4
	3208	Cable diagram =E1+TMA_E-339W1
	3209	Cable diagram =E1+TMA_E-339W2
	3210	Cable diagram =E1+TMA_E-339W3
	3211	Cable diagram =E1+TMA_E-340W1
	3212	Cable diagram =E1+TMA_E-340W2
	3213	Cable diagram =E1+TMA_E-340W3
	3214	Cable diagram =E1+TMA_E-340W4
	3215	Cable diagram =E1+TMA_E-340W5
	3216	Cable diagram =E1+TMA_E-340W6
	3217	Cable diagram =E1+TMA_E-341W1
	3218	Cable diagram =E1+TMA_E-341W2
	3219	Cable diagram =E1+TMA_E-345W1
	3220	Cable diagram =E1+TMA_E-350W1
	3221	Cable diagram =E1+TMA_E-350W2
	3222	Cable diagram =E1+TMA_E-350W3
	3223	Cable diagram =E1+TMA_E-350W4
	3224	Cable diagram =E1+TMA_E-350W5
	3225	Cable diagram =E1+TMA_E-350W6
	3226	Cable diagram =E1+TMA_E-350W7
	3227	Cable diagram =E1+TMA_E-350W8
	3228	Cable diagram =E1+TMA_E-350W9
	3229	Cable diagram =E1+TMA_E-351W1
	3230	Cable diagram =E1+TMA_E-351W2
	3231	Cable diagram =E1+TMA_E-352W1
	3232	Cable diagram =E1+TMA_E-352W2

IK4 TEKNIKER Research Alliance

IK4-TEKNIKER
AVDA. OTAOLA 20
20600 Eibar (Gipuzkoa) Spain
Tfno.:(+34) 943 206744
Fax: (+34) 943 202757
Web: www.tekniker.es

Date	23/02/2017							
Reviewed	F.LÓPEZ	2.3	15/12/2017	JOSE MANUEL				
Drew by	jcastano	Review	Date	Name	Review	Date	Name	

3151_LSST

MCS Design Electrical Schematics

LSST TELESCOPE

Replaces | Replaced by

Table of contents :
=REPORT+TMA_E/3205 -
=REPORT+TMA_E/3232

Customer: EMPRESARIOS AGRUPADOS
C/Magallanes, 3
28015 MADRID
91 3098000
http://www.empresariosagrupados.es/

= DOC
+ IND

Table of contents

F06_004_TK

Assignment	Page	Page description
REPORT (LISTADOS)		TMA_E (EXTRUCTURA TELESCOPIO)
	3233	Cable diagram =E1+TMA_E-353W1
	3234	Cable diagram =E1+TMA_E-353W2
	3235	Cable diagram =E1+TMA_E-353W3
	3236	Cable diagram =E1+TMA_E-353W4
	3237	Cable diagram =E1+TMA_E-355W1
	3238	Cable diagram =E1+TMA_E-355W2
	3239	Cable diagram =E1+TMA_E-355W3
	3240	Cable diagram =E1+TMA_E-355W4
	3241	Cable diagram =E1+TMA_E-501W1
	3242	Cable diagram =E1+TMA_E-501W1A
	3243	Cable diagram =E1+TMA_E-501W2
	3244	Cable diagram =E1+TMA_E-501W2A
	3245	Cable diagram =E1+TMA_E-501W3
	3246	Cable diagram =E1+TMA_E-501W3A
	3247	Cable diagram =E1+TMA_E-501W4
	3248	Cable diagram =E1+TMA_E-510W1
	3249	Cable diagram =E1+TMA_E-510W2
	3250	Cable diagram =E1+TMA_E-510W3
	3251	Cable diagram =E1+TMA_E-510W4
	3252	Cable diagram =E1+TMA_E-510W5
	3253	Cable diagram =E1+TMA_E-510W6
	3254	Cable diagram =E1+TMA_E-510W7
	3255	Cable diagram =E1+TMA_E-510W8
	3256	Cable diagram =E1+TMA_E-510W9
	3257	Cable diagram =E1+TMA_E-511W1
	3258	Cable diagram =E1+TMA_E-511W2
	3259	Cable diagram =E1+TMA_E-511W3
	3260	Cable diagram =E1+TMA_E-511W4

IK4 TEKNIKER Research Alliance

IK4-TEKNIKER
AVDA. OTAOLA 20
20600 Eibar (Gipuzkoa) Spain
Tfno.:(+34) 943 206744
Fax: (+34) 943 202757
Web: www.tekniker.es

Date	23/02/2017							
Reviewed	F.LÓPEZ	2.3	15/12/2017	JOSE MANUEL				
Drew by	jcastano	Review	Date	Name	Review	Date	Name	

3151_LSST — MCS Design Electrical Schematics

LSST TELESCOPE

Replaces | Replaced by

Table of contents :
=REPORT+TMA_E/3233 -
=REPORT+TMA_E/3260

Customer: EMPRESARIOS AGRUPADOS
C/Magallanes, 3
28015 MADRID
91 3098000
http://www.empresariosagrupados.es/

= DOC
+ IND

Table of contents

F06_004_TK

Assignment	Page	Page description
REPORT (LISTADOS)		TMA_E (EXTRUCTURA TELESCOPIO)
	3261	Cable diagram =E1+TMA_E-511W5
	3262	Cable diagram =E1+TMA_E-511W6
	3263	Cable diagram =E1+TMA_E-511W7
	3264	Cable diagram =E1+TMA_E-511W8
	3265	Cable diagram =E1+TMA_E-511W9
	3266	Cable diagram =E1+TMA_E-511W10
	3267	Cable diagram =E1+TMA_E-512W1
	3268	Cable diagram =E1+TMA_E-512W2
	3269	Cable diagram =E1+TMA_E-512W3
	3270	Cable diagram =E1+TMA_E-512W4
	3271	Cable diagram =E1+TMA_E-512W5
	3272	Cable diagram =E1+TMA_E-512W6
	3273	Cable diagram =E1+TMA_E-512W7
	3274	Cable diagram =E1+TMA_E-512W8
	3275	Cable diagram =E1+TMA_E-512W9
	3276	Cable diagram =E1+TMA_E-512W10
	3277	Cable diagram =E1+TMA_E-513W1
	3278	Cable diagram =E1+TMA_E-513W2
	3279	Cable diagram =E1+TMA_E-513W3
	3280	Cable diagram =E1+TMA_E-513W4
	3281	Cable diagram =E1+TMA_E-513W5
	3282	Cable diagram =E1+TMA_E-513W6
	3283	Cable diagram =E1+TMA_E-530W3
	3284	Cable diagram =E1+TMA_E-530W4
	3285	Cable diagram =E1+TMA_E-531W3
	3286	Cable diagram =E1+TMA_E-531W4
	3287	Cable diagram =E1+TMA_E-532W2
	3288	Cable diagram =E1+TMA_E-533W1

Table of contents

F06_004_TK

Assignment	Page	Page description
REPORT (LISTADOS)		TMA_E (EXTRUCTURA TELESCOPIO)
	3289	Cable diagram =E1+TMA_E-533W2
	3290	Cable diagram =E1+TMA_E-534W1
	3291	Cable diagram =E1+TMA_E-534W2
	3292	Cable diagram =E1+TMA_E-535W1
	3293	Cable diagram =E1+TMA_E-560W1
	3294	Cable diagram =E1+TMA_E-560W2
	3295	Cable diagram =E1+TMA_E-561W1
	3296	Cable diagram =E1+TMA_E-561W2
	3297	Cable diagram =E1+TMA_E-561W3
	3298	Cable diagram =E1+TMA_E-561W4
	3299	Cable diagram =E1+TMA_E-561W5
	3300	Cable diagram =E1+TMA_E-561W6
	3301	Cable diagram =E1+TMA_E-561W7
	3302	Cable diagram =E1+TMA_E-561W8
	3303	Cable diagram =E1+TMA_E-561W9
	3304	Cable diagram =E1+TMA_E-561W10
	3305	Cable diagram =E1+TMA_E-561W11
	3306	Cable diagram =E1+TMA_E-561W12
	3307	Cable diagram =E1+TMA_E-561W14
	3308	Cable diagram =E1+TMA_E-562W1
	3309	Cable diagram =E1+TMA_E-562W2
	3310	Cable diagram =E1+TMA_E-562W3
	3311	Cable diagram =E1+TMA_E-562W4
	3312	Cable diagram =E1+TMA_E-564W1
	3313	Cable diagram =E1+TMA_E-564W2
	3314	Cable diagram =E1+TMA_E-564W3
	3315	Cable diagram =E1+TMA_E-570W1
	3316	Cable diagram =E1+TMA_E-570W2

IK4-TEKNIKER
AVDA. OTAOLA 20
20600 Eibar (Gipuzkoa) Spain
Tfno.:(+34) 943 206744
Fax: (+34) 943 202757
Web: www.tekniker.es

Date	23/02/2017							
Reviewed	F.LÓPEZ	2.3	15/12/2017	JOSE MANUEL				
Drew by	jcastano	Review	Date	Name	Review	Date	Name	

3151_LSST

MCS Design Electrical Schematics

LSST TELESCOPE

Replaces | Replaced by

Table of contents :
=REPORT+TMA_E/3289 -
=REPORT+TMA_E/3316

Customer: EMPRESARIOS AGRUPADOS
C/Magallanes, 3
28015 MADRID
91 3098000
http://www.empresariosagrupados.es/

= DOC
+ IND

Table of contents

F06_004_TK

Assignment	Page	Page description
REPORT (LISTADOS)		TMA_E (EXTRUCTURA TELESCOPIO)
	3317	Cable diagram =E1+TMA_E-570W3
	3318	Cable diagram =E1+TMA_E-570W4
	3319	Cable diagram =E1+TMA_E-570W5
	3320	Cable diagram =E1+TMA_E-570W6
	3321	Cable diagram =E1+TMA_E-570W7
	3322	Cable diagram =E1+TMA_E-570W8
	3323	Cable diagram =E1+TMA_E-571W1
	3324	Cable diagram =E1+TMA_E-571W2
	3325	Cable diagram =E1+TMA_E-571W3
	3326	Cable diagram =E1+TMA_E-572W1
	3327	Cable diagram =E1+TMA_E-572W2
	3328	Cable diagram =E1+TMA_E-572W3
	3329	Cable diagram =E1+TMA_E-572W4
	3330	Cable diagram =E1+TMA_E-574W1
	3331	Cable diagram =E1+TMA_E-574W2
	3332	Cable diagram =E1+TMA_E-574W3
	3333	Cable diagram =E1+TMA_E-630W1
	3334	Cable diagram =E1+TMA_E-630W2
	3335	Cable diagram =E1+TMA_E-630W3
	3336	Cable diagram =E1+TMA_E-630W4
	3337	Cable diagram =E1+TMA_E-630W5
	3338	Cable diagram =E1+TMA_E-630W6
	3339	Cable diagram =E1+TMA_E-630W7
	3340	Cable diagram =E1+TMA_E-630W8
	3341	Cable diagram =E1+TMA_E-631W1
	3342	Cable diagram =E1+TMA_E-631W2
	3343	Cable diagram =E1+TMA_E-631W3
	3344	Cable diagram =E1+TMA_E-631W4

IK4 TEKNIKER Research Alliance

IK4-TEKNIKER
AVDA. OTAOLA 20
20600 Eibar (Gipuzkoa) Spain
Tfno.:(+34) 943 206744
Fax: (+34) 943 202757
Web: www.tekniker.es

Date	23/02/2017							
Reviewed	F.LÓPEZ	2.3	15/12/2017	JOSE MANUEL				
Drew by	jcastano	Review	Date	Name	Review	Date	Name	

3151_LSST

MCS Design Electrical Schematics

LSST TELESCOPE

Replaces | Replaced by

Table of contents :
=REPORT+TMA_E/3317 -
=REPORT+TMA_E/3344

Customer: EMPRESARIOS AGRUPADOS
C/Magallanes, 3
28015 MADRID
91 3098000
http://www.empresariosagrupados.es/

= DOC
+ IND

Table of contents

F06_004_TK

Assignment	Page	Page description
REPORT (LISTADOS)		TMA_E (EXTRUCTURA TELESCOPIO)
	3345	Cable diagram =E1+TMA_E-701W1
	3346	Cable diagram =E1+TMA_E-701W1A
	3347	Cable diagram =E1+TMA_E-701W2
	3348	Cable diagram =E1+TMA_E-701W3
	3349	Cable diagram =E1+TMA_E-701W3A
	3350	Cable diagram =E1+TMA_E-701W4
	3351	Cable diagram =E1+TMA_E-701W4A
	4001	Cable overview : =E1+TMA_E-128AW1 - =E1+TMA_E-109W2A
	4001.a	Cable overview : =E1+TMA_E-112W1 - =E1+TMA_E-120W1
	4001.b	Cable overview : =E1+TMA_E-120W1 - =E1+TMA_E-128W1
	4001.c	Cable overview : =E1+TMA_E-128W2 - =E1+TMA_E-136W4
	4001.d	Cable overview : =E1+TMA_E-136W5 - =E1+TMA_E-140W2
	4001.e	Cable overview : =E1+TMA_E-140W3 - =E1+TMA_E-150W1
	4001.f	Cable overview : =E1+TMA_E-150W1 - =E1+TMA_E-153W3
	4001.g	Cable overview : =E1+TMA_E-153W4 - =E1+TMA_E-206W2A
	4001.h	Cable overview : =E1+TMA_E-206W3 - =E1+TMA_E-255W6
	4001.i	Cable overview : =E1+TMA_E-255W7 - =E1+TMA_E-320W10
	4001.j	Cable overview : =E1+TMA_E-320W11 - =E1+TMA_E-323W2
	4001.k	Cable overview : =E1+TMA_E-323W2 - =E1+TMA_E-328W2
	4001.l	Cable overview : =E1+TMA_E-330W1 - =E1+TMA_E-335W1
	4001.m	Cable overview : =E1+TMA_E-335W2 - =E1+TMA_E-337W2
	4001.n	Cable overview : =E1+TMA_E-337W3 - =E1+TMA_E-340W1
	4001.o	Cable overview : =E1+TMA_E-340W1 - =E1+TMA_E-350W4
	4001.p	Cable overview : =E1+TMA_E-350W5 - =E1+TMA_E-353W2
	4001.q	Cable overview : =E1+TMA_E-353W2 - =E1+TMA_E-510W3
	4001.r	Cable overview : =E1+TMA_E-510W3 - =E1+TMA_E-511W6
	4001.s	Cable overview : =E1+TMA_E-511W7 - =E1+TMA_E-512W9
	4001.t	Cable overview : =E1+TMA_E-512W9 - =E1+TMA_E-532W2

IK4 TEKNIKER Research Alliance

IK4-TEKNIKER
AVDA. OTAOLA 20
20600 Eibar (Gipuzkoa) Spain
Tfno.:(+34) 943 206744
Fax: (+34) 943 202757
Web: www.tekniker.es

Date	23/02/2017							
Reviewed	F.LÓPEZ	2.3	15/12/2017	JOSE MANUEL				
Drew by	jcastano	Review	Date	Name	Review	Date	Name	

3151_LSST — MCS Design Electrical Schematics

LSST TELESCOPE

Replaces | Replaced by

Table of contents :
=REPORT+TMA_E/3345 -
=REPORT+TMA_E/4001.t

Customer: EMPRESARIOS AGRUPADOS
C/Magallanes, 3
28015 MADRID
91 3098000
http://www.empresariosagrupados.es/

= DOC
+ IND

Table of contents

F06_004_TK

Assignment	Page	Page description
REPORT (LISTADOS)		TMA_E (EXTRUCTURA TELESCOPIO)
	4001.u	Cable overview : =E1+TMA_E-533W1 - =E1+TMA_E-561W4
	4001.v	Cable overview : =E1+TMA_E-561W4 - =E1+TMA_E-561W14
	4001.w	Cable overview : =E1+TMA_E-561W14 - =E1+TMA_E-570W2
	4001.x	Cable overview : =E1+TMA_E-570W3 - =E1+TMA_E-572W2
	4001.y	Cable overview : =E1+TMA_E-572W2 - =E1+TMA_E-630W4
	4001.z	Cable overview : =E1+TMA_E-630W5 - =E1+TMA_E-701W2
	4001.za	Cable overview : =E1+TMA_E-701W2 - =E1+TMA_E-701W4A

IK4 TEKNIKER Research Alliance

IK4-TEKNIKER
AVDA. OTAOLA 20
20600 Eibar (Gipuzkoa) Spain
Tfno.:(+34) 943 206744
Fax: (+34) 943 202757
Web: www.tekniker.es

Date	23/02/2017						
Reviewed	F.LÓPEZ	2.3	15/12/2017	JOSE MANUEL			
Drew by	jcastano	Review	Date	Name	Review	Date	Name

3151_LSST

MCS Design Electrical Schematics

LSST TELESCOPE

Replaces

Replaced by

Table of contents :
=REPORT+TMA_E/4001.u -
=REPORT+TMA_E/4001.za

Customer:

EMPRESARIOS AGRUPADOS

C/Magallanes, 3
28015 MADRID
91 3098000

http://www.empresariosagrupados.es/

= DOC

+ IND

abbreviation colors

Línea	Código de color	Nombre de color	Color en el espacio
1	BK		
2	BN		
3	RD		
4	OG		
5	YE		
6	GN		
7	BU		
8	VT		
9	GY		
10	WH		
11	PK		
12	GD		
13	TQ		
14	SR		
15	GNYE		

TMA-AZ-CS-CBT-0001	MAIN CONTROL CABINET (+X)
TMA-AZ-CS-CBT-0101	AUXILIARY AZIMUTH 1 BOX (-X)
TMA-EL-CS-CBT-0101	AUXILIARY ELEVATION 1 BOX (+X)
TMA-EL-CS-CBT-0102	AUXILIARY ELEVATION 2 BOX (-X)
TMA-PI-CS-CBT-0101	AUXILIARY AZIMUTH CABLE WRAP BOX PIER
TMA-PI-CS-CBT-0102	CCW INTERMEDIATE JUNTION BOX 1
TMA-PI-CS-CBT-0103	CCW INTERMEDIATE JUNTION BOX 2
TMA-AZ-CS-CBT-0102	Handheld 1 AZ (+X)
TMA-AZ-CS-CBT-0103	Handheld 2 AZ (-X)
TMA-EL-CS-CBT-0103	Handheld 3 EL (+X)
TMA-EL-CS-CBT-0104	Handheld 4 EL (-X)
TMA-EL-CS-CBT-0105	CCW INTERMEDIATE JUNCTION BOX
TMA-CCWAUX-CS-CBT-0101	CCW AUXILIAR PORTABLE CABINET
TMA_E	TELESCOPE
TMA-AZ-DR-CBT-0001	PHASE POWER CABINET
TMA-AZ-DR-CBT-0002	PHASE CAPACITOR CABINET CONTROL
TMA-AZ-DR-CBT-0003	PHASE AZ01, AZ02, AZ03, AZ04 JUNTION BOX
TMA-AZ-DR-CBT-0004	PHASE AZ05, AZ06, AZ07, AZ08 JUNTION BOX
TMA-AZ-DR-CBT-0005	PHASE AZ09, AZ10, AZ11, AZ12 JUNTION BOX
TMA-AZ-DR-CBT-0006	PHASE AZ13, AZ14, AZ15, AZ16 JUNTION BOX
TMA-AZ-DR-CBT-0007	PHASE EL01 A-B, EL02 A-B, EL03 A-B JUNTION BOX
TMA-AZ-DR-CBT-0008	PHASE EL04 A-B, EL05 A-B, EL06 A-B JUNTION BOX
TMA-AZ-DR-CPB-0001	PHASE CAPACITOR CABINET 1
TMA-AZ-DR-CPB-0002	PHASE CAPACITOR CABINET 2
TMA-AZ-DR-CPB-0003	PHASE CAPACITOR CABINET 3
TMA-AZ-DR-CPB-0004	PHASE CAPACITOR CABINET 4
TMA-AZ-DR-CPB-0005	PHASE CAPACITOR CABINET 5
TMA-AZ-DR-CPB-0006	PHASE CAPACITOR CABINET 6
TMA-AZ-DR-CPB-0007	PHASE CAPACITOR CABINET 7
TMA-AZ-DR-CPB-0008	PHASE CAPACITOR CABINET 8
TMA-EL-EL-CBT-0003	TEA CABINET 1
TMA-EL-EL-CBT-0004	TEA CABINET 2
TMA-EL-EL-CBT-0005	TEA CABINET 3
TMA-EL-EL-CBT-0006	TEA CABINET 4
TMA-EL-EL-CBT-0007	TEA CABINET 5
TMA-EL-EL-CBT-0008	TEA CABINET 6
TMA-EL-TC-CBT-0001	PLC TEA CABINET
TMA-PI-UC-AC1	AZCW PLATE CONNECTIONS IN PI SIDE
TMA-AZ-UC-AC4	AZCW PLATE CONNECTIONS IN AZ SIDE
TMA-EL-UC-EC3	ELCW-A PLATE CONNECTIONS IN EL SIDE (+X)
TMA-AZ-UC-EC1	ELCW-A PLATE CONNECTIONS IN AZ SIDE (+X)
TMA-EL-UC-EC4	ELCW-B PLATE CONNECTIONS IN EL SIDE (-X)
TMA-AZ-UC-EC2	ELCW-B PLATE CONNECTIONS IN AZ SIDE (-X)
MMCS	CONTROL PRINCIPAL
TMA-PI-PD-CBT-0001	MAIN PANEL
TMA-AZ-PD-CBT-0001	AZIMUTH PANEL
TMA-EL-PD-CBT-0001	ELEVATION PANEL (+X)
TMA-EL-PD-CBT-0002	ELEVATION PANEL (-X)

Customer

EMPRESARIOS AGRUPADOS

EMPRESARIOS AGRUPADOS

C/Magallanes, 3
28015 MADRID
ESPAÑA
91 3098000

http://www.empresariosagrupados.es/

Project:

3151_LSST
MCS Design Electrical Schematics
LSST TELESCOPE

E1
TMA

TMA-AZ-CS-CBT-0001
MAIN CONTROL CABINET (+X)

Number of pages: 710

Made by:

IK4 TEKNIKER
Research Alliance

IK4-TEKNIKER

AVDA. OTAOLA 20
20600 Eibar (Gipuzkoa) Spain
Tfno. : (+34) 943 206744
Fax : (+34) 943 202757
Web: www.tekniker.es

Review	Review description	Date	Reviewed
2.3	VERSION INTERMEDIA PARA MONTAJE ASTURFEITO (SIN EVALUACIONES)	15/12/2017	JOSE MANUEL

Drew by: J.M.CASTAÑO

Reviewed: F.LÓPEZ

Date: 16/12/2015

Replaces:

Replaced by:

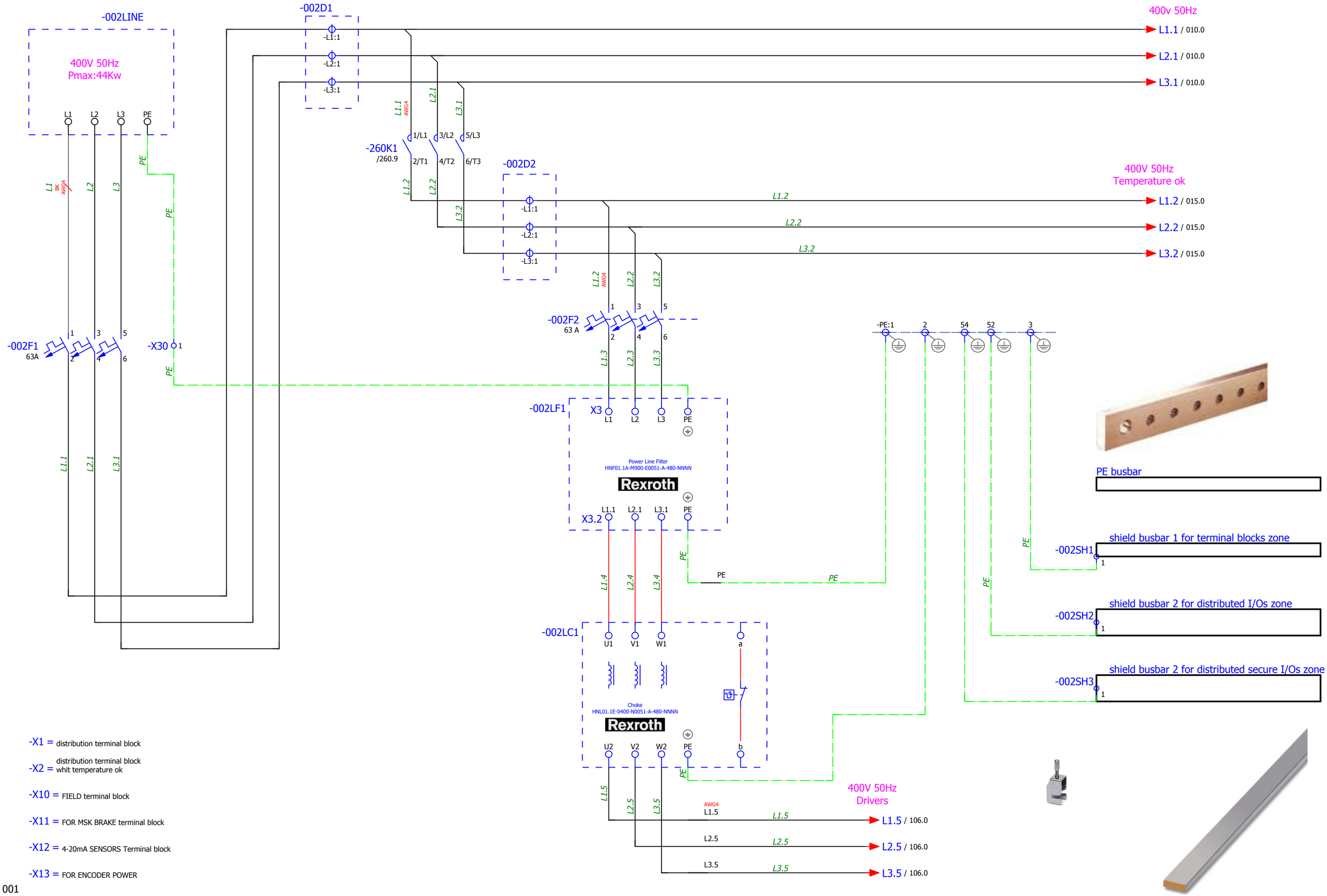

-X1 = distribution terminal block

-X2 = distribution terminal block whit temperature ok

-X10 = FIELD terminal block

-X11 = FOR MSK BRAKE terminal block

-X12 = 4-20mA SENSORS Terminal block

-X13 = FOR ENCODER POWER

IK4 TEKNIKER Research Alliance
IK4-TEKNIKER
AVDA. OTAOLA 20
20600 Eibar (Gipuzkoa) Spain
Tfno.:(+34) 943 206744
Fax: (+34) 943 202757
Web: www.tekniker.es

Date	23/02/2017							
Reviewed	F.LÓPEZ	2.3	15/12/2017	JOSE MANUEL				
Drew by	jcastano	Review	Date	Name	Review	Date	Name	

3151_LSST
MCS Design Electrical Schematics
LSST TELESCOPE
Replaces | Replaced by

POWER

Customer: EMPRESARIOS AGRUPADOS
C/Magallanes, 3
28015 MADRID
91 3098000
http://www.empresariosagrupados.es/

= E1
+ TMA-AZ-CS-CBT-0001

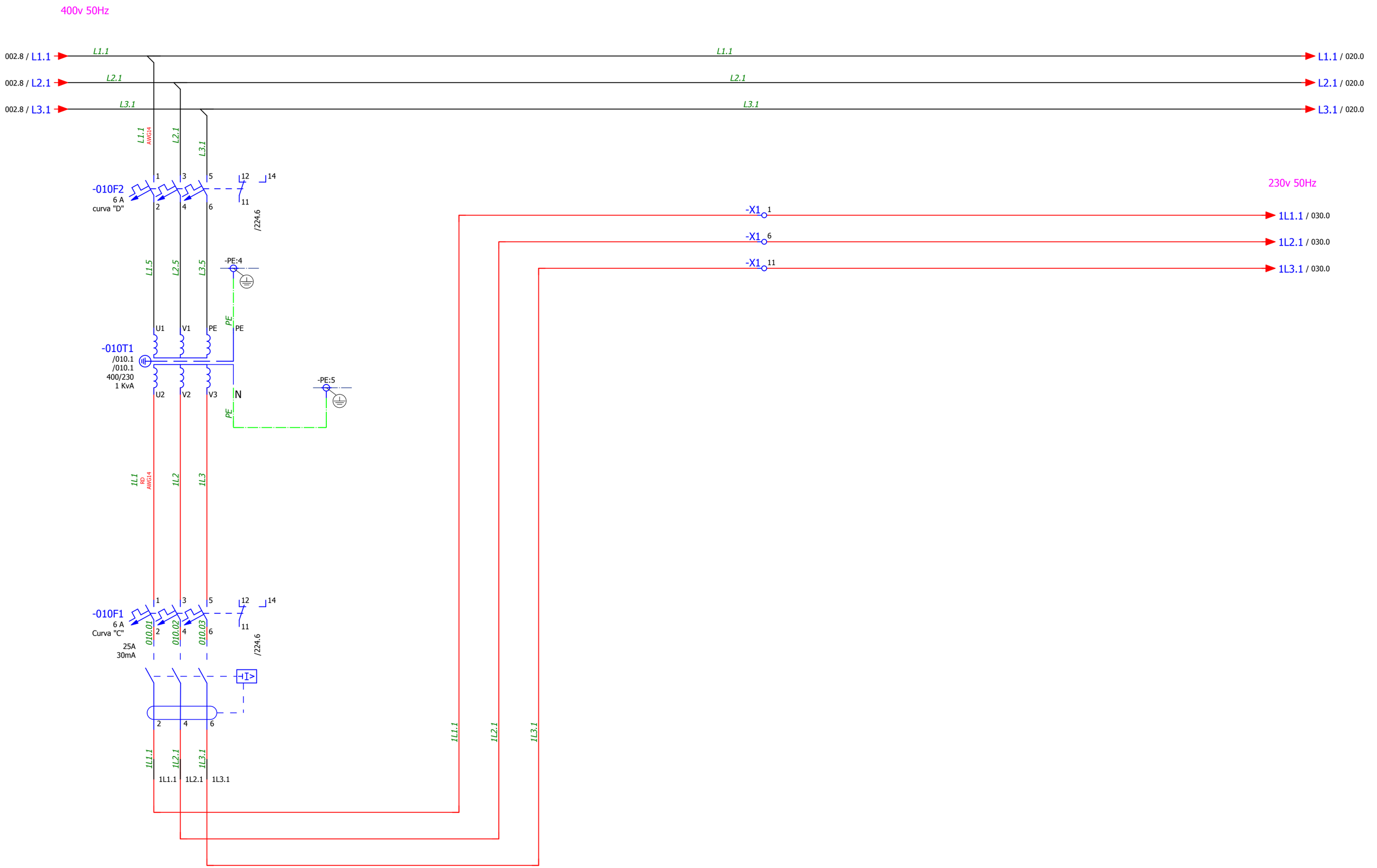

◁ 002

015 ▷

IK4 TEKNIKER Research Alliance	IK4-TEKNIKER AVDA. OTAOLA 20 20600 Eibar (Gipuzkoa) Spain Tfno.:(+34) 943 206744 Fax: (+34) 943 202757 Web: www.tekniker.es								3151_LSST	MCS Design Electrical Schematics LSST TELESCOPE	AC POWER	Customer: EMPRESARIOS AGRUPADOS C/Magallanes, 3 28015 MADRID 91 3098000 http://www.empresariosagrupados.es/	= E1 + TMA-AZ-CS-CBT-0001
		Date	28/11/2017										
		Reviewed	F.LÓPEZ	2.3	15/12/2017	JOSE MANUEL							
		Drew by	JOSE MANUEL	Review	Date	Name	Review	Date	Name	Replaces	Replaced by		Page 010 Total number 710

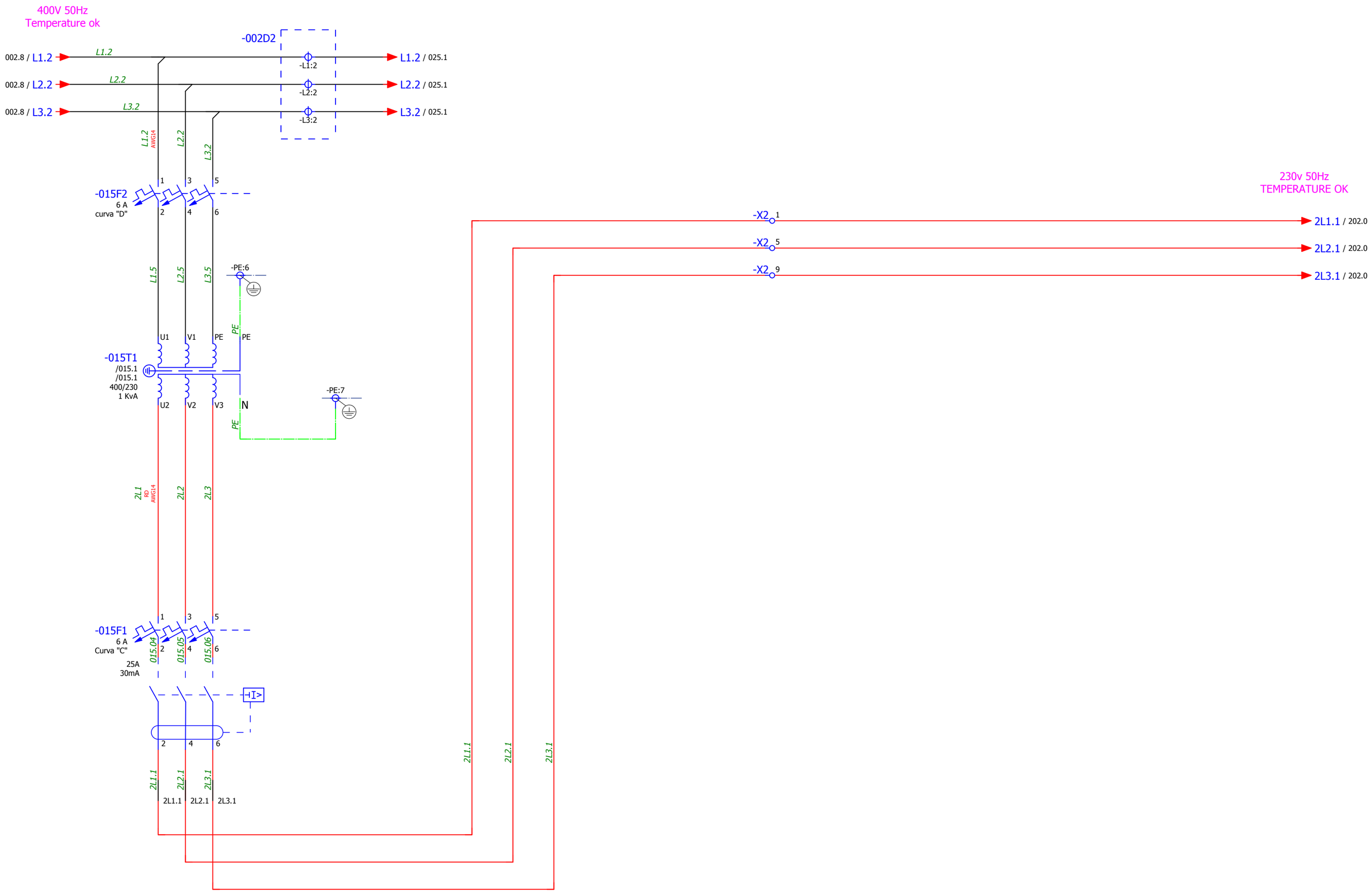

IK4-TEKNIKER
AVDA. OTAOLA 20
20600 Eibar (Gipuzkoa) Spain
Tfno.:(+34) 943 206744
Fax: (+34) 943 202757
Web: www.tekniker.es

Date	28/11/2017						
Reviewed	F.LÓPEZ	2.3	15/12/2017	JOSE MANUEL			
Drew by	JOSE MANUEL	Review	Date	Name	Review	Date	Name

3151_LSST
MCS Design Electrical Schematics
LSST TELESCOPE
Replaces
Replaced by

AC POWER
TEMPERATURE OK

Customer:
EMPRESARIOS AGRUPADOS
C/Magallanes, 3
28015 MADRID
91 3098000
http://www.empresariosagrupados.es/

= E1
+ TMA-AZ-CS-CBT-0001

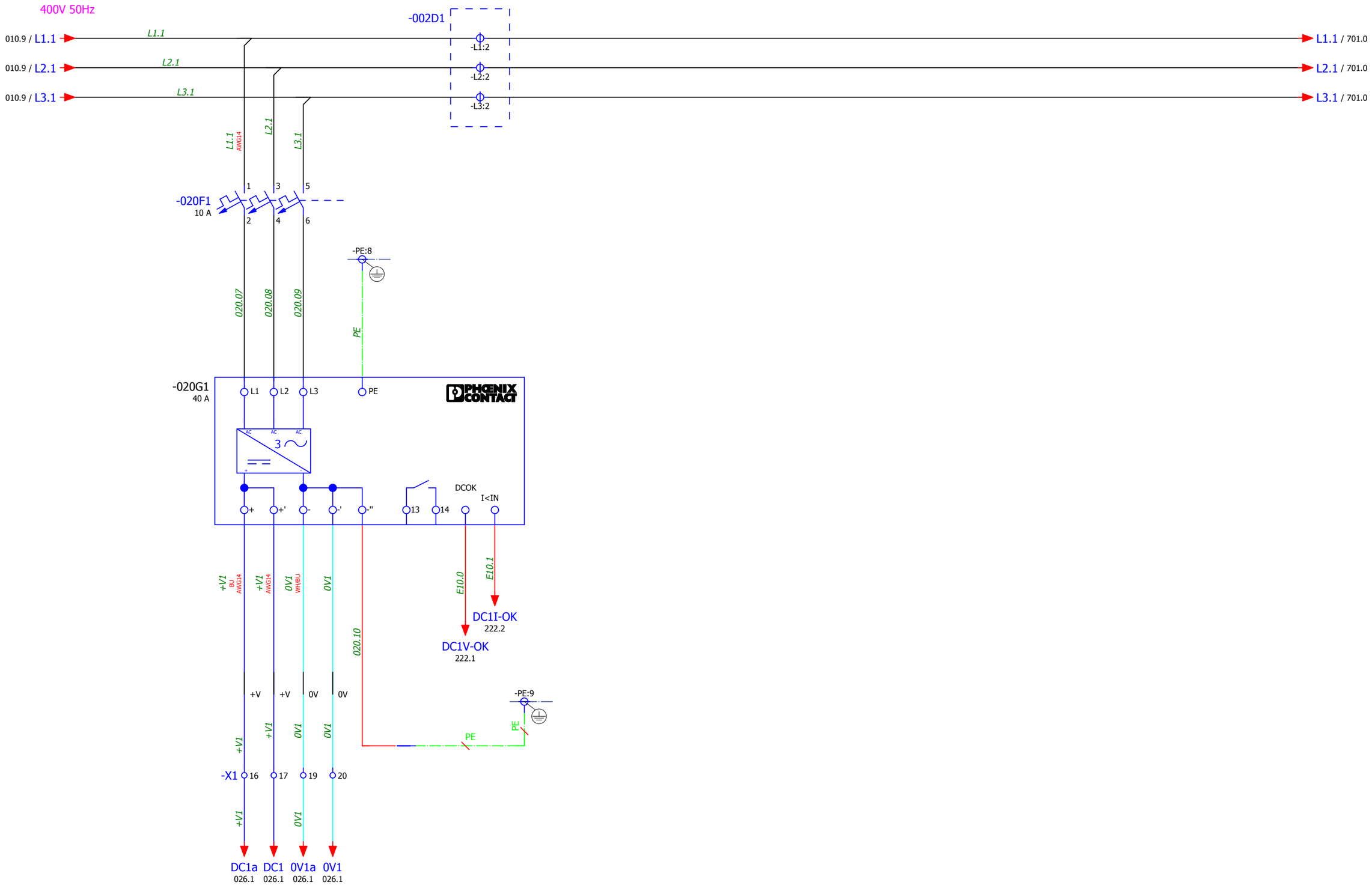

IK4 TEKNIKER Research Alliance

IK4-TEKNIKER
AVDA. OTAOLA 20
20600 Eibar (Gipuzkoa) Spain
Tfno.:(+34) 943 206744
Fax: (+34) 943 202757
Web: www.tekniker.es

Date	14/12/2017						
Reviewed	F.LÓPEZ	2.3	15/12/2017	JOSE MANUEL			
Drew by	JOSE MANUEL	Review	Date	Name	Review	Date	Name

3151_LSST

MCS Design Electrical Schematics

LSST TELESCOPE

Replaces | Replaced by

DC POWER

Customer: EMPRESARIOS AGRUPADOS
C/Magallanes, 3
28015 MADRID
91 3098000
http://www.empresariosagrupados.es/

= E1

+ TMA-AZ-CS-CBT-0001

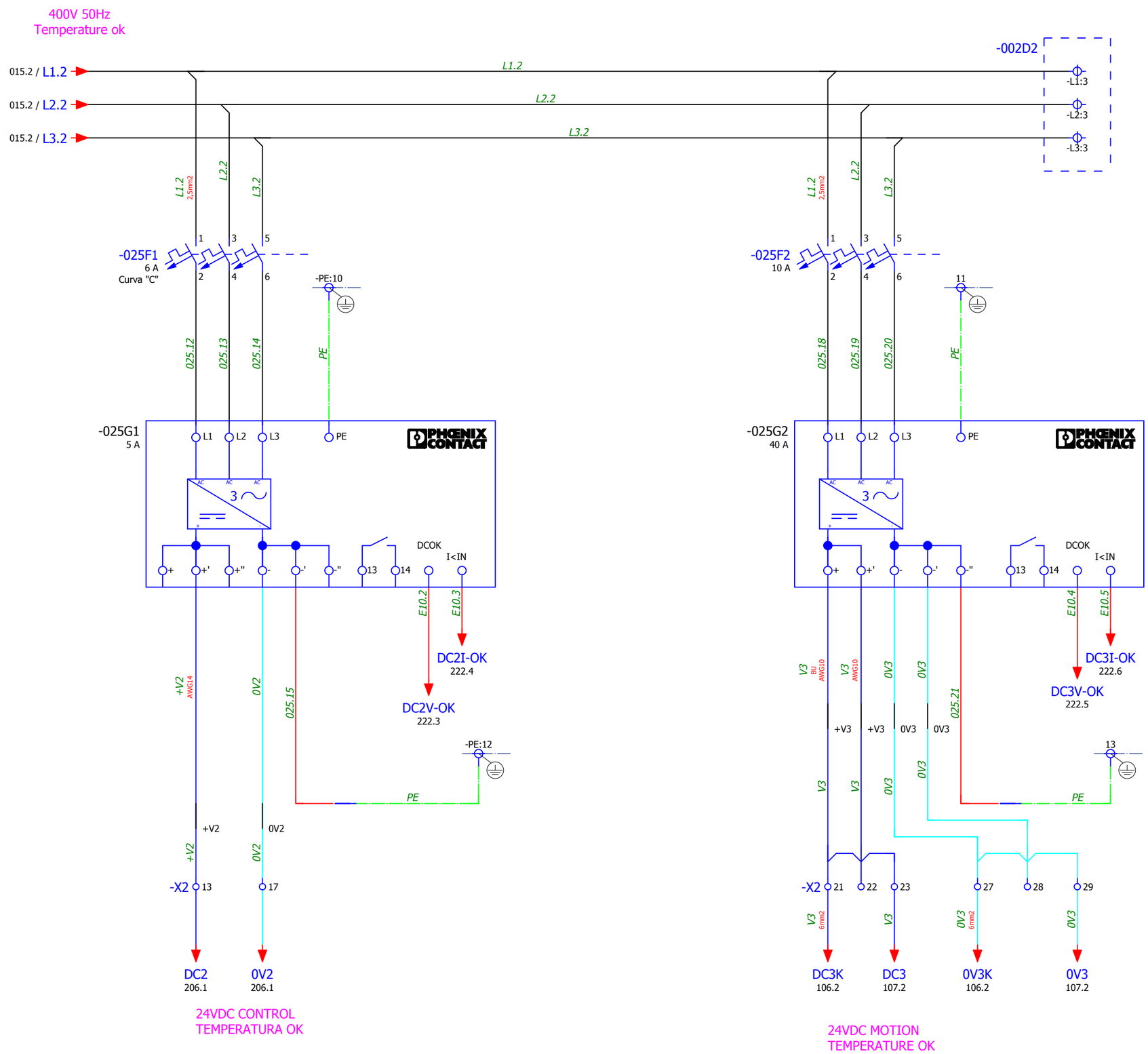

◁ 020

026 ▷

IK4-TEKNIKER
AVDA. OTAOLA 20
20600 Eibar (Gipuzkoa) Spain
Tfno.:(+34) 943 206744
Fax: (+34) 943 202757
Web: www.tekniker.es

Date	29/11/2017							
Reviewed	F.LÓPEZ	2.3	15/12/2017	JOSE MANUEL				
Drew by	JOSE MANUEL	Review	Date	Name	Review	Date	Name	

3151_LSST
MCS Design Electrical Schematics
LSST TELESCOPE

Replaces | Replaced by

DC POWER
TEMPERATURE OK

Customer: EMPRESARIOS AGRUPADOS
C/Magallanes, 3
28015 MADRID
91 3098000
http://www.empresariosagrupados.es/

= E1
+ TMA-AZ-CS-CBT-0001

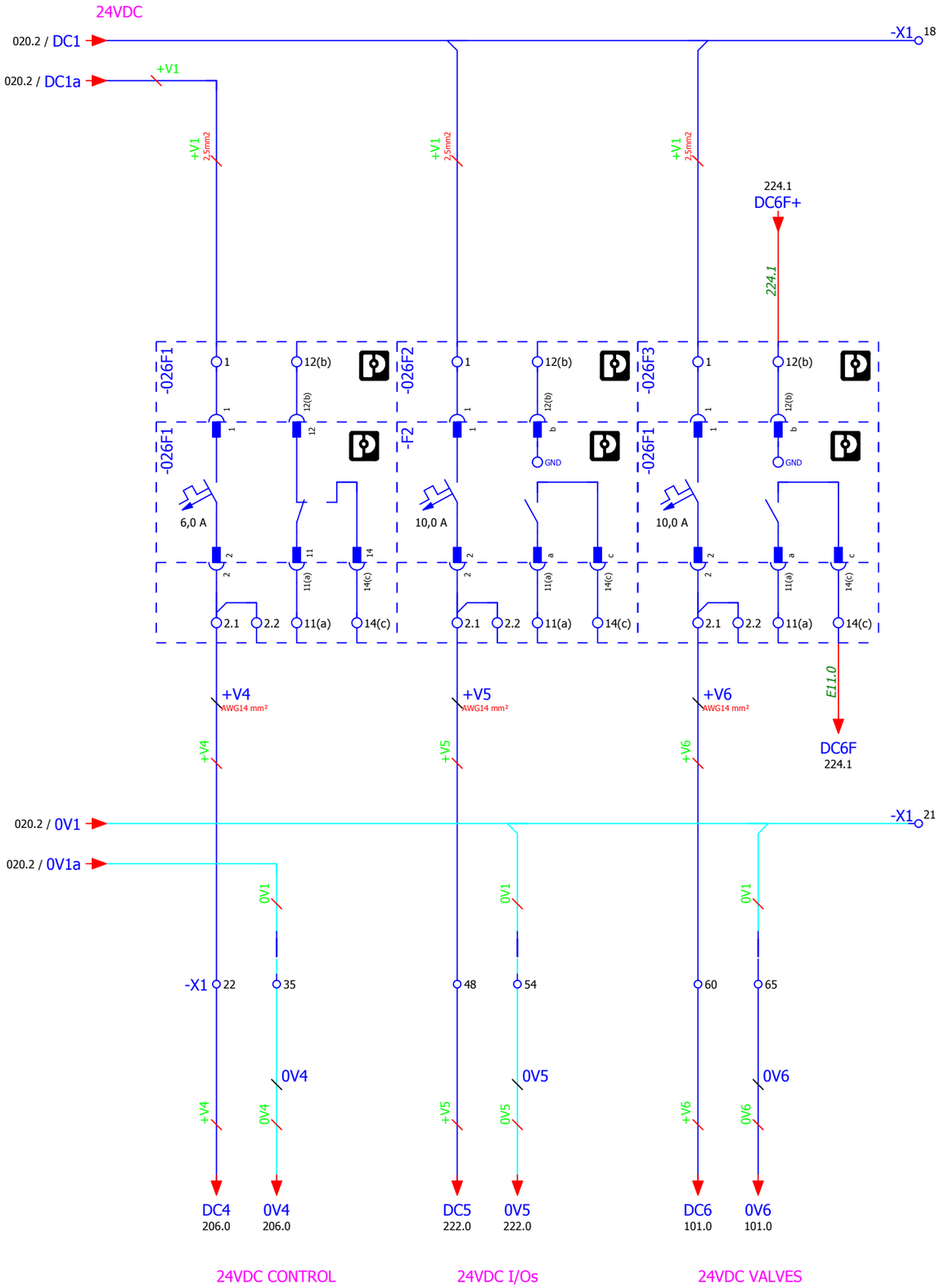

◁ 025

030 ▷

IK4-TEKNIKER
AVDA. OTAOLA 20
20600 Eibar (Gipuzkoa) Spain
Tfno.:(+34) 943 206744
Fax: (+34) 943 202757
Web: www.tekniker.es

Date	28/11/2017						
Reviewed	F.LÓPEZ	2.3	15/12/2017	JOSE MANUEL			
Drew by	JOSE MANUEL	Review	Date	Name	Review	Date	Name

3151_LSST
MCS Design Electrical Schematics
LSST TELESCOPE

Replaces | Replaced by

24 VDC DISTRIBUTION

Customer: EMPRESARIOS AGRUPADOS
C/Magallanes, 3
28015 MADRID
91 3098000
http://www.empresariosagrupados.es/

= E1
+ TMA-AZ-CS-CBT-0001

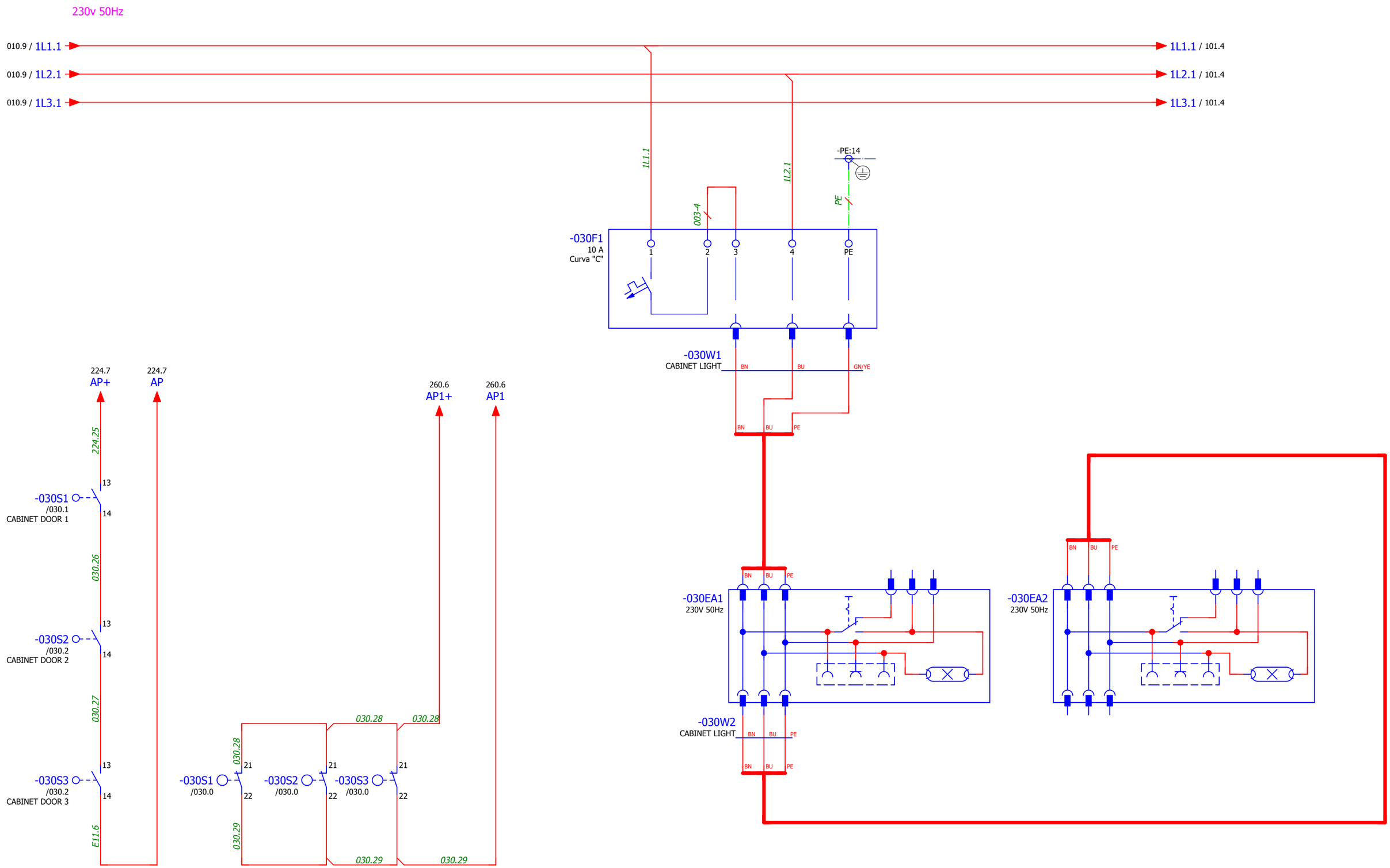

IK4 TEKNIKER Research Alliance

IK4-TEKNIKER
AVDA. OTAOLA 20
20600 Eibar (Gipuzkoa) Spain
Tfno.:(+34) 943 206744
Fax: (+34) 943 202757
Web: www.tekniker.es

Date	29/11/2017						
Reviewed	F.LÓPEZ	2.3	15/12/2017	JOSE MANUEL			
Drew by	JOSE MANUEL	Review	Date	Name	Review	Date	Name

3151_LSST

MCS Design Electrical Schematics

LSST TELESCOPE

Replaces | Replaced by

CABINET SERVICES

Customer: EMPRESARIOS AGRUPADOS
C/Magallanes, 3
28015 MADRID
91 3098000
http://www.empresariosagrupados.es/

= E1

+ TMA-AZ-CS-CBT-0001

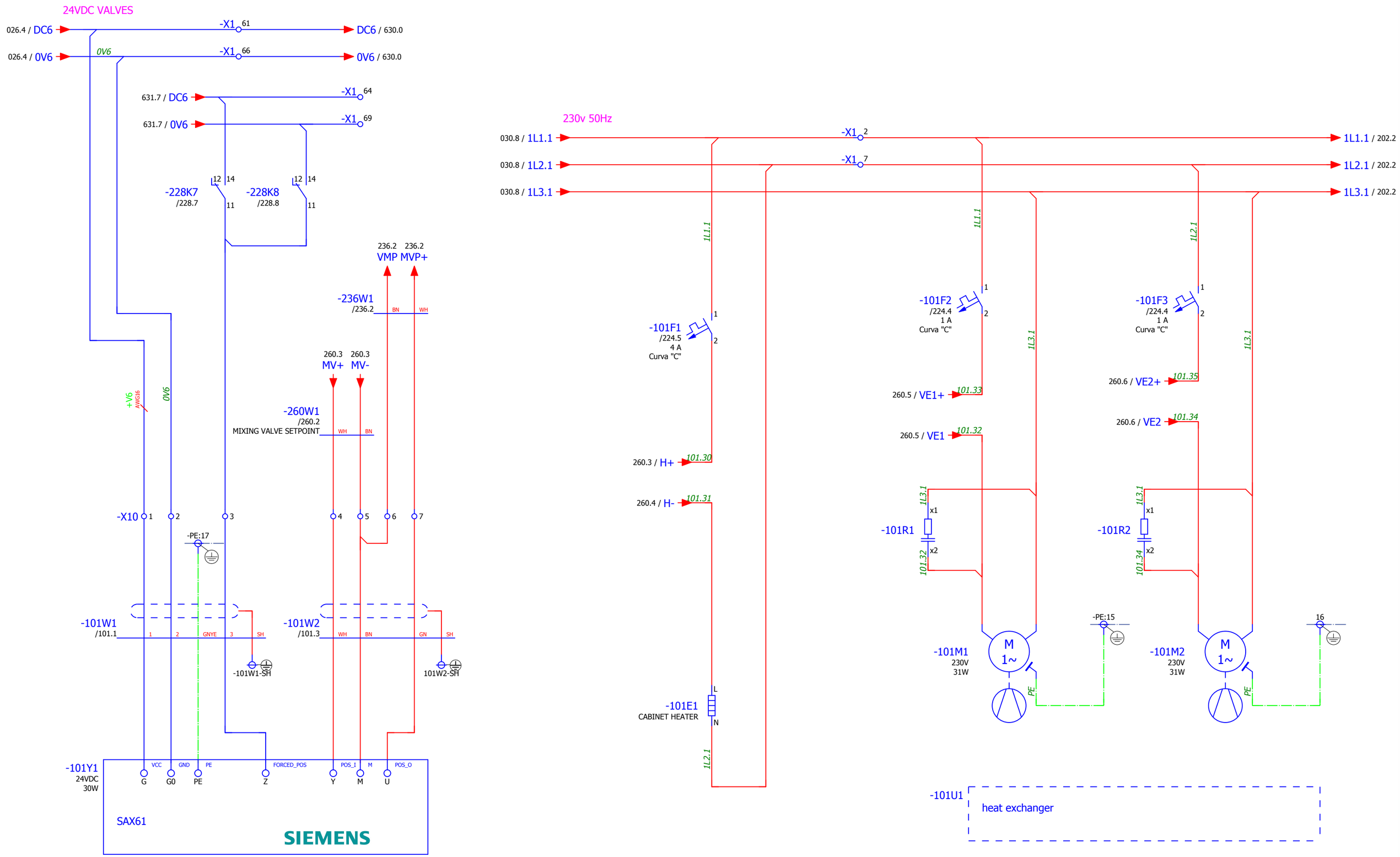

MIXING VALVE

IK4 TEKNIKER Research Alliance

IK4-TEKNIKER
AVDA. OTAOLA 20
20600 Eibar (Gipuzkoa) Spain
Tfno.:(+34) 943 206744
Fax: (+34) 943 202757
Web: www.tekniker.es

Date	15/12/2017						
Reviewed	F.LÓPEZ	2.3	15/12/2017	JOSE MANUEL			
Drew by	JOSE MANUEL	Review	Date	Name	Review	Date	Name

3151_LSST

MCS Design Electrical Schematics

LSST TELESCOPE

Replaces | Replaced by

CABINET TEMPERATURE MODULE

Customer: EMPRESARIOS AGRUPADOS
C/Magallanes, 3
28015 MADRID
91 3098000
http://www.empresariosagrupados.es/

= E1

+ TMA-AZ-CS-CBT-0001

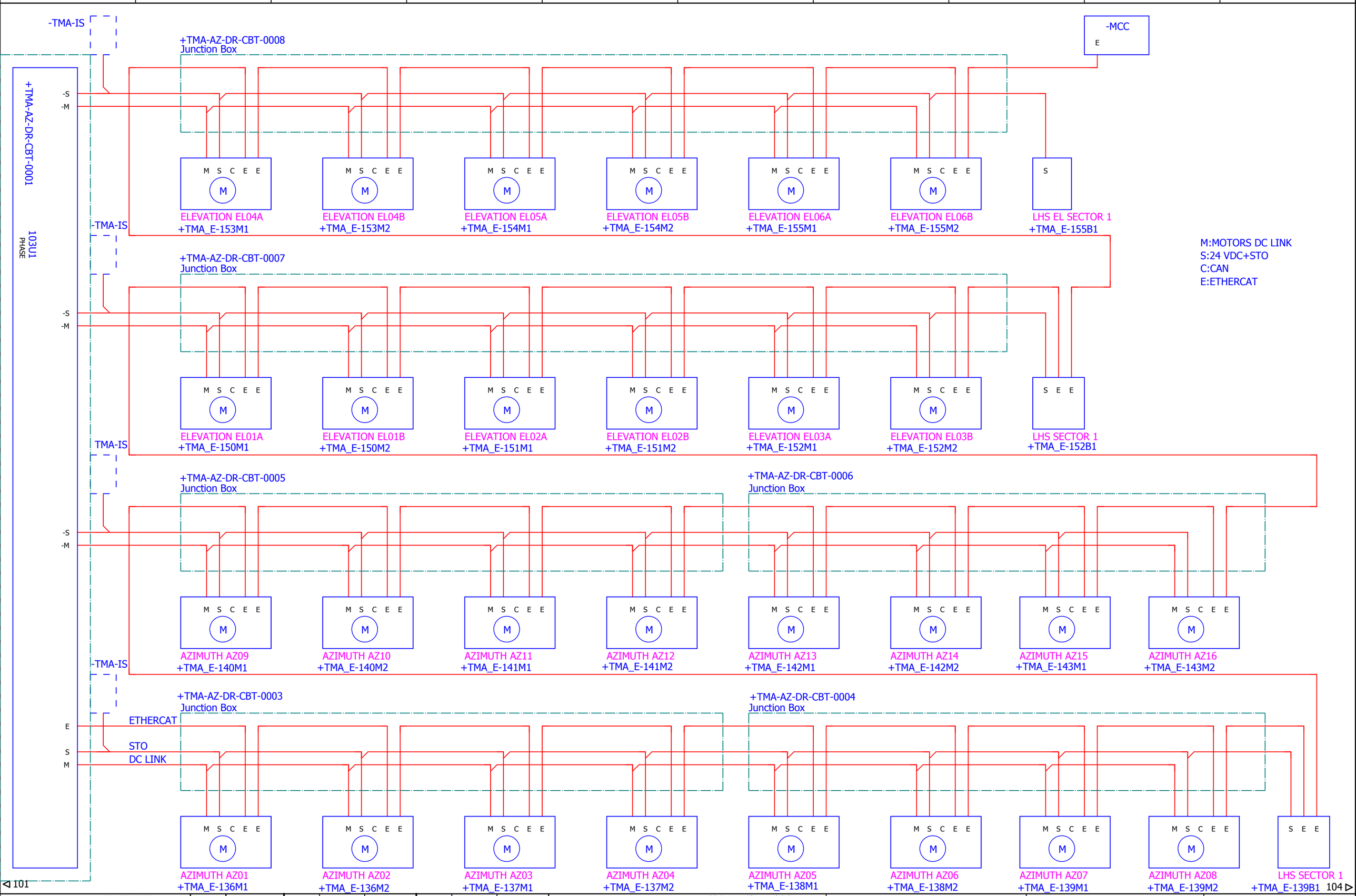

IK4 TEKNIKER Research Alliance	IK4-TEKNIKER AVDA. OTAOLA 20 20600 Eibar (Gipuzkoa) Spain Tfno.:(+34) 943 206744 Fax: (+34) 943 202757 Web: www.tekniker.es								3151_LSST	MCS Design Electrical Schematics LSST TELESCOPE	MOTORS BLOCK DIAGRAM
		Date	20/10/2016								
		Reviewed	F.LÓPEZ	2.3	15/12/2017	JOSE MANUEL					
		Drew by	jcastano	Review	Date	Name	Review	Date	Name	Replaces	Replaced by

Customer: EMPRESARIOS AGRUPADOS
C/Magallanes, 3
28015 MADRID
91 3098000
http://www.empresariosagrupados.es/

= E1
+ TMA-AZ-CS-CBT-0001

Page 103
Total number 710

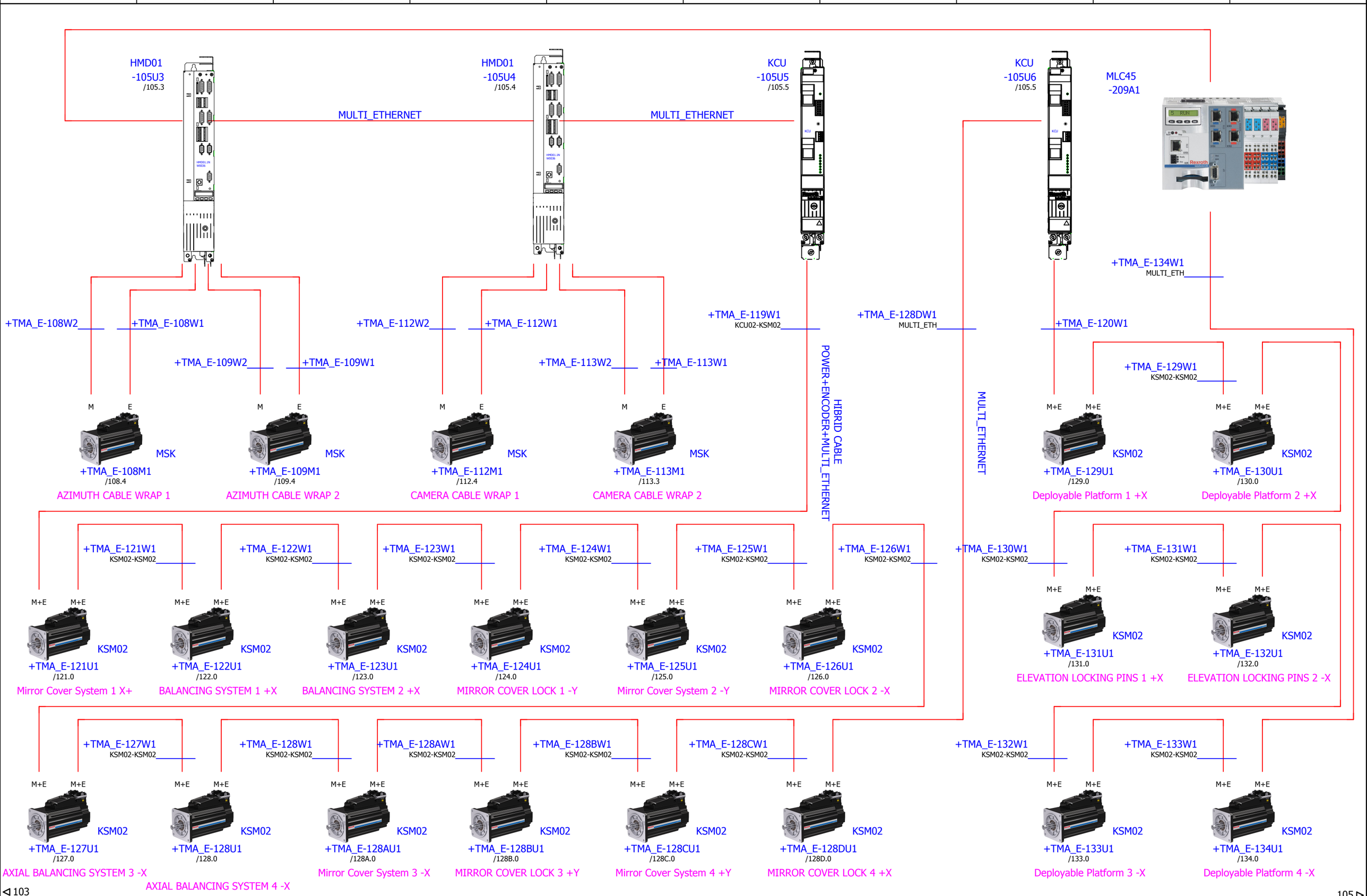

IK4 TEKNIKER Research Alliance

IK4-TEKNIKER
AVDA. OTAOLA 20
20600 Eibar (Gipuzkoa) Spain
Tfno.:(+34) 943 206744
Fax: (+34) 943 202757
Web: www.tekniker.es

Date	15/12/2017						
Reviewed	F.LÓPEZ	2.3	15/12/2017	JOSE MANUEL			
Drew by	JOSE MANUEL	Review	Date	Name	Review	Date	Name

3151_LSST

MCS Design Electrical Schematics

LSST TELESCOPE

Replaces | Replaced by

MOTORS BLOCK DIAGRAM

Customer:

EMPRESARIOS AGRUPADOS
C/Magallanes, 3
28015 MADRID
91 3098000
http://www.empresariosagrupados.es/

= E1

+ TMA-AZ-CS-CBT-0001

IK4-TEKNIKER
AVDA. OTAOLA 20
20600 Eibar (Gipuzkoa) Spain
Tfno.:(+34) 943 206744
Fax: (+34) 943 202757
Web: www.tekniker.es

Date	23/02/2017						
Reviewed	F.LÓPEZ	2.3	15/12/2017	JOSE MANUEL			
Drew by	jcastano	Review	Date	Name	Review	Date	Name

3151_LSST

MCS Design Electrical Schematics

LSST TELESCOPE

Replaces | Replaced by

MOTORS

Customer: EMPRESARIOS AGRUPADOS
C/Magallanes, 3
28015 MADRID
91 3098000
http://www.empresariosagrupados.es/

= E1
+ TMA-AZ-CS-CBT-0001

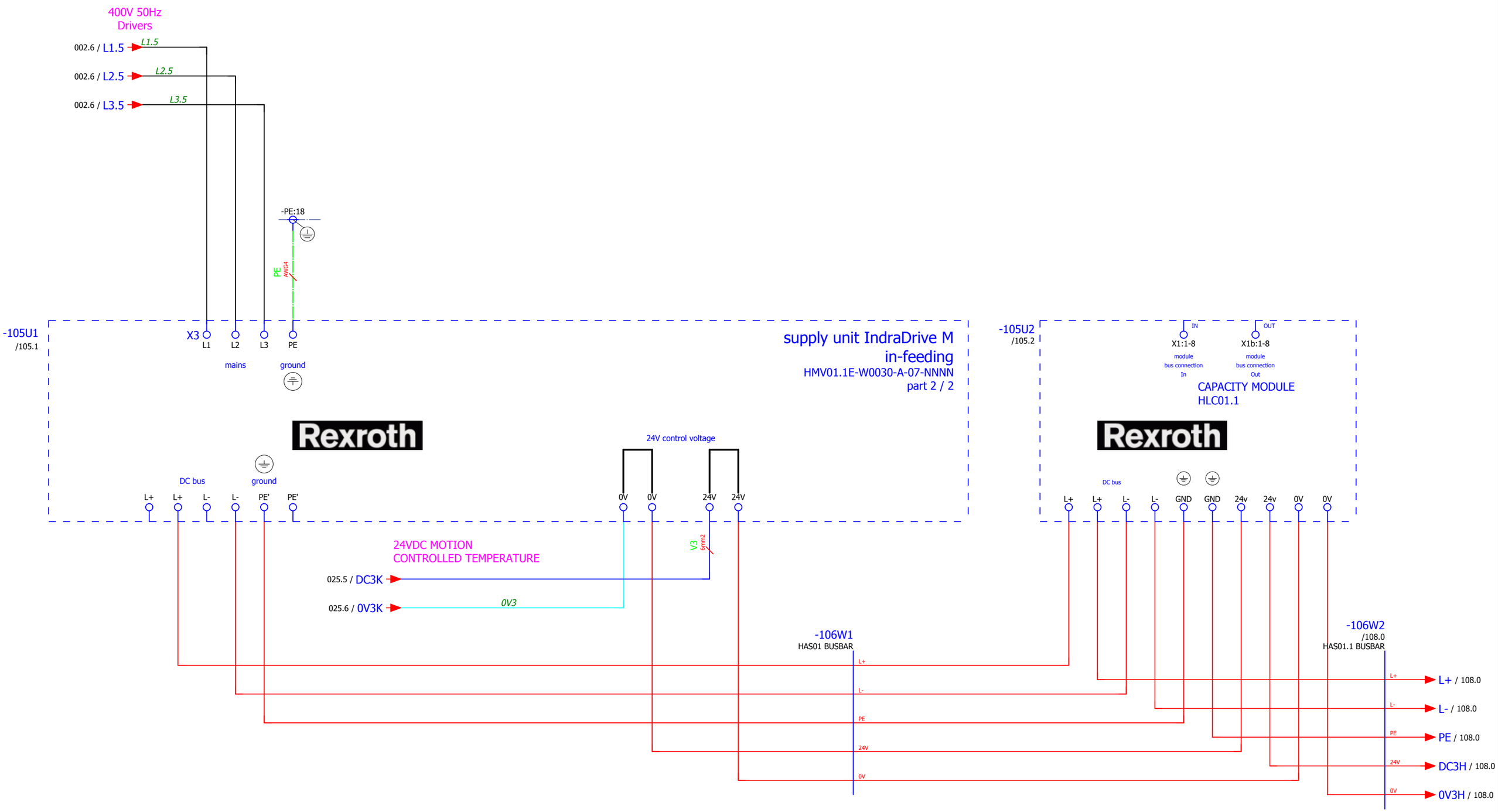

IK4 TEKNIKER
Research Alliance
IK4-TEKNIKER
AVDA. OTAOLA 20
20600 Eibar (Gipuzkoa) Spain
Tfno.:(+34) 943 206744
Fax: (+34) 943 202757
Web: www.tekniker.es

Date	28/11/2017						
Reviewed	F.LÓPEZ	2.3	15/12/2017	JOSE MANUEL			
Drew by	JOSE MANUEL	Review	Date	Name	Review	Date	Name

3151_LSST
MCS Design Electrical Schematics
LSST TELESCOPE

Replaces | Replaced by

MOTORS POWER SUPPLY

Customer: EMPRESARIOS AGRUPADOS
C/Magallanes, 3
28015 MADRID
91 3098000
http://www.empresariosagrupados.es/

= E1
+ TMA-AZ-CS-CBT-0001

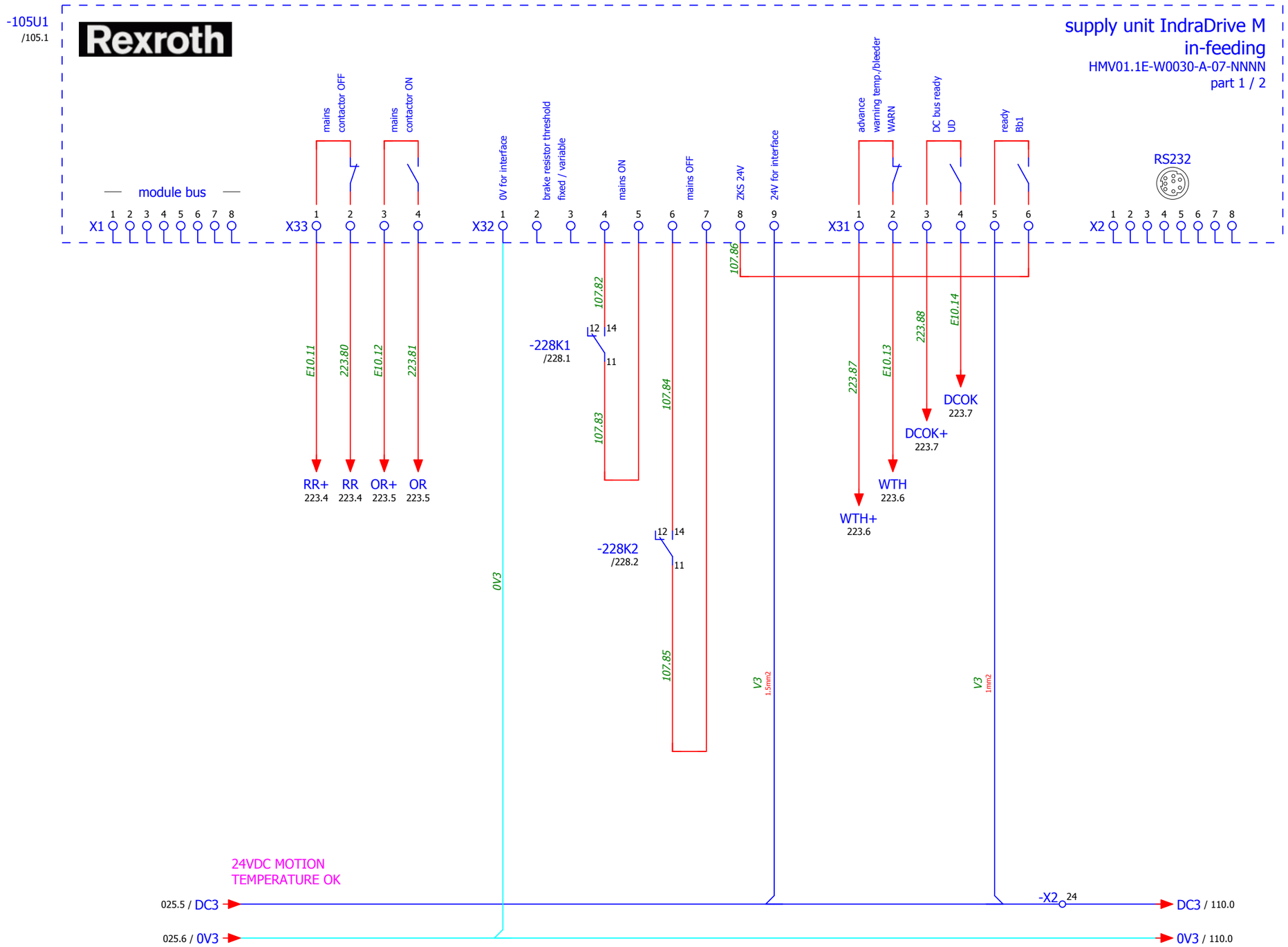

◁ 106

108 ▷

IK4-TEKNIKER
AVDA. OTAOLA 20
20600 Eibar (Gipuzkoa) Spain
Tfno.:(+34) 943 206744
Fax: (+34) 943 202757
Web: www.tekniker.es

Date	13/10/2016						
Reviewed	F.LÓPEZ	2.3	15/12/2017	JOSE MANUEL			
Drew by	jcastano	Review	Date	Name	Review	Date	Name

3151_LSST

MCS Design Electrical Schematics

LSST TELESCOPE

Replaces | Replaced by

MOTORS POWER SUPPLY CONTROL

Customer: EMPRESARIOS AGRUPADOS
C/Magallanes, 3
28015 MADRID
91 3098000
http://www.empresariosagrupados.es/

= E1
+ TMA-AZ-CS-CBT-0001

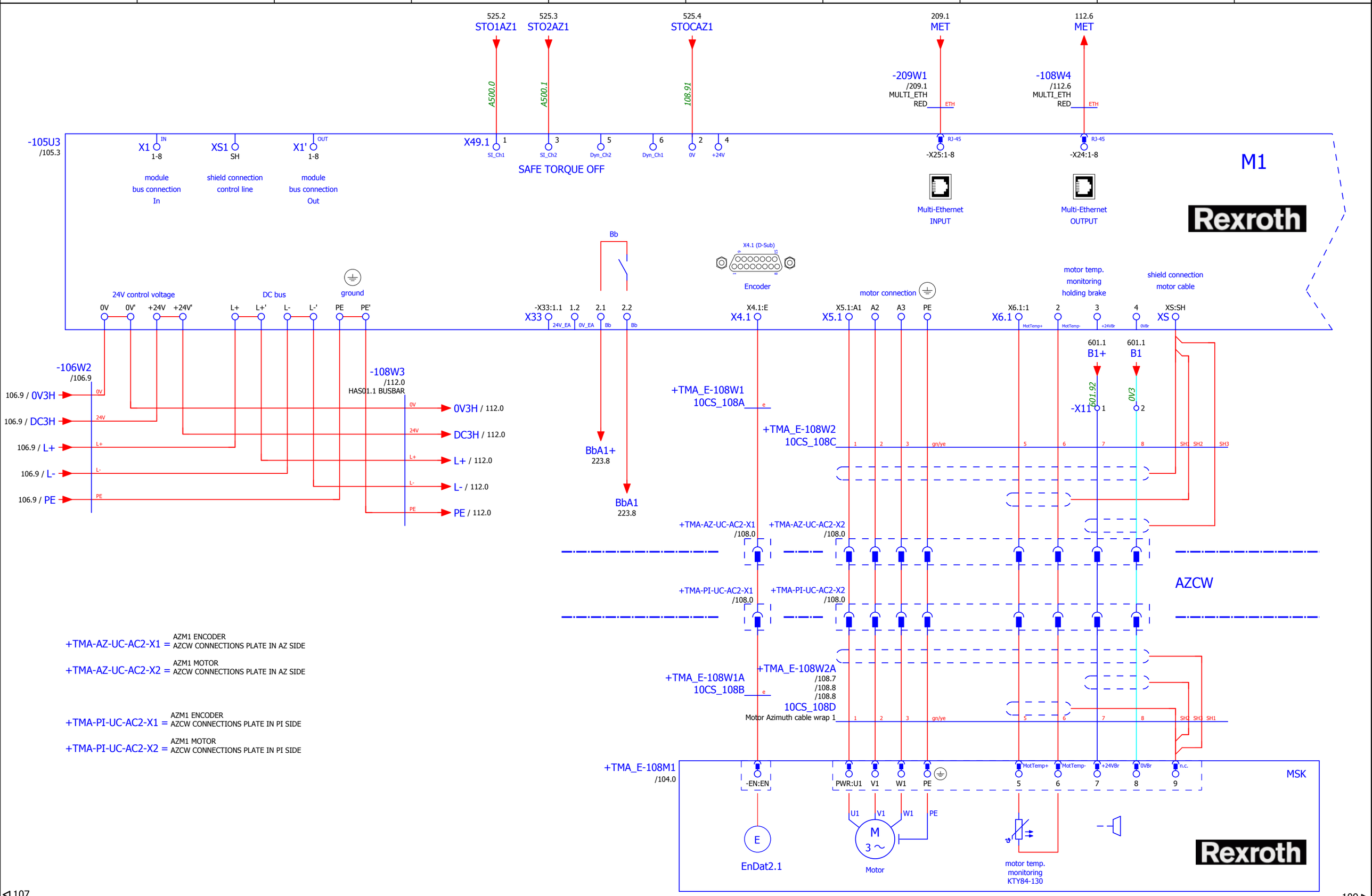

+TMA-AZ-UC-AC2-X1 = AZM1 ENCODER AZCW CONNECTIONS PLATE IN AZ SIDE

+TMA-AZ-UC-AC2-X2 = AZM1 MOTOR AZCW CONNECTIONS PLATE IN AZ SIDE

+TMA-PI-UC-AC2-X1 = AZM1 ENCODER AZCW CONNECTIONS PLATE IN PI SIDE

+TMA-PI-UC-AC2-X2 = AZM1 MOTOR AZCW CONNECTIONS PLATE IN PI SIDE

◁ 107

109 ▷

IK4-TEKNIKER
AVDA. OTAOLA 20
20600 Eibar (Gipuzkoa) Spain
Tfno.:(+34) 943 206744
Fax: (+34) 943 202757
Web: www.tekniker.es

Date	15/12/2017						
Reviewed	F.LÓPEZ	2.3	15/12/2017	JOSE MANUEL			
Drew by	JOSE MANUEL	Review	Date	Name	Review	Date	Name

3151_LSST

MCS Design Electrical Schematics

LSST TELESCOPE

Replaces | Replaced by

POWER MOTOR 1 AZIMUTH CABLE WRAP

Customer: EMPRESARIOS AGRUPADOS
C/Magallanes, 3
28015 MADRID
91 3098000
http://www.empresariosagrupados.es/

= E1

+ TMA-AZ-CS-CBT-0001

Page 108
Total number 710

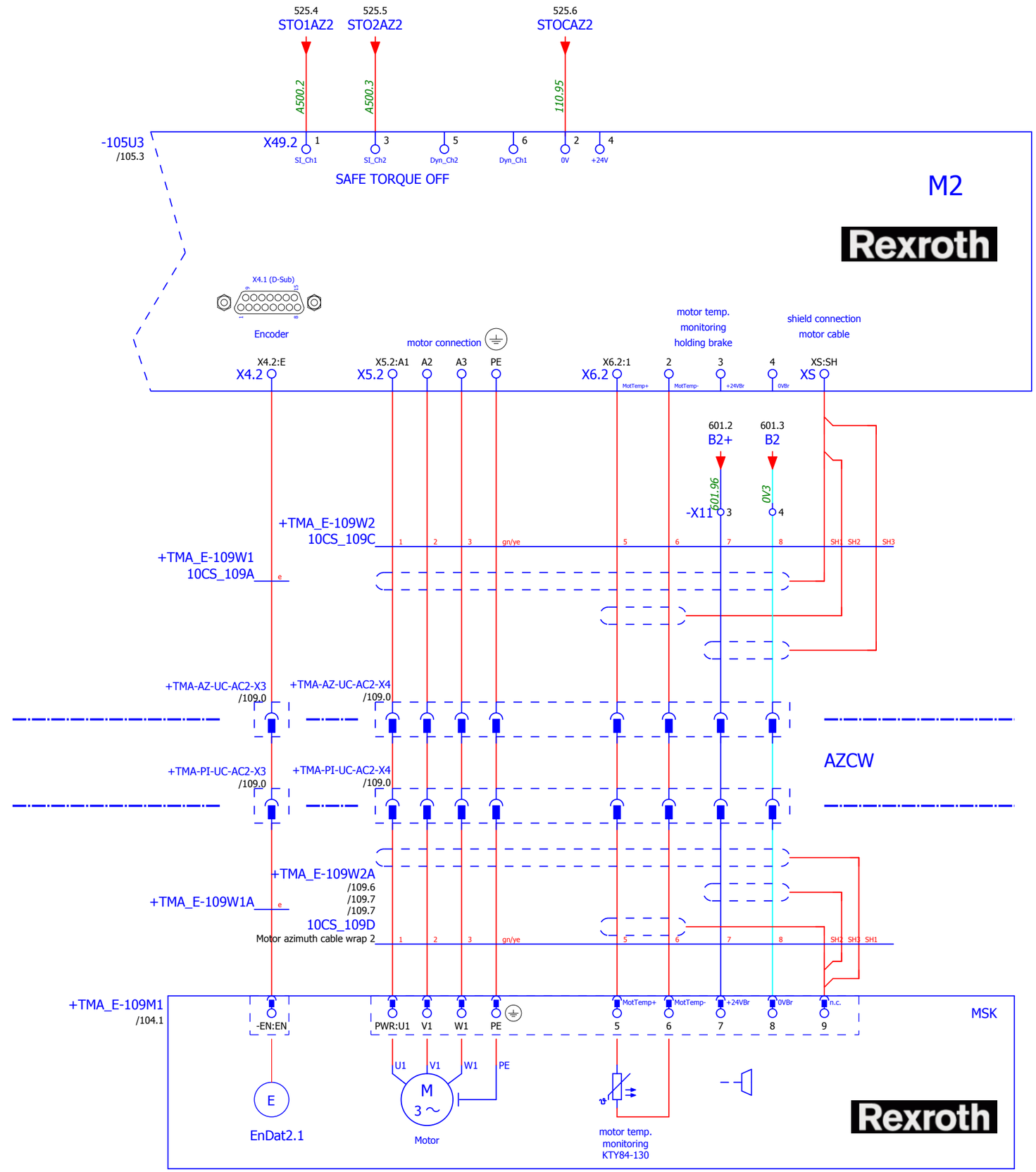

+TMA-AZ-UC-AC2-X3 = AZM2 ENCODER / AZCW CONNECTIONS PLATE IN AZ SIDE

+TMA-AZ-UC-AC2-X4 = AZM2 MOTOR / AZCW CONNECTIONS PLATE IN AZ SIDE

+TMA-PI-UC-AC2-X3 = AZM2 ENCODER / AZCW CONNECTIONS PLATE IN PI SIDE

+TMA-PI-UC-AC2-X4 = AZM2 MOTOR / AZCW CONNECTIONS PLATE IN PI SIDE

IK4 TEKNIKER Research Alliance
IK4-TEKNIKER
AVDA. OTAOLA 20
20600 Eibar (Gipuzkoa) Spain
Tfno.:(+34) 943 206744
Fax: (+34) 943 202757
Web: www.tekniker.es

Date	15/12/2017						
Reviewed	F.LÓPEZ	2.3	15/12/2017	JOSE MANUEL			
Drew by	JOSE MANUEL	Review	Date	Name	Review	Date	Name

3151_LSST — MCS Design Electrical Schematics

LSST TELESCOPE

Replaces | Replaced by

POWER MOTOR 2 AZIMUTH CABLE WRAP

Customer: EMPRESARIOS AGRUPADOS
C/Magallanes, 3
28015 MADRID
91 3098000
http://www.empresariosagrupados.es/

= E1

+ TMA-AZ-CS-CBT-0001

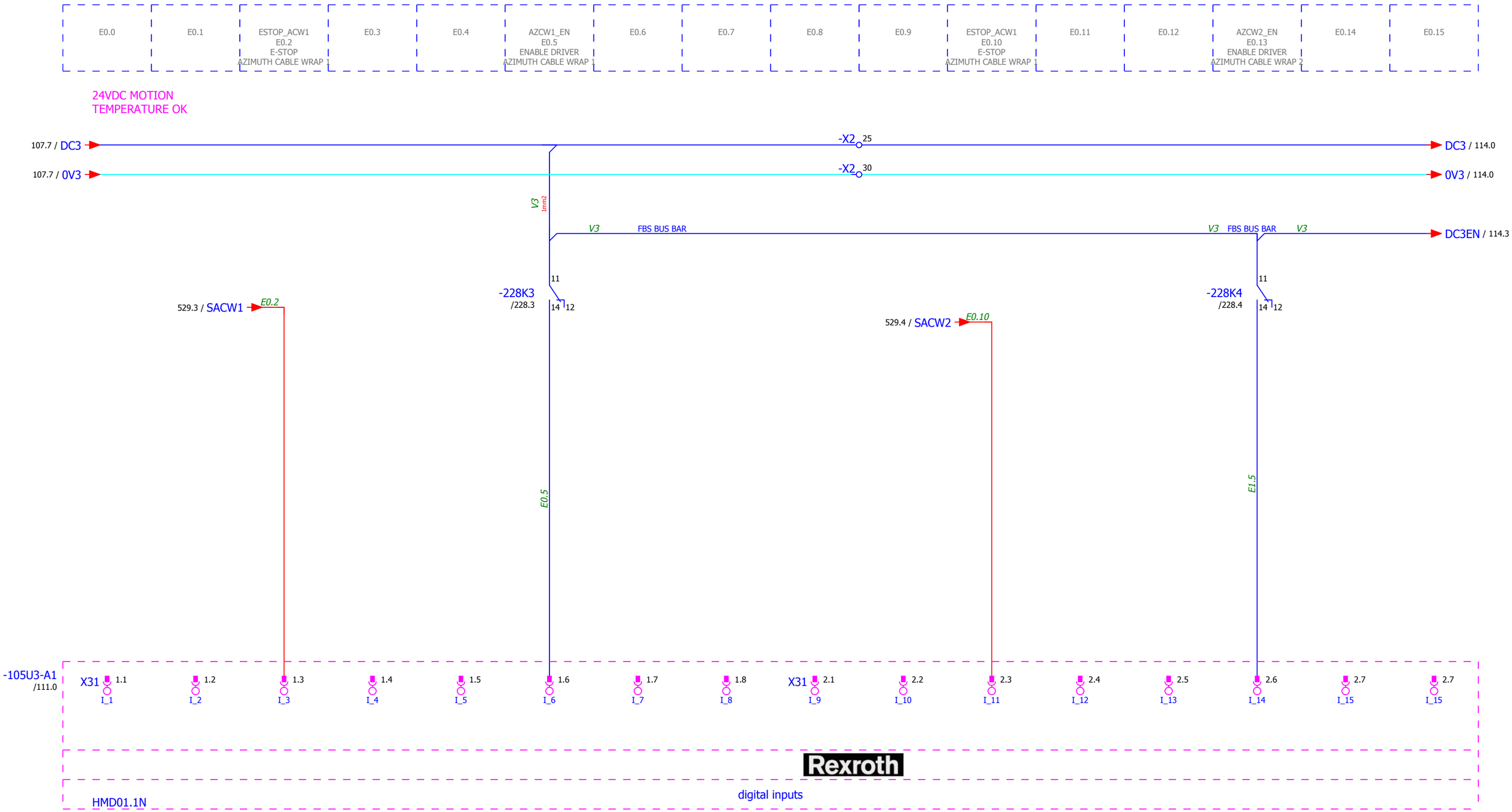

IK4 TEKNIKER Research Alliance

IK4-TEKNIKER
AVDA. OTAOLA 20
20600 Eibar (Gipuzkoa) Spain
Tfno.:(+34) 943 206744
Fax: (+34) 943 202757
Web: www.tekniker.es

Date	28/11/2017						
Reviewed	F.LÓPEZ	2.3	15/12/2017	JOSE MANUEL			
Drew by	JOSE MANUEL	Review	Date	Name	Review	Date	Name

3151_LSST

MCS Design Electrical Schematics

LSST TELESCOPE

Replaces

Replaced by

CONTROL MOTOR 1 AZIMUTH CABLE WRAP

Customer:

EMPRESARIOS AGRUPADOS

C/Magallanes, 3
28015 MADRID
91 3098000

http://www.empresariosagrupados.es/

= E1

+ TMA-AZ-CS-CBT-0001

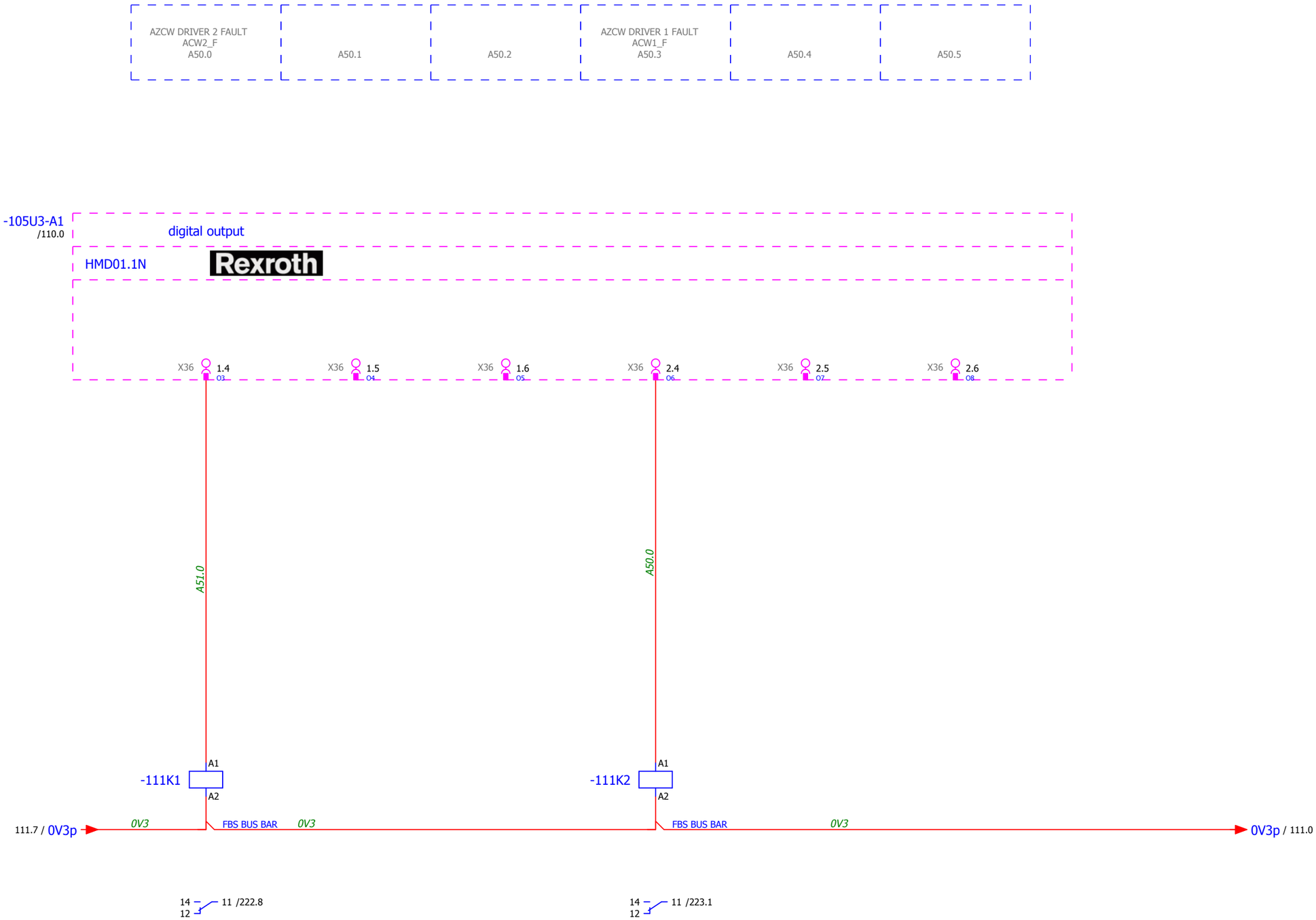

◁ 110

112 ▷

IK4 TEKNIKER Research Alliance
IK4-TEKNIKER
AVDA. OTAOLA 20
20600 Eibar (Gipuzkoa) Spain
Tfno.:(+34) 943 206744
Fax: (+34) 943 202757
Web: www.tekniker.es

Date	23/02/2017						
Reviewed	F.LÓPEZ	2.3	15/12/2017	JOSE MANUEL			
Drew by	jcastano	Review	Date	Name	Review	Date	Name

3151_LSST
MCS Design Electrical Schematics
LSST TELESCOPE

Replaces | Replaced by

CONTROL MOTOR 2 AZIMUTH CABLE WRAP

Customer:
EMPRESARIOS AGRUPADOS
C/Magallanes, 3
28015 MADRID
91 3098000
http://www.empresariosagrupados.es/

= E1
+ TMA-AZ-CS-CBT-0001

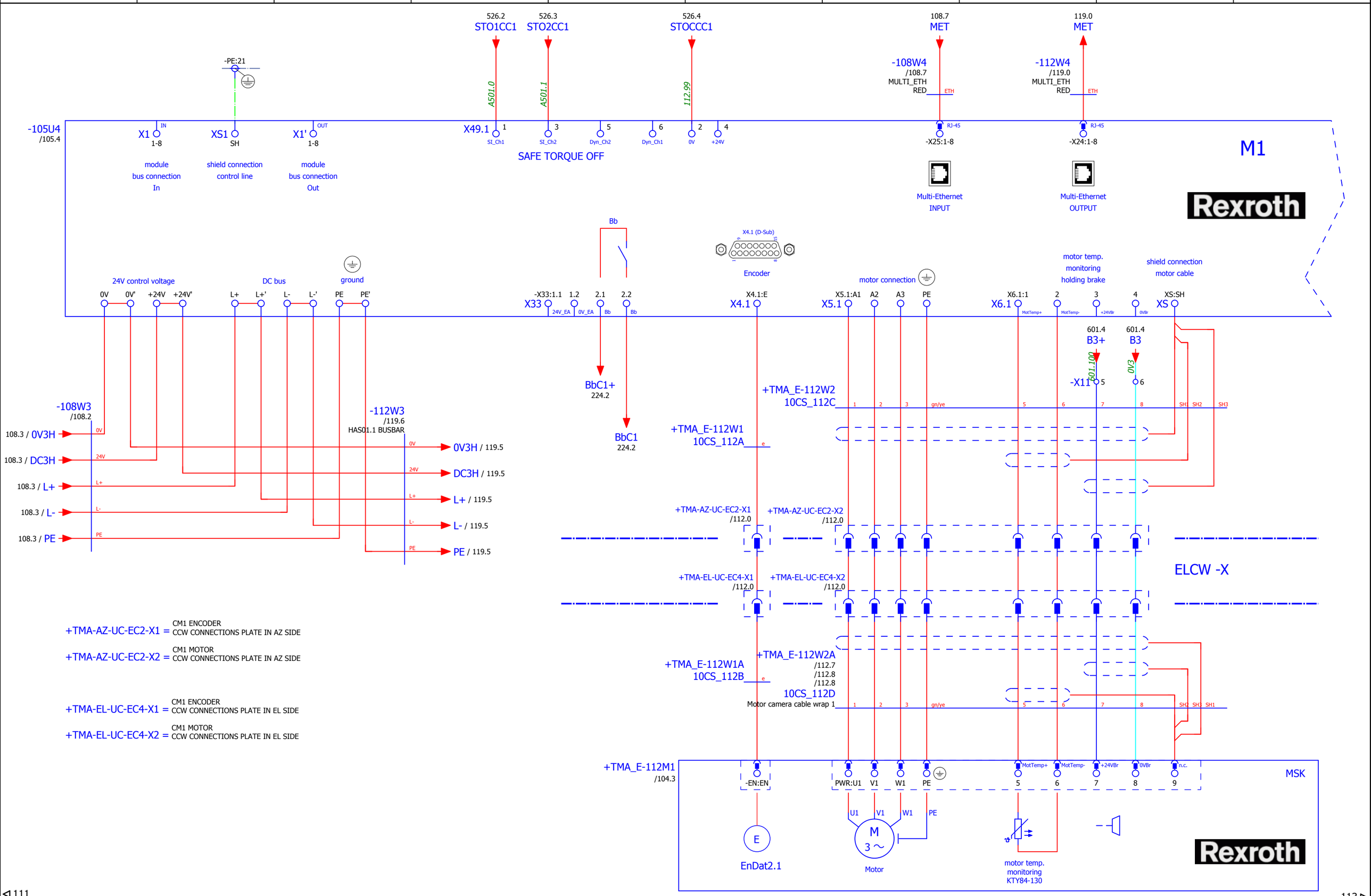

+TMA-AZ-UC-EC2-X1 = CM1 ENCODER CCW CONNECTIONS PLATE IN AZ SIDE

+TMA-AZ-UC-EC2-X2 = CM1 MOTOR CCW CONNECTIONS PLATE IN AZ SIDE

+TMA-EL-UC-EC4-X1 = CM1 ENCODER CCW CONNECTIONS PLATE IN EL SIDE

+TMA-EL-UC-EC4-X2 = CM1 MOTOR CCW CONNECTIONS PLATE IN EL SIDE

IK4 TEKNIKER Research Alliance
IK4-TEKNIKER
AVDA. OTAOLA 20
20600 Eibar (Gipuzkoa) Spain
Tfno.:(+34) 943 206744
Fax: (+34) 943 202757
Web: www.tekniker.es

Date	15/12/2017							
Reviewed	F.LÓPEZ	2.3	15/12/2017	JOSE MANUEL				
Drew by	JOSE MANUEL	Review	Date	Name	Review	Date	Name	

3151_LSST

MCS Design Electrical Schematics

LSST TELESCOPE

Replaces | Replaced by

POWER MOTOR 1 CAMERA CABLE WRAP

Customer: EMPRESARIOS AGRUPADOS
C/Magallanes, 3
28015 MADRID
91 3098000
http://www.empresariosagrupados.es/

= E1

+ TMA-AZ-CS-CBT-0001

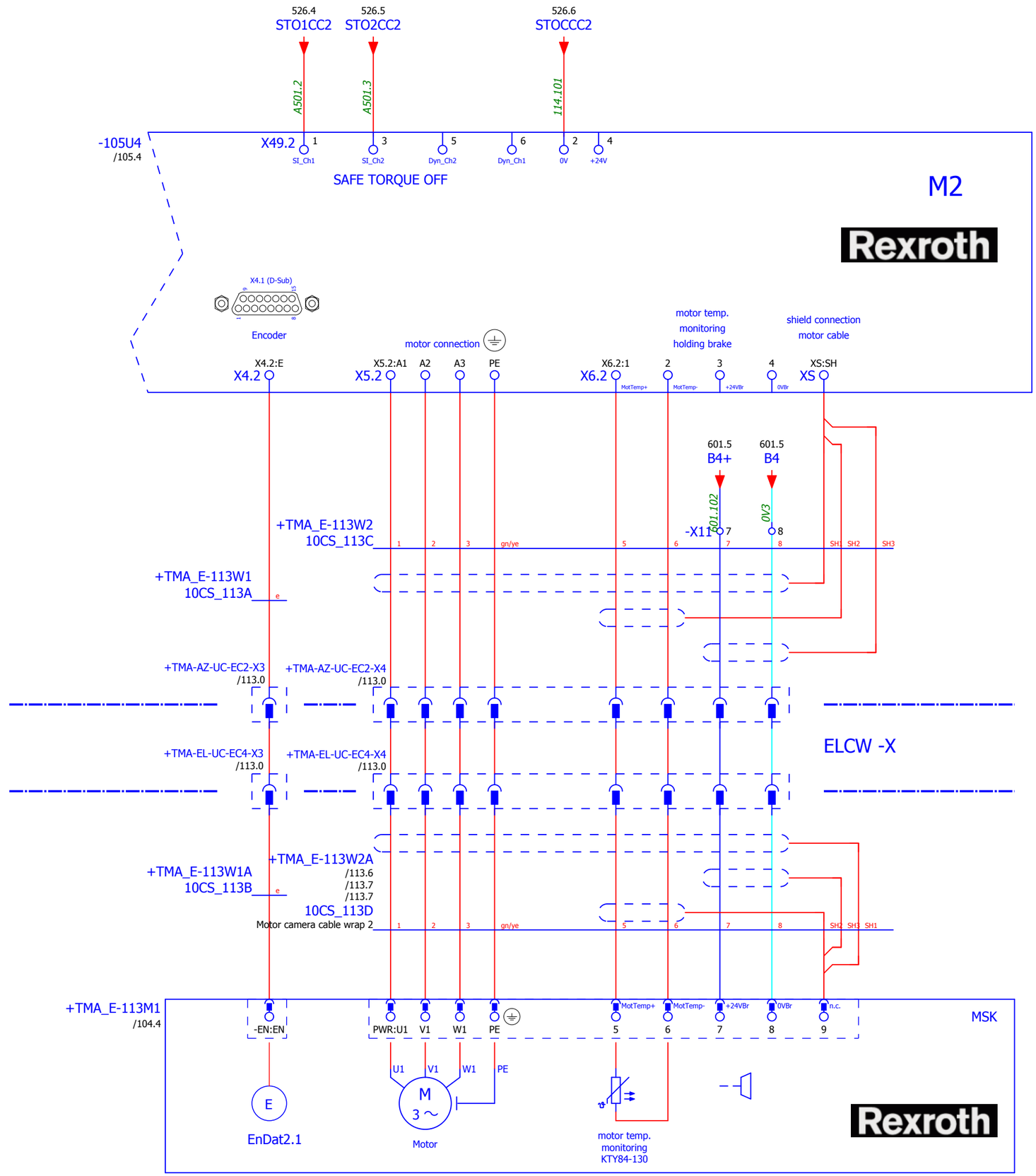

◁ 112

114 ▷

IK4-TEKNIKER
AVDA. OTAOLA 20
20600 Eibar (Gipuzkoa) Spain
Tfno.:(+34) 943 206744
Fax: (+34) 943 202757
Web: www.tekniker.es

Date	15/12/2017						
Reviewed	F.LÓPEZ	2.3	15/12/2017	JOSE MANUEL			
Drew by	JOSE MANUEL	Review	Date	Name	Review	Date	Name

3151_LSST
MCS Design Electrical Schematics
LSST TELESCOPE
Replaces
Replaced by

POWER MOTOR 2 CAMERA CABLE WRAP

Customer: EMPRESARIOS AGRUPADOS
C/Magallanes, 3
28015 MADRID
91 3098000
http://www.empresariosagrupados.es/

= E1
+ TMA-AZ-CS-CBT-0001

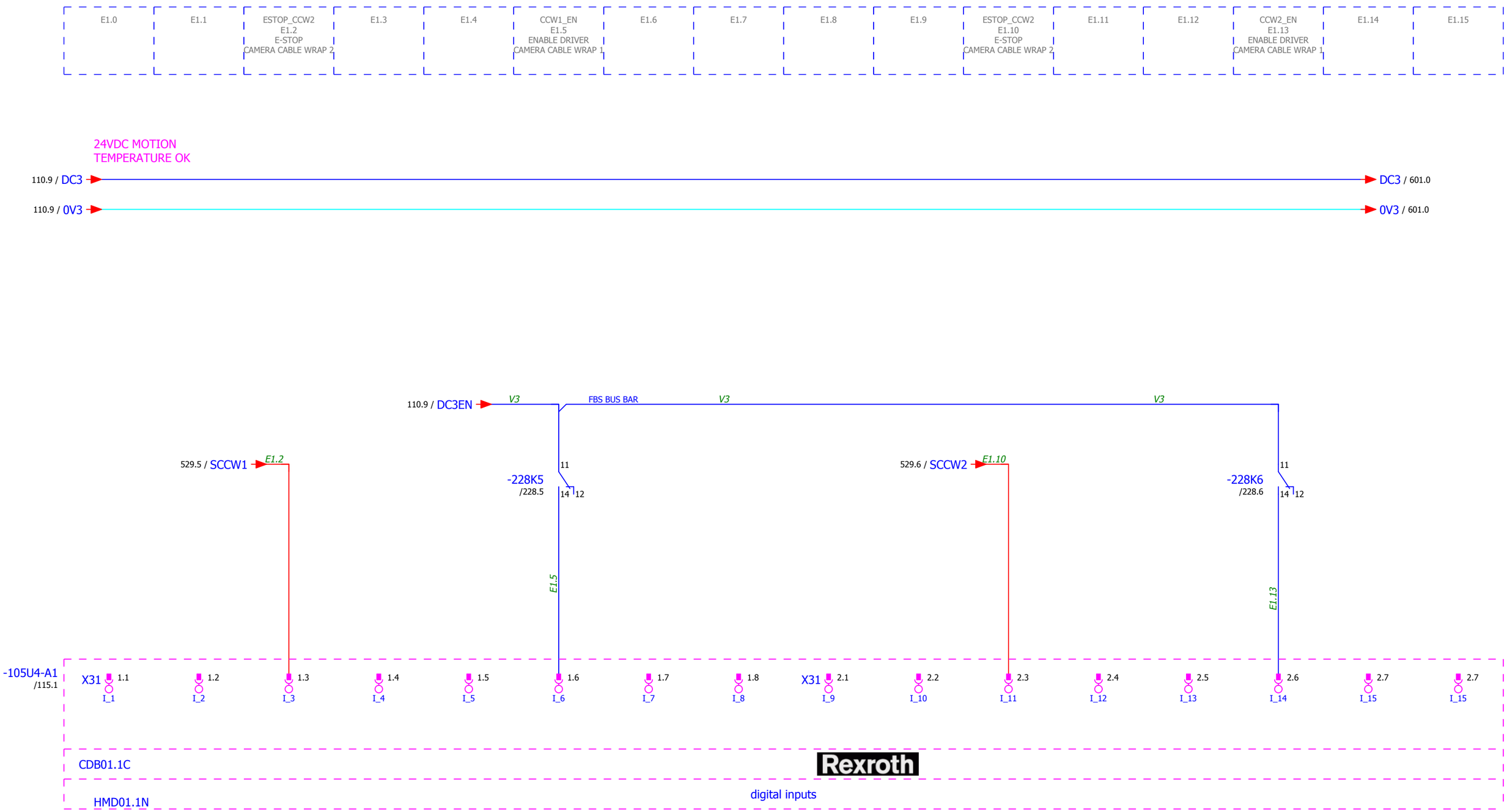

IK4 TEKNIKER Research Alliance
IK4-TEKNIKER
AVDA. OTAOLA 20
20600 Eibar (Gipuzkoa) Spain
Tfno.:(+34) 943 206744
Fax: (+34) 943 202757
Web: www.tekniker.es

Date	23/02/2017						
Reviewed	F.LÓPEZ	2.3	15/12/2017	JOSE MANUEL			
Drew by	jcastano	Review	Date	Name	Review	Date	Name

3151_LSST

MCS Design Electrical Schematics

LSST TELESCOPE

Replaces

Replaced by

CONTROL MOTOR 1 CAMERA CABLE WRAP

Customer:

EMPRESARIOS AGRUPADOS

EMPRESARIOS AGRUPADOS
C/Magallanes, 3
28015 MADRID
91 3098000
http://www.empresariosagrupados.es/

= E1

+ TMA-AZ-CS-CBT-0001

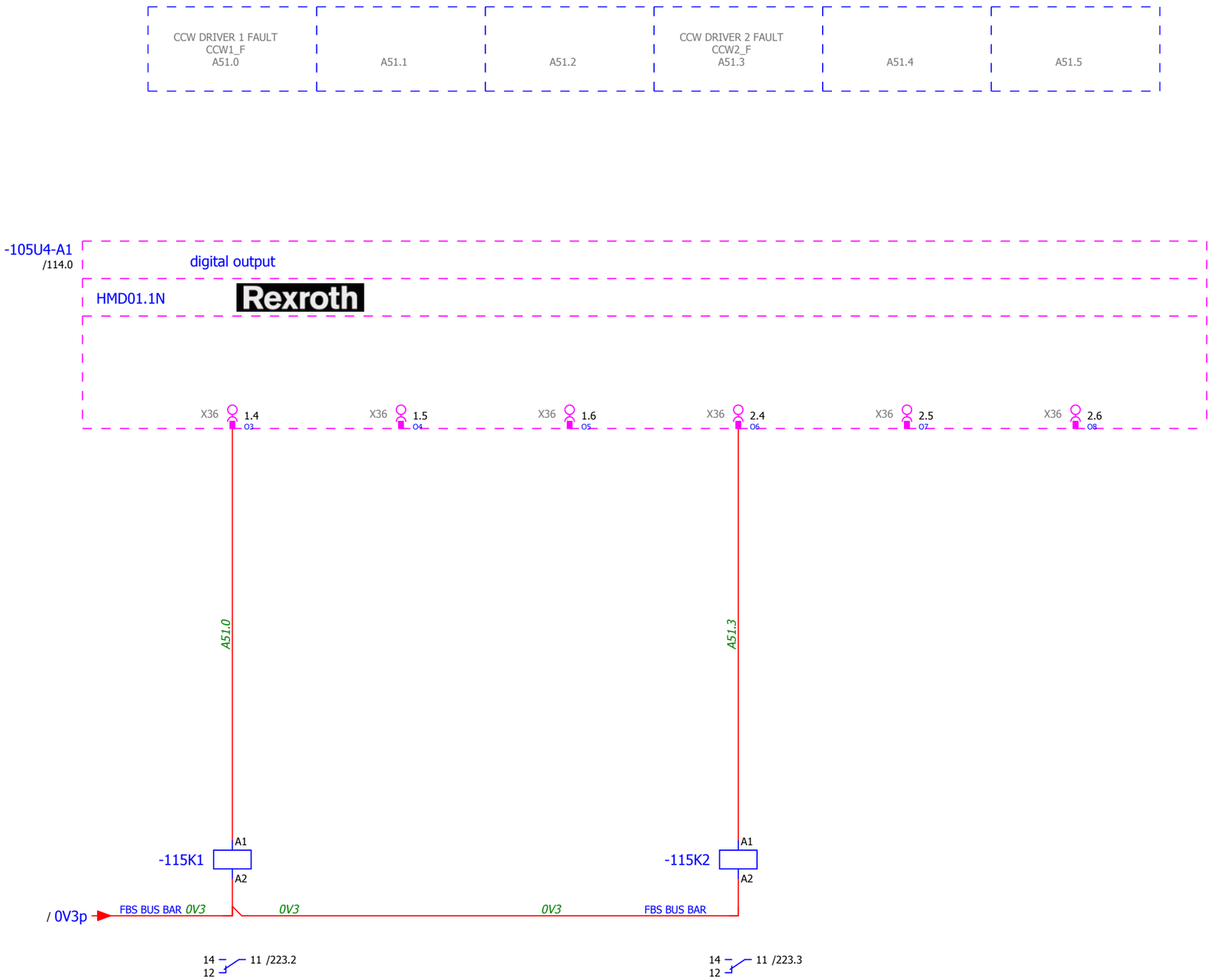

IK4-TEKNIKER
AVDA. OTAOLA 20
20600 Eibar (Gipuzkoa) Spain
Tfno.:(+34) 943 206744
Fax: (+34) 943 202757
Web: www.tekniker.es

Date	23/02/2017						
Reviewed	F.LÓPEZ	2.3	15/12/2017	JOSE MANUEL			
Drew by	jcastano	Review	Date	Name	Review	Date	Name

3151_LSST

MCS Design Electrical Schematics

LSST TELESCOPE

Replaces

Replaced by

CONTROL MOTOR 2 CAMERA CABLE

Customer:

EMPRESARIOS AGRUPADOS
C/Magallanes, 3
28015 MADRID
91 3098000
http://www.empresariosagrupados.es/

= E1

+ TMA-AZ-CS-CBT-0001

Page 115
Total number 710

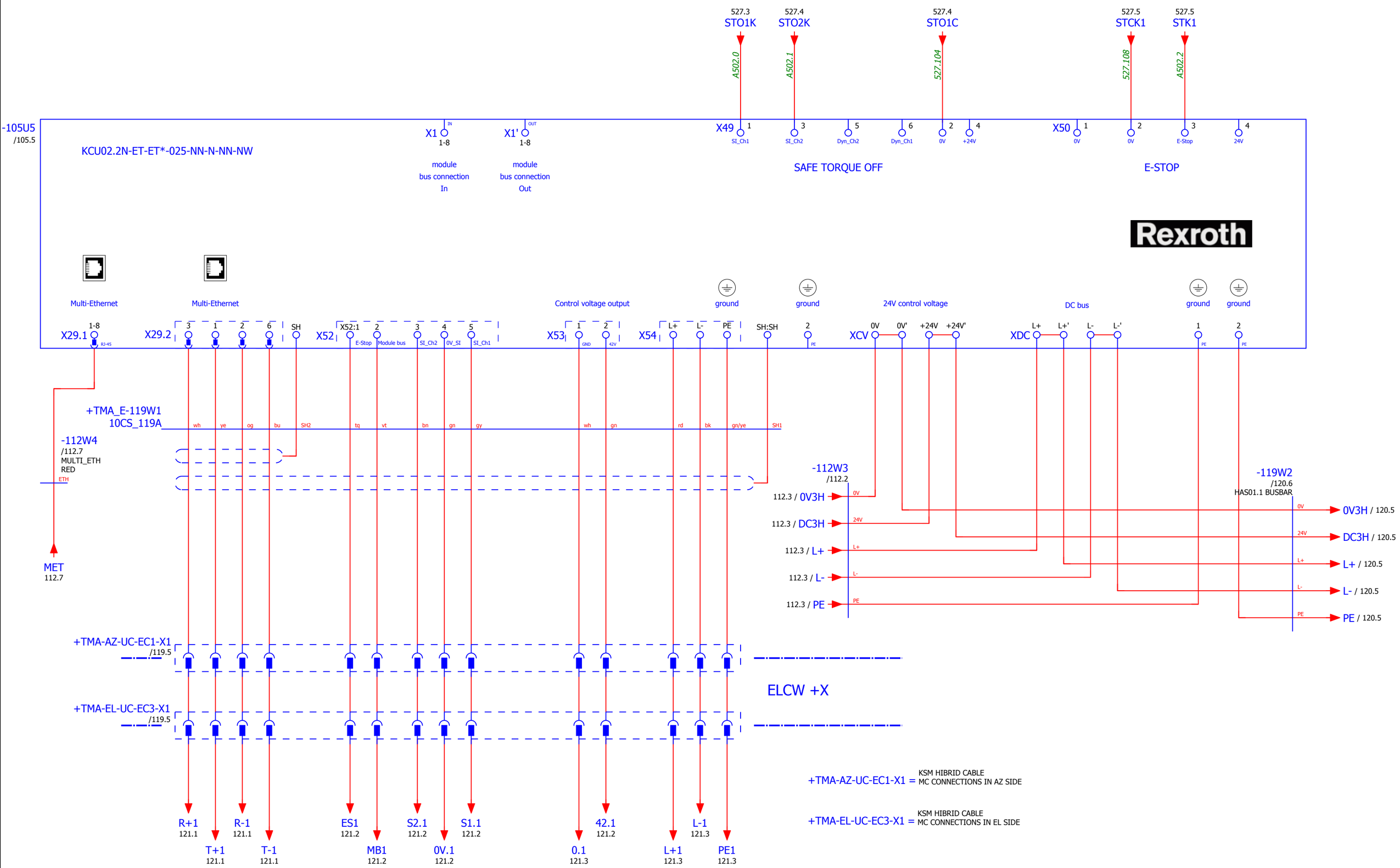

IK4 TEKNIKER Research Alliance
IK4-TEKNIKER
AVDA. OTAOLA 20
20600 Eibar (Gipuzkoa) Spain
Tfno.:(+34) 943 206744
Fax: (+34) 943 202757
Web: www.tekniker.es

Date	15/12/2017						
Reviewed	F.LÓPEZ	2.3	15/12/2017	JOSE MANUEL			
Drew by	JOSE MANUEL	Review	Date	Name	Review	Date	Name

3151_LSST
MCS Design Electrical Schematics
LSST TELESCOPE
Replaces
Replaced by

POWER KCU+KSM02 SYSTEM

Customer: EMPRESARIOS AGRUPADOS
C/Magallanes, 3
28015 MADRID
91 3098000
http://www.empresariosagrupados.es/

= E1
+ TMA-AZ-CS-CBT-0001

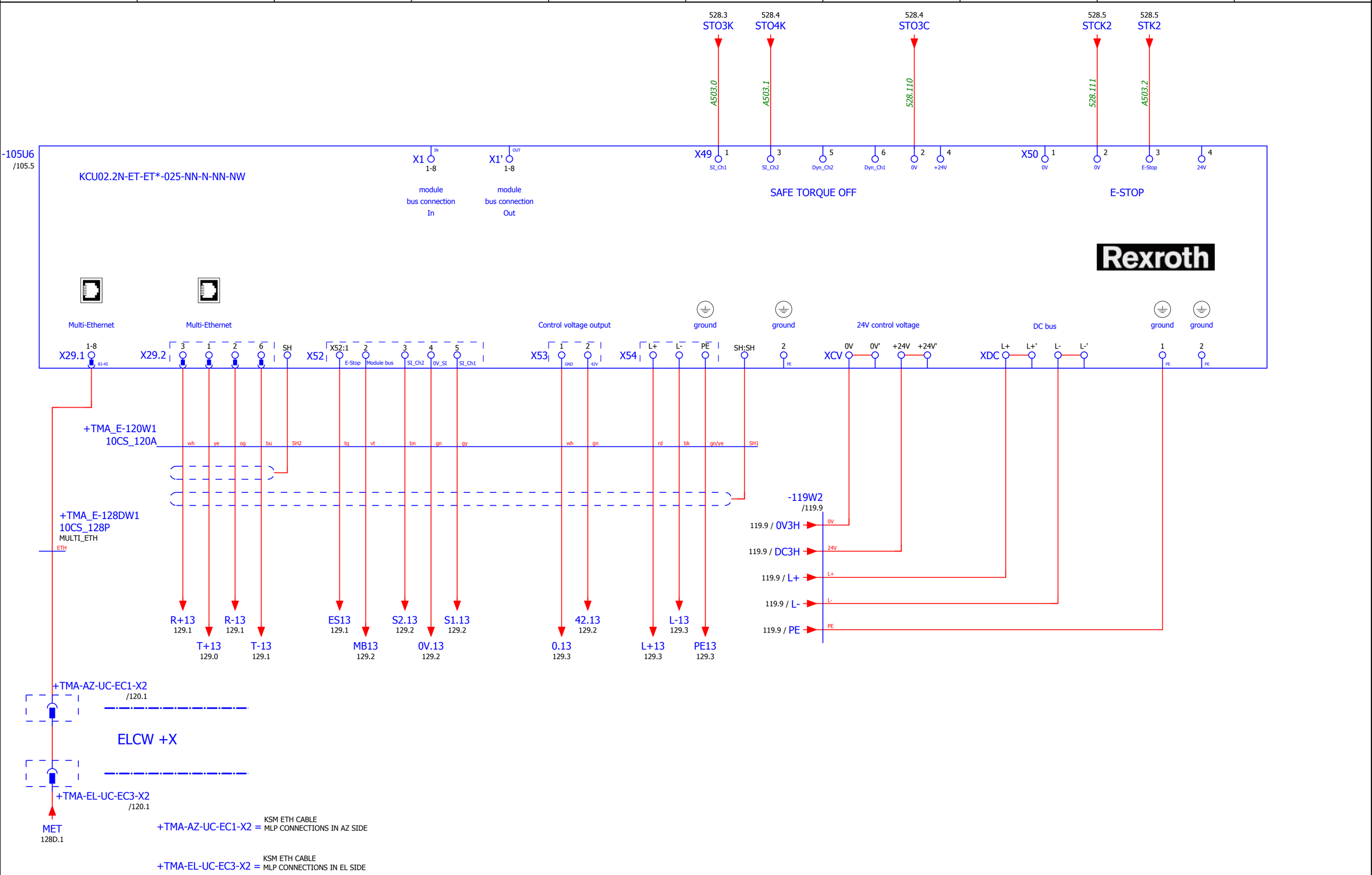

IK4 TEKNIKER Research Alliance
IK4-TEKNIKER
AVDA. OTAOLA 20
20600 Eibar (Gipuzkoa) Spain
Tfno.:(+34) 943 206744
Fax: (+34) 943 202757
Web: www.tekniker.es

Date	15/12/2017							
Reviewed	F.LÓPEZ	2.3	15/12/2017	JOSE MANUEL				
Drew by	JOSE MANUEL	Review	Date	Name	Review	Date	Name	

3151_LSST
MCS Design Electrical Schematics
LSST TELESCOPE
Replaces
Replaced by

POWER KCU+KSM02 SYSTEM

Customer: EMPRESARIOS AGRUPADOS
C/Magallanes, 3
28015 MADRID
91 3098000
http://www.empresariosagrupados.es/

= E1
+ TMA-AZ-CS-CBT-0001

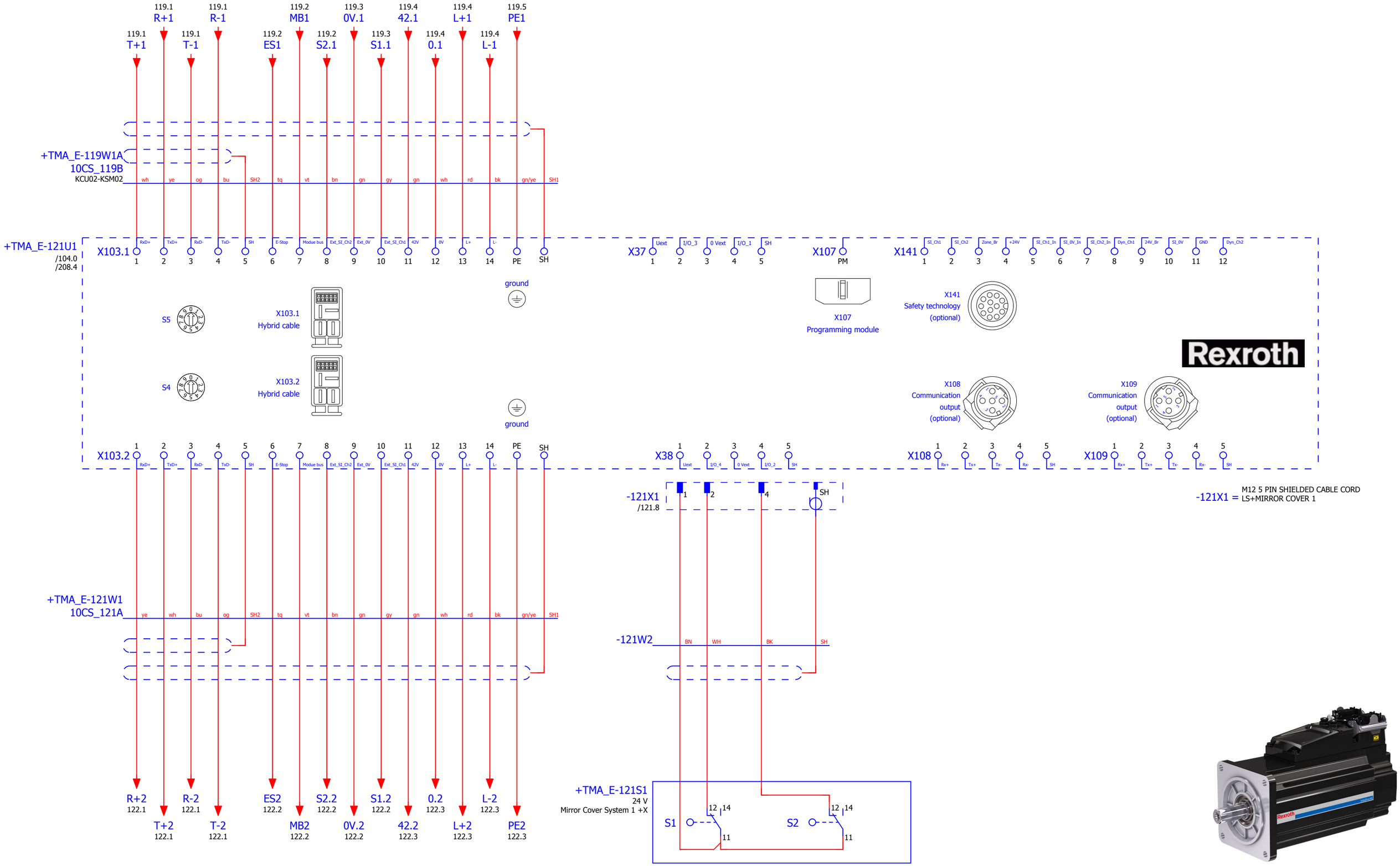

IK4-TEKNIKER
AVDA. OTAOLA 20
20600 Eibar (Gipuzkoa) Spain
Tfno.:(+34) 943 206744
Fax: (+34) 943 202757
Web: www.tekniker.es

Date	15/12/2017						
Reviewed	F.LÓPEZ	2.3	15/12/2017	JOSE MANUEL			
Drew by	JOSE MANUEL	Review	Date	Name	Review	Date	Name

3151_LSST
MCS Design Electrical Schematics
LSST TELESCOPE

Replaces | Replaced by

Mirror Cover System 1
X+

Customer: EMPRESARIOS AGRUPADOS
C/Magallanes, 3
28015 MADRID
91 3098000
http://www.empresariosagrupados.es/

= E1
+ TMA-AZ-CS-CBT-0001

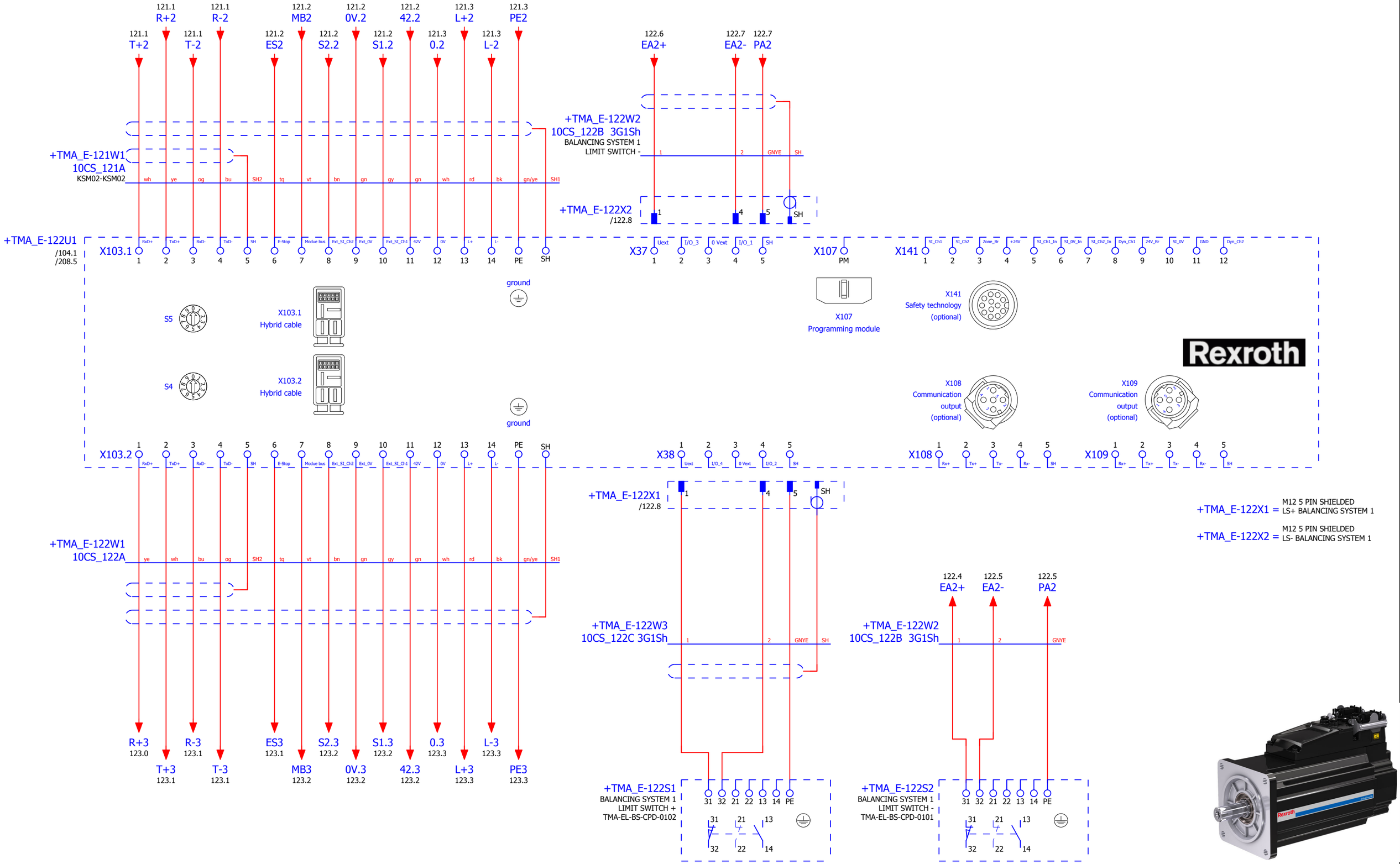

IK4 TEKNIKER Research Alliance

IK4-TEKNIKER
AVDA. OTAOLA 20
20600 Eibar (Gipuzkoa) Spain
Tfno.:(+34) 943 206744
Fax: (+34) 943 202757
Web: www.tekniker.es

Date	15/12/2017							
Reviewed	F.LÓPEZ	2.3	15/12/2017	JOSE MANUEL				
Drew by	JOSE MANUEL	Review	Date	Name	Review	Date	Name	

3151_LSST

MCS Design Electrical Schematics

LSST TELESCOPE

Replaces | Replaced by

BALANCING SYSTEM 1
+X

Customer: EMPRESARIOS AGRUPADOS
C/Magallanes, 3
28015 MADRID
91 3098000
http://www.empresariosagrupados.es/

= E1
+ TMA-AZ-CS-CBT-0001

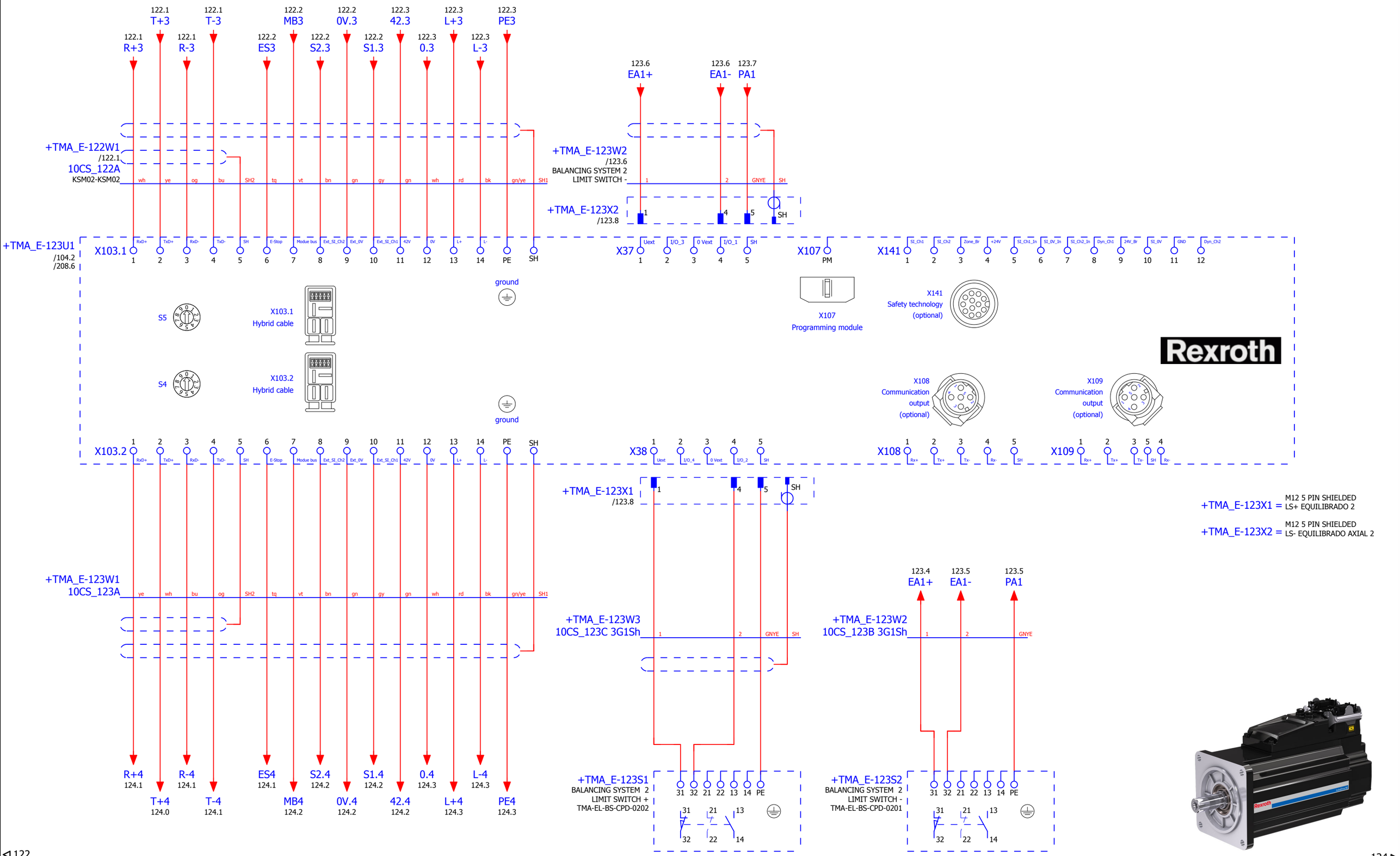

IK4-TEKNIKER
AVDA. OTAOLA 20
20600 Eibar (Gipuzkoa) Spain
Tfno.:(+34) 943 206744
Fax: (+34) 943 202757
Web: www.tekniker.es

Date	15/12/2017						
Reviewed	F.LÓPEZ	2.3	15/12/2017	JOSE MANUEL			
Drew by	JOSE MANUEL	Review	Date	Name	Review	Date	Name

3151_LSST

MCS Design Electrical Schematics

LSST TELESCOPE

Replaces | Replaced by

BALANCING SYSTEM 2
+X

Customer: EMPRESARIOS AGRUPADOS
C/Magallanes, 3
28015 MADRID
91 3098000
http://www.empresariosagrupados.es/

= E1
+ TMA-AZ-CS-CBT-0001

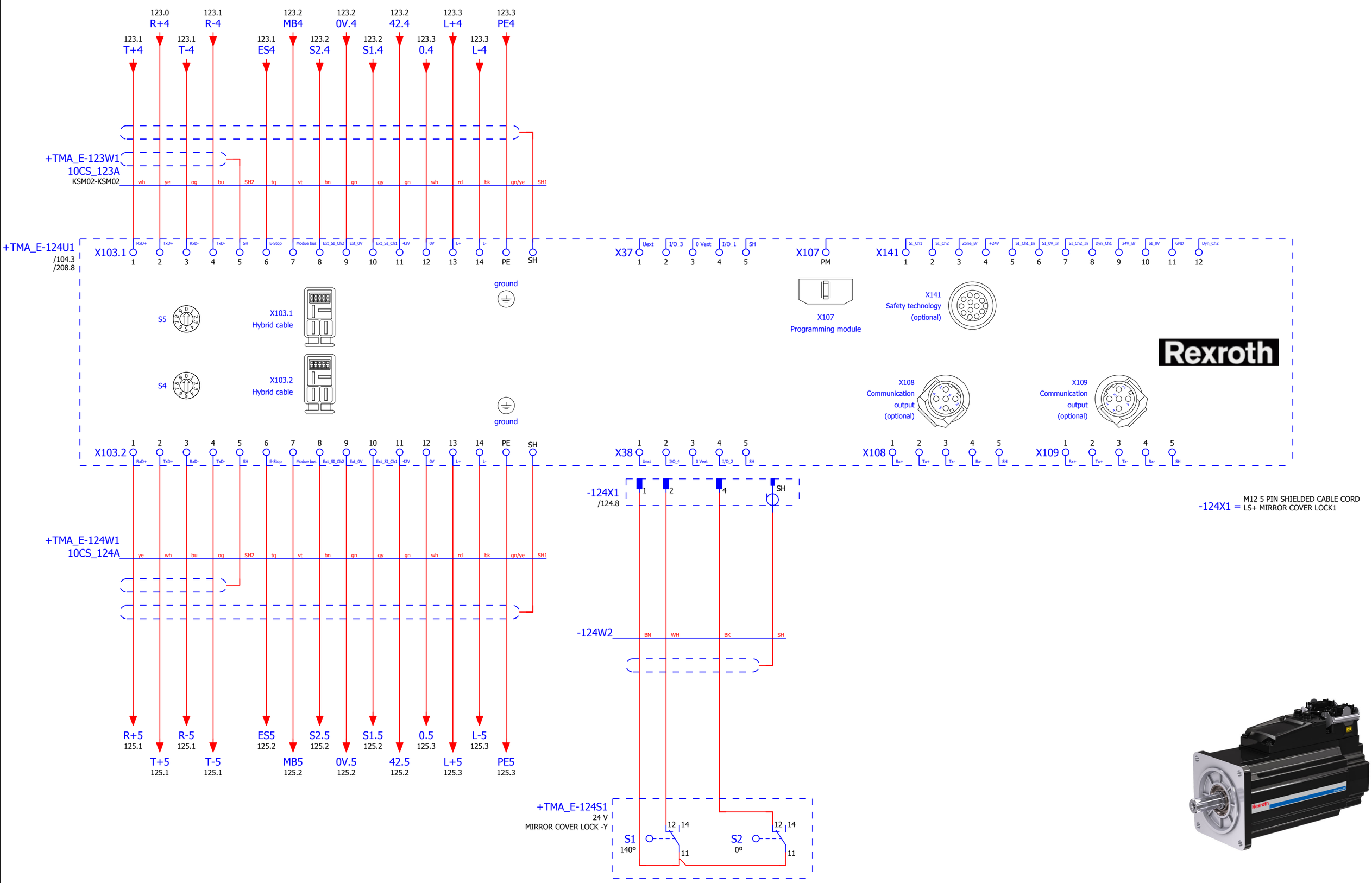

◁ 123

125 ▷

IK4-TEKNIKER
AVDA. OTAOLA 20
20600 Eibar (Gipuzkoa) Spain
Tfno.:(+34) 943 206744
Fax: (+34) 943 202757
Web: www.tekniker.es

Date	15/12/2017						
Reviewed	F.LÓPEZ	2.3	15/12/2017	JOSE MANUEL			
Drew by	JOSE MANUEL	Review	Date	Name	Review	Date	Name

3151_LSST
MCS Design Electrical Schematics
LSST TELESCOPE

Replaces | Replaced by

MIRROR COVER LOCK 1
-Y

Customer: EMPRESARIOS AGRUPADOS
C/Magallanes, 3
28015 MADRID
91 3098000
http://www.empresariosagrupados.es/

= E1
+ TMA-AZ-CS-CBT-0001

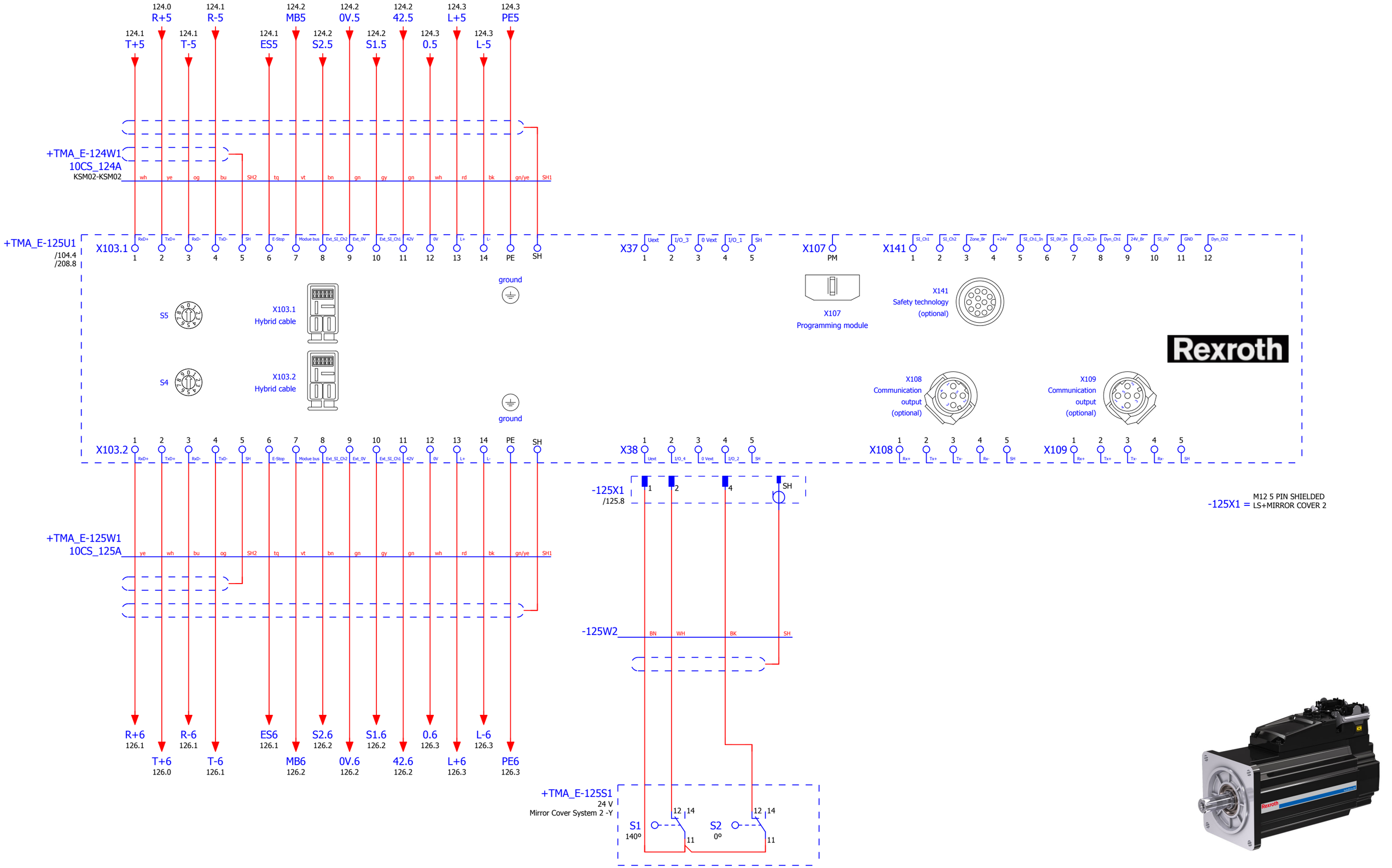

◁ 124

126 ▷

IK4-TEKNIKER
AVDA. OTAOLA 20
20600 Eibar (Gipuzkoa) Spain
Tfno.:(+34) 943 206744
Fax: (+34) 943 202757
Web: www.tekniker.es

Date	15/12/2017						
Reviewed	F.LÓPEZ	2.3	15/12/2017	JOSE MANUEL			
Drew by	JOSE MANUEL	Review	Date	Name	Review	Date	Name

3151_LSST
MCS Design Electrical Schematics
LSST TELESCOPE

Replaces | Replaced by

Mirror Cover System 2
-Y

Customer: EMPRESARIOS AGRUPADOS
C/Magallanes, 3
28015 MADRID
91 3098000
http://www.empresariosagrupados.es/

= E1
+ TMA-AZ-CS-CBT-0001

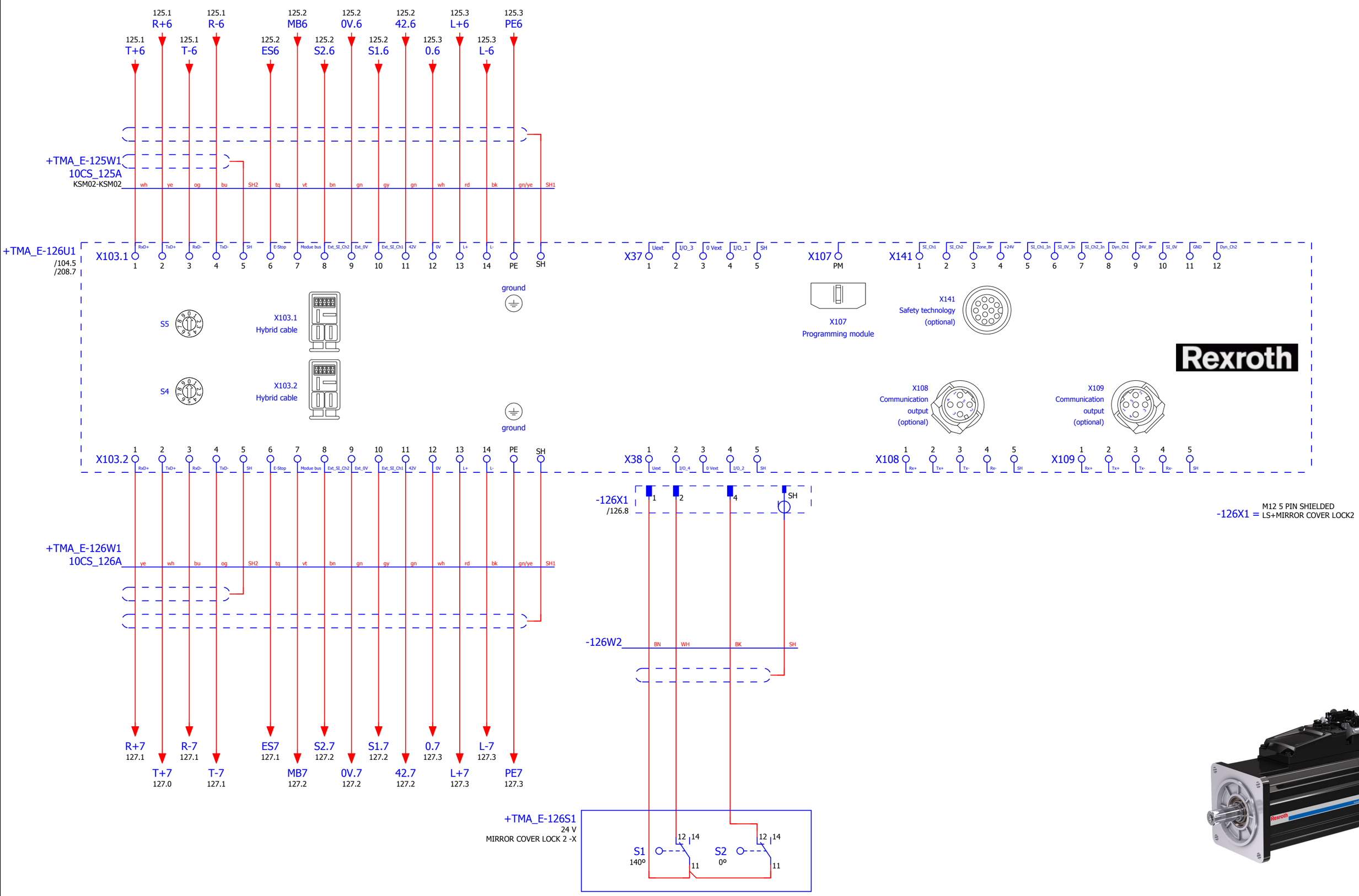

IK4-TEKNIKER
AVDA. OTAOLA 20
20600 Eibar (Gipuzkoa) Spain
Tfno.:(+34) 943 206744
Fax: (+34) 943 202757
Web: www.tekniker.es

Date	15/12/2017						
Reviewed	F.LÓPEZ	2.3	15/12/2017	JOSE MANUEL			
Drew by	JOSE MANUEL	Review	Date	Name	Review	Date	Name

3151_LSST
MCS Design Electrical Schematics
LSST TELESCOPE

Replaces | Replaced by

MIRROR COVER LOCK 2
-X

Customer: EMPRESARIOS AGRUPADOS
C/Magallanes, 3
28015 MADRID
91 3098000
http://www.empresariosagrupados.es/

= E1
+ TMA-AZ-CS-CBT-0001

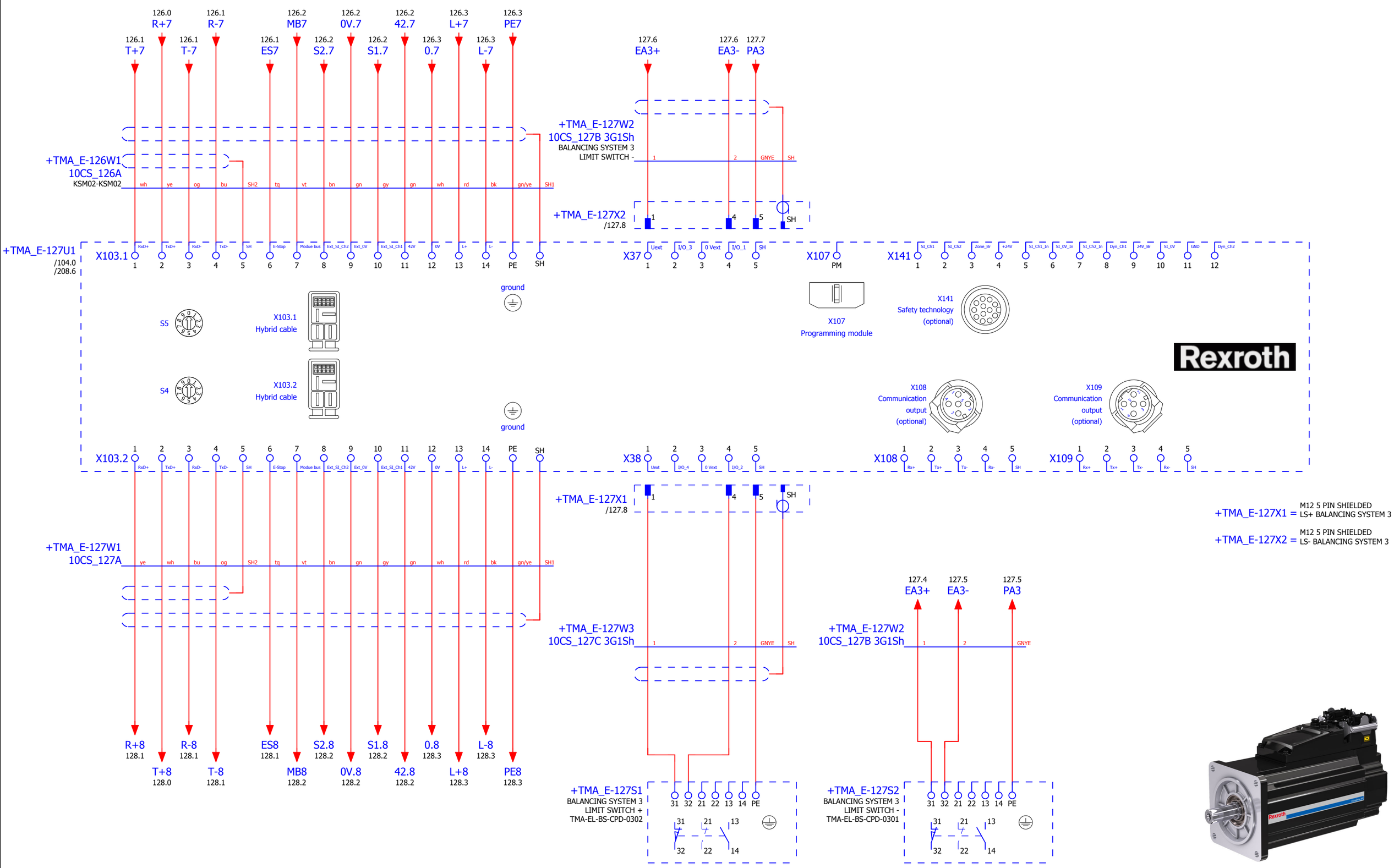

◁ 126

128 ▷

IK4-TEKNIKER
AVDA. OTAOLA 20
20600 Eibar (Gipuzkoa) Spain
Tfno.:(+34) 943 206744
Fax: (+34) 943 202757
Web: www.tekniker.es

Date	15/12/2017						
Reviewed	F.LÓPEZ	2.3	15/12/2017	JOSE MANUEL			
Drew by	JOSE MANUEL	Review	Date	Name	Review	Date	Name

3151_LSST
MCS Design Electrical Schematics
LSST TELESCOPE
Replaces
Replaced by

AXIAL BALANCING SYSTEM 3
-X

Customer: EMPRESARIOS AGRUPADOS
C/Magallanes, 3
28015 MADRID
91 3098000
http://www.empresariosagrupados.es/

= E1
+ TMA-AZ-CS-CBT-0001

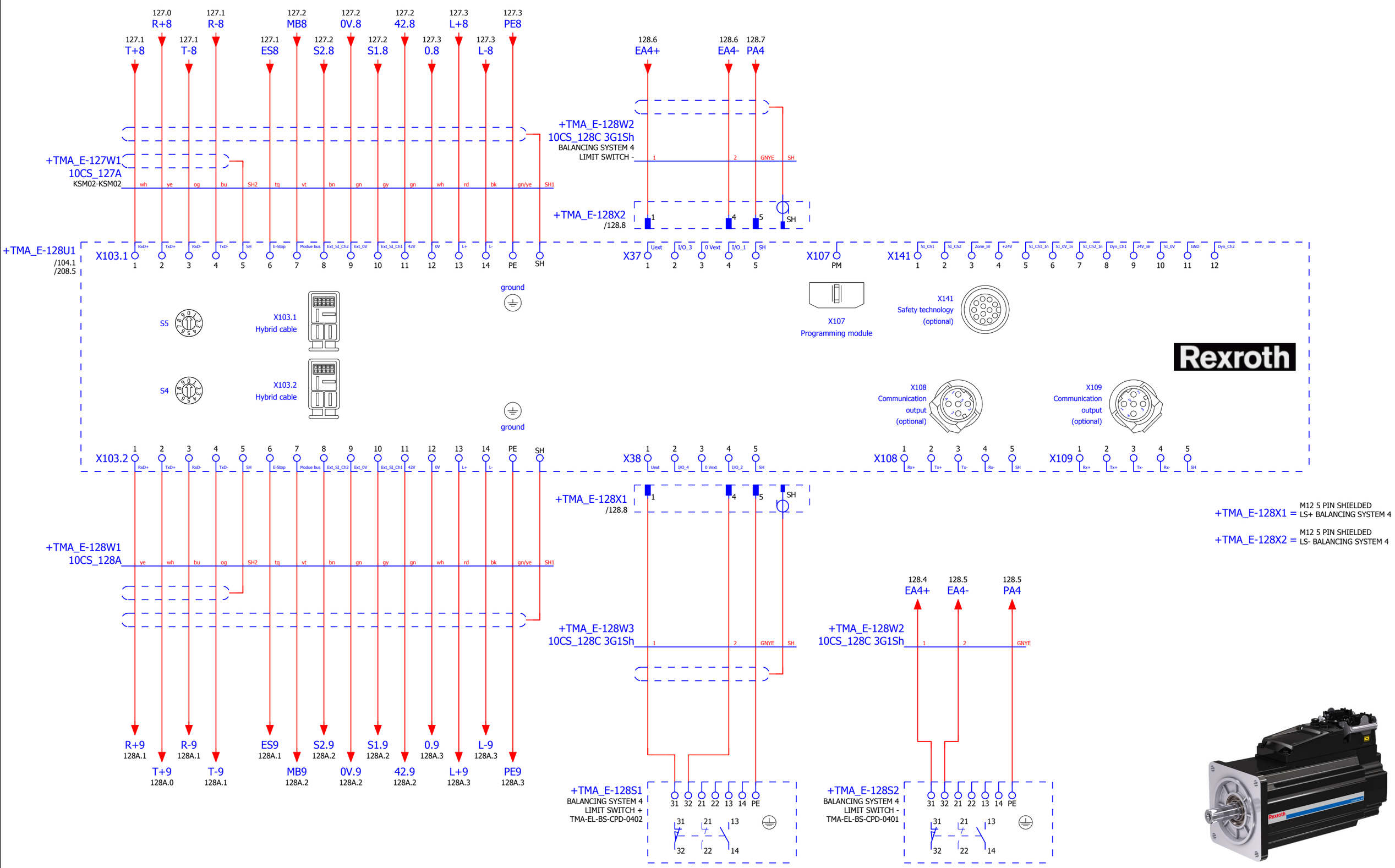

IK4-TEKNIKER
AVDA. OTAOLA 20
20600 Eibar (Gipuzkoa) Spain
Tfno.:(+34) 943 206744
Fax: (+34) 943 202757
Web: www.tekniker.es

Date	15/12/2017						
Reviewed	F.LÓPEZ	2.3	15/12/2017	JOSE MANUEL			
Drew by	JOSE MANUEL	Review	Date	Name	Review	Date	Name

3151_LSST
MCS Design Electrical Schematics
LSST TELESCOPE
Replaces
Replaced by

AXIAL BALANCING SYSTEM 4
-X

Customer: EMPRESARIOS AGRUPADOS
C/Magallanes, 3
28015 MADRID
91 3098000
http://www.empresariosagrupados.es/

= E1
+ TMA-AZ-CS-CBT-0001

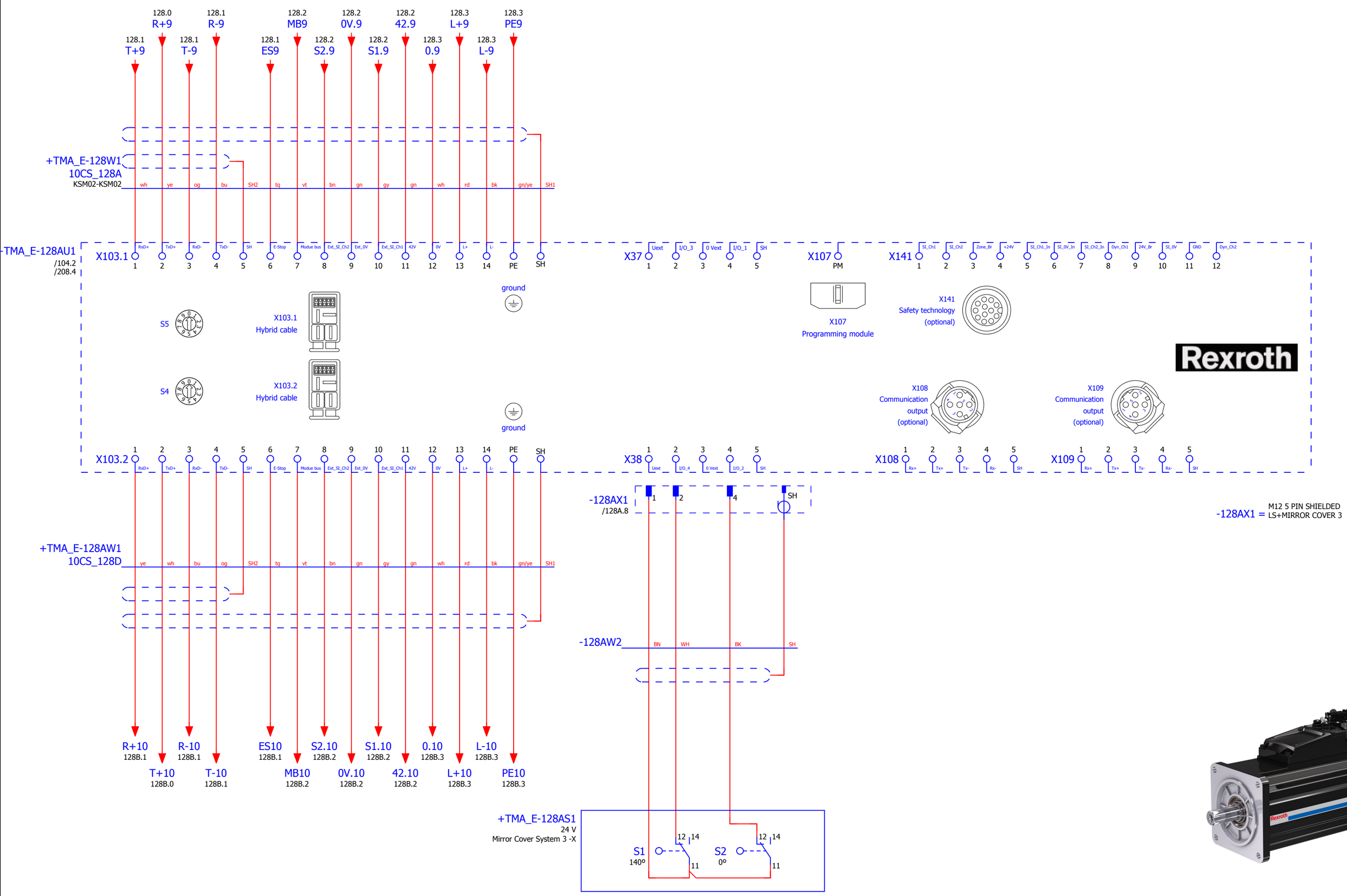

◁ 128

128B ▷

IK4-TEKNIKER
AVDA. OTAOLA 20
20600 Eibar (Gipuzkoa) Spain
Tfno.:(+34) 943 206744
Fax: (+34) 943 202757
Web: www.tekniker.es

Date	15/12/2017							
Reviewed	F.LÓPEZ	2.3	15/12/2017	JOSE MANUEL				
Drew by	JOSE MANUEL	Review	Date	Name	Review	Date	Name	

3151_LSST
MCS Design Electrical Schematics
LSST TELESCOPE

Replaces | Replaced by

Mirror Cover System 3
-X

Customer: EMPRESARIOS AGRUPADOS
C/Magallanes, 3
28015 MADRID
91 3098000
http://www.empresariosagrupados.es/

= E1
+ TMA-AZ-CS-CBT-0001

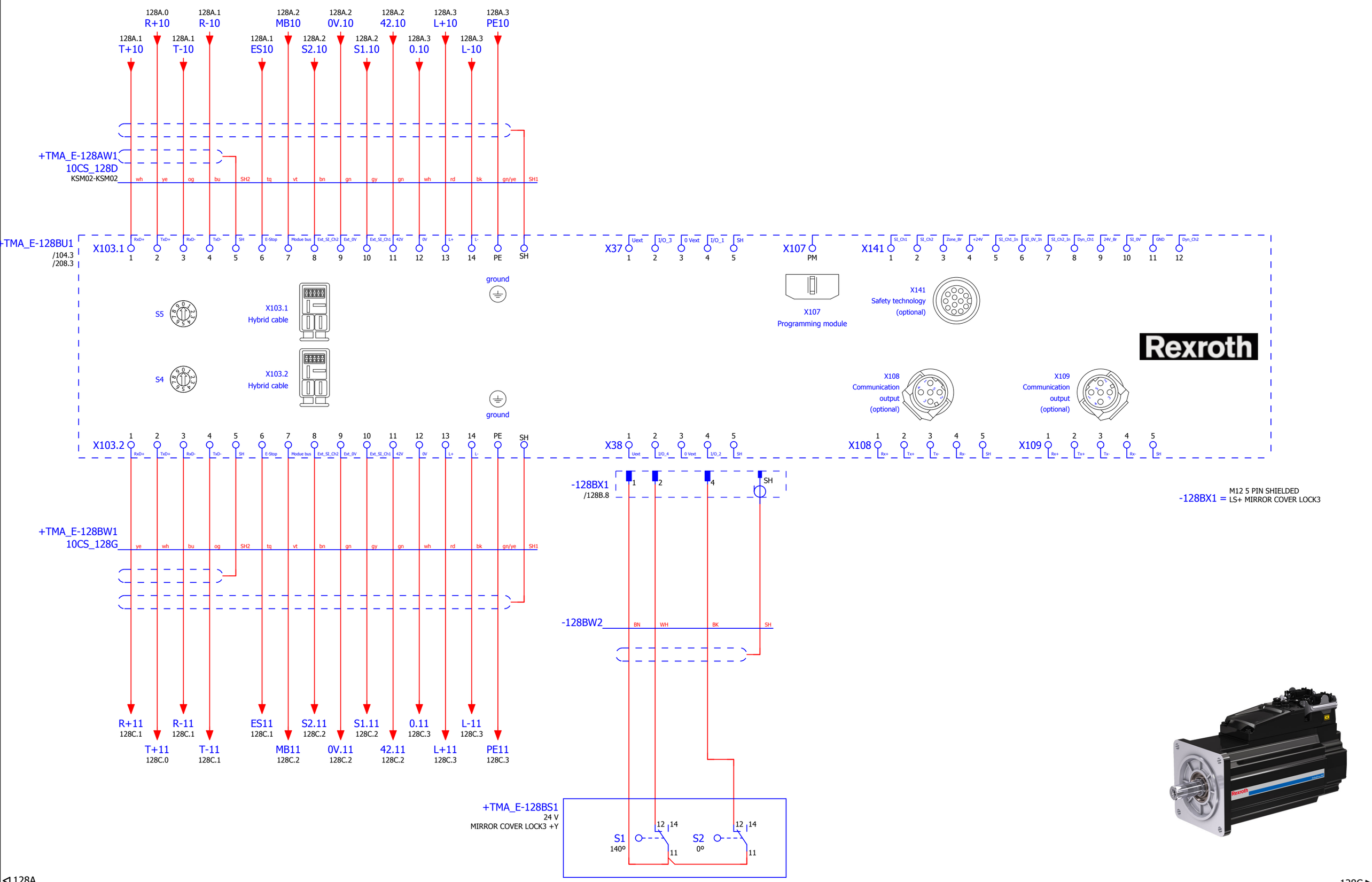

◁ 128A

128C ▷

IK4-TEKNIKER
AVDA. OTAOLA 20
20600 Eibar (Gipuzkoa) Spain
Tfno.:(+34) 943 206744
Fax: (+34) 943 202757
Web: www.tekniker.es

Date	15/12/2017						
Reviewed	F.LÓPEZ	2.3	15/12/2017	JOSE MANUEL			
Drew by	JOSE MANUEL	Review	Date	Name	Review	Date	Name

3151_LSST
MCS Design Electrical Schematics
LSST TELESCOPE

Replaces | Replaced by

MIRROR COVER LOCK 3
+Y

Customer: EMPRESARIOS AGRUPADOS
C/Magallanes, 3
28015 MADRID
91 3098000
http://www.empresariosagrupados.es/

= E1
+ TMA-AZ-CS-CBT-0001

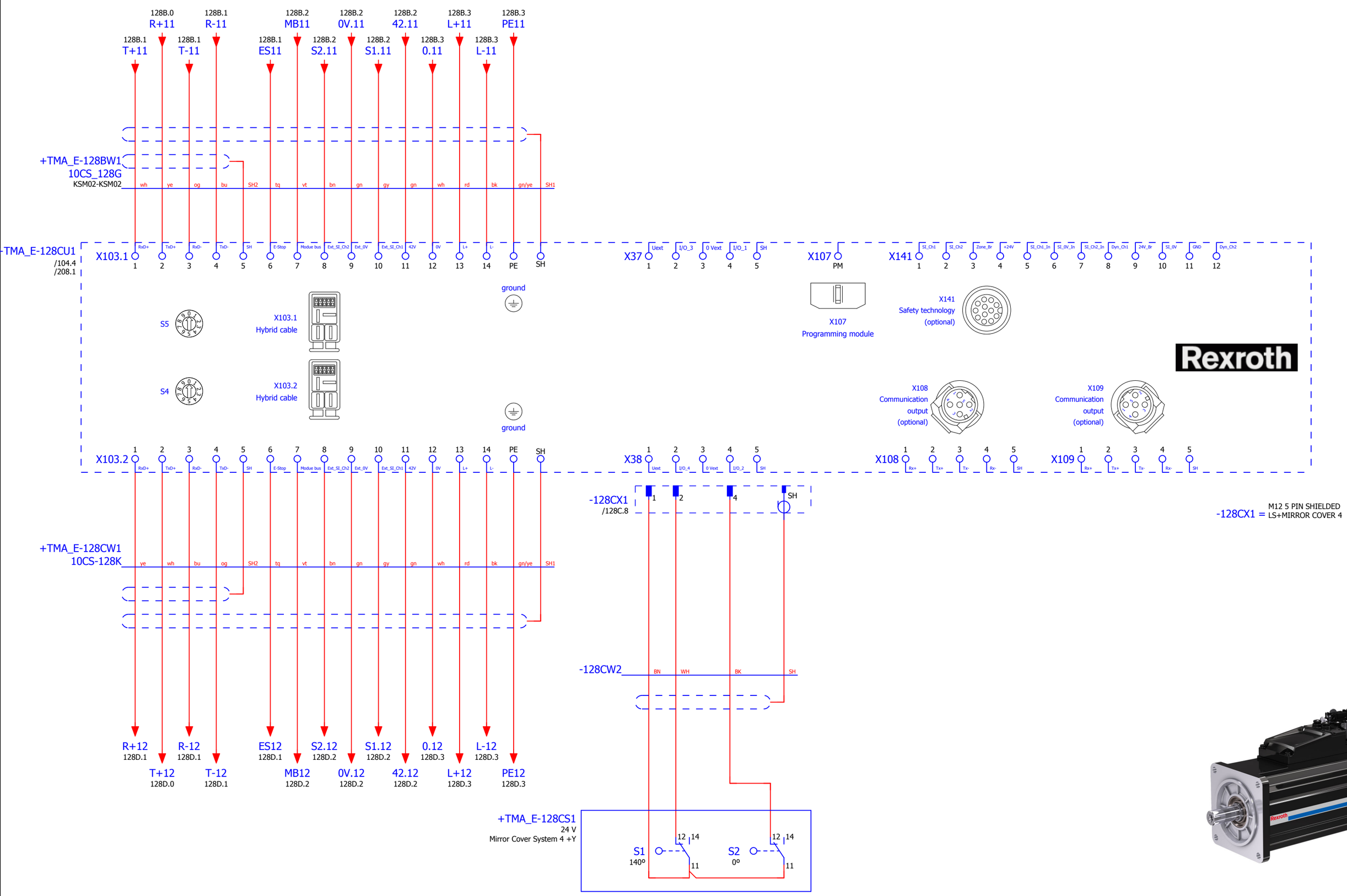

◁ 128B

128D ▷

IK4 TEKNIKER Research Alliance	IK4-TEKNIKER AVDA. OTAOLA 20 20600 Eibar (Gipuzkoa) Spain Tfno.:(+34) 943 206744 Fax: (+34) 943 202757 Web: www.tekniker.es									3151_LSST	MCS Design Electrical Schematics LSST TELESCOPE	Mirror Cover System 4 +Y	Customer: EMPRESARIOS AGRUPADOS C/Magallanes, 3 28015 MADRID 91 3098000 http://www.empresariosagrupados.es/	= E1 + TMA-AZ-CS-CBT-0001
		Date	15/12/2017											Page 128C Total number 710
		Reviewed	F.LÓPEZ	2.3	15/12/2017	JOSE MANUEL								
		Drew by	JOSE MANUEL	Review	Date	Name	Review	Date	Name	Replaces	Replaced by			

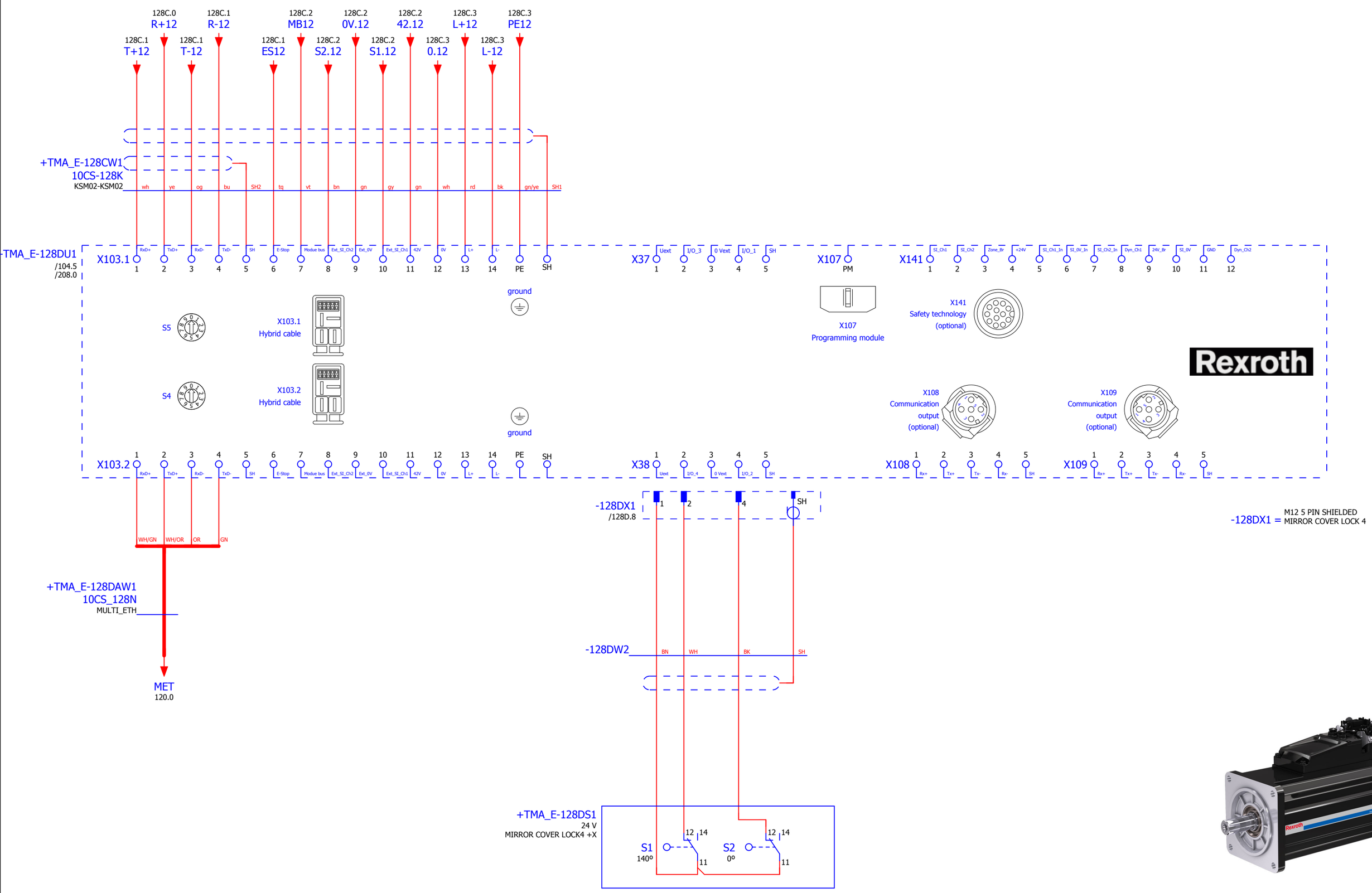

IK4-TEKNIKER
AVDA. OTAOLA 20
20600 Eibar (Gipuzkoa) Spain
Tfno.:(+34) 943 206744
Fax: (+34) 943 202757
Web: www.tekniker.es

Date	15/12/2017						
Reviewed	F.LÓPEZ	2.3	15/12/2017	JOSE MANUEL			
Drew by	JOSE MANUEL	Review	Date	Name	Review	Date	Name

3151_LSST
MCS Design Electrical Schematics
LSST TELESCOPE

Replaces | Replaced by

MIRROR COVER LOCK 4
+X

Customer: EMPRESARIOS AGRUPADOS
C/Magallanes, 3
28015 MADRID
91 3098000
http://www.empresariosagrupados.es/

= E1
+ TMA-AZ-CS-CBT-0001

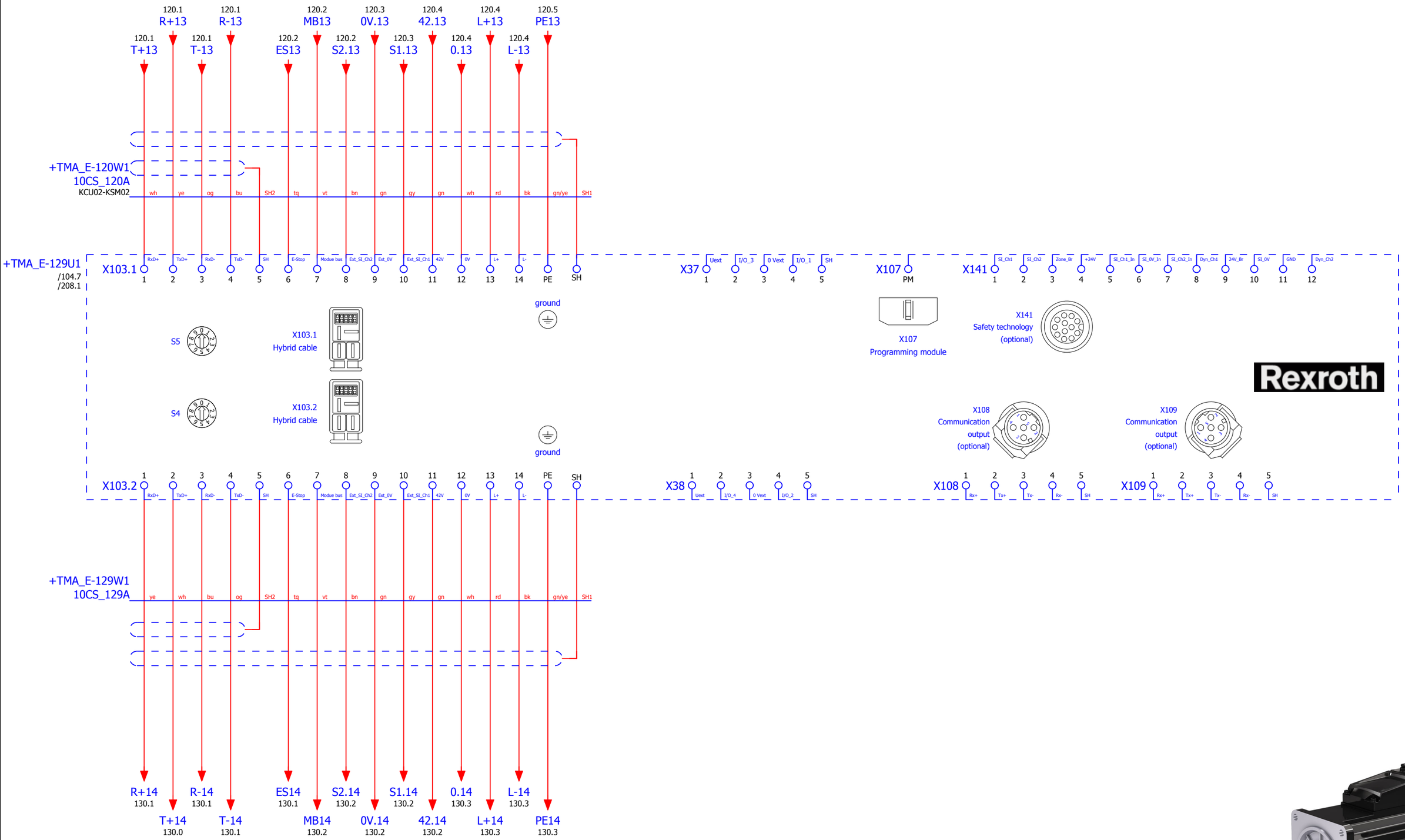

◁ 128D

130 ▷

IK4-TEKNIKER
AVDA. OTAOLA 20
20600 Eibar (Gipuzkoa) Spain
Tfno.:(+34) 943 206744
Fax: (+34) 943 202757
Web: www.tekniker.es

Date	15/12/2017							
Reviewed	F.LÓPEZ	2.3	15/12/2017	JOSE MANUEL				
Drew by	JOSE MANUEL	Review	Date	Name	Review	Date	Name	

3151_LSST
MCS Design Electrical Schematics
LSST TELESCOPE
Replaces
Replaced by

Deployable Platform 1
+X

Customer:
EMPRESARIOS AGRUPADOS
C/Magallanes, 3
28015 MADRID
91 3098000
http://www.empresariosagrupados.es/

= E1
+ TMA-AZ-CS-CBT-0001

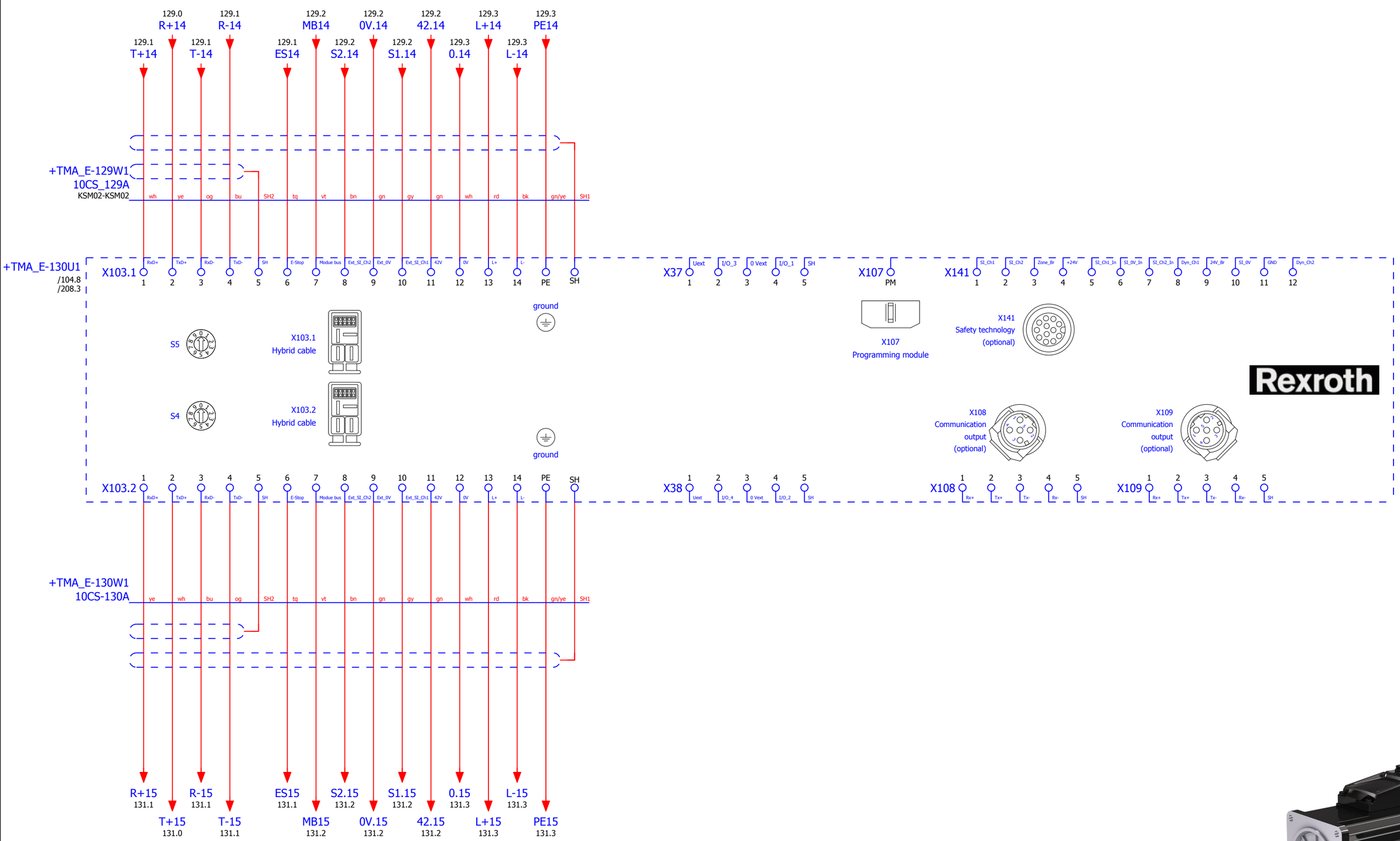

◁ 129

131 ▷

IK4-TEKNIKER
AVDA. OTAOLA 20
20600 Eibar (Gipuzkoa) Spain
Tfno.:(+34) 943 206744
Fax: (+34) 943 202757
Web: www.tekniker.es

Date	15/12/2017							
Reviewed	F.LÓPEZ	2.3	15/12/2017	JOSE MANUEL				
Drew by	JOSE MANUEL	Review	Date	Name	Review	Date	Name	

3151_LSST
MCS Design Electrical Schematics
LSST TELESCOPE

Replaces | Replaced by

Deployable Platform 2
+X

Customer: EMPRESARIOS AGRUPADOS
C/Magallanes, 3
28015 MADRID
91 3098000
http://www.empresariosagrupados.es/

= E1
+ TMA-AZ-CS-CBT-0001

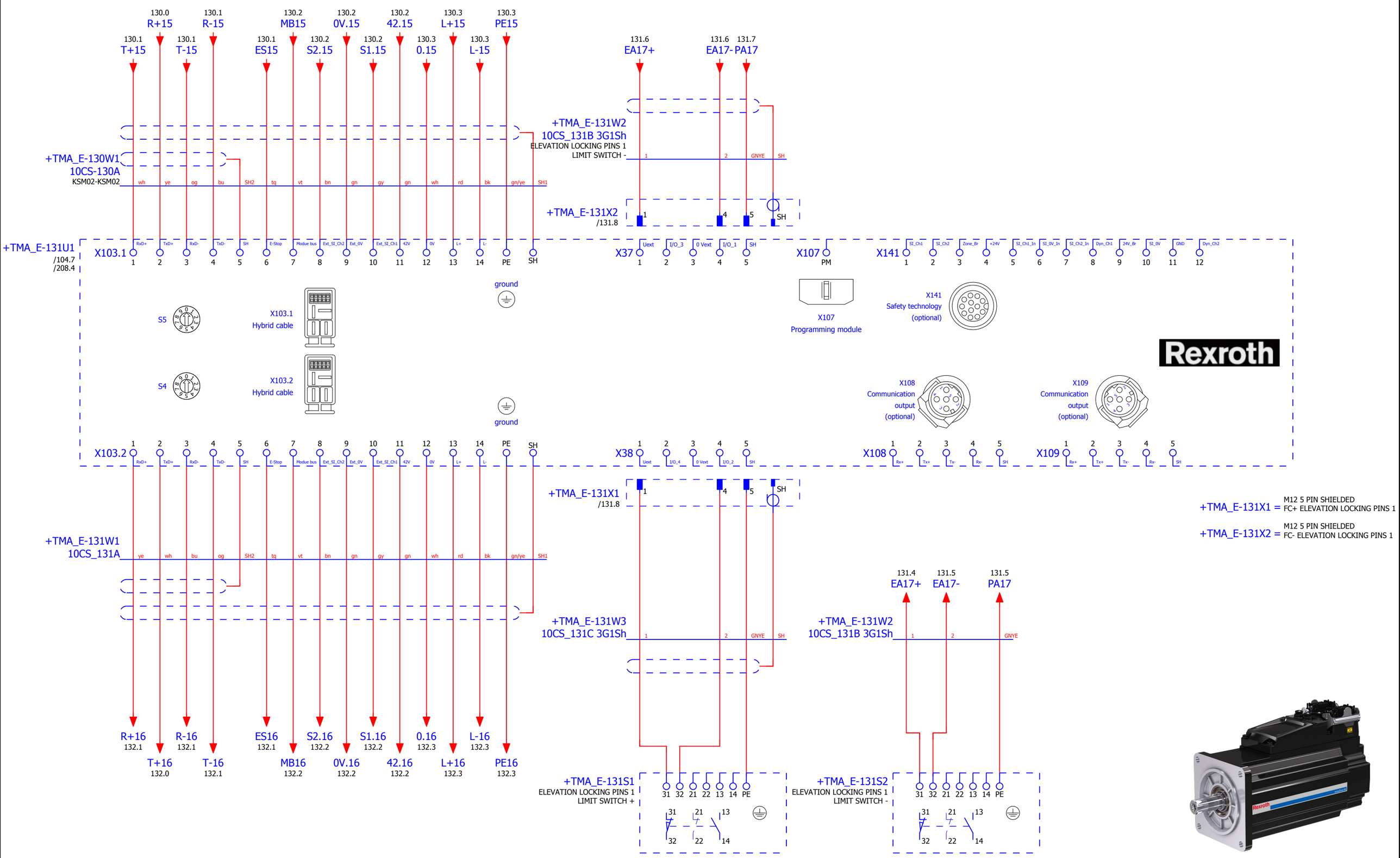

◁ 130

132 ▷

IK4-TEKNIKER
AVDA. OTAOLA 20
20600 Eibar (Gipuzkoa) Spain
Tfno.:(+34) 943 206744
Fax: (+34) 943 202757
Web: www.tekniker.es

Date	15/12/2017						
Reviewed	F.LÓPEZ	2.3	15/12/2017	JOSE MANUEL			
Drew by	JOSE MANUEL	Review	Date	Name	Review	Date	Name

3151_LSST
MCS Design Electrical Schematics
LSST TELESCOPE

Replaces | Replaced by

ELEVATION LOCKING PINS 1
+X

Customer: EMPRESARIOS AGRUPADOS
C/Magallanes, 3
28015 MADRID
91 3098000
http://www.empresariosagrupados.es/

= E1
+ TMA-AZ-CS-CBT-0001

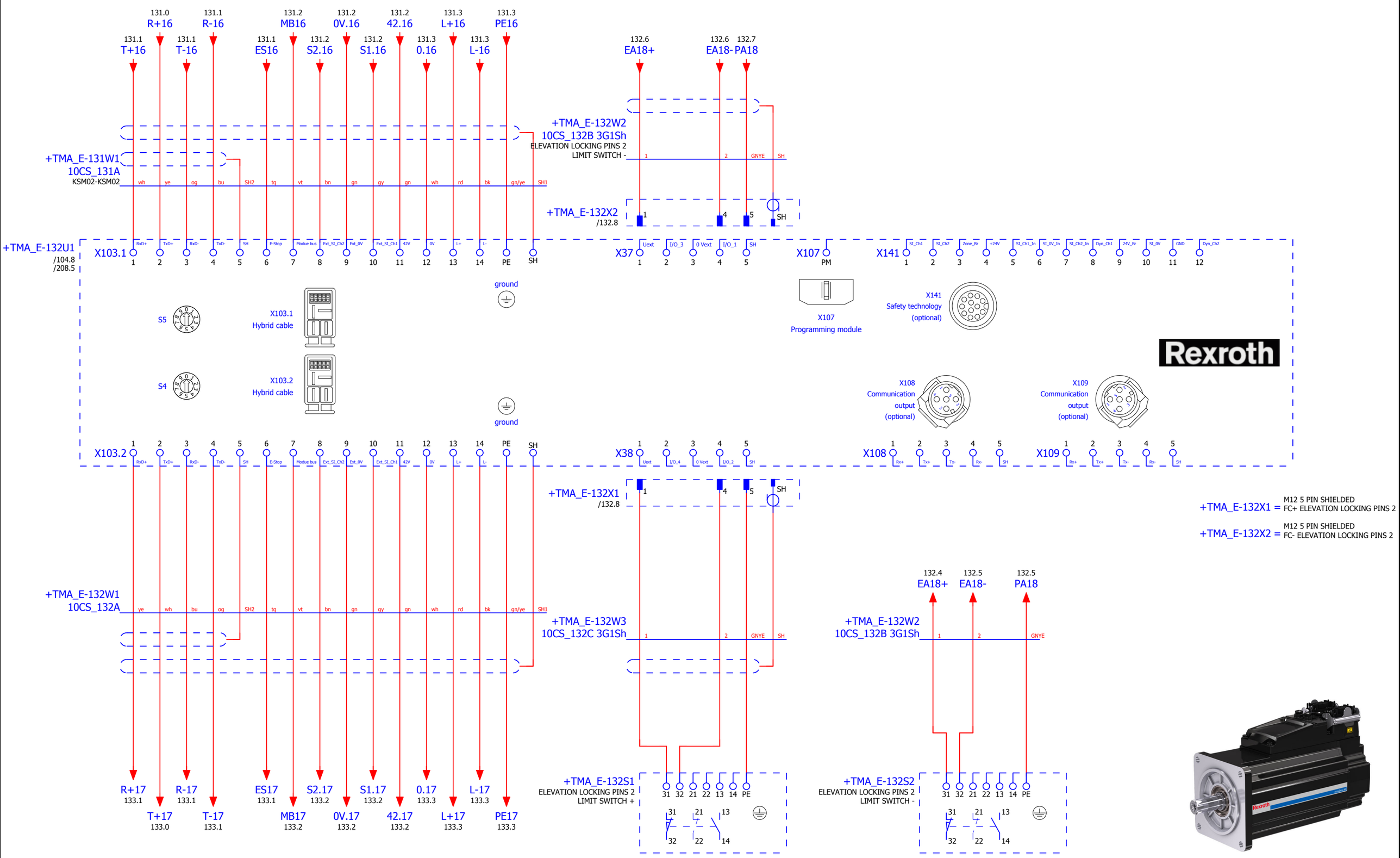

◁ 131

133 ▷

IK4-TEKNIKER
AVDA. OTAOLA 20
20600 Eibar (Gipuzkoa) Spain
Tfno.:(+34) 943 206744
Fax: (+34) 943 202757
Web: www.tekniker.es

Date	15/12/2017						
Reviewed	F.LÓPEZ	2.3	15/12/2017	JOSE MANUEL			
Drew by	JOSE MANUEL	Review	Date	Name	Review	Date	Name

3151_LSST
MCS Design Electrical Schematics
LSST TELESCOPE

Replaces | Replaced by

ELEVATION LOCKING PINS 2
-X

Customer: EMPRESARIOS AGRUPADOS
C/Magallanes, 3
28015 MADRID
91 3098000
http://www.empresariosagrupados.es/

= E1
+ TMA-AZ-CS-CBT-0001

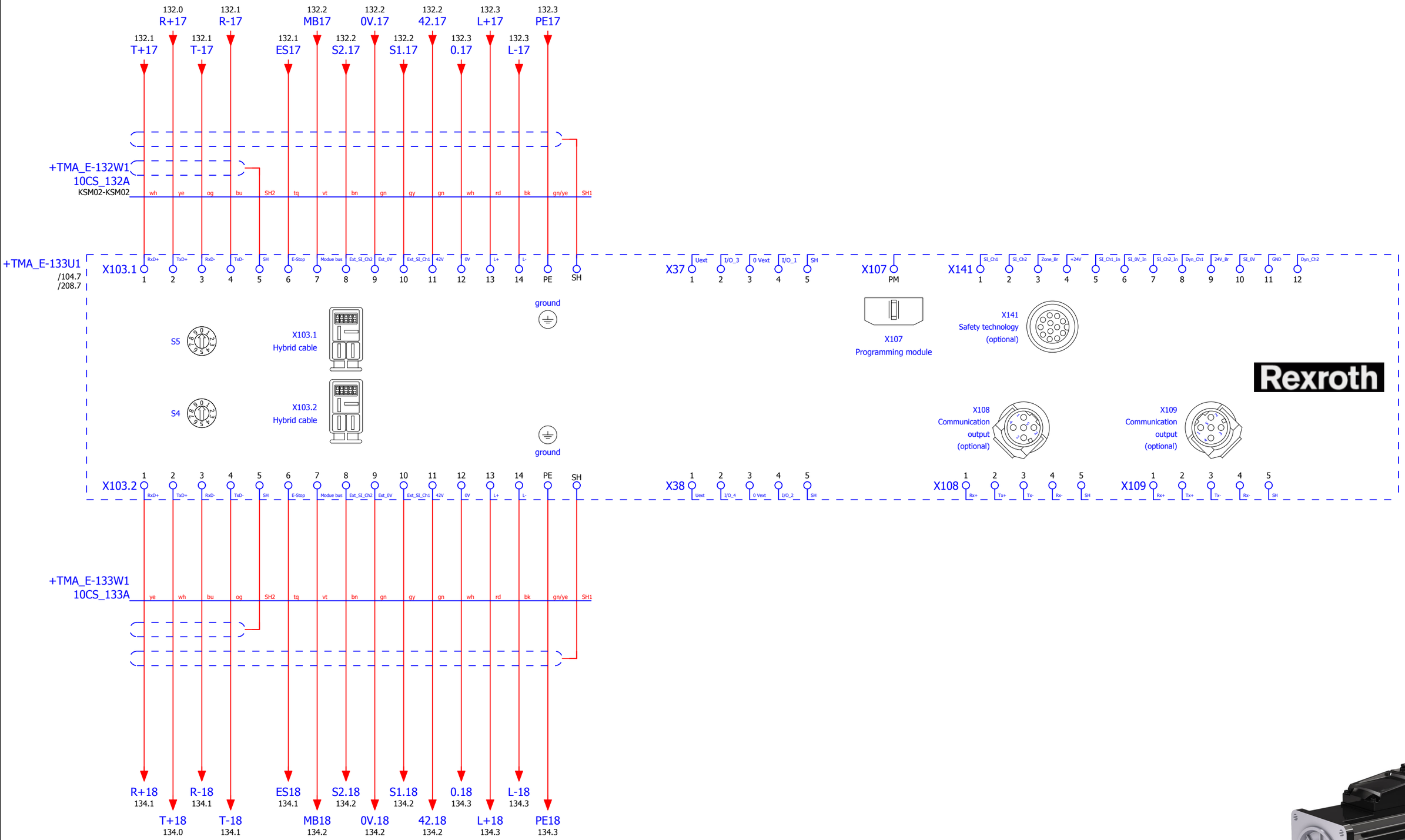

◁ 132

134 ▷

IK4-TEKNIKER
AVDA. OTAOLA 20
20600 Eibar (Gipuzkoa) Spain
Tfno.:(+34) 943 206744
Fax: (+34) 943 202757
Web: www.tekniker.es

Date	15/12/2017							
Reviewed	F.LÓPEZ	2.3	15/12/2017	JOSE MANUEL				
Drew by	JOSE MANUEL	Review	Date	Name	Review	Date	Name	

3151_LSST
MCS Design Electrical Schematics
LSST TELESCOPE

Replaces | Replaced by

Deployable Platform 3
-X

Customer: EMPRESARIOS AGRUPADOS
C/Magallanes, 3
28015 MADRID
91 3098000
http://www.empresariosagrupados.es/

= E1
+ TMA-AZ-CS-CBT-0001

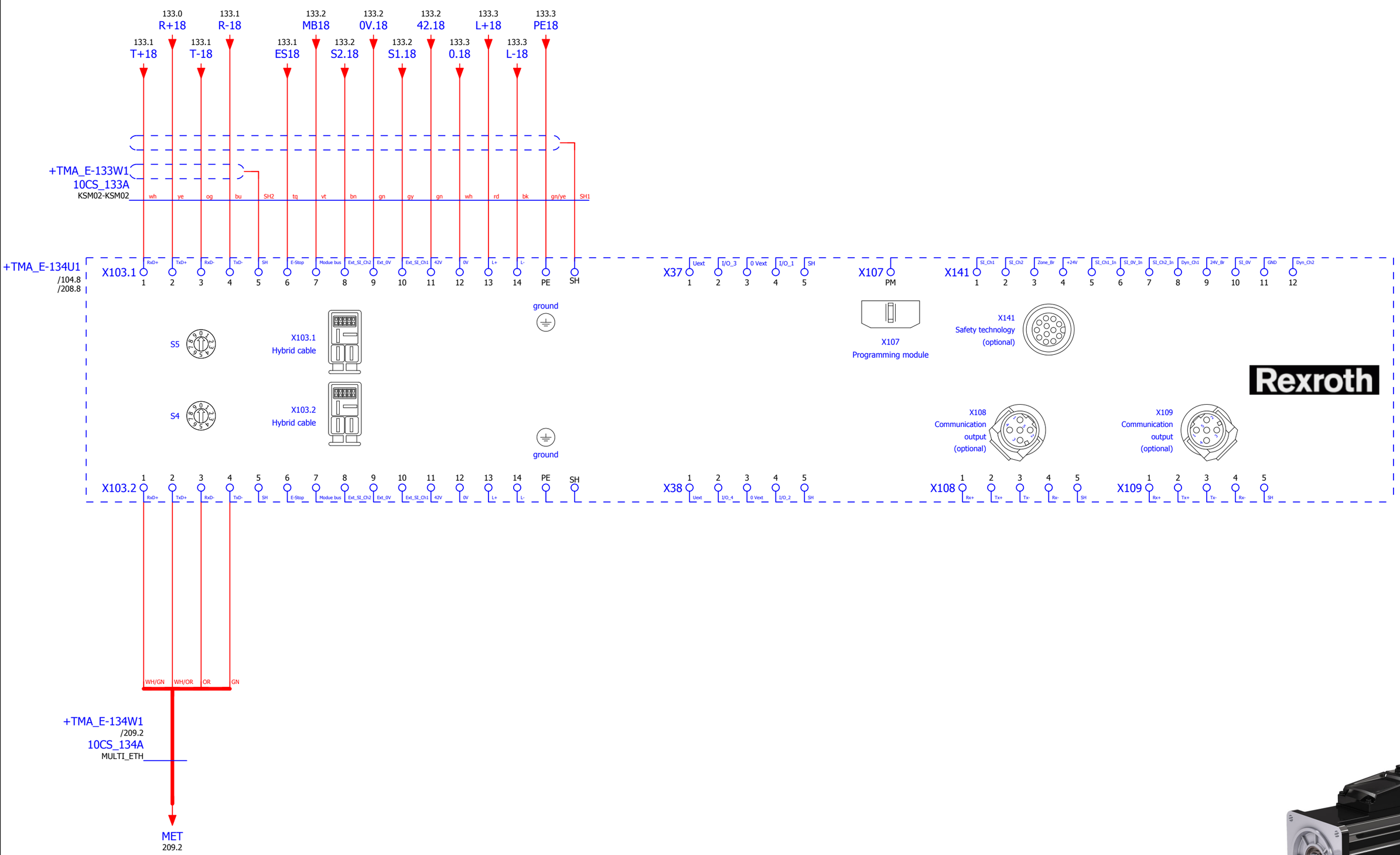

IK4-TEKNIKER
AVDA. OTAOLA 20
20600 Eibar (Gipuzkoa) Spain
Tfno.:(+34) 943 206744
Fax: (+34) 943 202757
Web: www.tekniker.es

Date	15/12/2017						
Reviewed	F.LÓPEZ	2.3	15/12/2017	JOSE MANUEL			
Drew by	JOSE MANUEL	Review	Date	Name	Review	Date	Name

3151_LSST

MCS Design Electrical Schematics

LSST TELESCOPE

Replaces | Replaced by

Deployable Platform 4
-X

Customer: EMPRESARIOS AGRUPADOS
C/Magallanes, 3
28015 MADRID
91 3098000
http://www.empresariosagrupados.es/

= E1
+ TMA-AZ-CS-CBT-0001

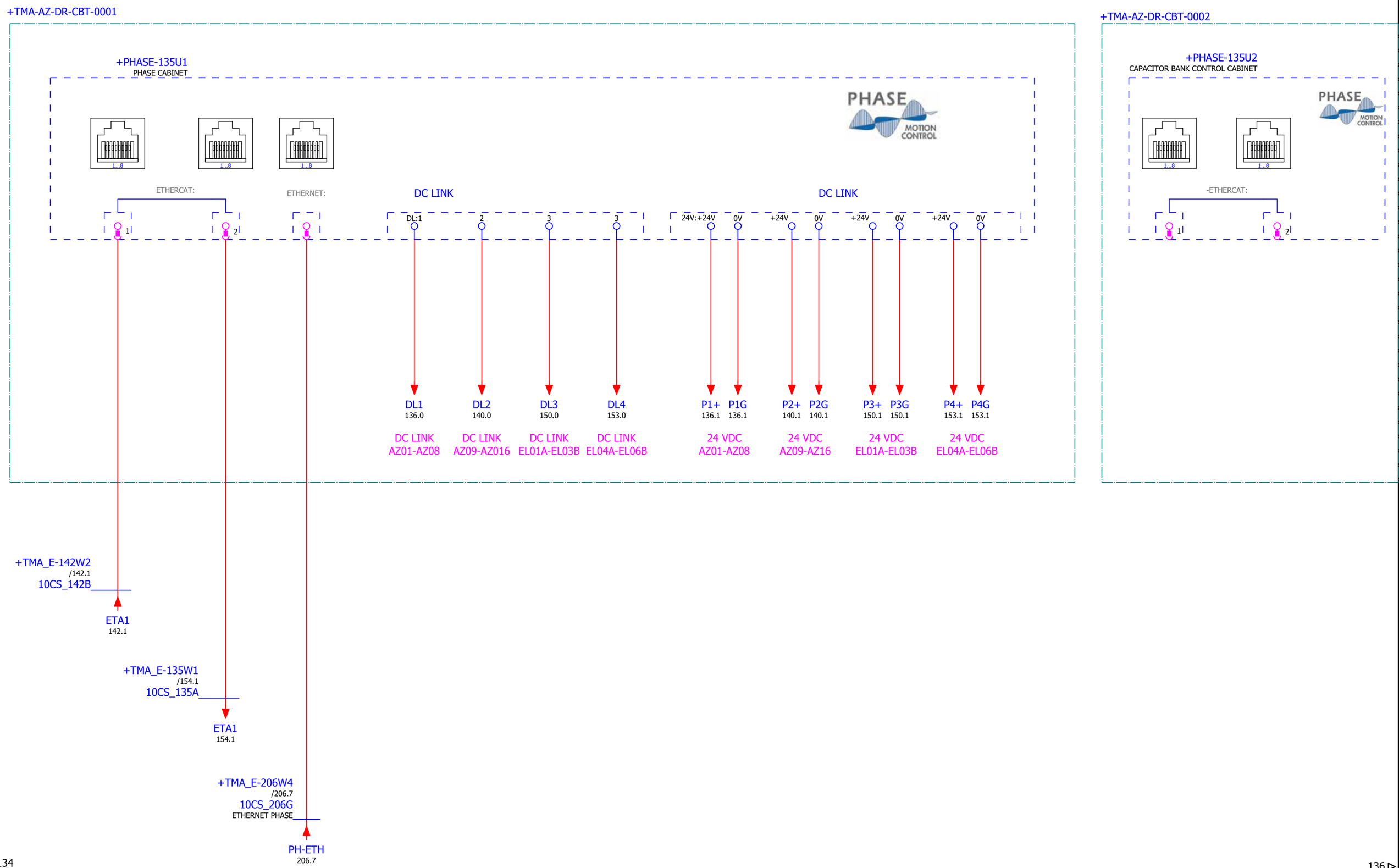

IK4-TEKNIKER
AVDA. OTAOLA 20
20600 Eibar (Gipuzkoa) Spain
Tfno.:(+34) 943 206744
Fax: (+34) 943 202757
Web: www.tekniker.es

Date	15/12/2017						
Reviewed	F.LÓPEZ	2.3	15/12/2017	JOSE MANUEL			
Drew by	JOSE MANUEL	Review	Date	Name	Review	Date	Name

3151_LSST
MCS Design Electrical Schematics
LSST TELESCOPE

Replaces | Replaced by

AZIMUTH & ELEVATION AXIS

Customer: EMPRESARIOS AGRUPADOS
C/Magallanes, 3
28015 MADRID
91 3098000
http://www.empresariosagrupados.es/

= E1
+ TMA-AZ-CS-CBT-0001

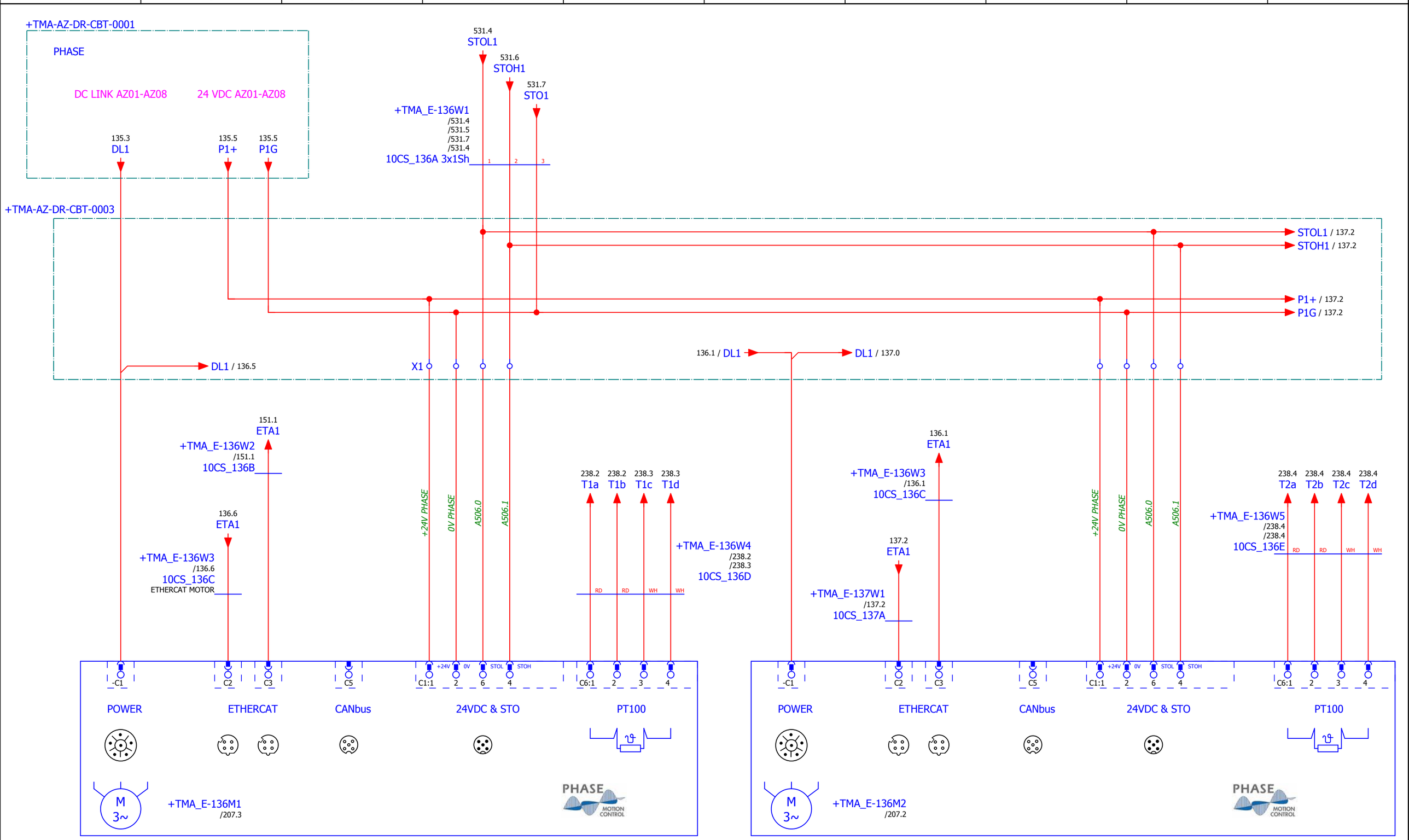

AZIMUTH SECTION AZ01

AZIMUTH SECTION AZ02

IK4 TEKNIKER Research Alliance

IK4-TEKNIKER
AVDA. OTAOLA 20
20600 Eibar (Gipuzkoa) Spain
Tfno.:(+34) 943 206744
Fax: (+34) 943 202757
Web: www.tekniker.es

Date	15/12/2017						
Reviewed	F.LÓPEZ	2.3	15/12/2017	JOSE MANUEL			
Drew by	JOSE MANUEL	Review	Date	Name	Review	Date	Name

3151_LSST

MCS Design Electrical Schematics

LSST TELESCOPE

Replaces | Replaced by

AZIMUTH AZ01-AZ02 AXIS

Customer: EMPRESARIOS AGRUPADOS
C/Magallanes, 3
28015 MADRID
91 3098000
http://www.empresariosagrupados.es/

= E1

+ TMA-AZ-CS-CBT-0001

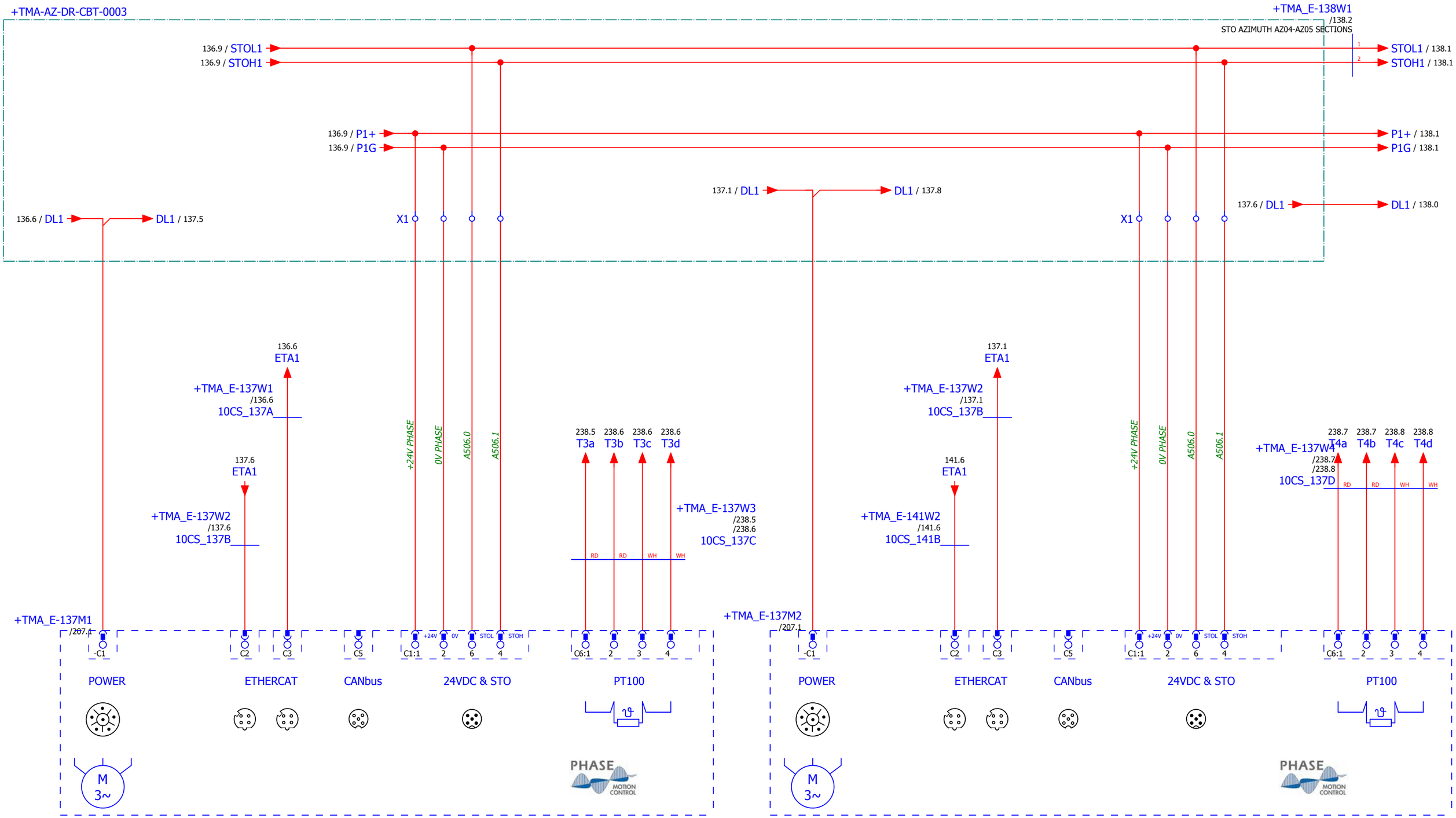

IK4 TEKNIKER Research Alliance

IK4-TEKNIKER
AVDA. OTAOLA 20
20600 Eibar (Gipuzkoa) Spain
Tfno.:(+34) 943 206744
Fax: (+34) 943 202757
Web: www.tekniker.es

Date	15/12/2017						
Reviewed	F.LÓPEZ	2.3	15/12/2017	JOSE MANUEL			
Drew by	JOSE MANUEL	Review	Date	Name	Review	Date	Name

3151_LSST

MCS Design Electrical Schematics

LSST TELESCOPE

Replaces | Replaced by

AZIMUTH AZ03-AZ04 AXIS

Customer: EMPRESARIOS AGRUPADOS
C/Magallanes, 3
28015 MADRID
91 3098000
http://www.empresariosagrupados.es/

= E1

+ TMA-AZ-CS-CBT-0001

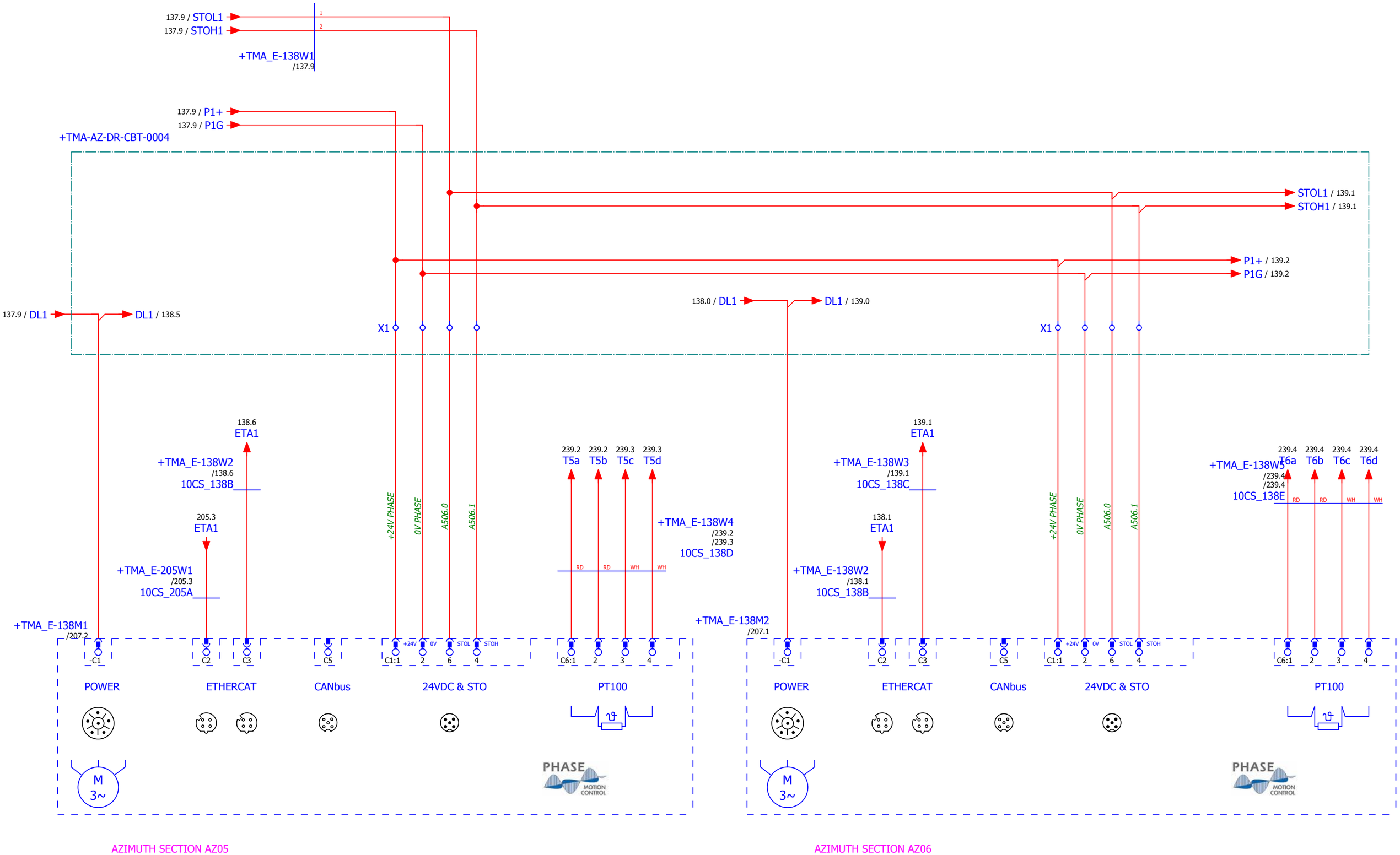

IK4 TEKNIKER Research Alliance
IK4-TEKNIKER
AVDA. OTAOLA 20
20600 Eibar (Gipuzkoa) Spain
Tfno.:(+34) 943 206744
Fax: (+34) 943 202757
Web: www.tekniker.es

Date	15/12/2017						
Reviewed	F.LÓPEZ	2.3	15/12/2017	JOSE MANUEL			
Drew by	JOSE MANUEL	Review	Date	Name	Review	Date	Name

3151_LSST
MCS Design Electrical Schematics
LSST TELESCOPE
Replaces
Replaced by

AZIMUTH AZ05-AZ06 AXIS

Customer: EMPRESARIOS AGRUPADOS
C/Magallanes, 3
28015 MADRID
91 3098000
http://www.empresariosagrupados.es/

= E1
+ TMA-AZ-CS-CBT-0001

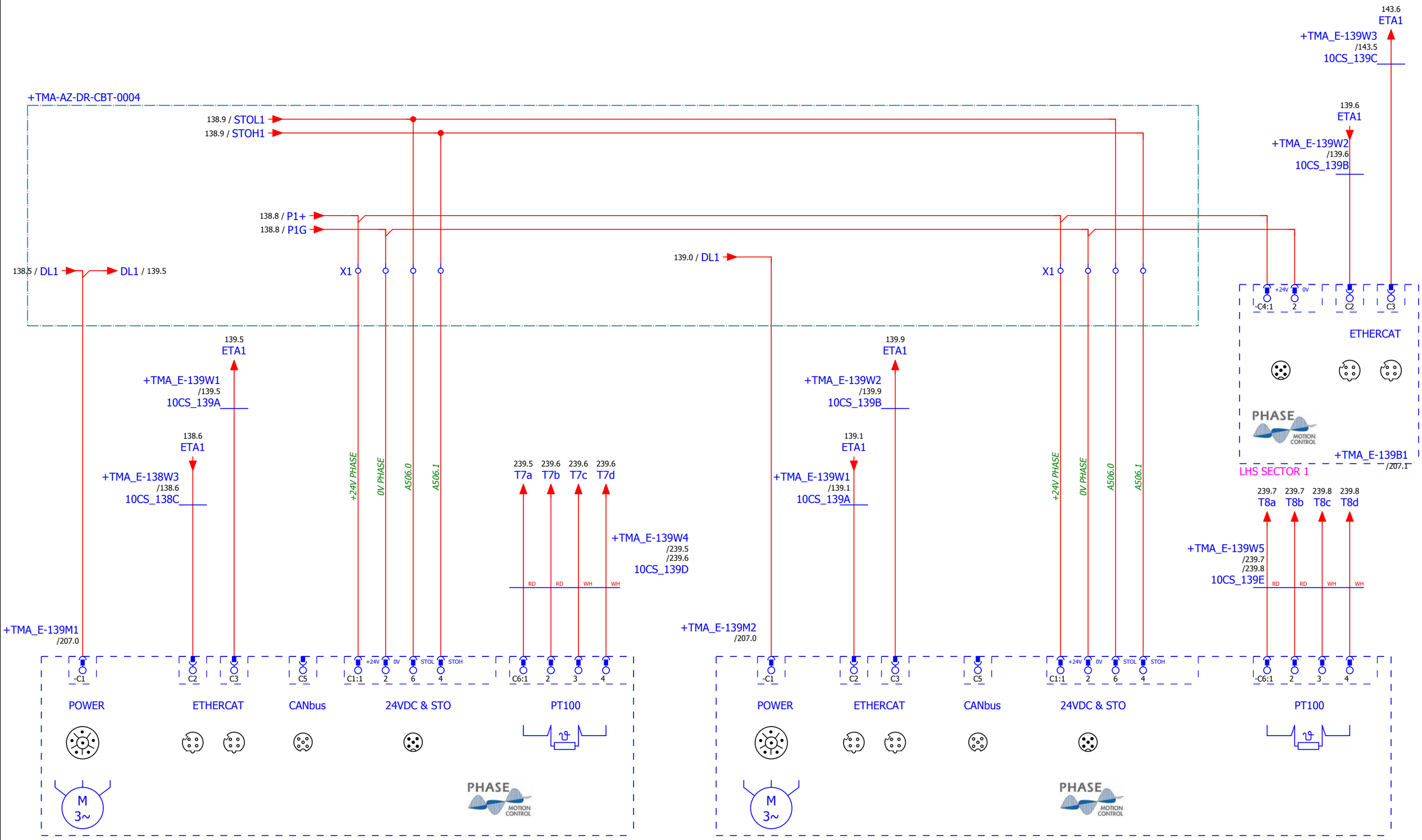

IK4 TEKNIKER Research Alliance

IK4-TEKNIKER
AVDA. OTAOLA 20
20600 Eibar (Gipuzkoa) Spain
Tfno.:(+34) 943 206744
Fax: (+34) 943 202757
Web: www.tekniker.es

Date	15/12/2017						
Reviewed	F.LÓPEZ	2.3	15/12/2017	JOSE MANUEL			
Drew by	JOSE MANUEL	Review	Date	Name	Review	Date	Name

3151_LSST

MCS Design Electrical Schematics

LSST TELESCOPE

Replaces | Replaced by

AZIMUTH AZ07-AZ08 AXIS

Customer: EMPRESARIOS AGRUPADOS
C/Magallanes, 3
28015 MADRID
91 3098000
http://www.empresariosagrupados.es/

= E1

+ TMA-AZ-CS-CBT-0001

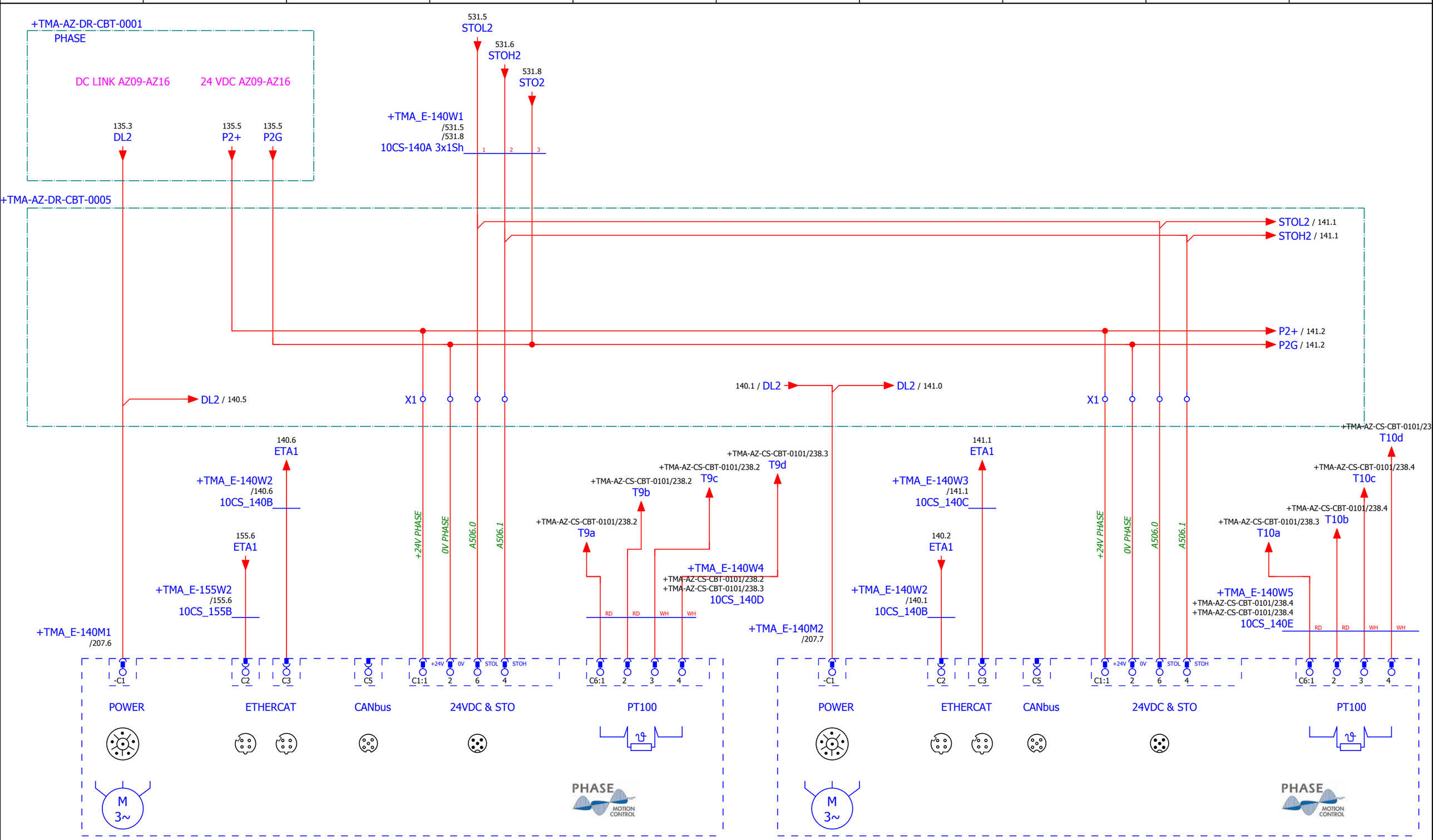
+TMA-AZ-DR-CBT-0001
PHASE
DC LINK AZ09-AZ16
24 VDC AZ09-AZ16
135.3
DL2
135.5
P2+
135.5
P2G
531.5
STOL2
531.6
STOH2
531.8
STO2
+TMA_E-140W1
/531.5
/531.8
10CS-140A 3x1Sh
+TMA-AZ-DR-CBT-0005
STOL2 / 141.1
STOH2 / 141.1
P2+ / 141.2
P2G / 141.2
DL2 / 140.5
X1
140.1 / DL2
DL2 / 141.0
X1
140.6
ETA1
+TMA_E-140W2
/140.6
10CS_140B
155.6
ETA1
+TMA_E-155W2
/155.6
10CS_155B
+TMA_E-140M1
/207.6
+24V PHASE
0V PHASE
A506.0
A506.1
+TMA-AZ-CS-CBT-0101/238.2
T9a
+TMA-AZ-CS-CBT-0101/238.2
T9b
+TMA-AZ-CS-CBT-0101/238.2
T9c
+TMA-AZ-CS-CBT-0101/238.3
T9d
+TMA_E-140W4
+TMA-AZ-CS-CBT-0101/238.2
+TMA-AZ-CS-CBT-0101/238.3
10CS_140D
RD
RD
WH
WH
141.1
ETA1
+TMA_E-140W3
/141.1
10CS_140C
140.2
ETA1
+TMA_E-140W2
/140.1
10CS_140B
+TMA_E-140M2
/207.7
+TMA-AZ-CS-CBT-0101/23
T10d
+TMA-AZ-CS-CBT-0101/238.4
T10c
+TMA-AZ-CS-CBT-0101/238.4
T10b
+TMA-AZ-CS-CBT-0101/238.3
T10a
+TMA_E-140W5
+TMA-AZ-CS-CBT-0101/238.4
+TMA-AZ-CS-CBT-0101/238.4
10CS_140E
RD
RD
WH
WH
+24V PHASE
0V PHASE
A506.0
A506.1
-C1
C2
C3
C5
C1:1
2
6
4
C6:1
2
3
4
+24V
0V
STOL
STOH
POWER
ETHERCAT
CANbus
24VDC & STO
PT100
M
3~
PHASE
MOTION CONTROL
AZIMUTH SECTION AZ09
AZIMUTH SECTION AZ10

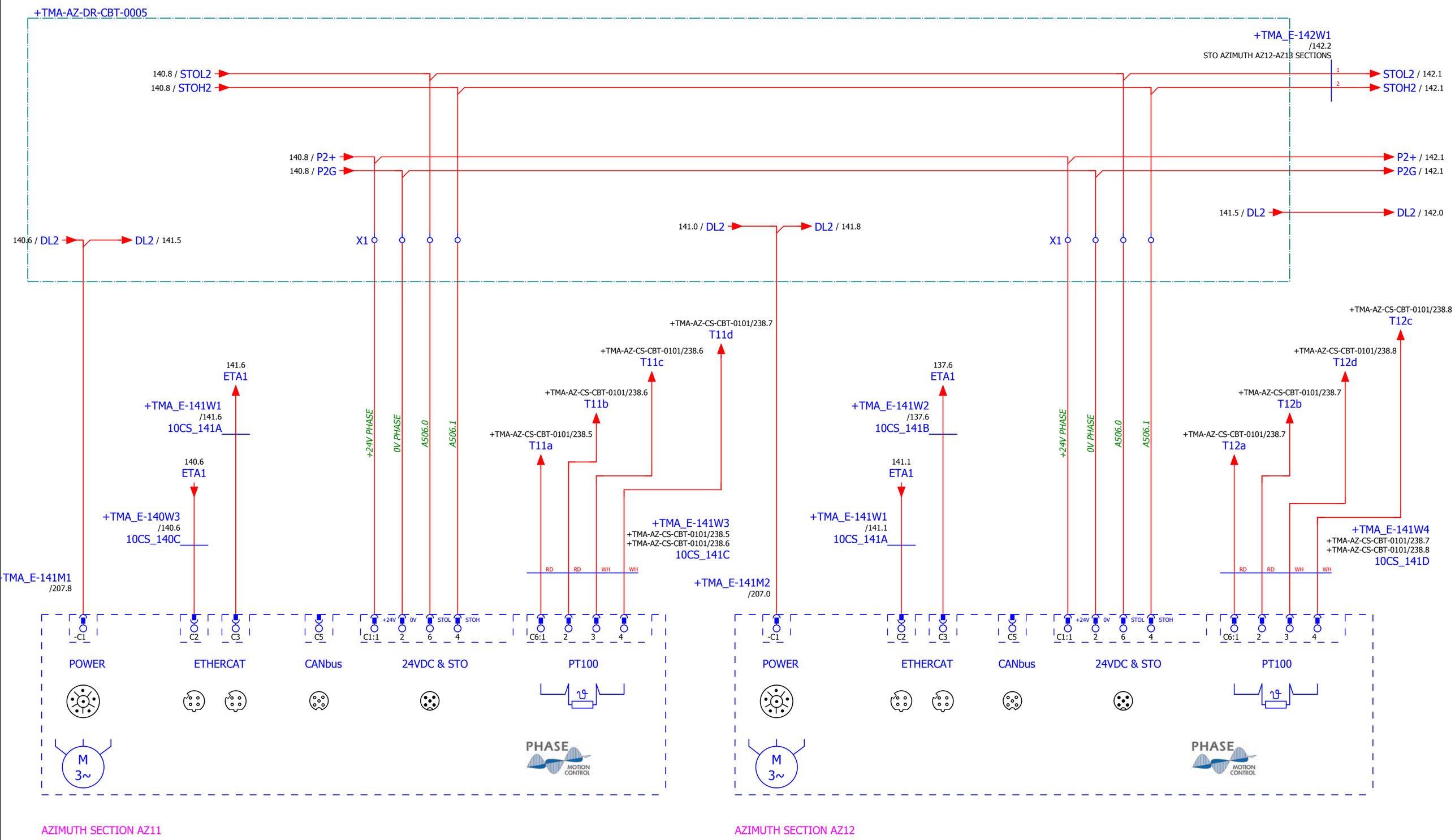

IK4 TEKNIKER Research Alliance

IK4-TEKNIKER
AVDA. OTAOLA 20
20600 Eibar (Gipuzkoa) Spain
Tfno.:(+34) 943 206744
Fax: (+34) 943 202757
Web: www.tekniker.es

Date	15/12/2017						
Reviewed	F.LÓPEZ	2.3	15/12/2017	JOSE MANUEL			
Drew by	JOSE MANUEL	Review	Date	Name	Review	Date	Name

3151_LSST

MCS Design Electrical Schematics

LSST TELESCOPE

Replaces | Replaced by

AZIMUTH AZ11-AZ12 AXIS

Customer: EMPRESARIOS AGRUPADOS
C/Magallanes, 3
28015 MADRID
91 3098000
http://www.empresariosagrupados.es/

= E1

+ TMA-AZ-CS-CBT-0001

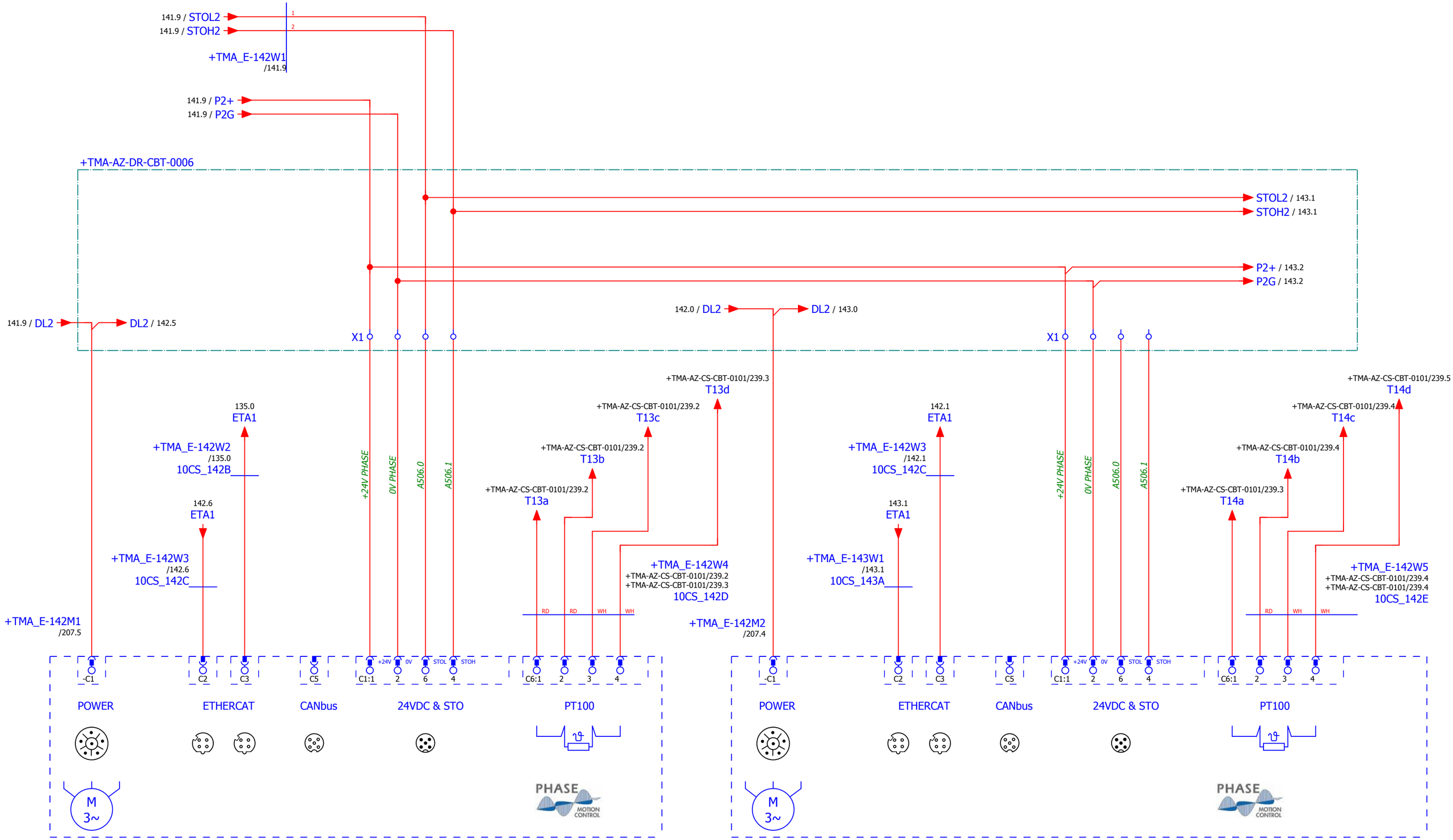

IK4 TEKNIKER Research Alliance

IK4-TEKNIKER
AVDA. OTAOLA 20
20600 Eibar (Gipuzkoa) Spain
Tfno.:(+34) 943 206744
Fax: (+34) 943 202757
Web: www.tekniker.es

Date	15/12/2017						
Reviewed	F.LÓPEZ	2.3	15/12/2017	JOSE MANUEL			
Drew by	JOSE MANUEL	Review	Date	Name	Review	Date	Name

3151_LSST

MCS Design Electrical Schematics

LSST TELESCOPE

Replaces | Replaced by

AZIMUTH AZ13-AZ14 AXIS

Customer: EMPRESARIOS AGRUPADOS
C/Magallanes, 3
28015 MADRID
91 3098000
http://www.empresariosagrupados.es/

= E1

+ TMA-AZ-CS-CBT-0001

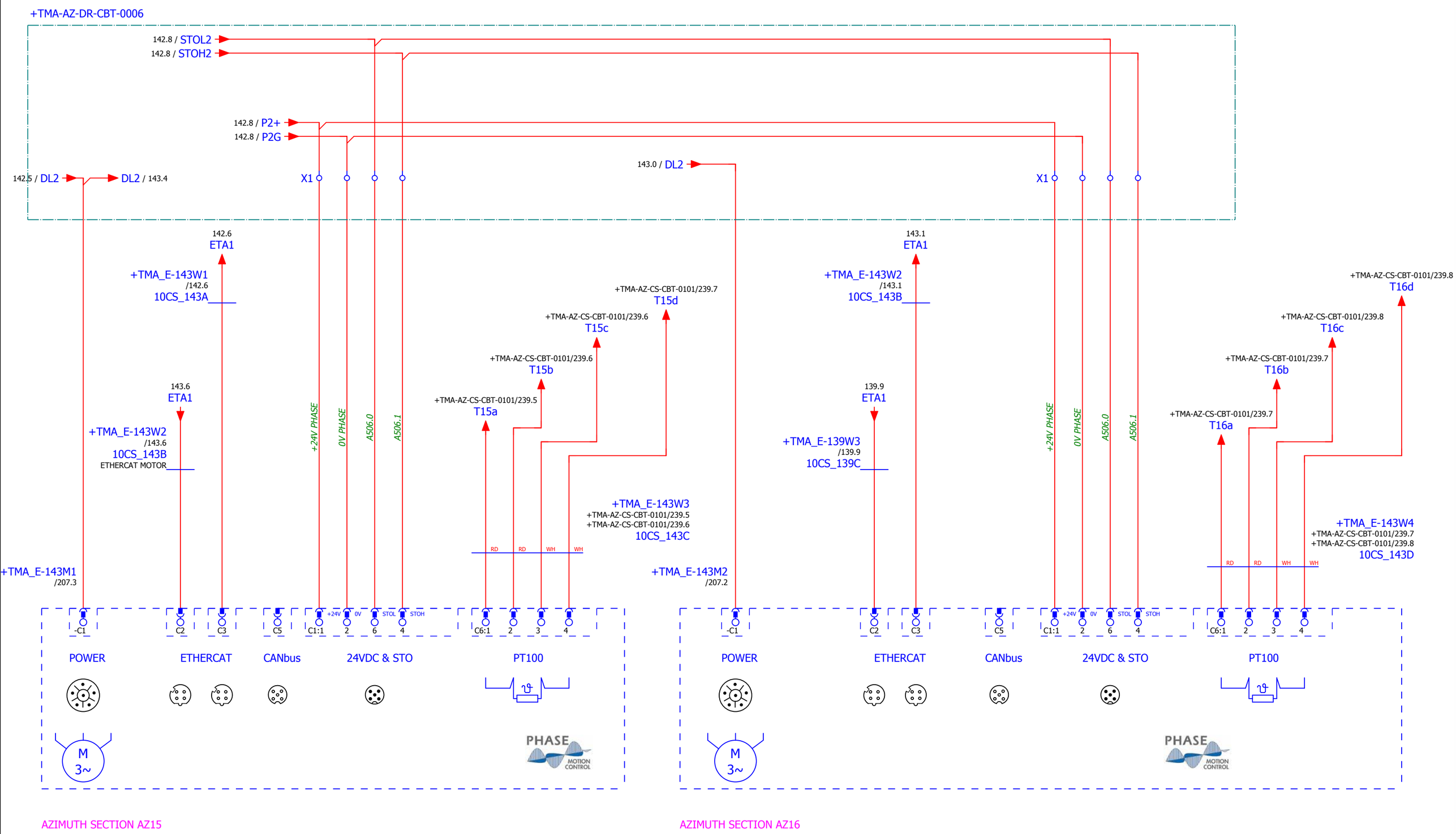

AZIMUTH SECTION AZ15

AZIMUTH SECTION AZ16

IK4 TEKNIKER Research Alliance

IK4-TEKNIKER
AVDA. OTAOLA 20
20600 Eibar (Gipuzkoa) Spain
Tfno.:(+34) 943 206744
Fax: (+34) 943 202757
Web: www.tekniker.es

Date	15/12/2017						
Reviewed	F.LÓPEZ	2.3	15/12/2017	JOSE MANUEL			
Drew by	JOSE MANUEL	Review	Date	Name	Review	Date	Name

3151_LSST

MCS Design Electrical Schematics

LSST TELESCOPE

Replaces

Replaced by

AZIMUTH AZ15-AZ16 AXIS

Customer: EMPRESARIOS AGRUPADOS
C/Magallanes, 3
28015 MADRID
91 3098000
http://www.empresariosagrupados.es/

= E1

+ TMA-AZ-CS-CBT-0001

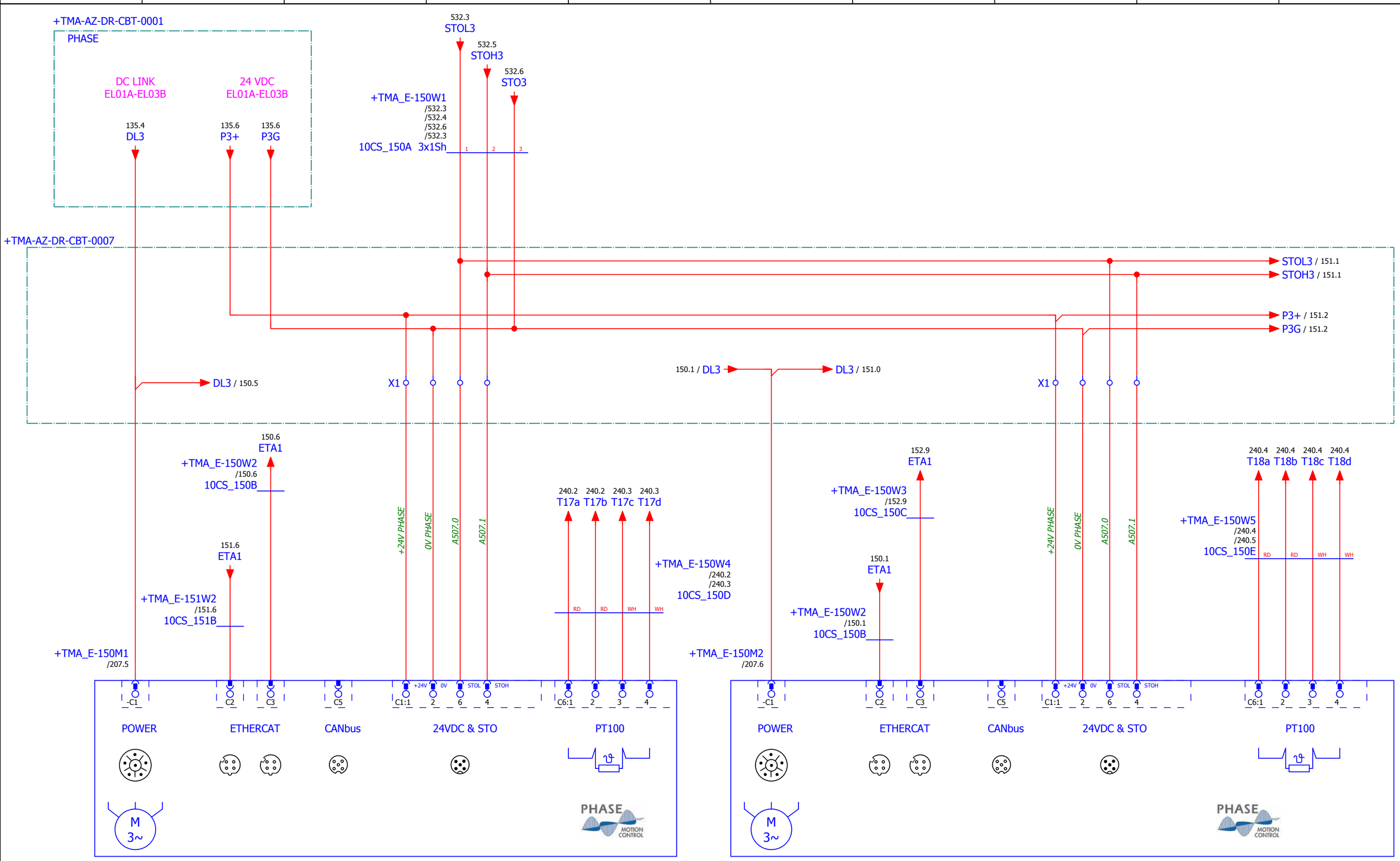

ELEVATION SECTION EL01A

ELEVATION SECTION EL01B

IK4 TEKNIKER Research Alliance

IK4-TEKNIKER
AVDA. OTAOLA 20
20600 Eibar (Gipuzkoa) Spain
Tfno.:(+34) 943 206744
Fax: (+34) 943 202757
Web: www.tekniker.es

Date	15/12/2017						
Reviewed	F.LÓPEZ	2.3	15/12/2017	JOSE MANUEL			
Drew by	JOSE MANUEL	Review	Date	Name	Review	Date	Name

3151_LSST

MCS Design Electrical Schematics

LSST TELESCOPE

Replaces | Replaced by

ELEVATION AXIS EL01A -EL01B

Customer: EMPRESARIOS AGRUPADOS
C/Magallanes, 3
28015 MADRID
91 3098000
http://www.empresariosagrupados.es/

= E1

+ TMA-AZ-CS-CBT-0001

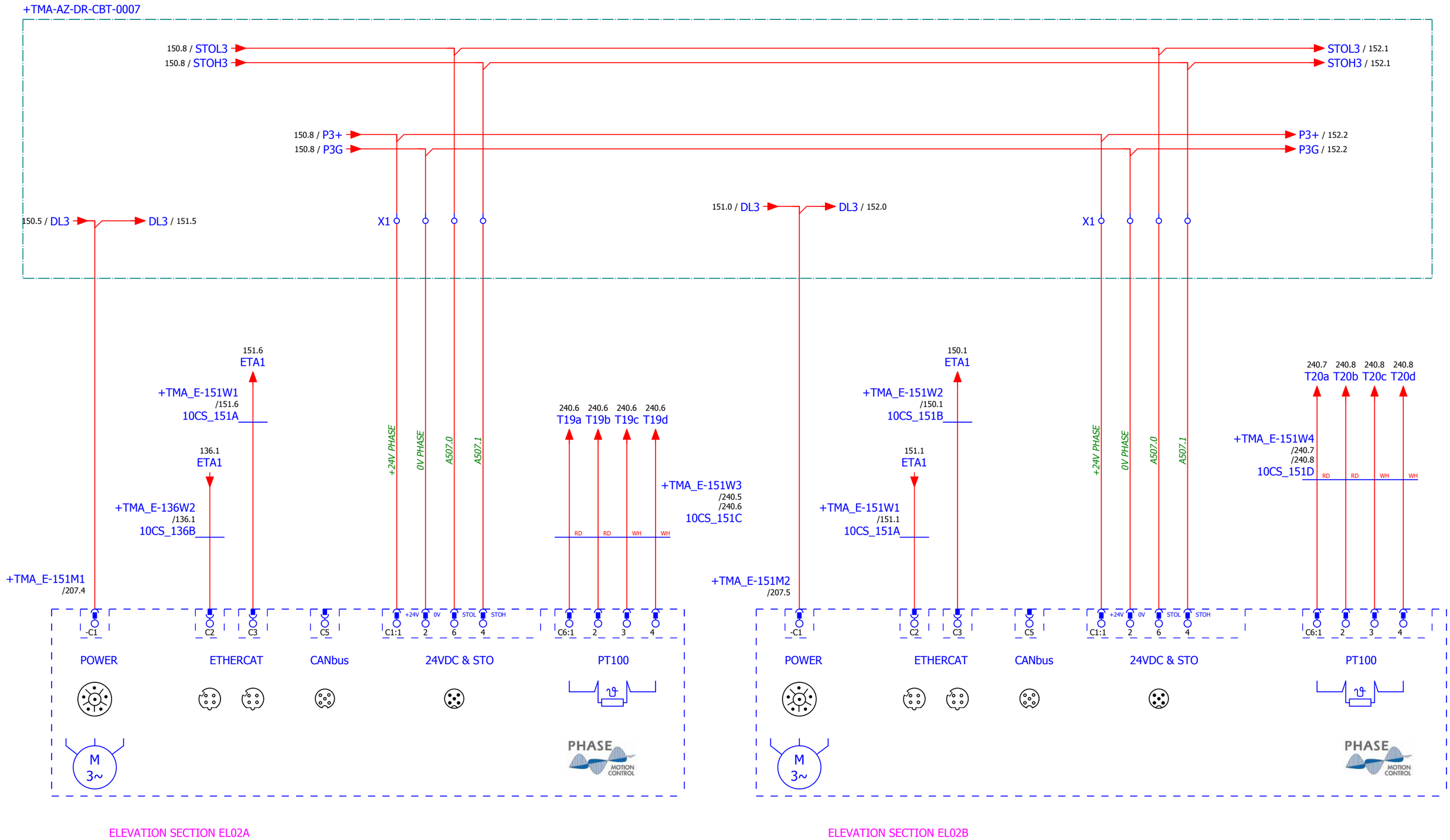

ELEVATION SECTION EL02A

ELEVATION SECTION EL02B

IK4 TEKNIKER Research Alliance
IK4-TEKNIKER
AVDA. OTAOLA 20
20600 Eibar (Gipuzkoa) Spain
Tfno.:(+34) 943 206744
Fax: (+34) 943 202757
Web: www.tekniker.es

Date	15/12/2017						
Reviewed	F.LÓPEZ	2.3	15/12/2017	JOSE MANUEL			
Drew by	JOSE MANUEL	Review	Date	Name	Review	Date	Name

3151_LSST

MCS Design Electrical Schematics

LSST TELESCOPE

Replaces | Replaced by

ELEVATION AXIS EL02A -EL02B

Customer: EMPRESARIOS AGRUPADOS
C/Magallanes, 3
28015 MADRID
91 3098000
http://www.empresariosagrupados.es/

= E1
+ TMA-AZ-CS-CBT-0001

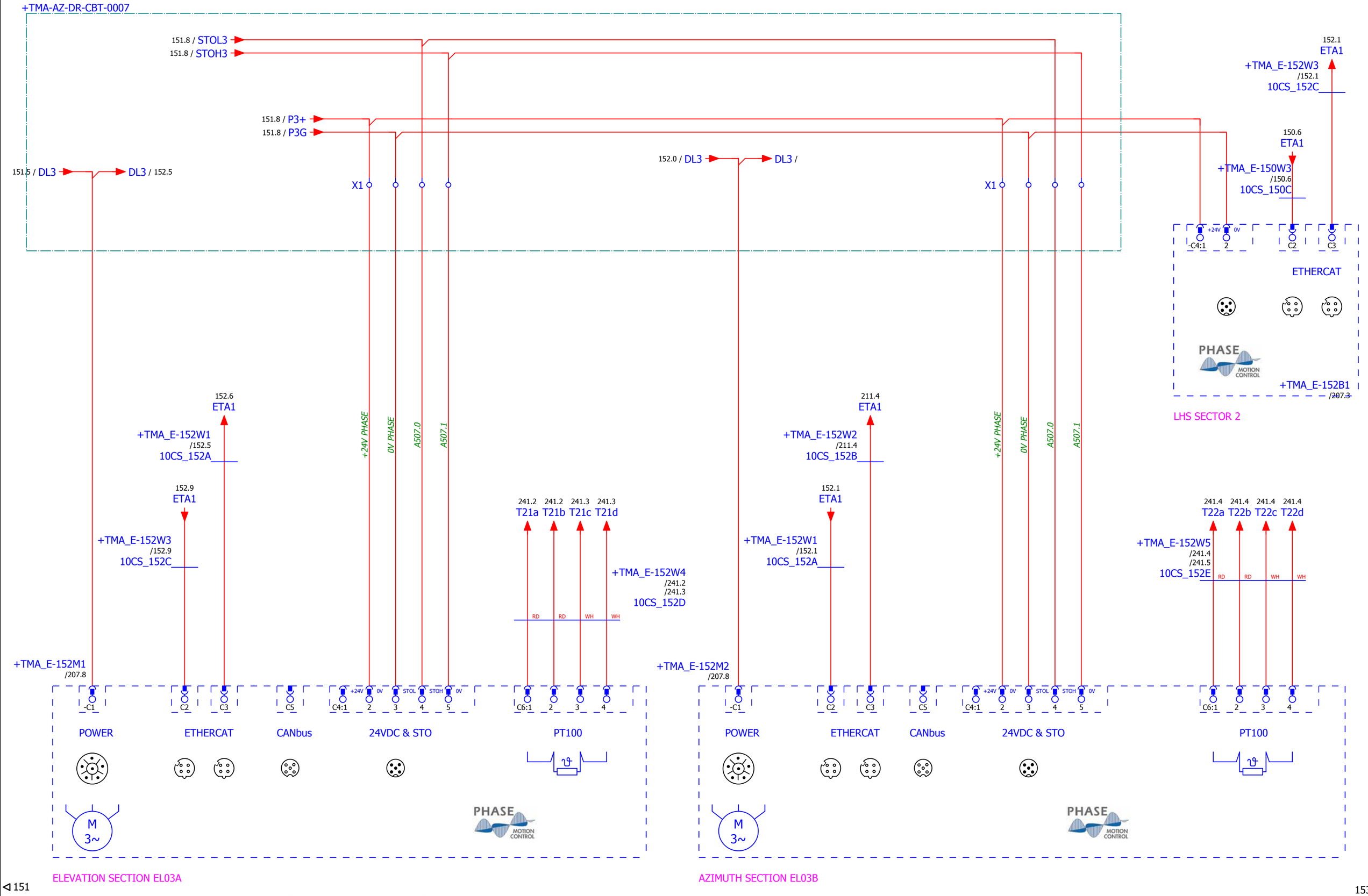

IK4 TEKNIKER Research Alliance	IK4-TEKNIKER AVDA. OTAOLA 20 20600 Eibar (Gipuzkoa) Spain Tfno.:(+34) 943 206744 Fax: (+34) 943 202757 Web: www.tekniker.es									3151_LSST	MCS Design Electrical Schematics LSST TELESCOPE	ELEVATION AXIS EL03A -EL03B	Customer: EMPRESARIOS AGRUPADOS C/Magallanes, 3 28015 MADRID 91 3098000 http://www.empresariosagrupados.es/	= E1 + TMA-AZ-CS-CBT-0001
		Date	15/12/2017											
		Reviewed	F.LÓPEZ	2.3	15/12/2017	JOSE MANUEL								Page 152
		Drew by	JOSE MANUEL	Review	Date	Name	Review	Date	Name	Replaces	Replaced by			Total number 710

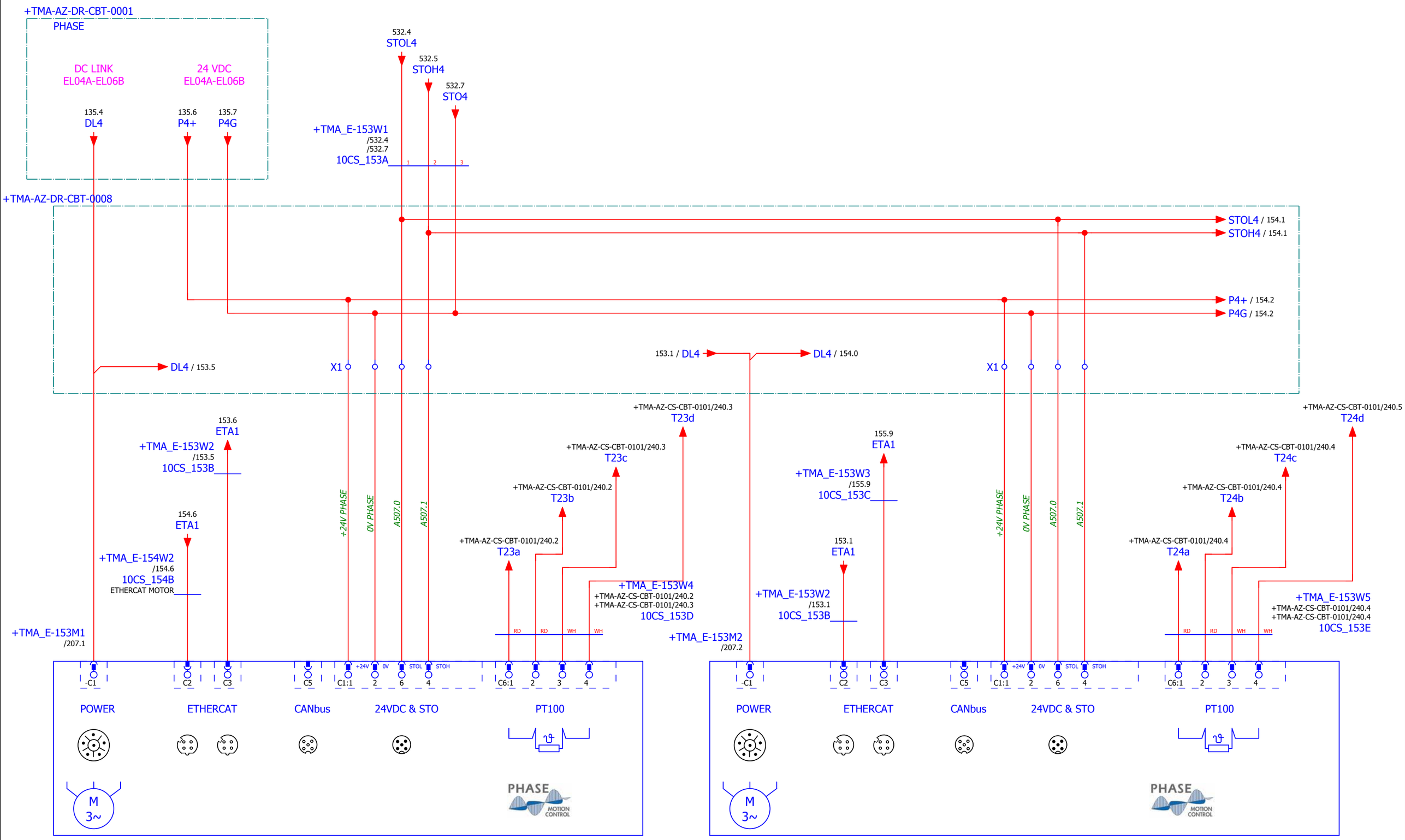

IK4 TEKNIKER Research Alliance

IK4-TEKNIKER
AVDA. OTAOLA 20
20600 Eibar (Gipuzkoa) Spain
Tfno.:(+34) 943 206744
Fax: (+34) 943 202757
Web: www.tekniker.es

Date	15/12/2017						
Reviewed	F.LÓPEZ	2.3	15/12/2017	JOSE MANUEL			
Drew by	JOSE MANUEL	Review	Date	Name	Review	Date	Name

3151_LSST

MCS Design Electrical Schematics

LSST TELESCOPE

Replaces | Replaced by

ELEVATION AXIS EL04A -EL04B

Customer: EMPRESARIOS AGRUPADOS
C/Magallanes, 3
28015 MADRID
91 3098000
http://www.empresariosagrupados.es/

= E1

+ TMA-AZ-CS-CBT-0001

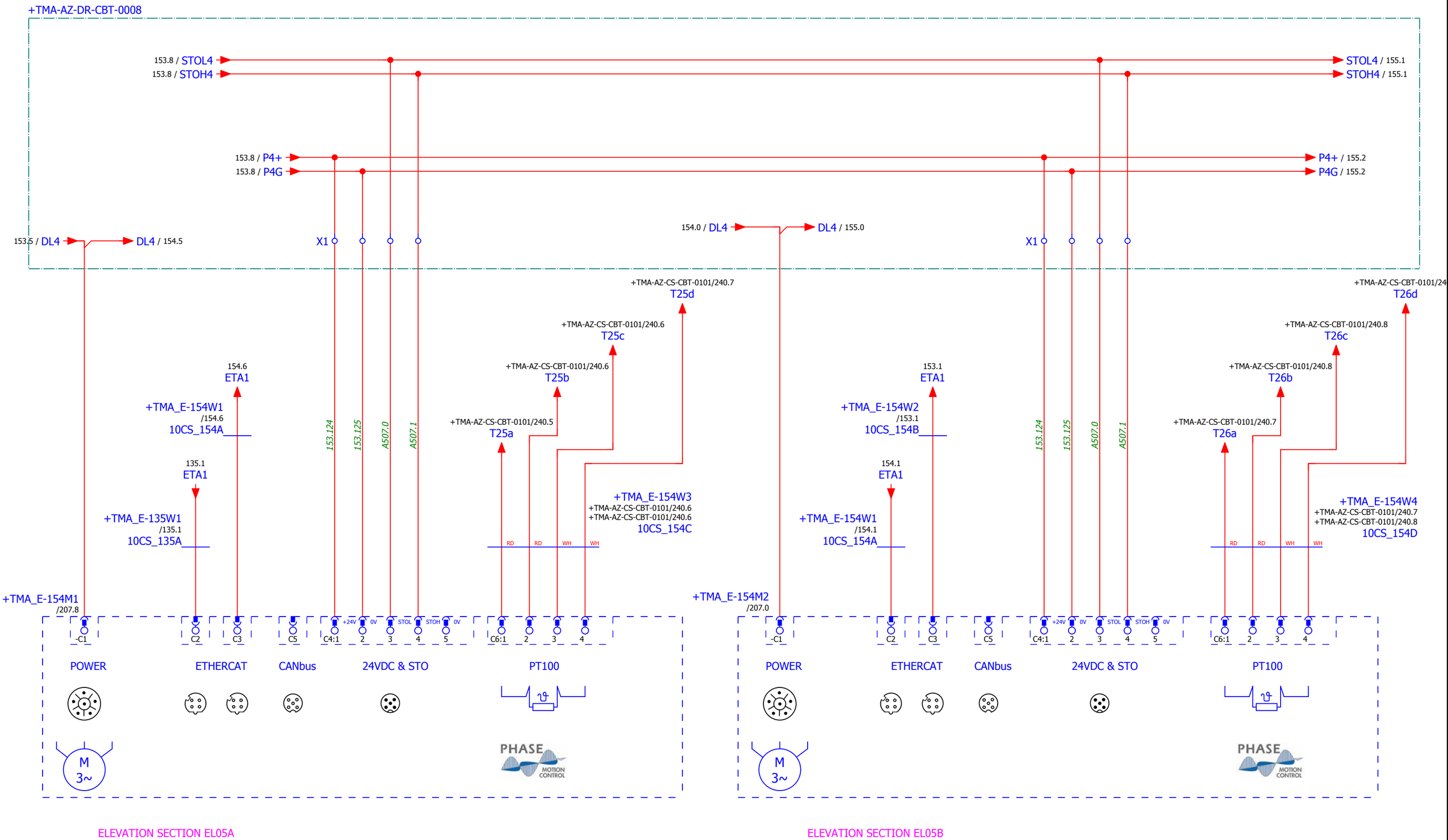

ELEVATION SECTION EL05A

ELEVATION SECTION EL05B

IK4 TEKNIKER Research Alliance

IK4-TEKNIKER
AVDA. OTAOLA 20
20600 Eibar (Gipuzkoa) Spain
Tfno.:(+34) 943 206744
Fax: (+34) 943 202757
Web: www.tekniker.es

Date	15/12/2017						
Reviewed	F.LÓPEZ	2.3	15/12/2017	JOSE MANUEL			
Drew by	JOSE MANUEL	Review	Date	Name	Review	Date	Name

3151_LSST

MCS Design Electrical Schematics

LSST TELESCOPE

Replaces | Replaced by

ELEVATION AXIS EL05A -EL05B

Customer: EMPRESARIOS AGRUPADOS
C/Magallanes, 3
28015 MADRID
91 3098000
http://www.empresariosagrupados.es/

= E1

+ TMA-AZ-CS-CBT-0001

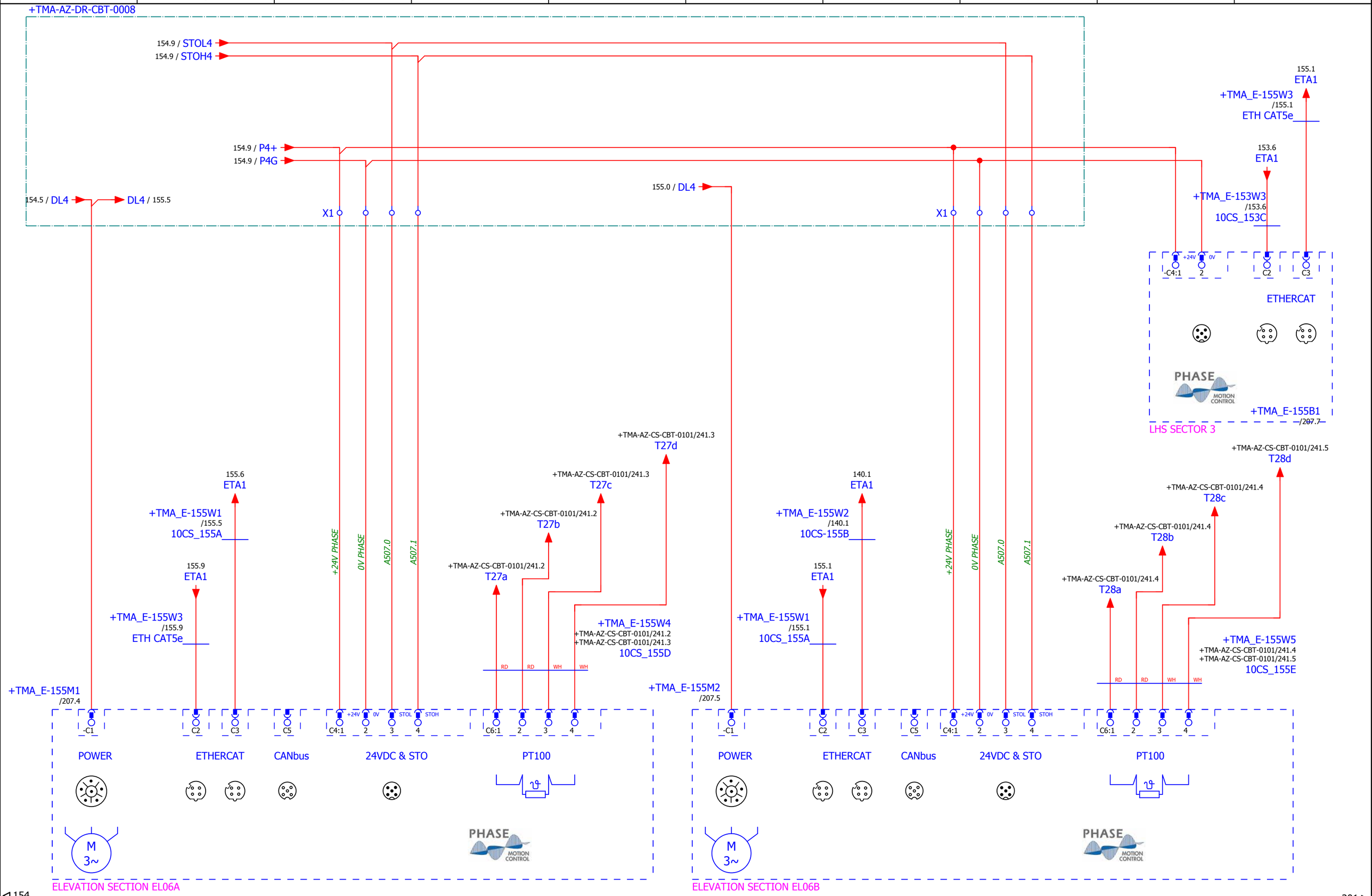

IK4 TEKNIKER Research Alliance

IK4-TEKNIKER
AVDA. OTAOLA 20
20600 Eibar (Gipuzkoa) Spain
Tfno.:(+34) 943 206744
Fax: (+34) 943 202757
Web: www.tekniker.es

Date	15/12/2017						
Reviewed	F.LÓPEZ	2.3	15/12/2017	JOSE MANUEL			
Drew by	JOSE MANUEL	Review	Date	Name	Review	Date	Name

3151_LSST

MCS Design Electrical Schematics

LSST TELESCOPE

Replaces

Replaced by

ELEVATION AXIS EL06A -EL06B

Customer:
EMPRESARIOS AGRUPADOS
C/Magallanes, 3
28015 MADRID
91 3098000
http://www.empresariosagrupados.es/

= E1

+ TMA-AZ-CS-CBT-0001

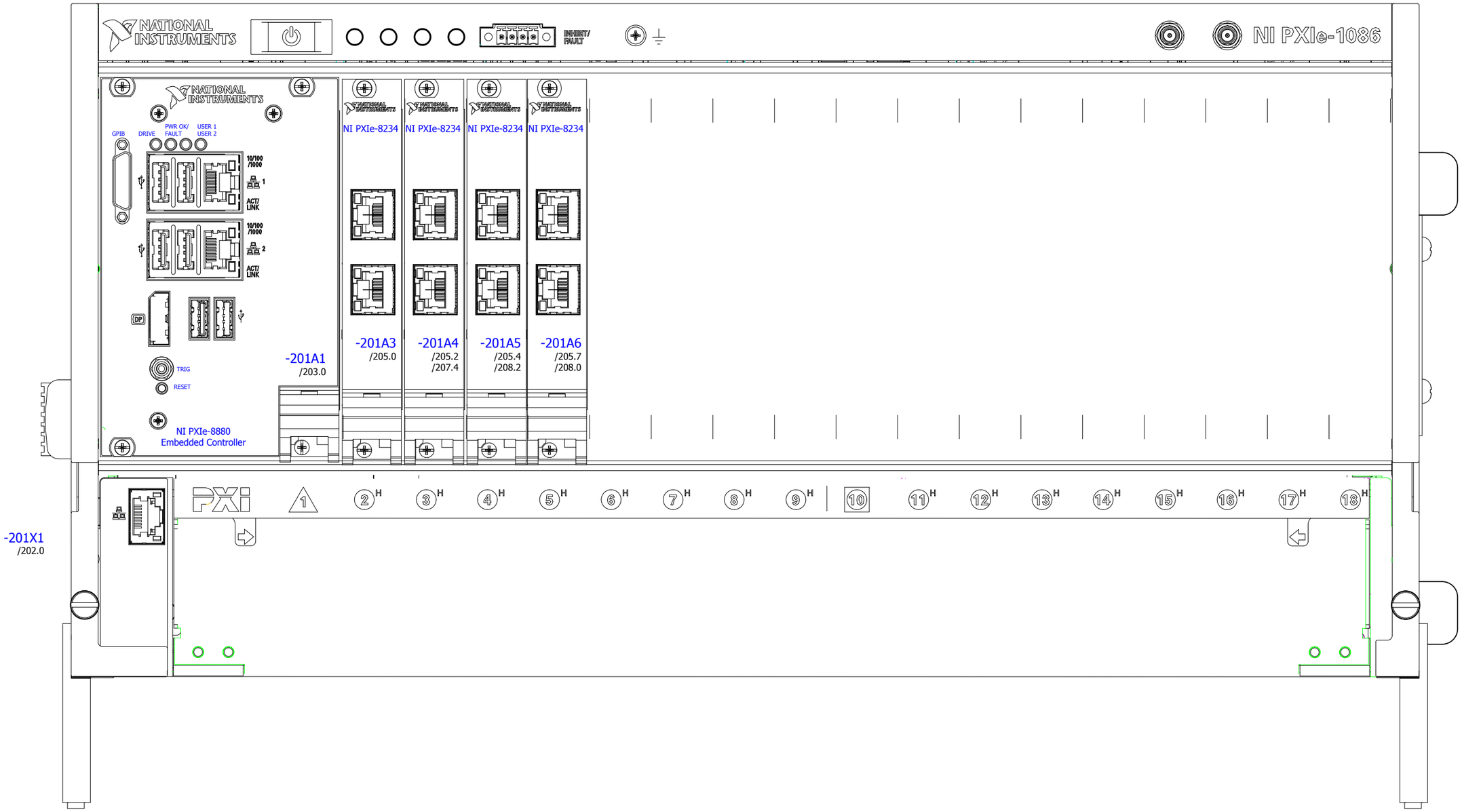

IK4 TEKNIKER Research Alliance

IK4-TEKNIKER
AVDA. OTAOLA 20
20600 Eibar (Gipuzkoa) Spain
Tfno.:(+34) 943 206744
Fax: (+34) 943 202757
Web: www.tekniker.es

Date	23/02/2017						
Reviewed	F.LÓPEZ	2.3	15/12/2017	JOSE MANUEL			
Drew by	jcastano	Review	Date	Name	Review	Date	Name

3151_LSST

MCS Design Electrical Schematics

LSST TELESCOPE

Replaces | Replaced by

PXI SYSTEM

Customer: EMPRESARIOS AGRUPADOS
C/Magallanes, 3
28015 MADRID
91 3098000
http://www.empresariosagrupados.es/

= E1

+ TMA-AZ-CS-CBT-0001

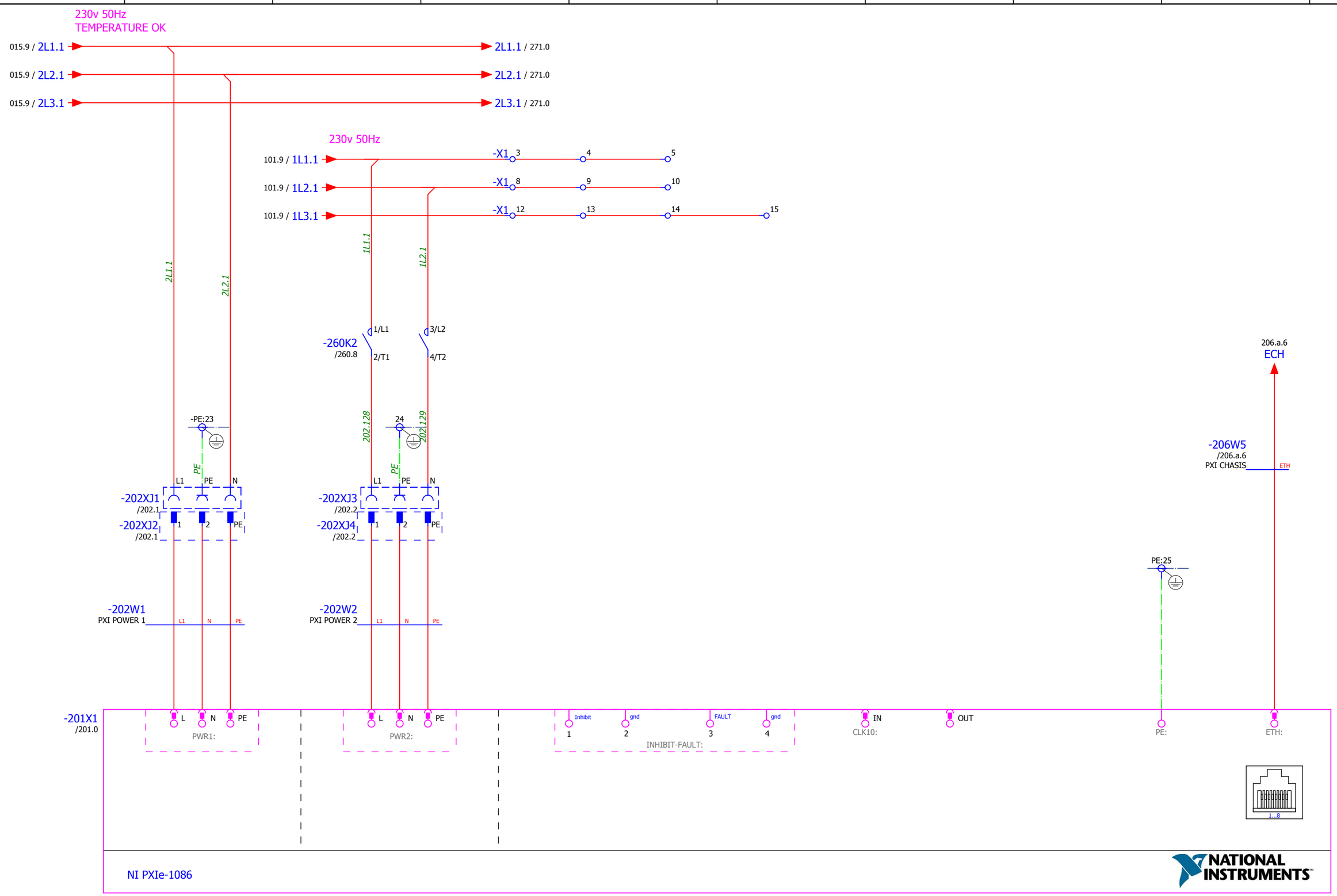

-202XJ1 = POWER BASE PWR1 PXI

-202XJ2 = POWER PLUG PWR1 PXI

-202XJ3 = POWER BASE PWR2 PXI

-202XJ4 = POWER PLUG PWR2 PXI

IK4-TEKNIKER
AVDA. OTAOLA 20
20600 Eibar (Gipuzkoa) Spain
Tfno.:(+34) 943 206744
Fax: (+34) 943 202757
Web: www.tekniker.es

Date	29/11/2017						
Reviewed	F.LÓPEZ	2.3	15/12/2017	JOSE MANUEL			
Drew by	JOSE MANUEL	Review	Date	Name	Review	Date	Name

3151_LSST

MCS Design Electrical Schematics

LSST TELESCOPE

Replaces | Replaced by

PXI POWER

Customer: EMPRESARIOS AGRUPADOS
C/Magallanes, 3
28015 MADRID
91 3098000
http://www.empresariosagrupados.es/

= E1

+ TMA-AZ-CS-CBT-0001

Page 202
Total number 710

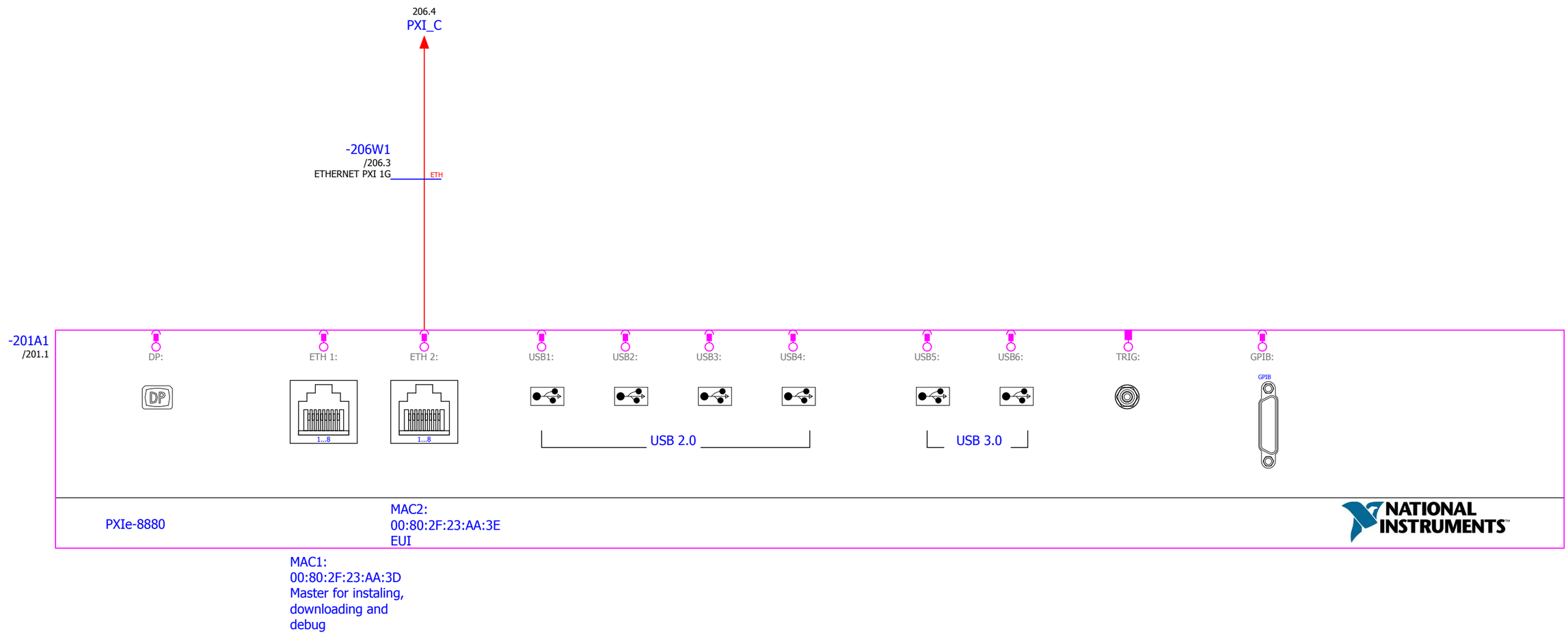

IK4 TEKNIKER Research Alliance

IK4-TEKNIKER
AVDA. OTAOLA 20
20600 Eibar (Gipuzkoa) Spain
Tfno.:(+34) 943 206744
Fax: (+34) 943 202757
Web: www.tekniker.es

Date	28/11/2017						
Reviewed	F.LÓPEZ	2.3	15/12/2017	JOSE MANUEL			
Drew by	JOSE MANUEL	Review	Date	Name	Review	Date	Name

3151_LSST

MCS Design Electrical Schematics

LSST TELESCOPE

Replaces | Replaced by

PXIe 8880 CPU

Customer: EMPRESARIOS AGRUPADOS

EMPRESARIOS AGRUPADOS
C/Magallanes, 3
28015 MADRID
91 3098000
http://www.empresariosagrupados.es/

= E1

+ TMA-AZ-CS-CBT-0001

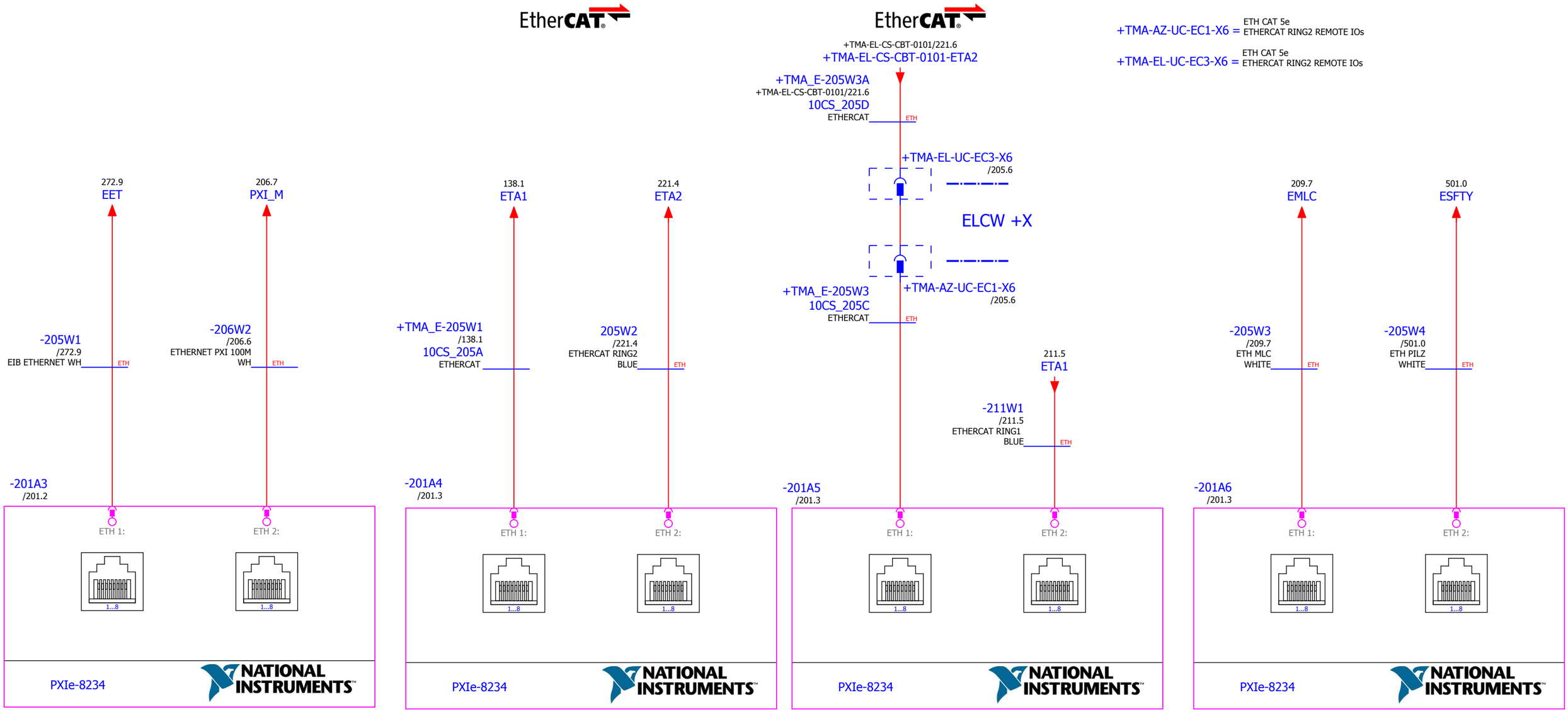

MAC-A:
00:02:25:03:38:3A
for EIB

MAC-B:
00:02:25:03:38:3B
to manage all slaves

MAC-A:
00:02:25:03:38:2A
Ethercat RING1 back

MAC-B:
00:02:25:03:38:2B
Ethercat RING2 front

MAC-A:
00:02:25:03:38:0a
Ethercat RING2 back

MAC-B:
00:02:25:03:38:0B
Ethercat RING1 front

MAC-A:
00:02:25:03:77:2A
for MLC

IK4 TEKNIKER Research Alliance
IK4-TEKNIKER
AVDA. OTAOLA 20
20600 Eibar (Gipuzkoa) Spain
Tfno.:(+34) 943 206744
Fax: (+34) 943 202757
Web: www.tekniker.es

Date	15/12/2017						
Reviewed	F.LÓPEZ	2.3	15/12/2017	JOSE MANUEL			
Drew by	JOSE MANUEL	Review	Date	Name	Review	Date	Name

3151_LSST
MCS Design Electrical Schematics
LSST TELESCOPE
Replaces
Replaced by

PXIe ETHERNET

Customer: EMPRESARIOS AGRUPADOS
C/Magallanes, 3
28015 MADRID
91 3098000
http://www.empresariosagrupados.es/

= E1
+ TMA-AZ-CS-CBT-0001

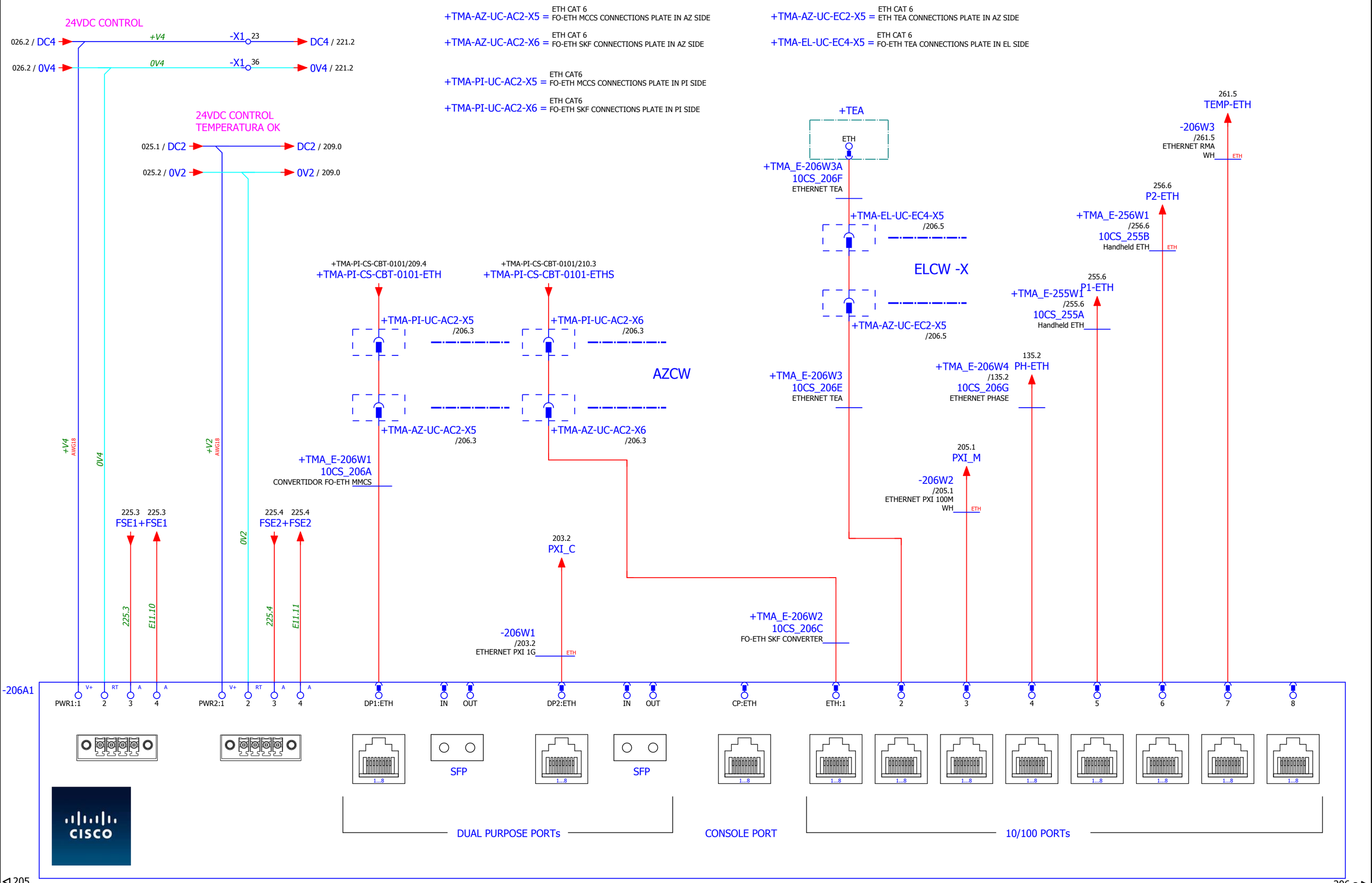

IK4 TEKNIKER Research Alliance
IK4-TEKNIKER
AVDA. OTAOLA 20
20600 Eibar (Gipuzkoa) Spain
Tfno.:(+34) 943 206744
Fax: (+34) 943 202757
Web: www.tekniker.es

Date	15/12/2017						
Reviewed	F.LÓPEZ	2.3	15/12/2017	JOSE MANUEL			
Drew by	JOSE MANUEL	Review	Date	Name	Review	Date	Name

3151_LSST
MCS Design Electrical Schematics
LSST TELESCOPE
Replaces
Replaced by

ETHERNET SWITCH

Customer:
EMPRESARIOS AGRUPADOS
C/Magallanes, 3
28015 MADRID
91 3098000
http://www.empresariosagrupados.es/

= E1
+ TMA-AZ-CS-CBT-0001

+TMA-AZ-UC-EC1-X3 = ETH CAT 5a
ETH HHDCONNECTIONS PLATE IN AZ SIDE

+TMA-EL-UC-EC3-X3 = ETH CAT 5a
ETH HHDCONNECTIONS PLATE IN EL SIDE

+TMA-AZ-UC-EC2-X6 = ETH CAT 5a
ETH HHDCONNECTIONS PLATE IN AZ SIDE

+TMA-EL-UC-EC4-X6 = ETH CAT 5a
ETH HHDCONNECTIONS PLATE IN EL SIDE

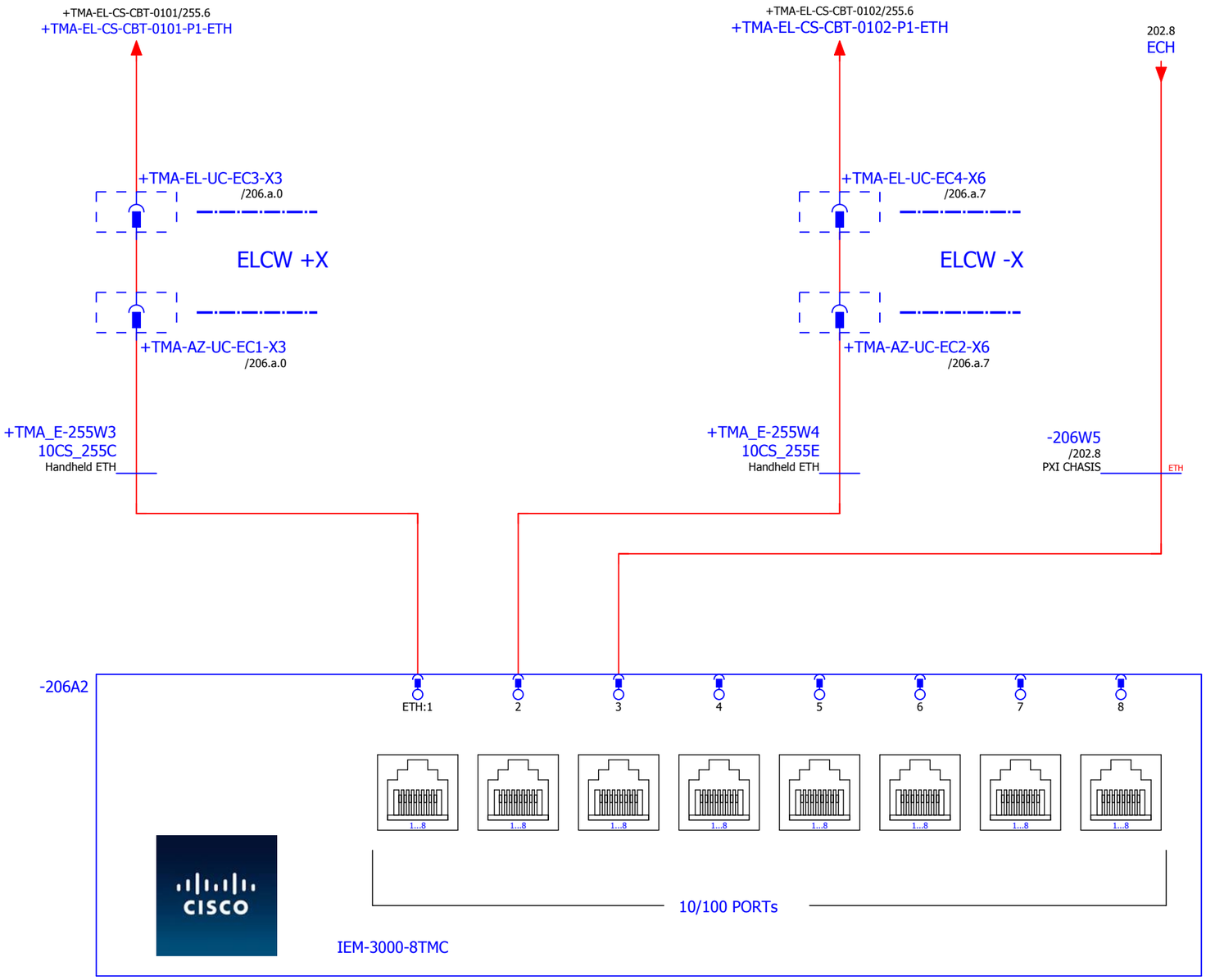

IK4 TEKNIKER Research Alliance

IK4-TEKNIKER
AVDA. OTAOLA 20
20600 Eibar (Gipuzkoa) Spain
Tfno.:(+34) 943 206744
Fax: (+34) 943 202757
Web: www.tekniker.es

Date	15/12/2017						
Reviewed	F.LÓPEZ	2.3	15/12/2017	JOSE MANUEL			
Drew by	JOSE MANUEL	Review	Date	Name	Review	Date	Name

3151_LSST

MCS Design Electrical Schematics

LSST TELESCOPE

Replaces | Replaced by

ETHERNET SWITCH

Customer: EMPRESARIOS AGRUPADOS
C/Magallanes, 3
28015 MADRID
91 3098000
http://www.empresariosagrupados.es/

= E1
+ TMA-AZ-CS-CBT-0001

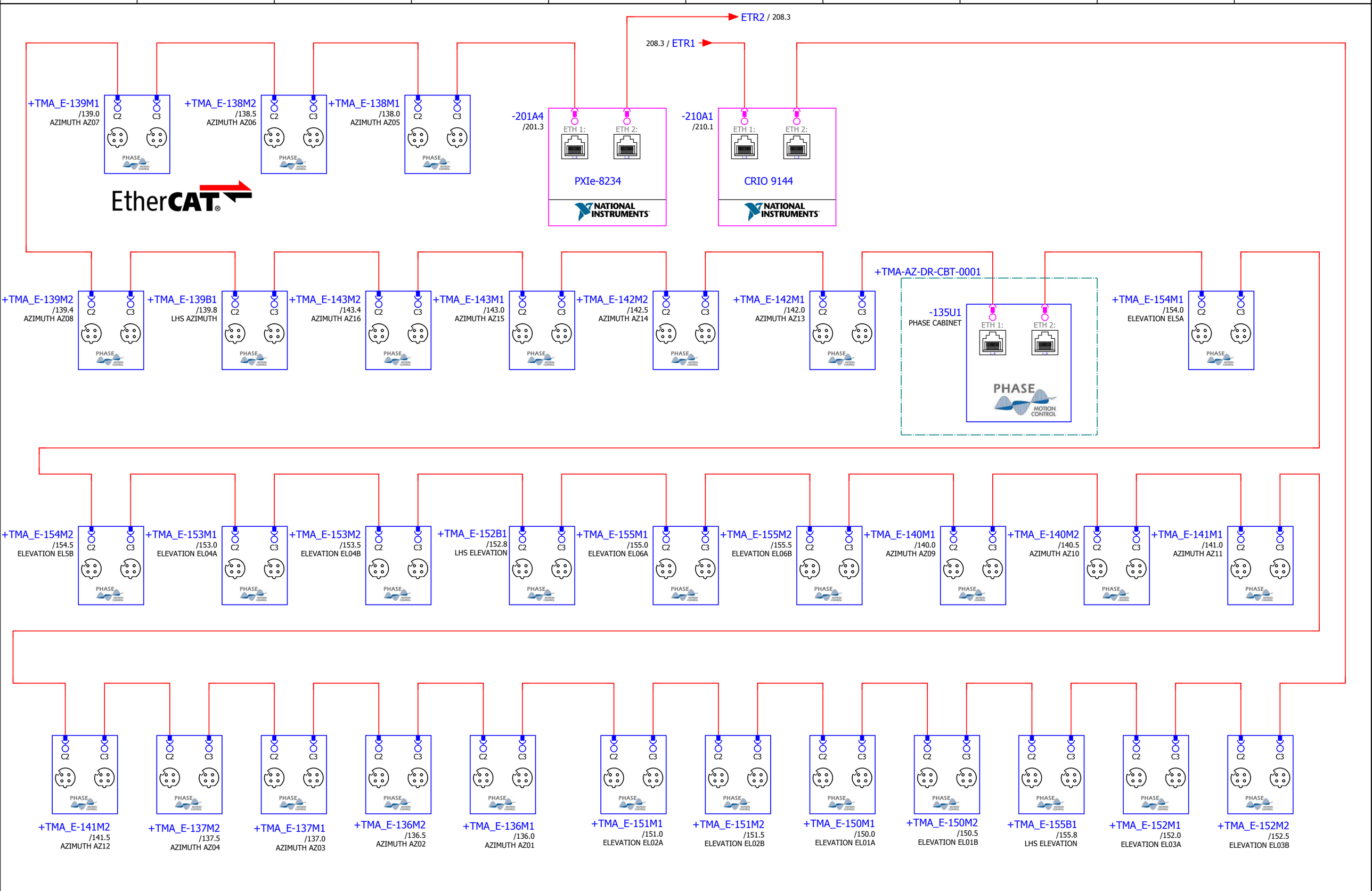

◁ 206.a

208 ▷

IK4-TEKNIKER
AVDA. OTAOLA 20
20600 Eibar (Gipuzkoa) Spain
Tfno.:(+34) 943 206744
Fax: (+34) 943 202757
Web: www.tekniker.es

Date	27/01/2017							
Reviewed	F.LÓPEZ	2.3	15/12/2017	JOSE MANUEL				
Drew by	jcastano	Review	Date	Name	Review	Date	Name	

3151_LSST

MCS Design Electrical Schematics

LSST TELESCOPE

Replaces | Replaced by

ETHERCAT NETWORK RING 1

Customer: EMPRESARIOS AGRUPADOS
C/Magallanes, 3
28015 MADRID
91 3098000
http://www.empresariosagrupados.es/

= E1

+ TMA-AZ-CS-CBT-0001

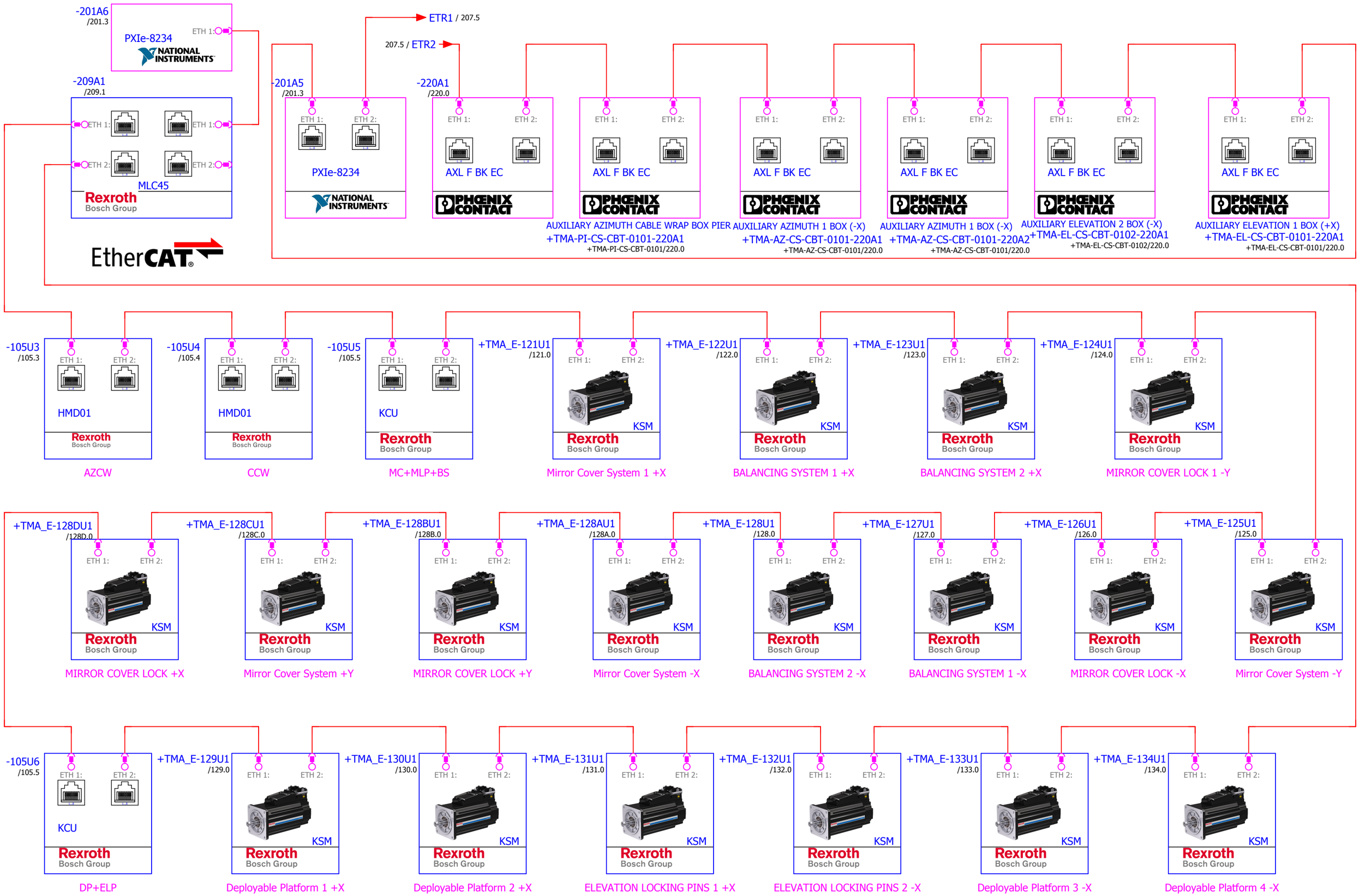

◁ 207

209 ▷

IK4 TEKNIKER Research Alliance
IK4-TEKNIKER
AVDA. OTAOLA 20
20600 Eibar (Gipuzkoa) Spain
Tfno.:(+34) 943 206744
Fax: (+34) 943 202757
Web: www.tekniker.es

Date	23/02/2017						
Reviewed	F.LÓPEZ	2.3	15/12/2017	JOSE MANUEL			
Drew by	jcastano	Review	Date	Name	Review	Date	Name

3151_LSST
MCS Design Electrical Schematics
LSST TELESCOPE

Replaces | Replaced by

ETHERCAT NETWORK RING 2

Customer: EMPRESARIOS AGRUPADOS
C/Magallanes, 3
28015 MADRID
91 3098000
http://www.empresariosagrupados.es/

= E1
+ TMA-AZ-CS-CBT-0001

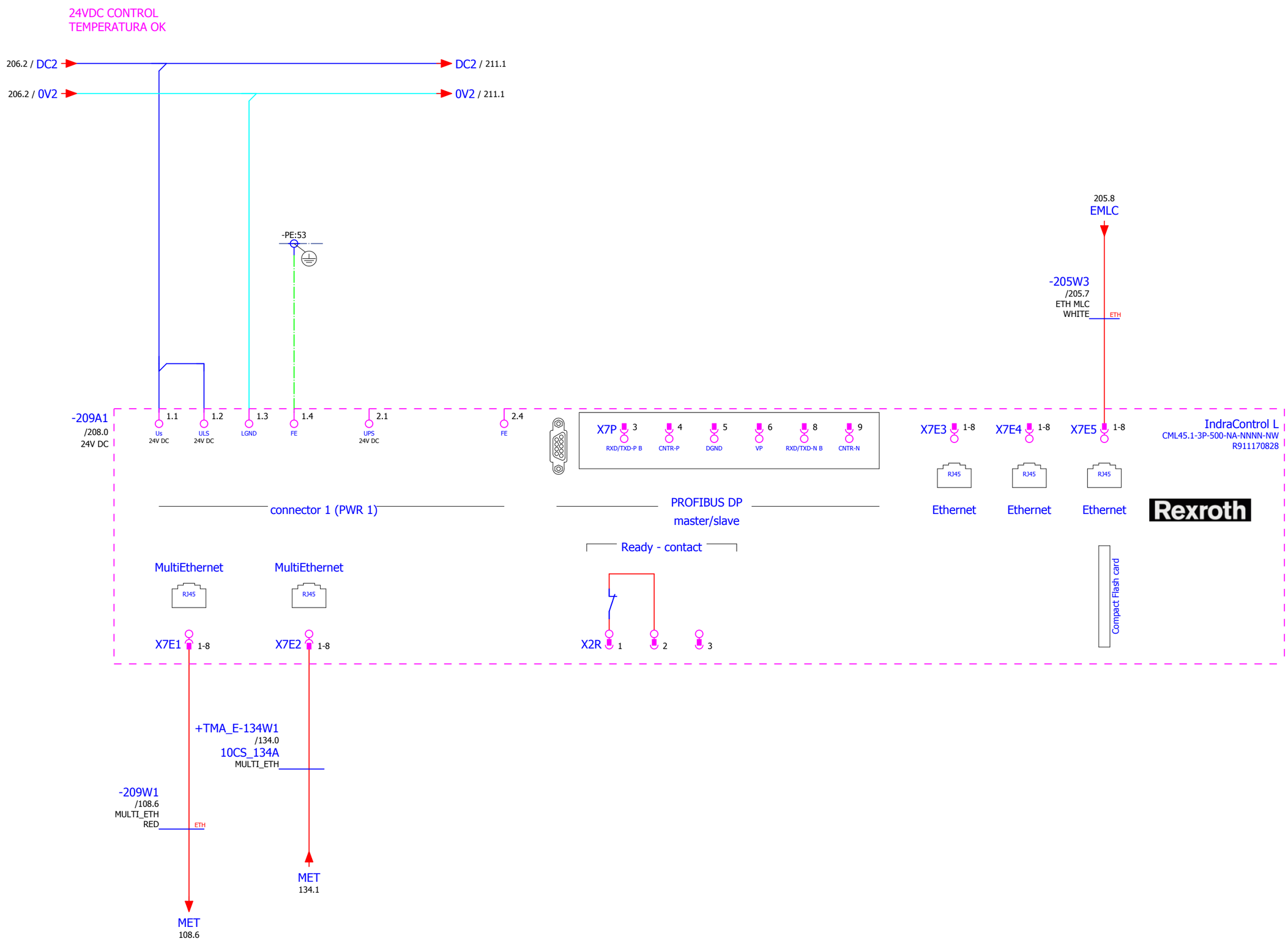

◁ 208

210 ▷

IK4 TEKNIKER Research Alliance
IK4-TEKNIKER
AVDA. OTAOLA 20
20600 Eibar (Gipuzkoa) Spain
Tfno.:(+34) 943 206744
Fax: (+34) 943 202757
Web: www.tekniker.es

Date	15/12/2017						
Reviewed	F.LÓPEZ	2.3	15/12/2017	JOSE MANUEL			
Drew by	JOSE MANUEL	Review	Date	Name	Review	Date	Name

3151_LSST
MCS Design Electrical Schematics
LSST TELESCOPE

Replaces | Replaced by

CML CONTROL

Customer:
EMPRESARIOS AGRUPADOS
C/Magallanes, 3
28015 MADRID
91 3098000
http://www.empresariosagrupados.es/

= E1
+ TMA-AZ-CS-CBT-0001

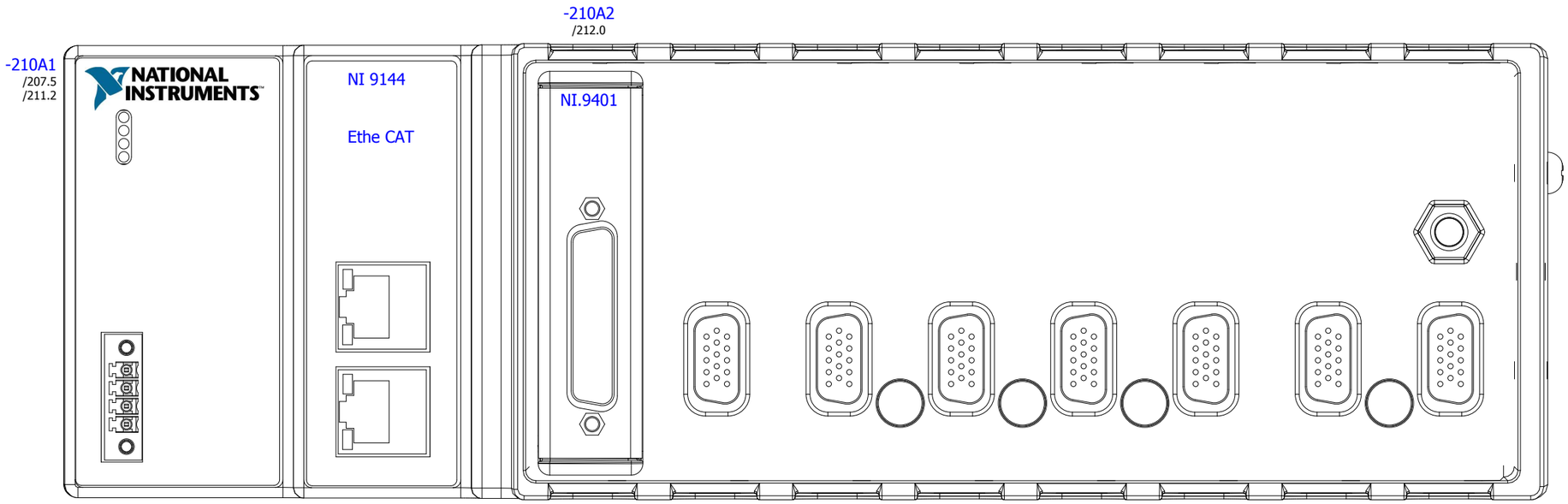

IK4 TEKNIKER Research Alliance
IK4-TEKNIKER
AVDA. OTAOLA 20
20600 Eibar (Gipuzkoa) Spain
Tfno.:(+34) 943 206744
Fax: (+34) 943 202757
Web: www.tekniker.es

Date	23/02/2017						
Reviewed	F.LÓPEZ	2.3	15/12/2017	JOSE MANUEL			
Drew by	jcastano	Review	Date	Name	Review	Date	Name

3151_LSST
MCS Design Electrical Schematics
LSST TELESCOPE
Replaces
Replaced by

cRIO System

Customer:
EMPRESARIOS AGRUPADOS
C/Magallanes, 3
28015 MADRID
91 3098000
http://www.empresariosagrupados.es/

= E1
+ TMA-AZ-CS-CBT-0001

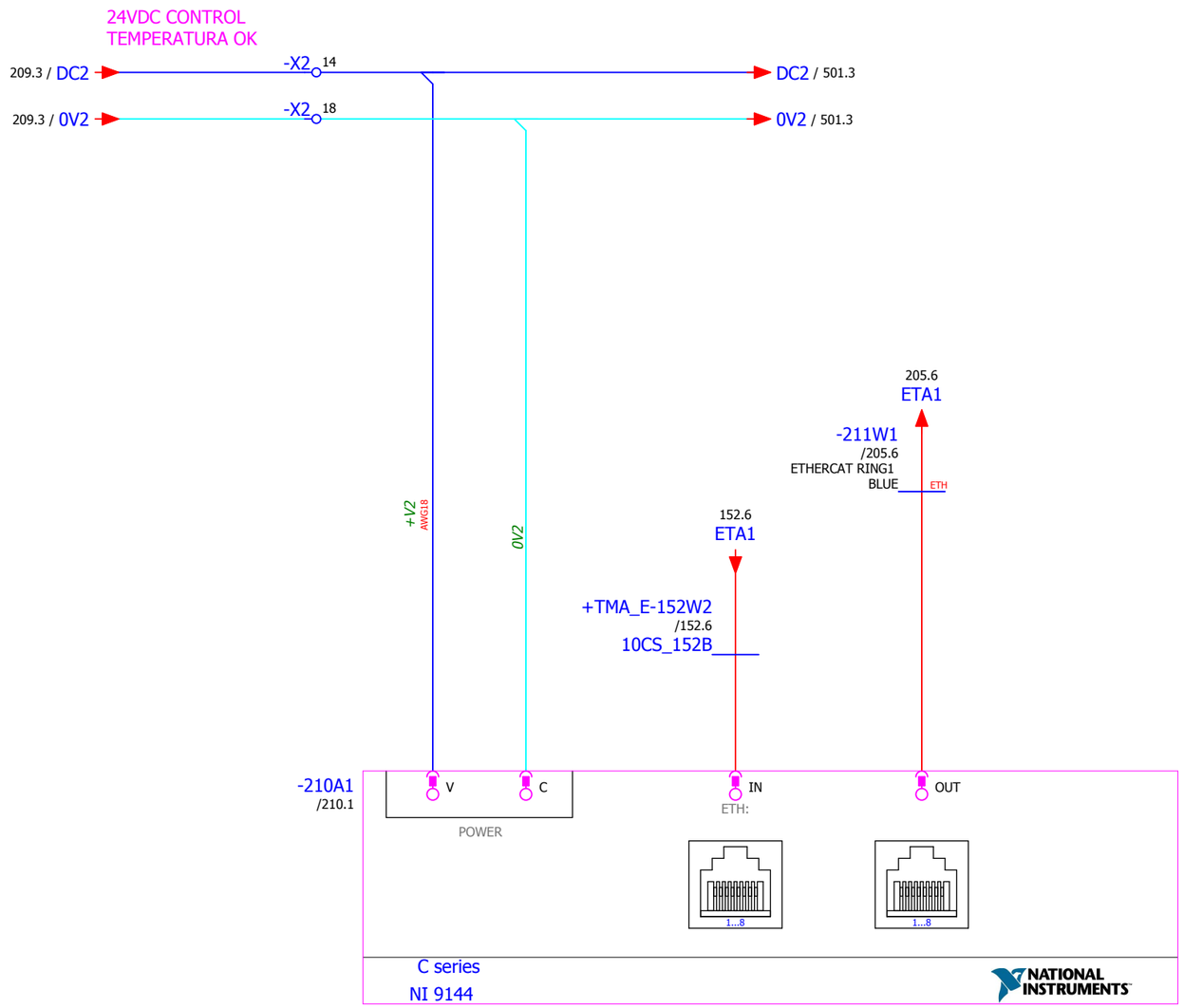

IK4 TEKNIKER Research Alliance
IK4-TEKNIKER
AVDA. OTAOLA 20
20600 Eibar (Gipuzkoa) Spain
Tfno.:(+34) 943 206744
Fax: (+34) 943 202757
Web: www.tekniker.es

Date	15/12/2017						
Reviewed	F.LÓPEZ	2.3	15/12/2017	JOSE MANUEL			
Drew by	JOSE MANUEL	Review	Date	Name	Review	Date	Name

3151_LSST
MCS Design Electrical Schematics
LSST TELESCOPE
Replaces
Replaced by

cRIO POWER & EtherCAT

Customer:
EMPRESARIOS AGRUPADOS
C/Magallanes, 3
28015 MADRID
91 3098000
http://www.empresariosagrupados.es/

= E1
+ TMA-AZ-CS-CBT-0001

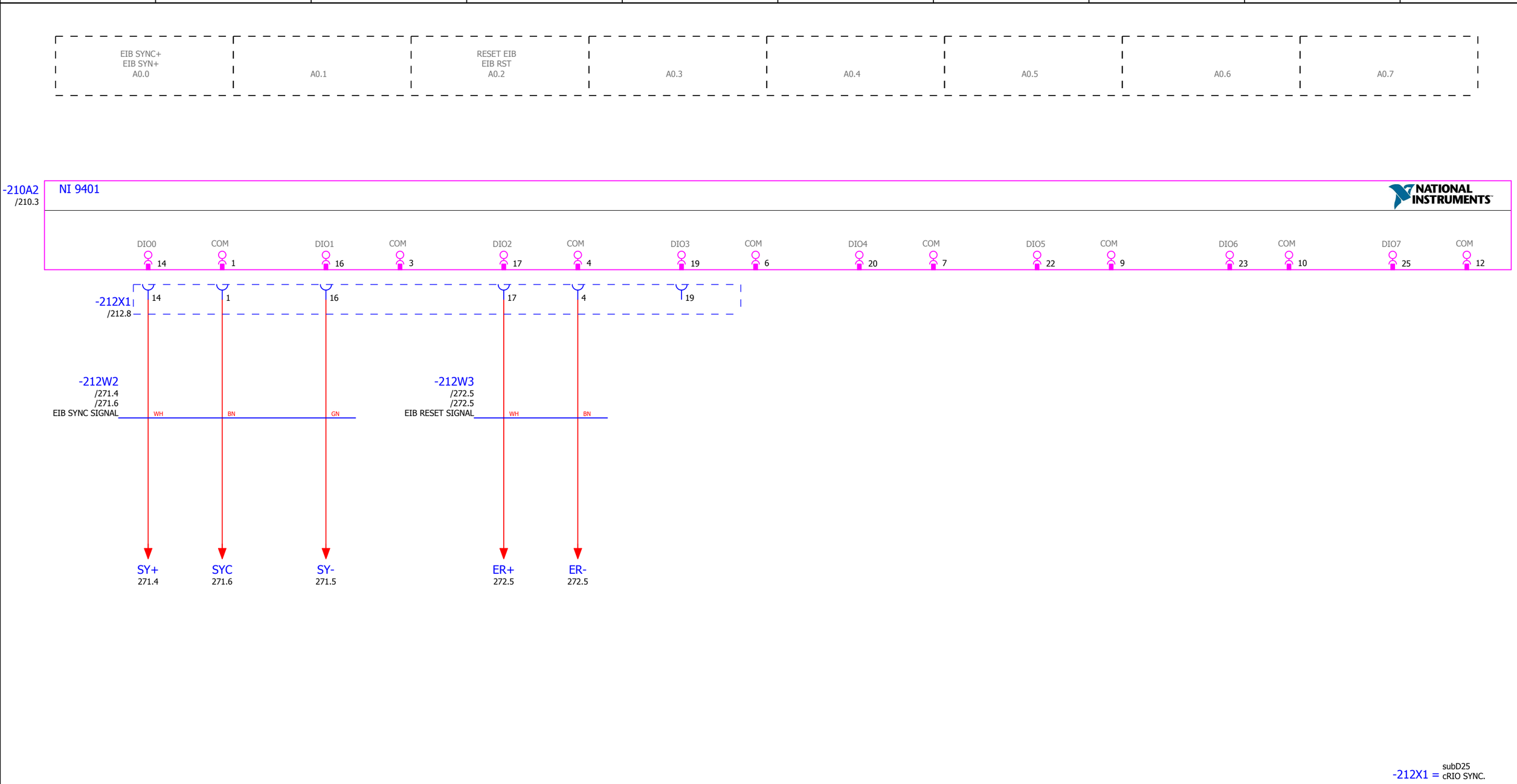

IK4 TEKNIKER Research Alliance

IK4-TEKNIKER
AVDA. OTAOLA 20
20600 Eibar (Gipuzkoa) Spain
Tfno.:(+34) 943 206744
Fax: (+34) 943 202757
Web: www.tekniker.es

Date	15/12/2017						
Reviewed	F.LÓPEZ	2.3	15/12/2017	JOSE MANUEL			
Drew by	JOSE MANUEL	Review	Date	Name	Review	Date	Name

3151_LSST

MCS Design Electrical Schematics

LSST TELESCOPE

Replaces | Replaced by

Synchronization Signals

Customer: EMPRESARIOS AGRUPADOS

EMPRESARIOS AGRUPADOS
C/Magallanes, 3
28015 MADRID
91 3098000
http://www.empresariosagrupados.es/

= E1

+ TMA-AZ-CS-CBT-0001

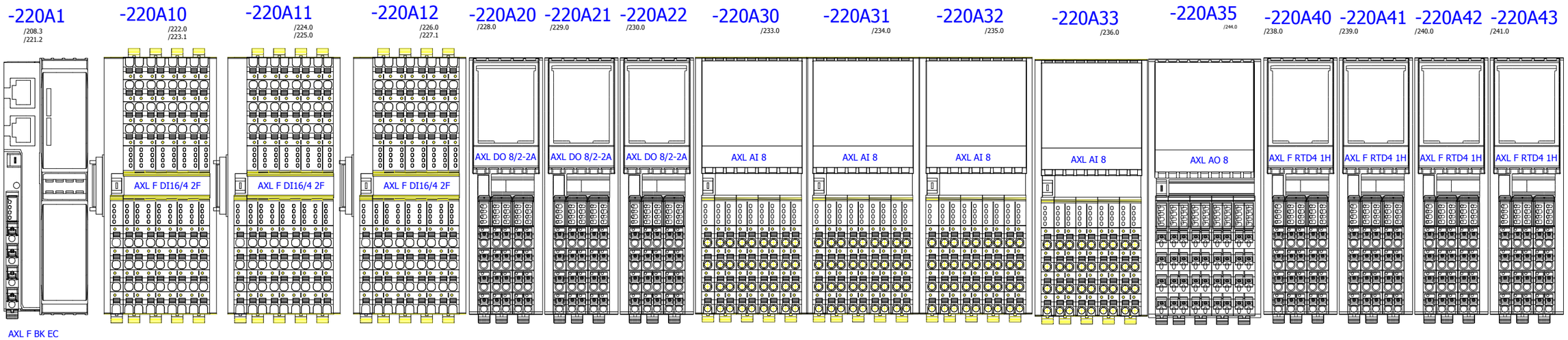

IK4-TEKNIKER
AVDA. OTAOLA 20
20600 Eibar (Gipuzkoa) Spain
Tfno.:(+34) 943 206744
Fax: (+34) 943 202757
Web: www.tekniker.es

Date	15/12/2017						
Reviewed	F.LÓPEZ	2.3	15/12/2017	JOSE MANUEL			
Drew by	JOSE MANUEL	Review	Date	Name	Review	Date	Name

3151_LSST

MCS Design Electrical Schematics

LSST TELESCOPE

Replaces | Replaced by

DISTRIBUTED IOs

Customer: EMPRESARIOS AGRUPADOS
C/Magallanes, 3
28015 MADRID
91 3098000
http://www.empresariosagrupados.es/

= E1
+ TMA-AZ-CS-CBT-0001

+TMA-AZ-UC-AC2-X7 = ETH CAT 5e
ETHERCAT RING2 REMOTE IOs

+TMA-PI-UC-AC2-X7 = ETH CAT 5e
ETHERCAT RING2 REMOTE IOs

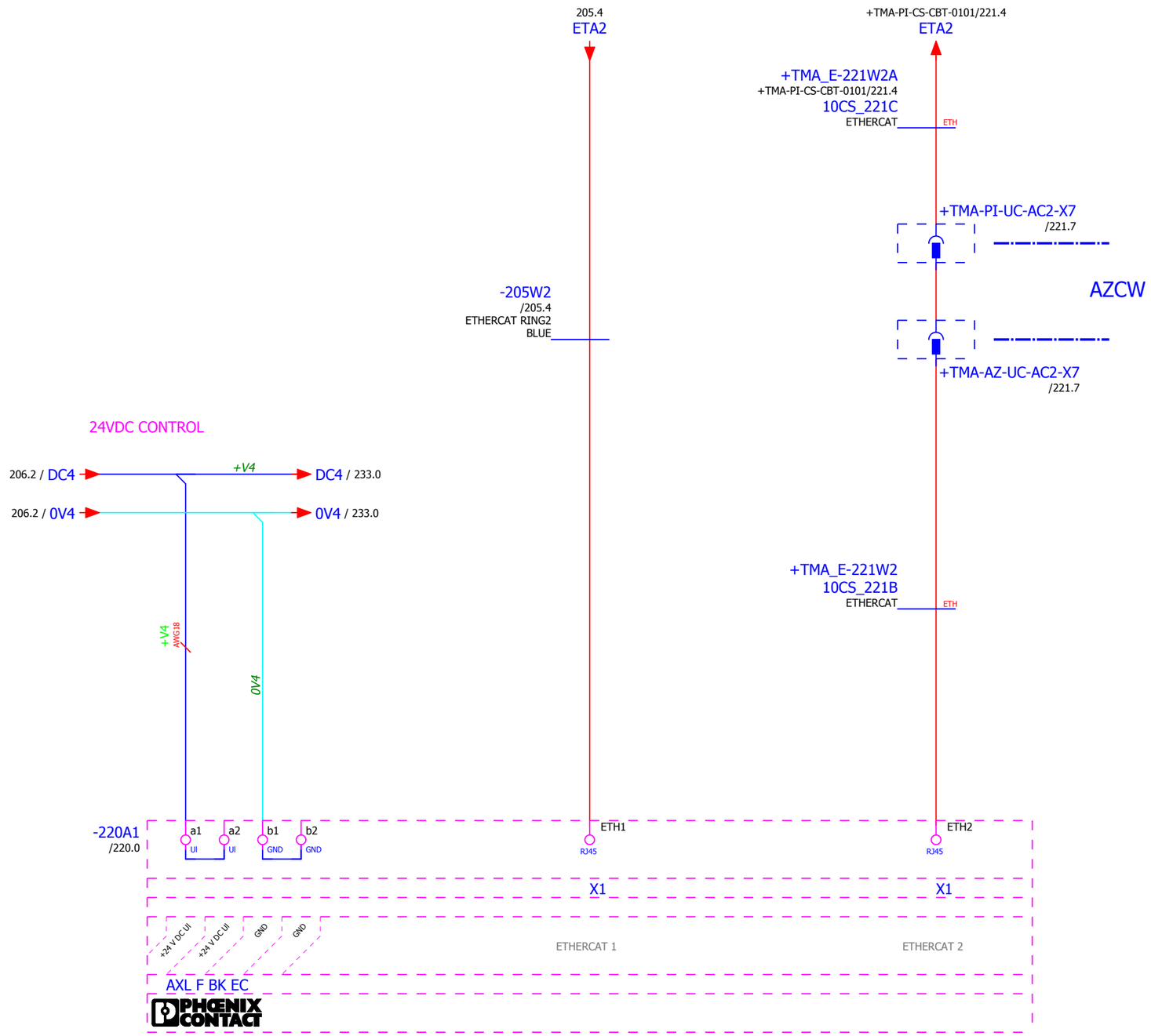

◁ 220

222 ▷

IK4-TEKNIKER
AVDA. OTAOLA 20
20600 Eibar (Gipuzkoa) Spain
Tfno.:(+34) 943 206744
Fax: (+34) 943 202757
Web: www.tekniker.es

Date	15/12/2017						
Reviewed	F.LÓPEZ	2.3	15/12/2017	JOSE MANUEL			
Drew by	JOSE MANUEL	Review	Date	Name	Review	Date	Name

3151_LSST
MCS Design Electrical Schematics
LSST TELESCOPE

Replaces | Replaced by

DISTRIBUTED IOs POWER & ETHERCAT

Customer: EMPRESARIOS AGRUPADOS
C/Magallanes, 3
28015 MADRID
91 3098000
http://www.empresariosagrupados.es/

= E1
+ TMA-AZ-CS-CBT-0001

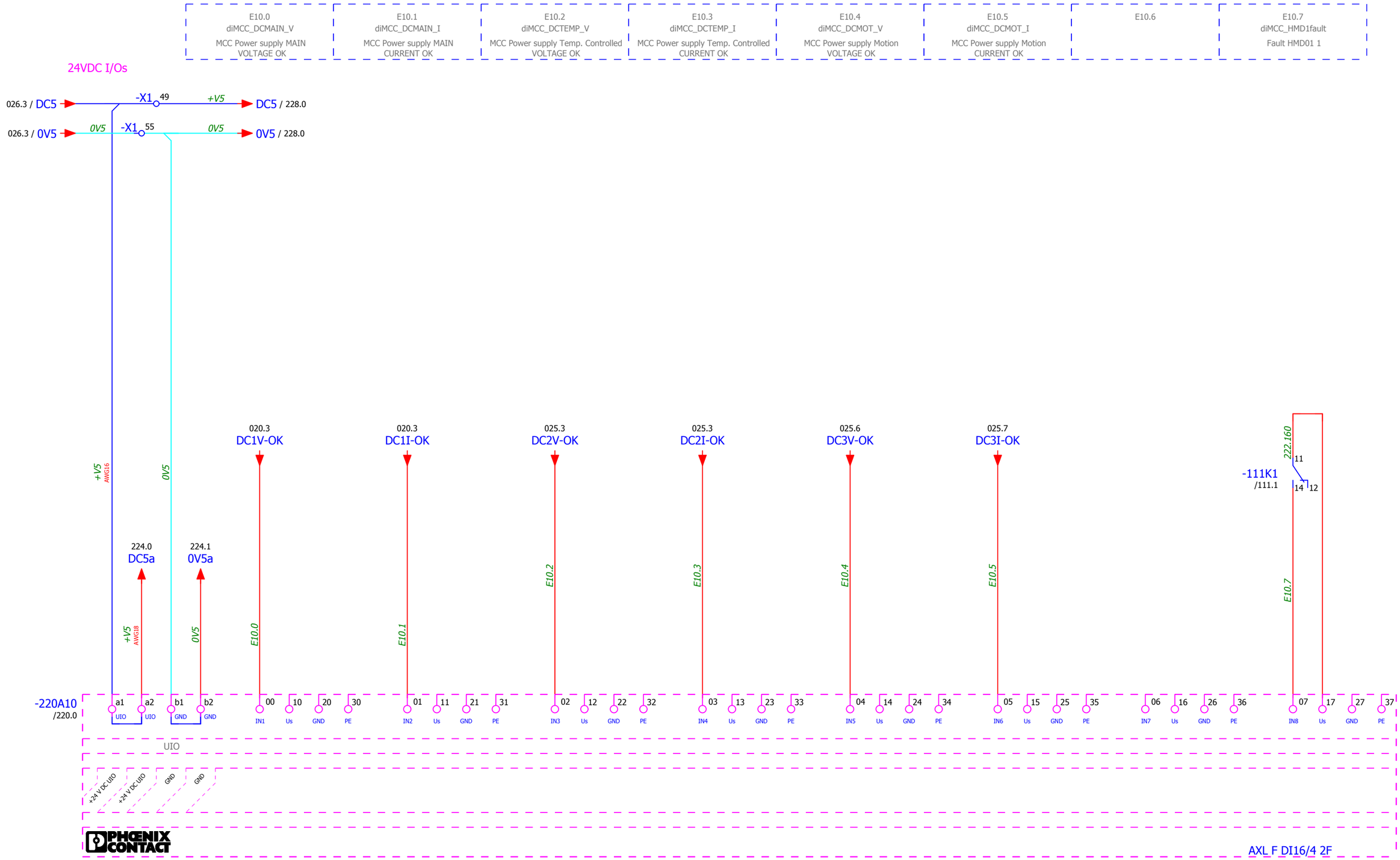

◁ 221

223 ▷

IK4-TEKNIKER
AVDA. OTAOLA 20
20600 Eibar (Gipuzkoa) Spain
Tfno.:(+34) 943 206744
Fax: (+34) 943 202757
Web: www.tekniker.es

Date	29/11/2017						
Reviewed	F.LÓPEZ	2.3	15/12/2017	JOSE MANUEL			
Drew by	JOSE MANUEL	Review	Date	Name	Review	Date	Name

3151_LSST

MCS Design Electrical Schematics

LSST TELESCOPE

Replaces | Replaced by

DISTRIBUTED DIGITAL INPUT MODULE

Customer:
EMPRESARIOS AGRUPADOS
C/Magallanes, 3
28015 MADRID
91 3098000
http://www.empresariosagrupados.es/

= E1

+ TMA-AZ-CS-CBT-0001

E10.8	E10.9	E10.10	E10.11	E10.12	E10.13	E10.14	E10.15
diMCC_HMD2fault	diMCC_HMD3fault	diMCC_HMD4fault	diMCC_HMVon	diMCC_HMVoff	diMCC_HMVoverT	diMCC_HMVbusdc	diMCC_HMD1rdy
Fault HMD01 2	Fault HMD01 3	Fault HMD01 4	Internal Mains contactor ON	Internal Mains contactor OFF	WARNING TEMPERATURE	BUS DC OK	READY HMD AZIMUTH CABLE WRAP

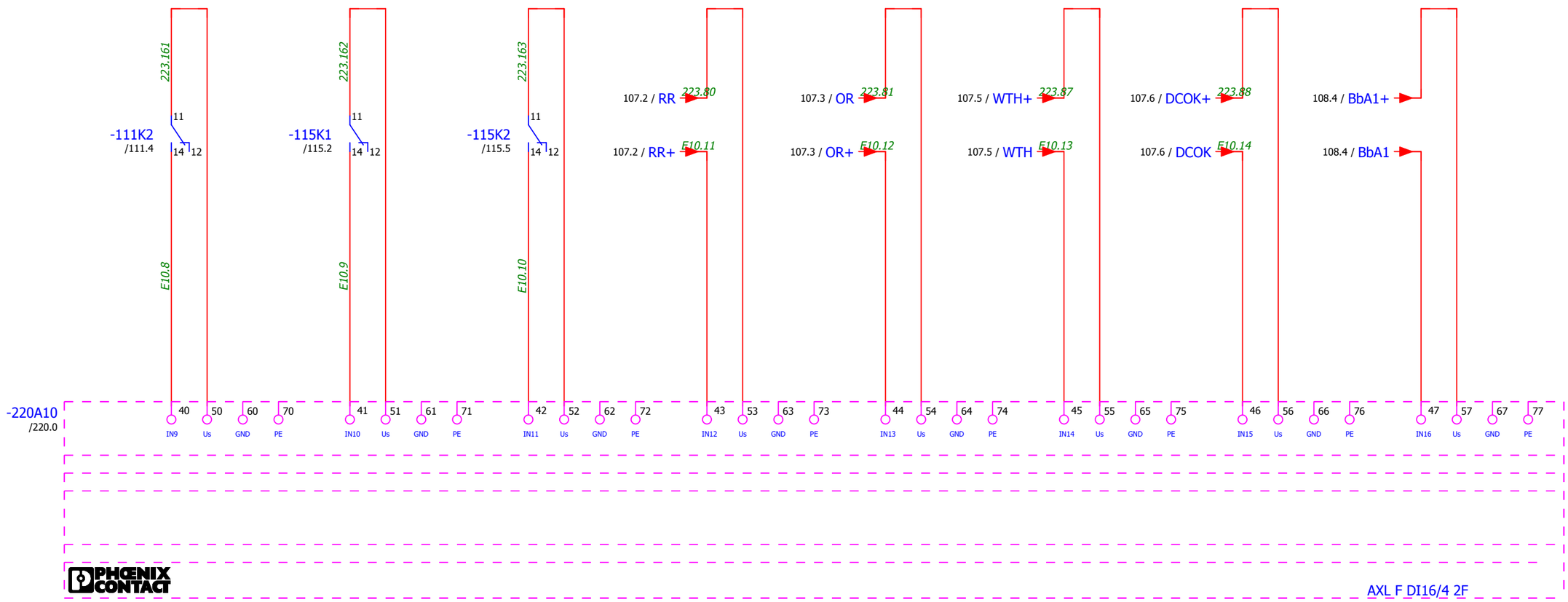

IK4 TEKNIKER Research Alliance
IK4-TEKNIKER
AVDA. OTAOLA 20
20600 Eibar (Gipuzkoa) Spain
Tfno.:(+34) 943 206744
Fax: (+34) 943 202757
Web: www.tekniker.es

Date	28/11/2017						
Reviewed	F.LÓPEZ	2.3	15/12/2017	JOSE MANUEL			
Drew by	JOSE MANUEL	Review	Date	Name	Review	Date	Name

3151_LSST
MCS Design Electrical Schematics
LSST TELESCOPE

Replaces | Replaced by

DISTRIBUTED DIGITAL INPUT MODULE

Customer: EMPRESARIOS AGRUPADOS
C/Magallanes, 3
28015 MADRID
91 3098000
http://www.empresariosagrupados.es/

= E1
+ TMA-AZ-CS-CBT-0001

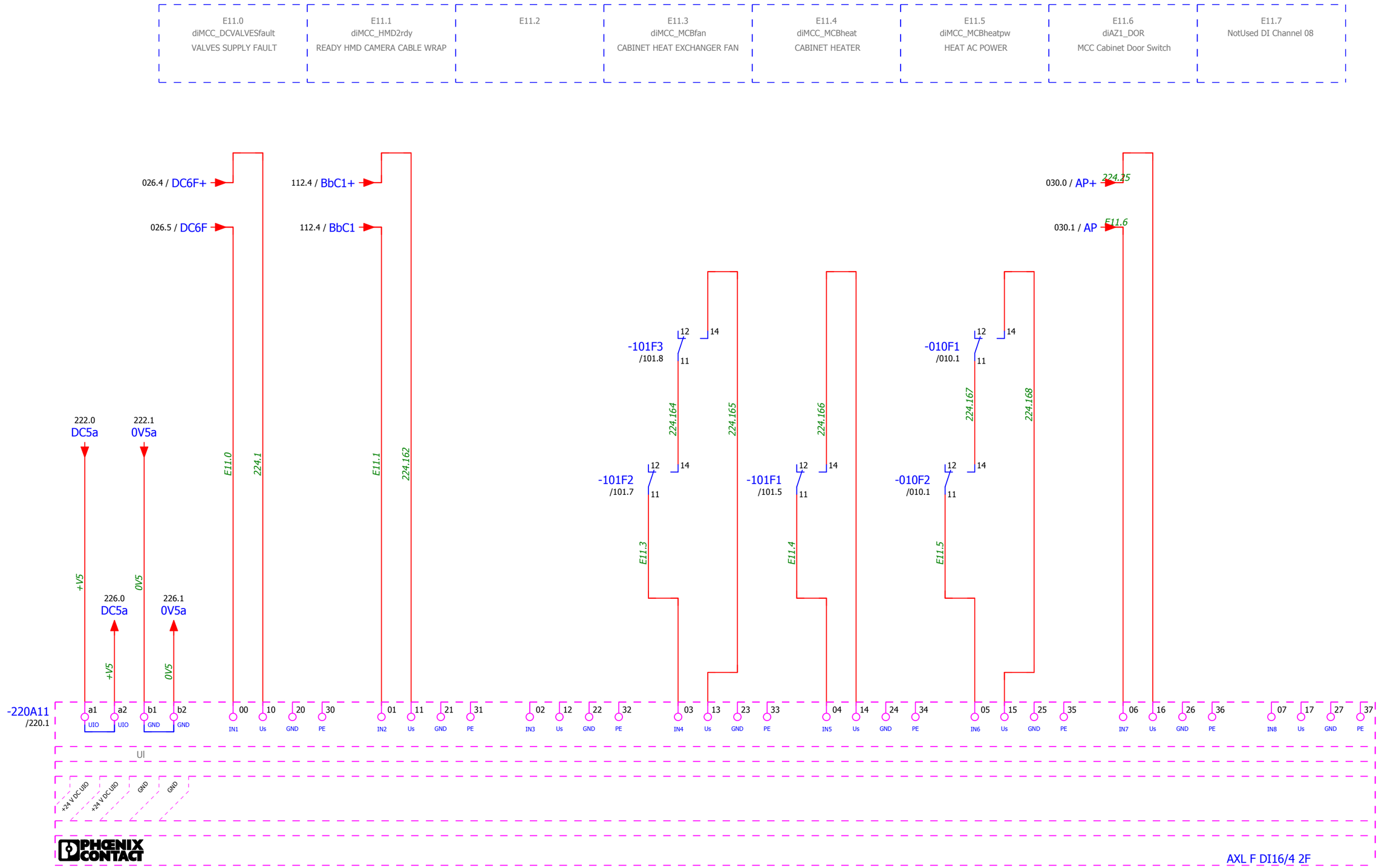

IK4 TEKNIKER Research Alliance

IK4-TEKNIKER
AVDA. OTAOLA 20
20600 Eibar (Gipuzkoa) Spain
Tfno.:(+34) 943 206744
Fax: (+34) 943 202757
Web: www.tekniker.es

Date	28/11/2017						
Reviewed	F.LÓPEZ	2.3	15/12/2017	JOSE MANUEL			
Drew by	JOSE MANUEL	Review	Date	Name	Review	Date	Name

3151_LSST

MCS Design Electrical Schematics

LSST TELESCOPE

Replaces | Replaced by

DISTRIBUTED DIGITAL INPUT MODULE

Customer: EMPRESARIOS AGRUPADOS
C/Magallanes, 3
28015 MADRID
91 3098000
http://www.empresariosagrupados.es/

= E1

+ TMA-AZ-CS-CBT-0001

E11.8	E11.9	E11.10	E11.11	E11.12	E11.13	E11.14	E11.15
diAZP_MCB	diAZP_CC	diMCC_CISfaultmajor	diMCC_CISfaultminor	diHH1_A_POS	diHH1_B_POS	diHH1_C_POS	NotUsed DI Channel 16
AZIMUTH PANEL ANY MCB TRIPPED	AZIMUTH PANEL CONTACTOR CLOSED	Fault Major Ethernet Cisco Switch	Fault Minor Ethernet Cisco Switch	Hand Held 1 selector A position	Hand Held 1 selector B position	Hand Held 1 selector C position	

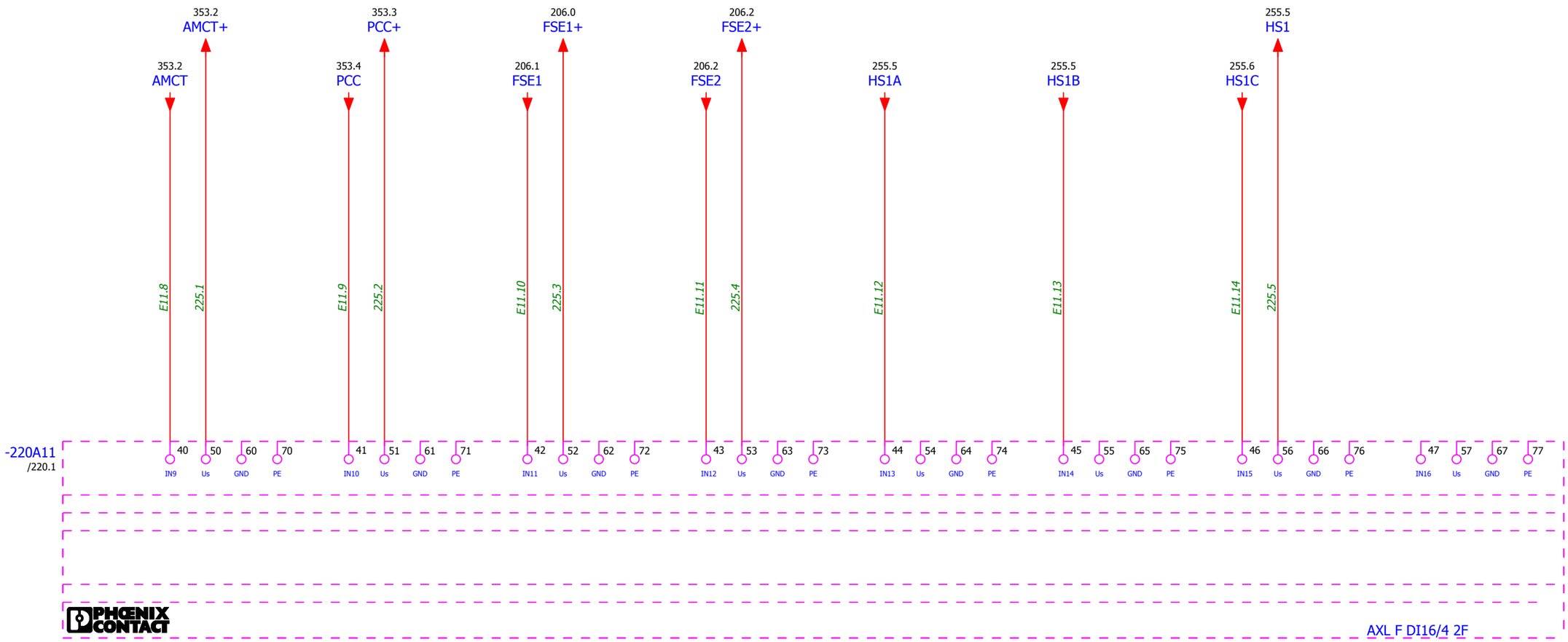

IK4 TEKNIKER Research Alliance
IK4-TEKNIKER
AVDA. OTAOLA 20
20600 Eibar (Gipuzkoa) Spain
Tfno.:(+34) 943 206744
Fax: (+34) 943 202757
Web: www.tekniker.es

Date	14/12/2017						
Reviewed	F.LÓPEZ	2.3	15/12/2017	JOSE MANUEL			
Drew by	JOSE MANUEL	Review	Date	Name	Review	Date	Name

3151_LSST
MCS Design Electrical Schematics
LSST TELESCOPE
Replaces
Replaced by

DISTRIBUTED DIGITAL INPUT MODULE

Customer:
EMPRESARIOS AGRUPADOS
C/Magallanes, 3
28015 MADRID
91 3098000
http://www.empresariosagrupados.es/

= E1
+ TMA-AZ-CS-CBT-0001

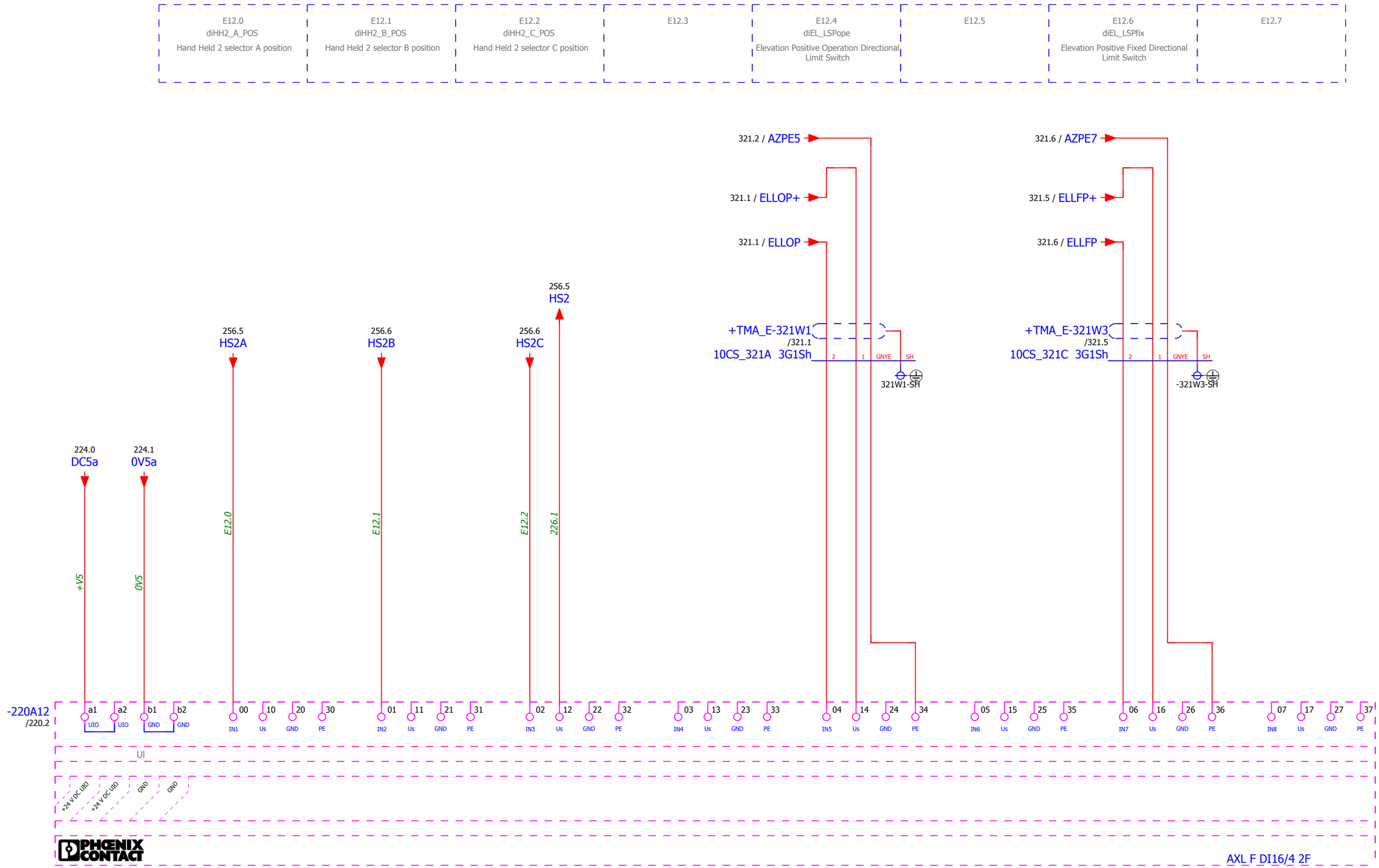

IK4-TEKNIKER
AVDA. OTAOLA 20
20600 Eibar (Gipuzkoa) Spain
Tfno.:(+34) 943 206744
Fax: (+34) 943 202757
Web: www.tekniker.es

Date	15/12/2017						
Reviewed	F.LÓPEZ	2.3	15/12/2017	JOSE MANUEL			
Drew by	JOSE MANUEL	Review	Date	Name	Review	Date	Name

3151_LSST
MCS Design Electrical Schematics
LSST TELESCOPE

Replaces | Replaced by

DISTRIBUTED DIGITAL INPUT MODULE

Customer:
EMPRESARIOS AGRUPADOS
C/Magallanes, 3
28015 MADRID
91 3098000
http://www.empresariosagrupados.es/

= E1
+ TMA-AZ-CS-CBT-0001

E12.8	E12.9	E12.10	E12.11	E12.12	E12.13	E12.14	E12.15
NotUsed DI Channel 09	NotUsed DI Channel 10	NotUsed DI Channel 11	NotUsed DI Channel 12	NotUsed DI Channel 13	NotUsed DI Channel 14	NotUsed DI Channel 15	NotUsed DI Channel 16

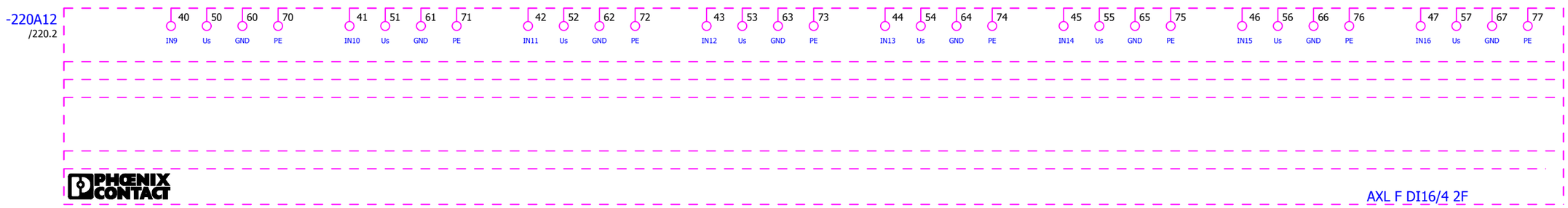

IK4 TEKNIKER Research Alliance
IK4-TEKNIKER
AVDA. OTAOLA 20
20600 Eibar (Gipuzkoa) Spain
Tfno.:(+34) 943 206744
Fax: (+34) 943 202757
Web: www.tekniker.es

Date	14/06/2016						
Reviewed	F.LÓPEZ	2.3	15/12/2017	JOSE MANUEL			
Drew by	jcastano	Review	Date	Name	Review	Date	Name

3151_LSST
MCS Design Electrical Schematics
LSST TELESCOPE
Replaces
Replaced by

DISTRIBUTED DIGITAL INPUT MODULE

Customer:
EMPRESARIOS AGRUPADOS
C/Magallanes, 3
28015 MADRID
91 3098000
http://www.empresariosagrupados.es/

= E1
+ TMA-AZ-CS-CBT-0001

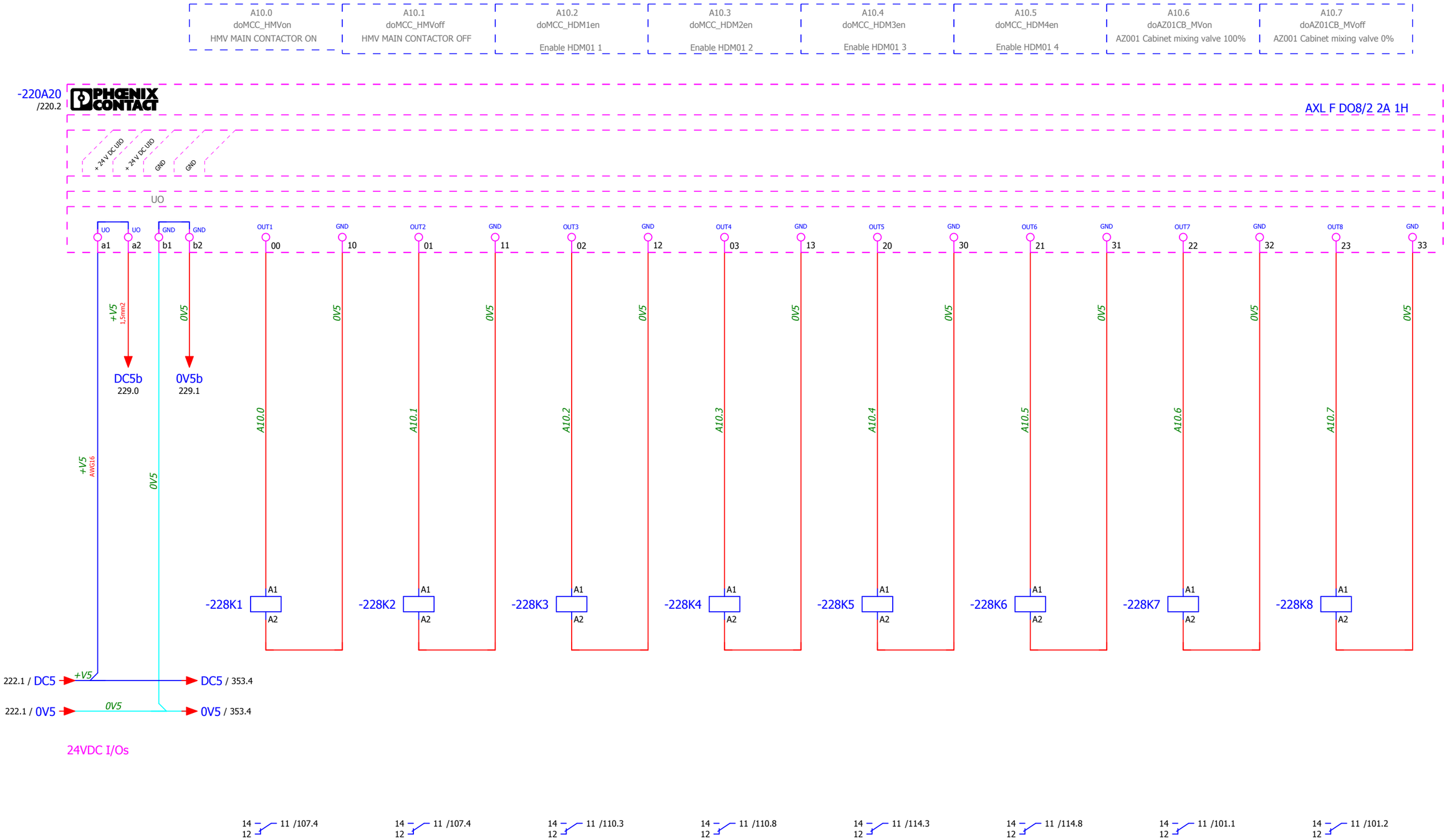

IK4 TEKNIKER Research Alliance	IK4-TEKNIKER AVDA. OTAOLA 20 20600 Eibar (Gipuzkoa) Spain Tfno.:(+34) 943 206744 Fax: (+34) 943 202757 Web: www.tekniker.es								3151_LSST	MCS Design Electrical Schematics LSST TELESCOPE	DISTRIBUTED DIGITAL OUTPUT MODULE
		Date	15/12/2017								
		Reviewed	F.LÓPEZ	2.3	15/12/2017	JOSE MANUEL					
		Drew by	JOSE MANUEL	Review	Date	Name	Review	Date	Name	Replaces	Replaced by

Customer: EMPRESARIOS AGRUPADOS
C/Magallanes, 3
28015 MADRID
91 3098000
http://www.empresariosagrupados.es/

= E1
+ TMA-AZ-CS-CBT-0001

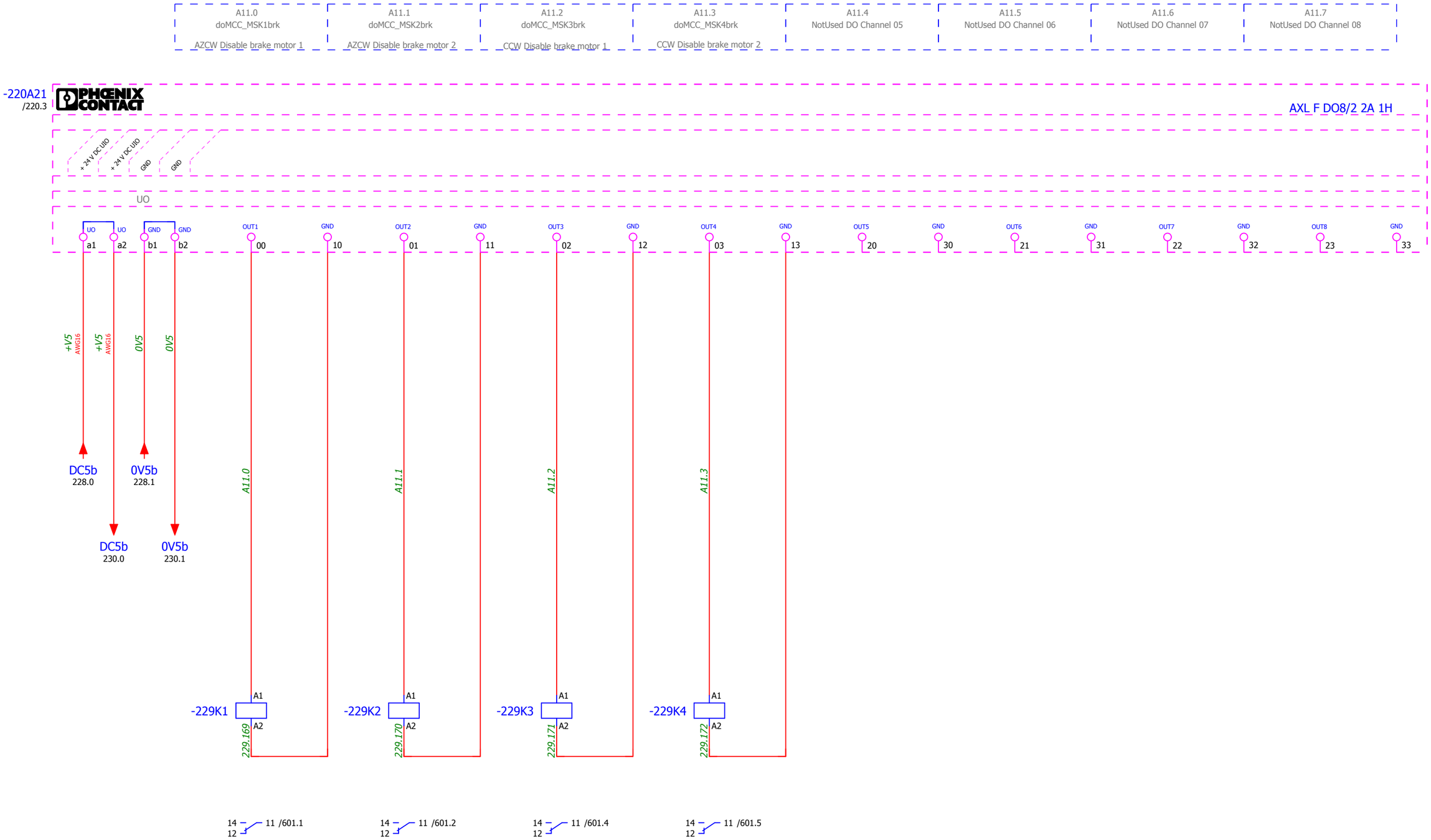

◁ 228

230 ▷

IK4-TEKNIKER
AVDA. OTAOLA 20
20600 Eibar (Gipuzkoa) Spain
Tfno.:(+34) 943 206744
Fax: (+34) 943 202757
Web: www.tekniker.es

Date	13/12/2017						
Reviewed	F.LÓPEZ	2.3	15/12/2017	JOSE MANUEL			
Drew by	JOSE MANUEL	Review	Date	Name	Review	Date	Name

3151_LSST

MCS Design Electrical Schematics

LSST TELESCOPE

Replaces | Replaced by

DISTRIBUTED DIGITAL OUTPUT MODULE

Customer: EMPRESARIOS AGRUPADOS
C/Magallanes, 3
28015 MADRID
91 3098000
http://www.empresariosagrupados.es/

= E1

+ TMA-AZ-CS-CBT-0001

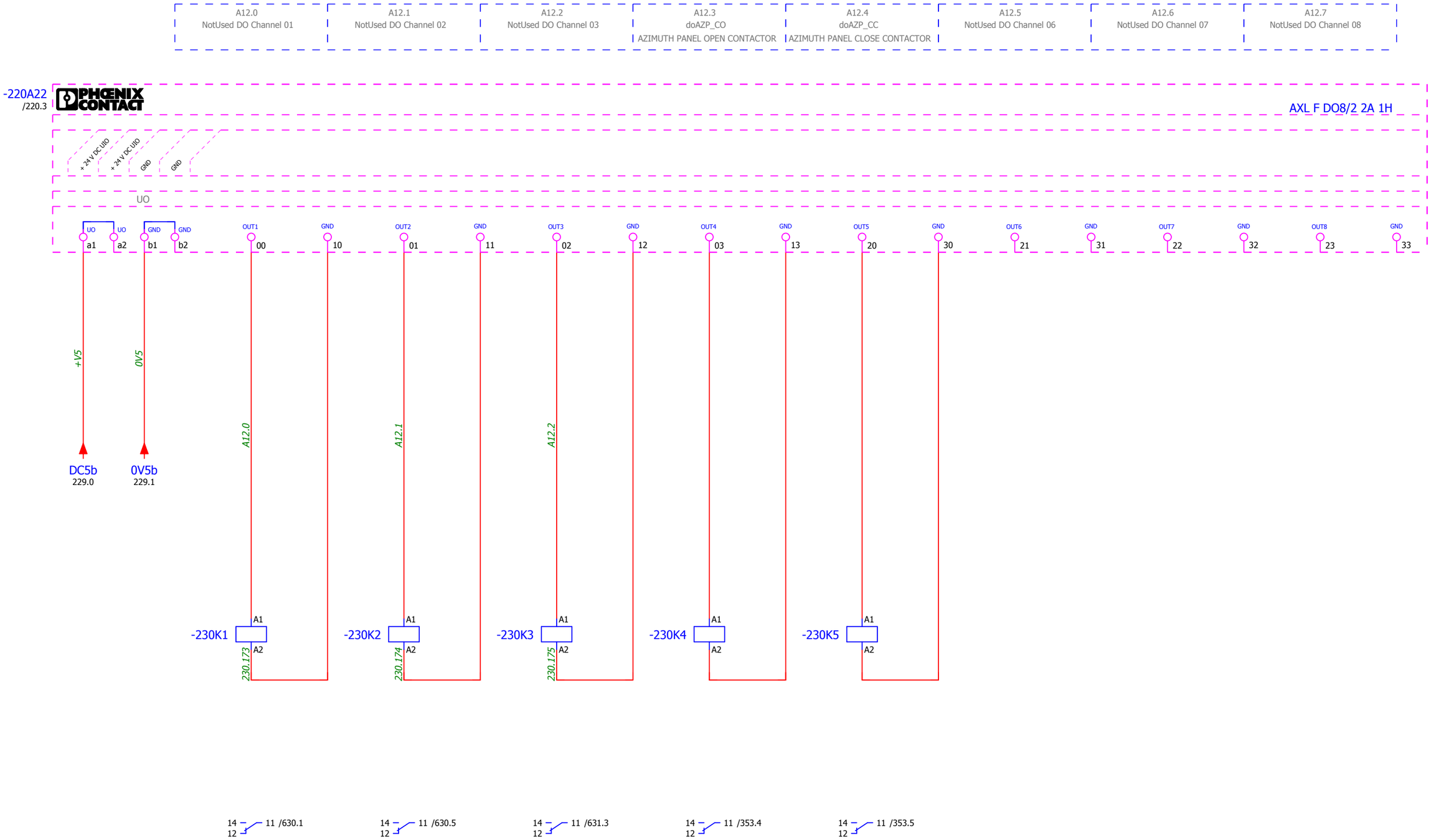

IK4-TEKNIKER
AVDA. OTAOLA 20
20600 Eibar (Gipuzkoa) Spain
Tfno.:(+34) 943 206744
Fax: (+34) 943 202757
Web: www.tekniker.es

Date	15/12/2017						
Reviewed	F.LÓPEZ	2.3	15/12/2017	JOSE MANUEL			
Drew by	JOSE MANUEL	Review	Date	Name	Review	Date	Name

3151_LSST

MCS Design Electrical Schematics

LSST TELESCOPE

Replaces | Replaced by

DISTRIBUTED DIGITAL OUTPUT MODULE

Customer: EMPRESARIOS AGRUPADOS
C/Magallanes, 3
28015 MADRID
91 3098000
http://www.empresariosagrupados.es/

= E1
+ TMA-AZ-CS-CBT-0001

Page 230
Total number 710

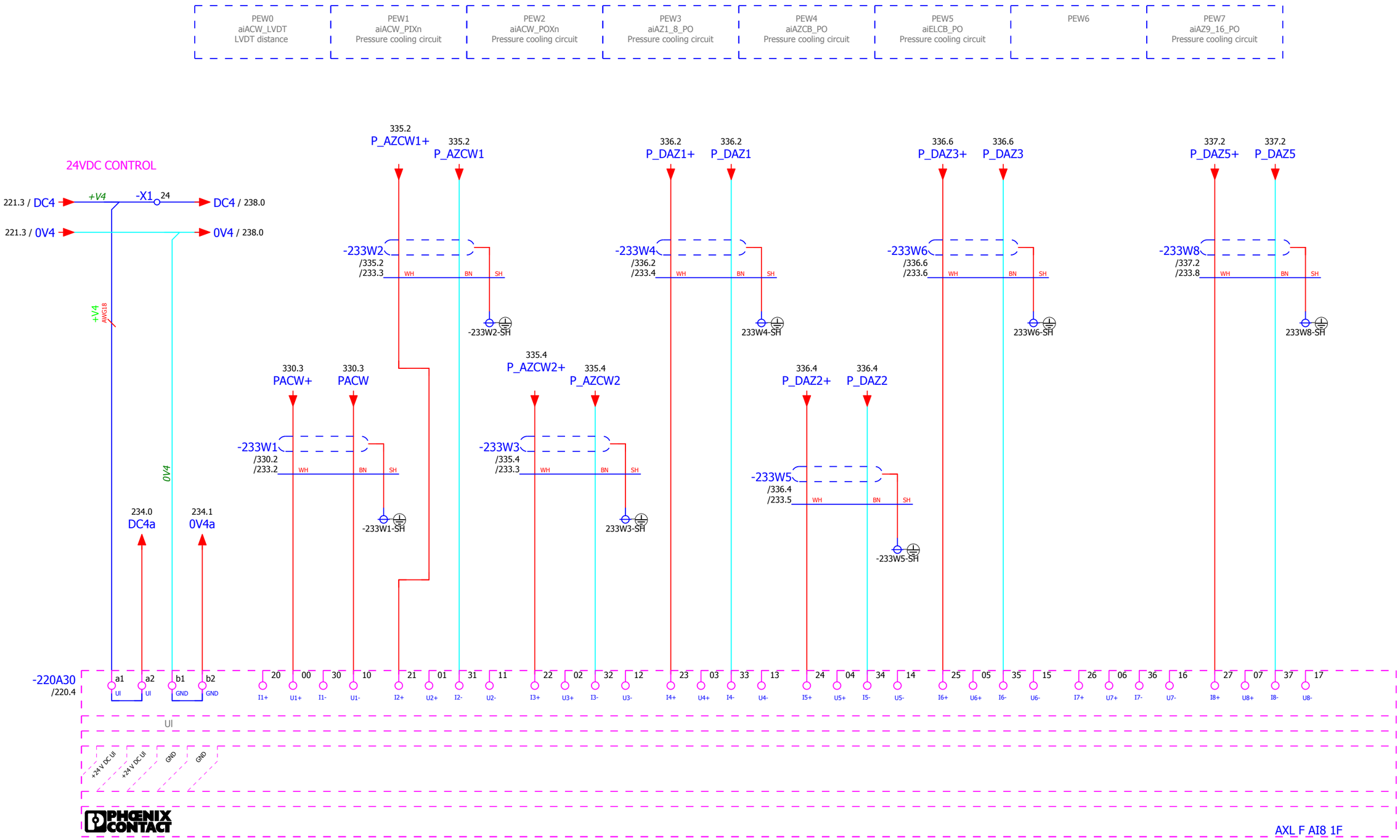

IK4 TEKNIKER Research Alliance

IK4-TEKNIKER
AVDA. OTAOLA 20
20600 Eibar (Gipuzkoa) Spain
Tfno.:(+34) 943 206744
Fax: (+34) 943 202757
Web: www.tekniker.es

Date	14/12/2017						
Reviewed	F.LÓPEZ	2.3	15/12/2017	JOSE MANUEL			
Drew by	JOSE MANUEL	Review	Date	Name	Review	Date	Name

3151_LSST

MCS Design Electrical Schematics

LSST TELESCOPE

Replaces | Replaced by

DISTRIBUTED ANALOG INPUT MODULE

Customer: EMPRESARIOS AGRUPADOS
C/Magallanes, 3
28015 MADRID
91 3098000
http://www.empresariosagrupados.es/

= E1

+ TMA-AZ-CS-CBT-0001

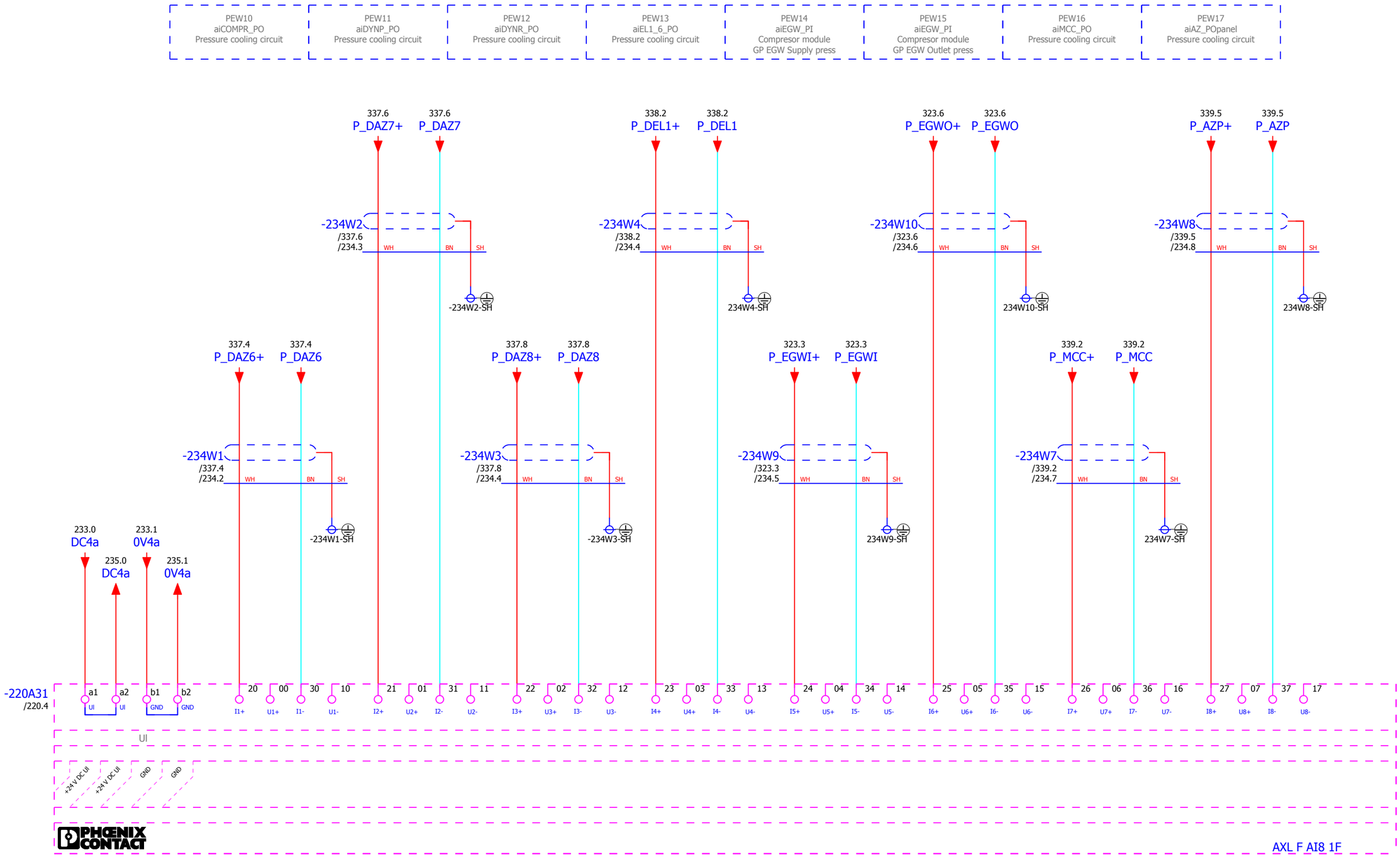

IK4 TEKNIKER Research Alliance

IK4-TEKNIKER
AVDA. OTAOLA 20
20600 Eibar (Gipuzkoa) Spain
Tfno.:(+34) 943 206744
Fax: (+34) 943 202757
Web: www.tekniker.es

Date	15/12/2017						
Reviewed	F.LÓPEZ	2.3	15/12/2017	JOSE MANUEL			
Drew by	JOSE MANUEL	Review	Date	Name	Review	Date	Name

3151_LSST

MCS Design Electrical Schematics

LSST TELESCOPE

Replaces | Replaced by

DISTRIBUTED ANALOG INPUT MODULE

Customer: EMPRESARIOS AGRUPADOS

C/Magallanes, 3
28015 MADRID
91 3098000

http://www.empresariosagrupados.es/

= E1

+ TMA-AZ-CS-CBT-0001

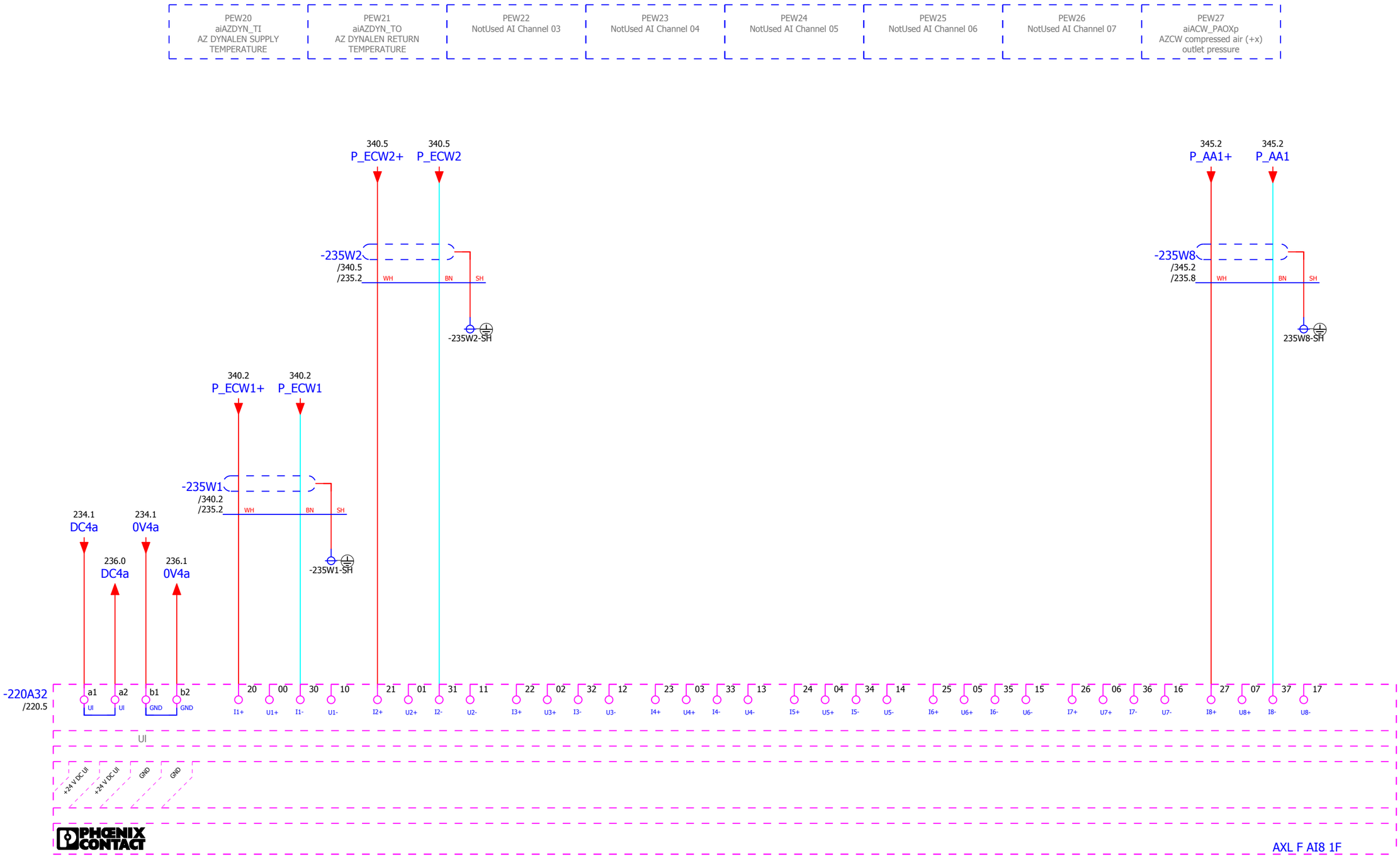

◁ 234

236 ▷

IK4 TEKNIKER Research Alliance
IK4-TEKNIKER
AVDA. OTAOLA 20
20600 Eibar (Gipuzkoa) Spain
Tfno.:(+34) 943 206744
Fax: (+34) 943 202757
Web: www.tekniker.es

Date	11/12/2017						
Reviewed	F.LÓPEZ	2.3	15/12/2017	JOSE MANUEL			
Drew by	JOSE MANUEL	Review	Date	Name	Review	Date	Name

3151_LSST
MCS Design Electrical Schematics
LSST TELESCOPE

Replaces | Replaced by

DISTRIBUTED ANALOG INPUT MODULE

Customer: EMPRESARIOS AGRUPADOS
C/Magallanes, 3
28015 MADRID
91 3098000
http://www.empresariosagrupados.es/

= E1
+ TMA-AZ-CS-CBT-0001

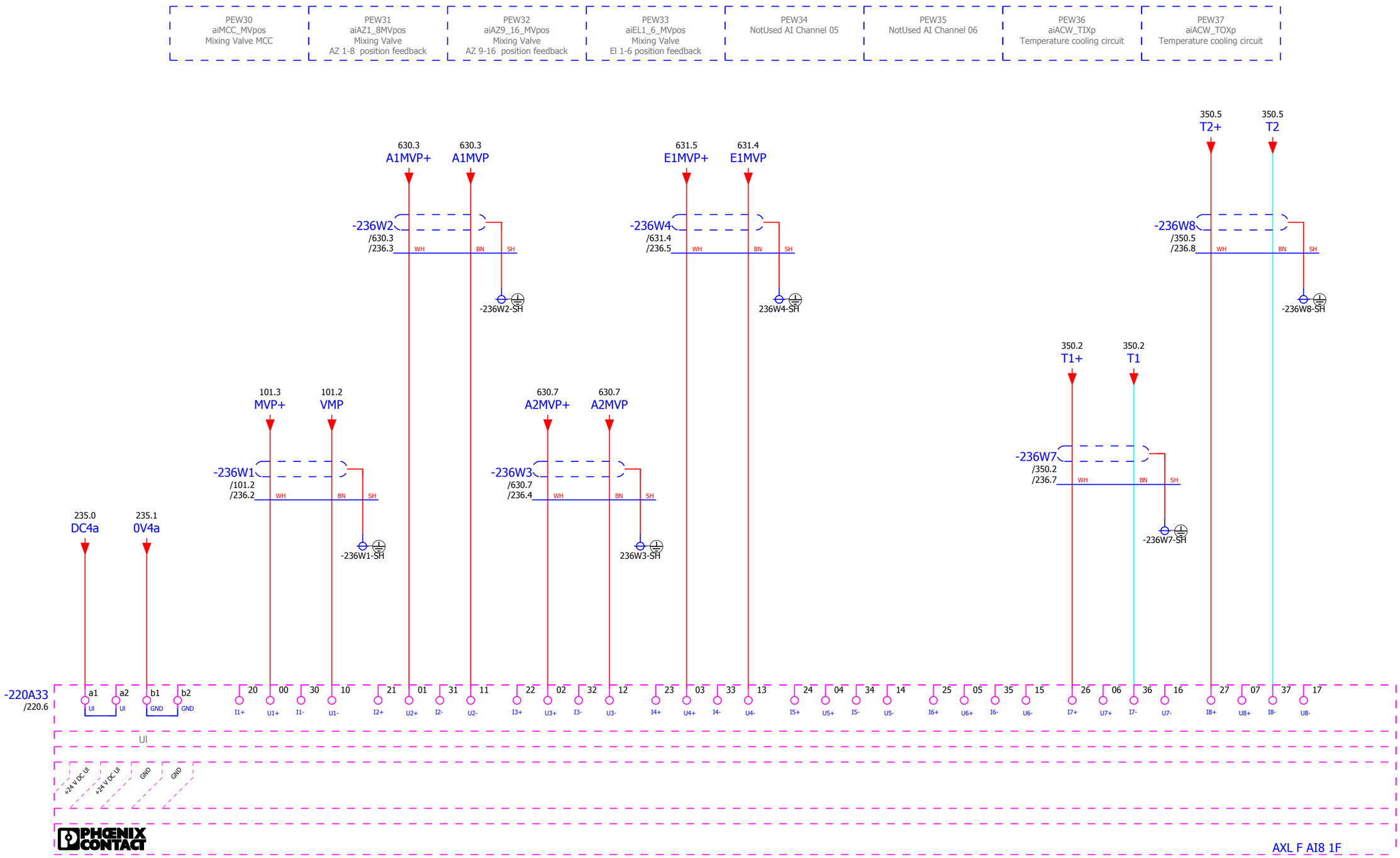

IK4 TEKNIKER Research Alliance

IK4-TEKNIKER
AVDA. OTAOLA 20
20600 Eibar (Gipuzkoa) Spain
Tfno.:(+34) 943 206744
Fax: (+34) 943 202757
Web: www.tekniker.es

Date	13/12/2017						
Reviewed	F.LÓPEZ	2.3	15/12/2017	JOSE MANUEL			
Drew by	JOSE MANUEL	Review	Date	Name	Review	Date	Name

3151_LSST

MCS Design Electrical Schematics

LSST TELESCOPE

Replaces | Replaced by

DISTRIBUTED ANALOG INPUT MODULE

Customer: EMPRESARIOS AGRUPADOS
C/Magallanes, 3
28015 MADRID
91 3098000
http://www.empresariosagrupados.es/

= E1

+ TMA-AZ-CS-CBT-0001

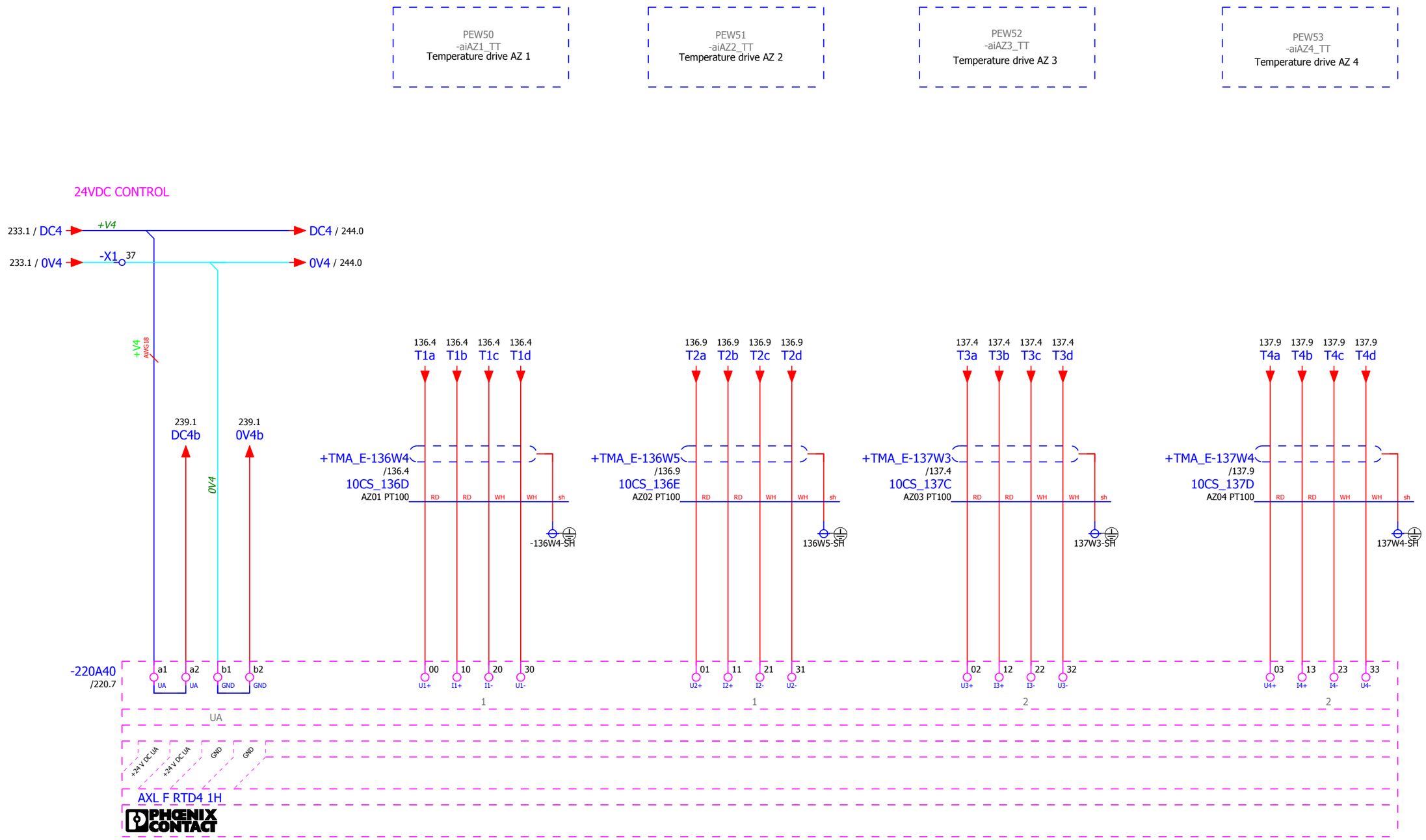

IK4 TEKNIKER Research Alliance
IK4-TEKNIKER
AVDA. OTAOLA 20
20600 Eibar (Gipuzkoa) Spain
Tfno.:(+34) 943 206744
Fax: (+34) 943 202757
Web: www.tekniker.es

Date	15/12/2017						
Reviewed	F.LÓPEZ	2.3	15/12/2017	JOSE MANUEL			
Drew by	JOSE MANUEL	Review	Date	Name	Review	Date	Name

3151_LSST
MCS Design Electrical Schematics
LSST TELESCOPE

Replaces | Replaced by

DISTRIBUTED TEMPERATURE INPUT MODULE

Customer:
EMPRESARIOS AGRUPADOS
C/Magallanes, 3
28015 MADRID
91 3098000
http://www.empresariosagrupados.es/

= E1
+ TMA-AZ-CS-CBT-0001

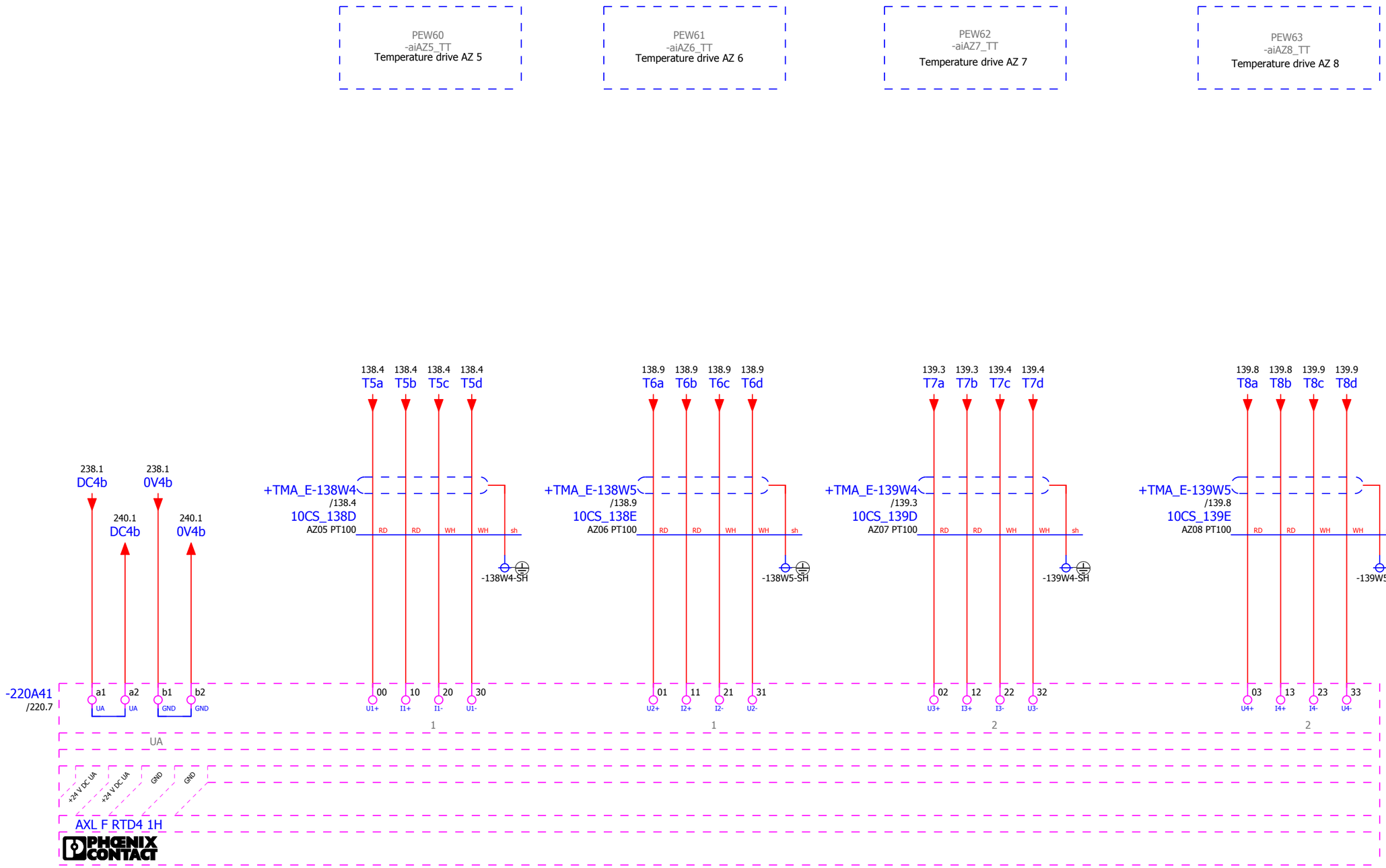

IK4 TEKNIKER Research Alliance

IK4-TEKNIKER
AVDA. OTAOLA 20
20600 Eibar (Gipuzkoa) Spain
Tfno.:(+34) 943 206744
Fax: (+34) 943 202757
Web: www.tekniker.es

Date	15/12/2017						
Reviewed	F.LÓPEZ	2.3	15/12/2017	JOSE MANUEL			
Drew by	JOSE MANUEL	Review	Date	Name	Review	Date	Name

3151_LSST

MCS Design Electrical Schematics

LSST TELESCOPE

Replaces

Replaced by

DISTRIBUTED TEMPERATURE INPUT MODULE

Customer:

EMPRESARIOS AGRUPADOS

C/Magallanes, 3
28015 MADRID
91 3098000

http://www.empresariosagrupados.es/

= E1

+ TMA-AZ-CS-CBT-0001

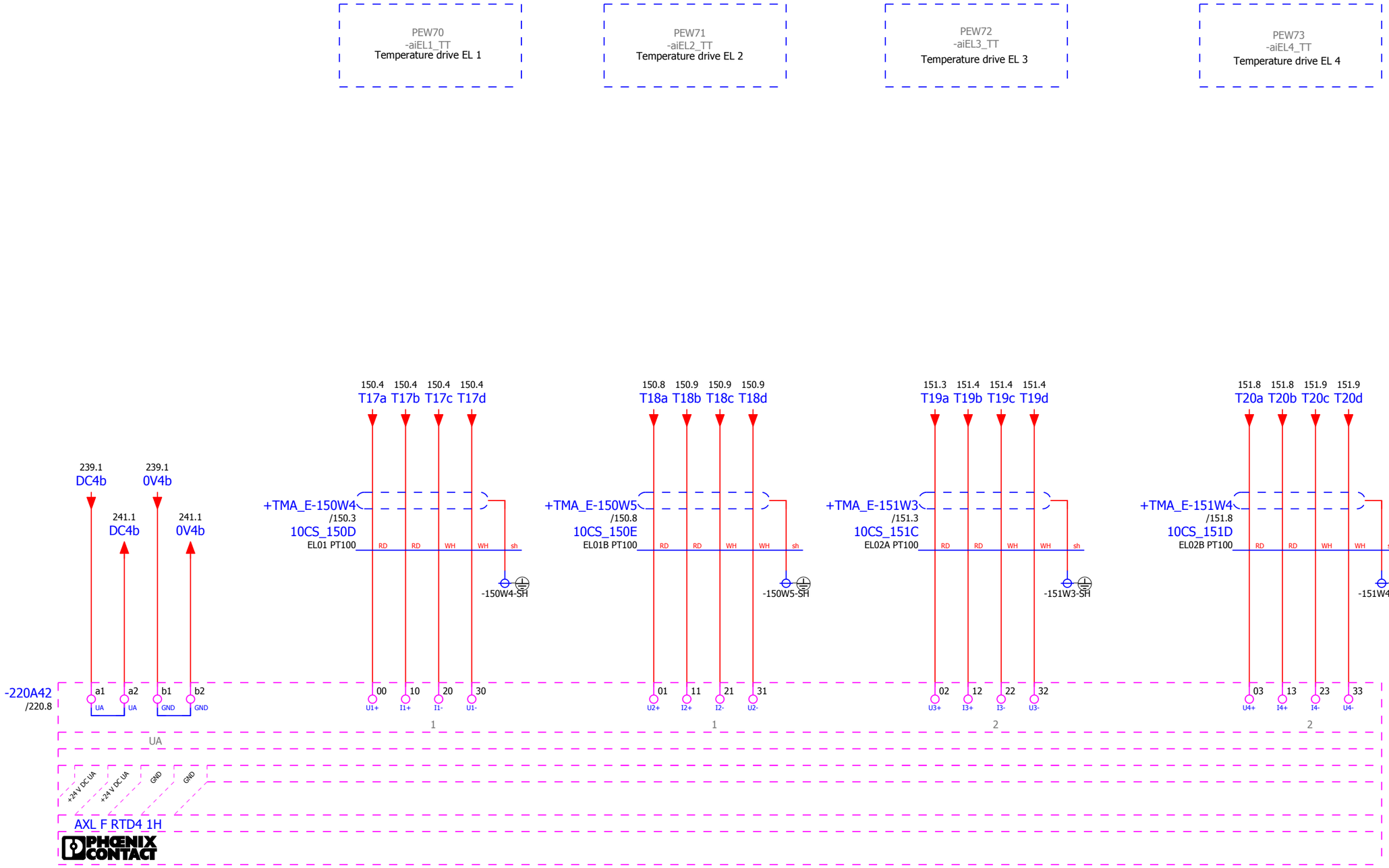

IK4 TEKNIKER Research Alliance
IK4-TEKNIKER
AVDA. OTAOLA 20
20600 Eibar (Gipuzkoa) Spain
Tfno.:(+34) 943 206744
Fax: (+34) 943 202757
Web: www.tekniker.es

Date	15/12/2017						
Reviewed	F.LÓPEZ	2.3	15/12/2017	JOSE MANUEL			
Drew by	JOSE MANUEL	Review	Date	Name	Review	Date	Name

3151_LSST
MCS Design Electrical Schematics
LSST TELESCOPE

Replaces | Replaced by

DISTRIBUTED TEMPERATURE INPUT MODULE

Customer: EMPRESARIOS AGRUPADOS
C/Magallanes, 3
28015 MADRID
91 3098000
http://www.empresariosagrupados.es/

= E1
+ TMA-AZ-CS-CBT-0001

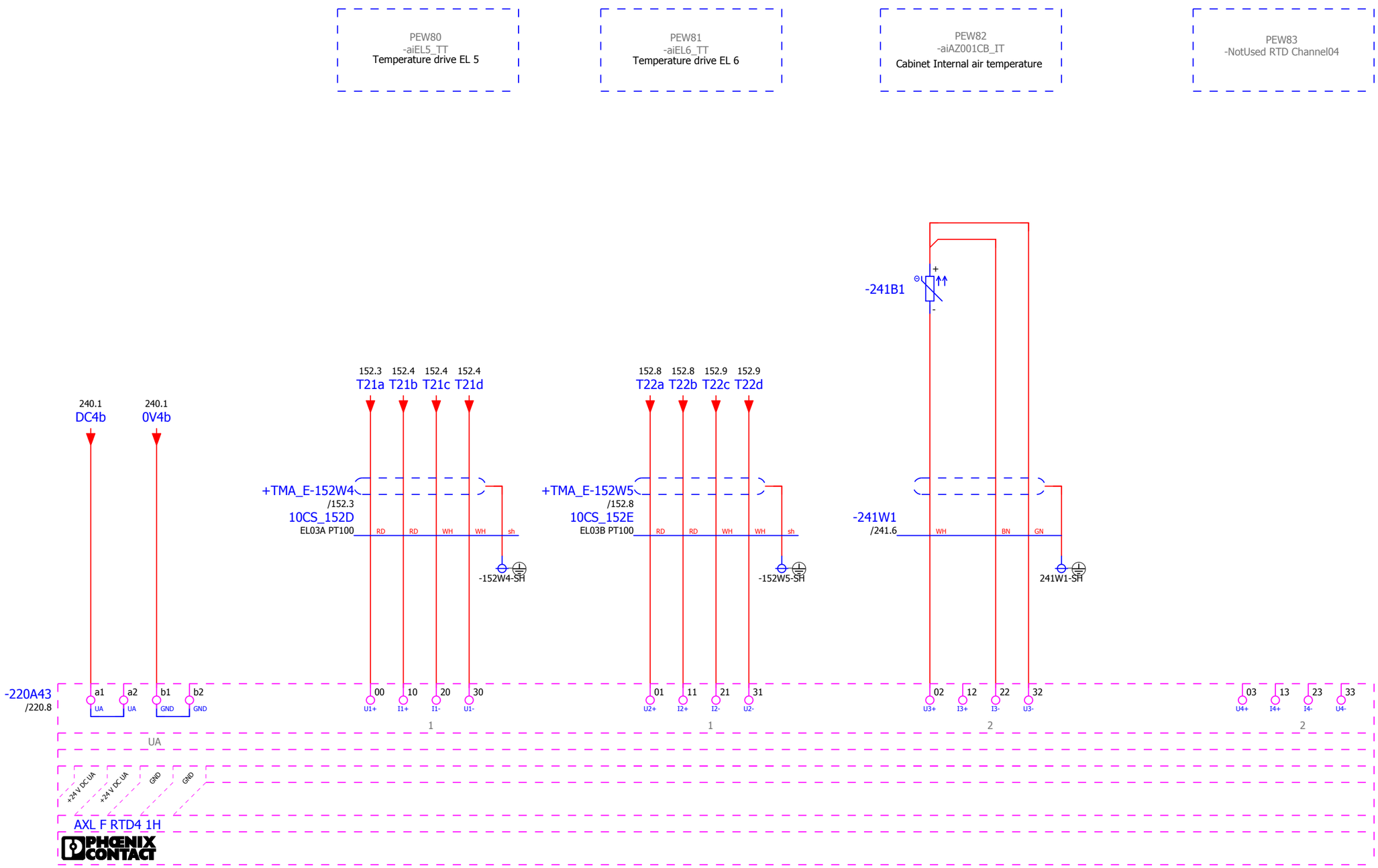

IK4 TEKNIKER Research Alliance

IK4-TEKNIKER
AVDA. OTAOLA 20
20600 Eibar (Gipuzkoa) Spain
Tfno.:(+34) 943 206744
Fax: (+34) 943 202757
Web: www.tekniker.es

Date	15/12/2017						
Reviewed	F.LÓPEZ	2.3	15/12/2017	JOSE MANUEL			
Drew by	JOSE MANUEL	Review	Date	Name	Review	Date	Name

3151_LSST — MCS Design Electrical Schematics

LSST TELESCOPE

Replaces | Replaced by

DISTRIBUTED TEMPERATURE INPUT MODULE

Customer: EMPRESARIOS AGRUPADOS
C/Magallanes, 3
28015 MADRID
91 3098000
http://www.empresariosagrupados.es/

= E1
+ TMA-AZ-CS-CBT-0001

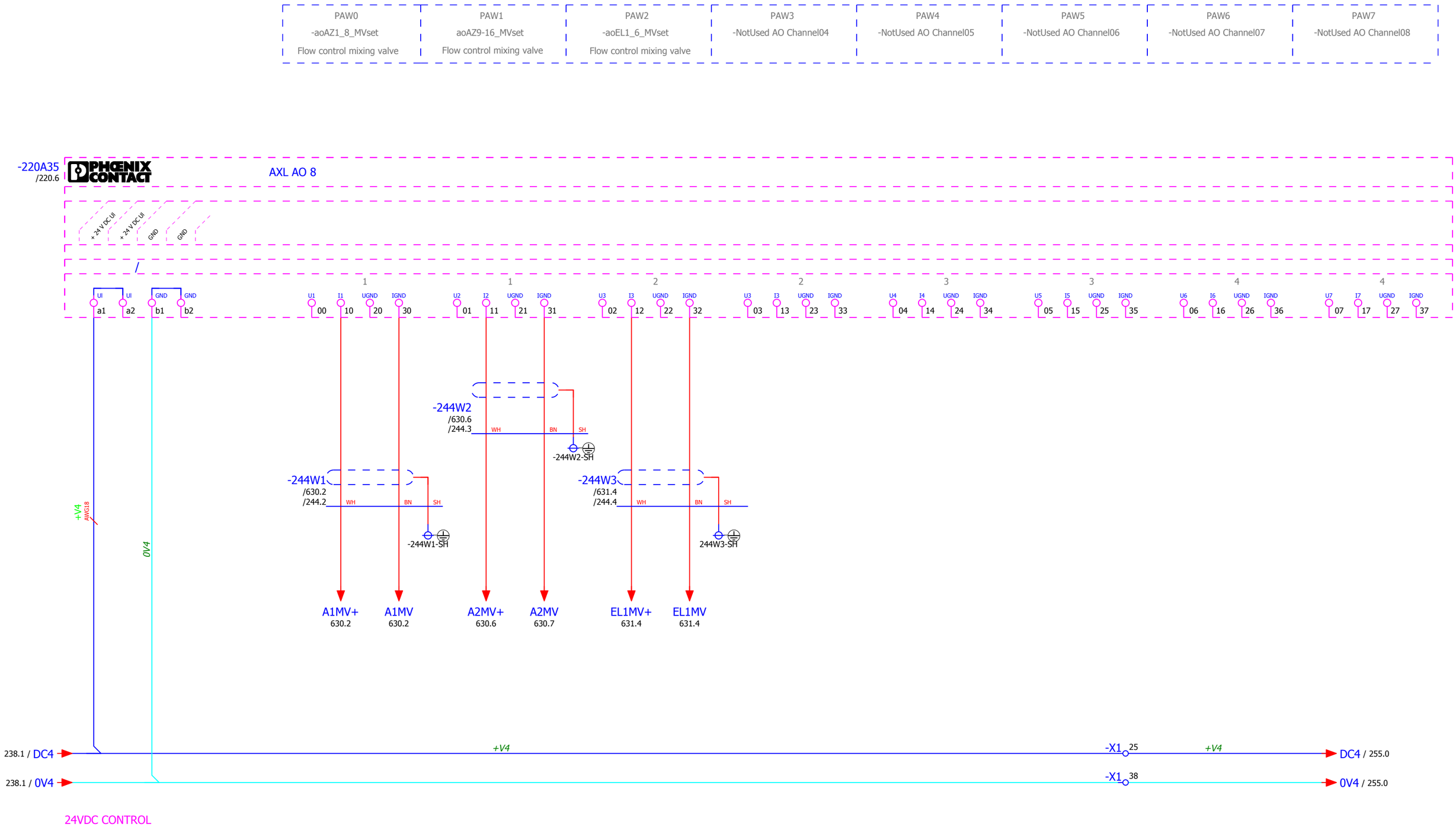

IK4 TEKNIKER Research Alliance	IK4-TEKNIKER AVDA. OTAOLA 20 20600 Eibar (Gipuzkoa) Spain Tfno.:(+34) 943 206744 Fax: (+34) 943 202757 Web: www.tekniker.es									3151_LSST	MCS Design Electrical Schematics LSST TELESCOPE	DISTRIBUTED ANALOG OUTPUT MODULE	Customer: EMPRESARIOS AGRUPADOS C/Magallanes, 3 28015 MADRID 91 3098000 http://www.empresariosagrupados.es/	= E1 + TMA-AZ-CS-CBT-0001
		Date	13/12/2017										
		Reviewed	F.LÓPEZ	2.3	15/12/2017	JOSE MANUEL							
		Drew by	JOSE MANUEL	Review	Date	Name	Review	Date	Name	Replaces	Replaced by		Page 244 Total number 710

+MMCS

Vorne / Front

+MMCS-250A1
/251.0

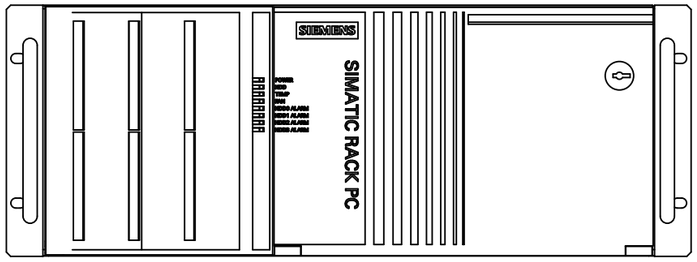

Hinten / Back

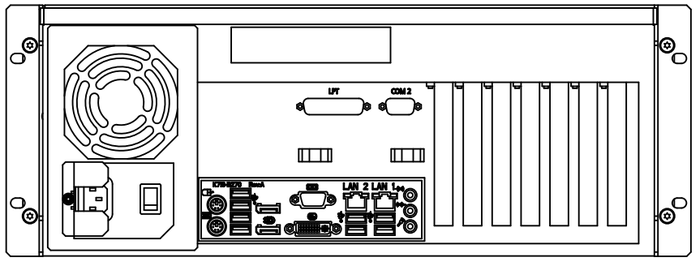

IK4 TEKNIKER Research Alliance
IK4-TEKNIKER
AVDA. OTAOLA 20
20600 Eibar (Gipuzkoa) Spain
Tfno.:(+34) 943 206744
Fax: (+34) 943 202757
Web: www.tekniker.es

Date	10/03/2016						
Reviewed	F.LÓPEZ	2.3	15/12/2017	JOSE MANUEL			
Drew by	jcastano	Review	Date	Name	Review	Date	Name

3151_LSST
MCS Design Electrical Schematics
LSST TELESCOPE

Replaces | Replaced by

PC

Customer: EMPRESARIOS AGRUPADOS
C/Magallanes, 3
28015 MADRID
91 3098000
http://www.empresariosagrupados.es/

= E1
+ TMA-AZ-CS-CBT-0001

+MMCS

+MMCS-250A1
/250.3

POWER:L PE N

-ETH1:1 USB1:1 USB2:1 VGA:1 COM1:1 COM2:1

ETHF
+TMA-PI-CS-CBT-0101/209.3

IK4 TEKNIKER Research Alliance
IK4-TEKNIKER
AVDA. OTAOLA 20
20600 Eibar (Gipuzkoa) Spain
Tfno.:(+34) 943 206744
Fax: (+34) 943 202757
Web: www.tekniker.es

Date	14/12/2017						
Reviewed	F.LÓPEZ	2.3	15/12/2017	JOSE MANUEL			
Drew by	JOSE MANUEL	Review	Date	Name	Review	Date	Name

3151_LSST
MCS Design Electrical Schematics
LSST TELESCOPE

Replaces | Replaced by

PC

Customer: EMPRESARIOS AGRUPADOS
C/Magallanes, 3
28015 MADRID
91 3098000
http://www.empresariosagrupados.es/

= E1
+ TMA-AZ-CS-CBT-0001

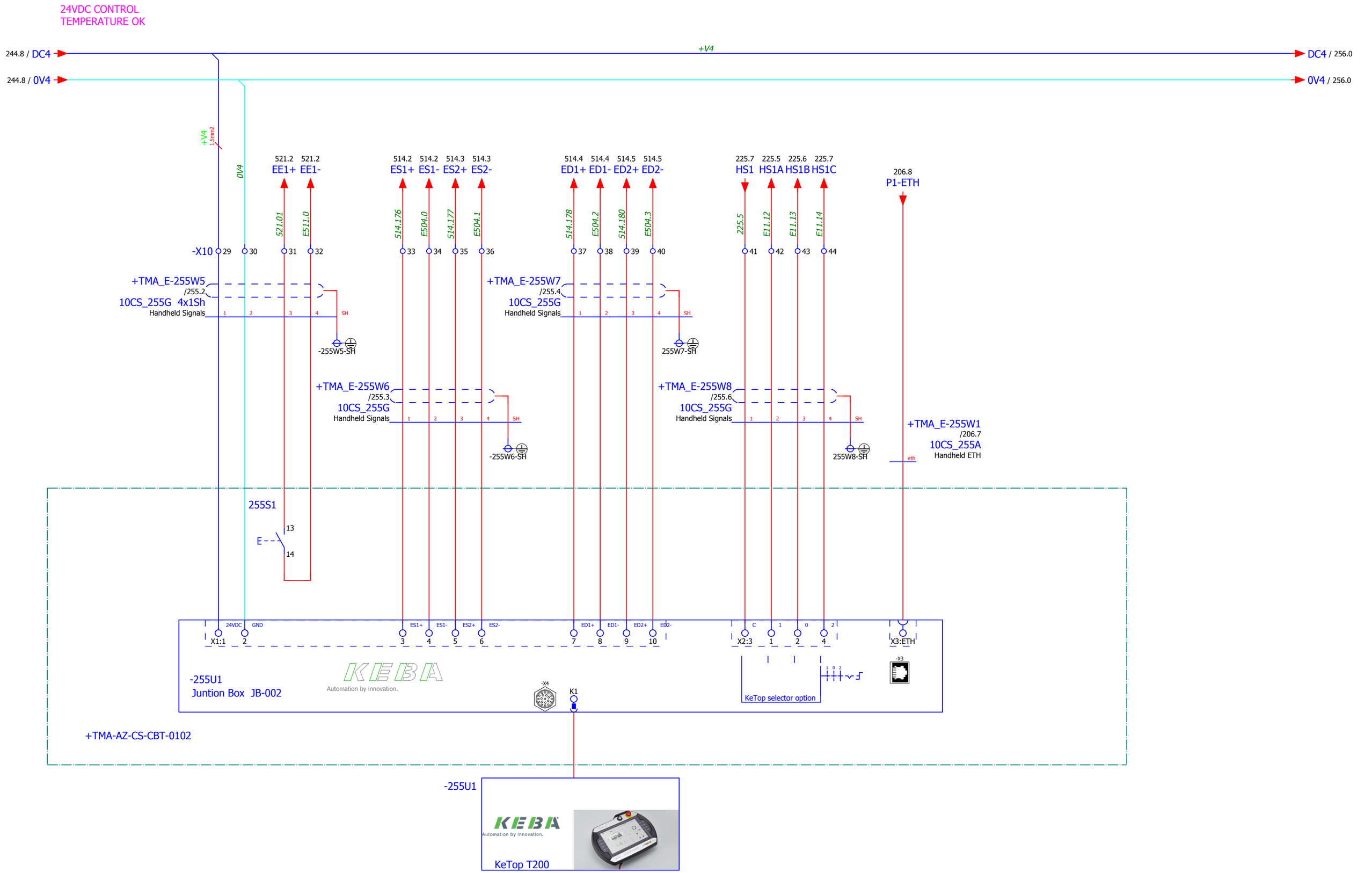

IK4 TEKNIKER Research Alliance
IK4 TEKNIKER
POLO TECNOLOGICO DE EIBAR
C/Iñaki Goenaga nº 5
20600 Eibar (Gipuzkoa) Spain
Tfno.:(+34) 943 206744
Fax: (+34) 943 202757
Web: www.tekniker.es

Date	15/12/2017						
No traducido	J.LOPEZ	2.3	15/12/2017	JOSE MANUEL			
Realizado	JOSE MANUEL	Revisión	Date	Name	Revisión	Date	Name

MCS Design Electrical Schematics
LSST TELESCOPE

Sustituye a: Replaced by

HANDHELD

Cliente: EMPRESARIOS AGRUPADOS
C/Magallanes, 3
28015 MADRID
91 3098000
http://www.empresariosagrupados.es/

= E1
+ TMA-AZ-CS-CBT-0001

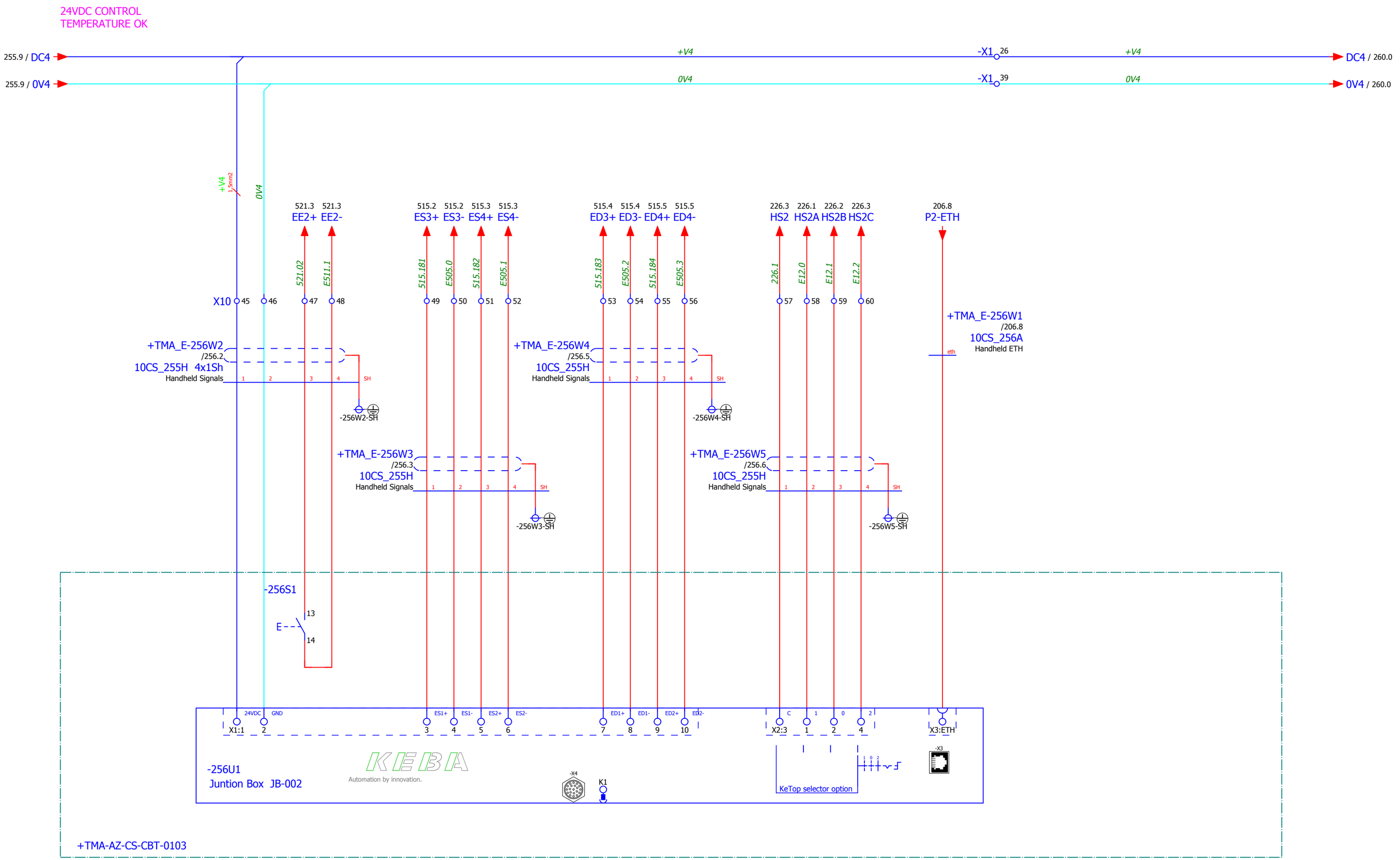

IK4 TEKNIKER
Research Alliance

IK4 TEKNIKER
POLO TECNOLOGICO DE EIBAR
C/Iñaki Goenaga nº 5
20600 Eibar (Gipuzkoa) Spain
Tfno.:(+34) 943 206744
Fax: (+34) 943 202757
Web: www.tekniker.es

Date	15/12/2017							
No traducido	JULIO LOPEZ	2.3	15/12/2017	JOSE MANUEL				
Realizado	JOSE MANUEL	Revisión	Date	Name	Revisión	Date	Name	

MCS Design Electrical Schematics
LSST TELESCOPE

Sustituye a: | Replaced by

HANDHELD

Cliente: EMPRESARIOS AGRUPADOS
C/Magallanes, 3
28015 MADRID
91 3098000
http://www.empresariosagrupados.es/

= E1
+ TMA-AZ-CS-CBT-0001

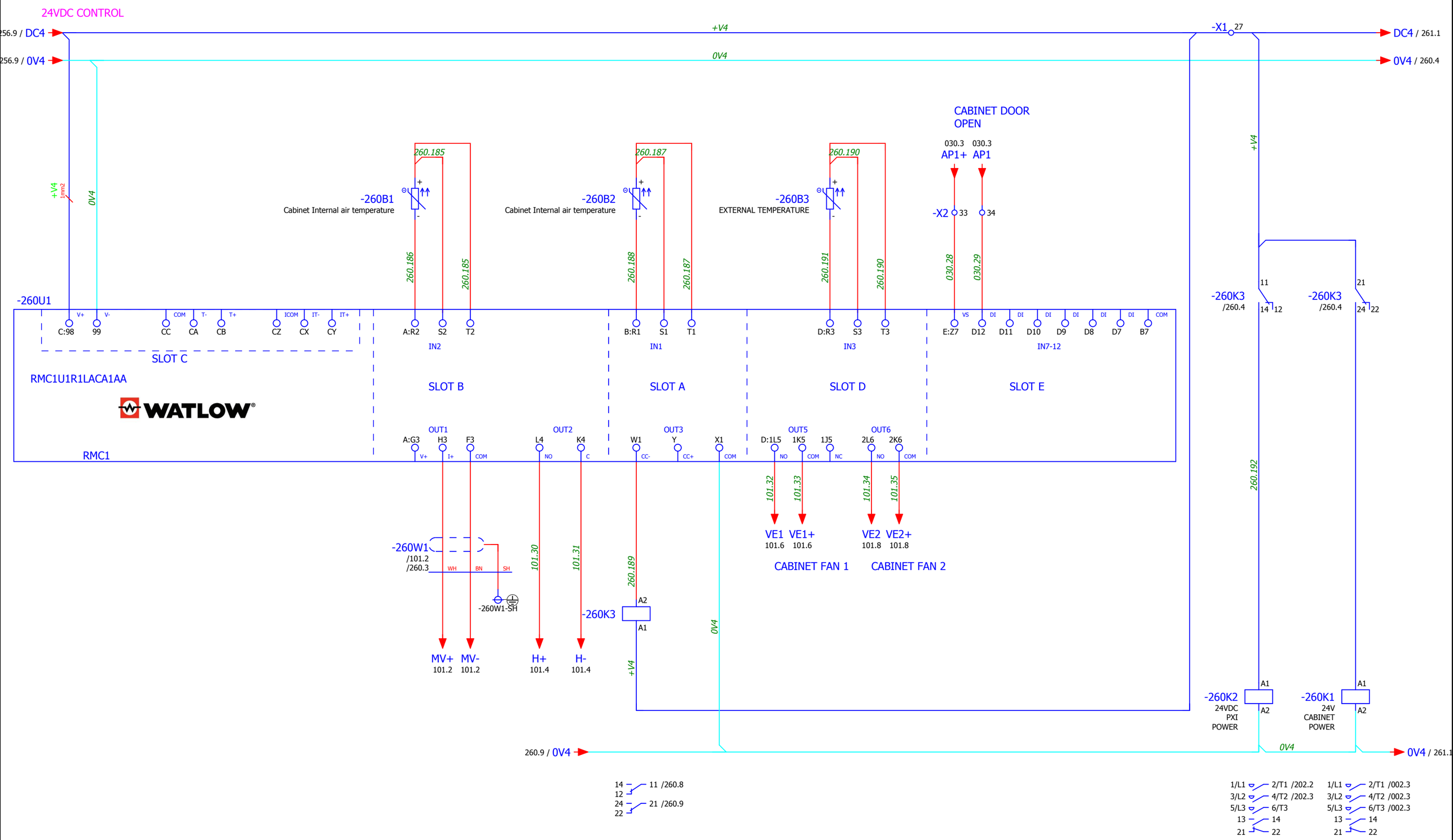

IK4 TEKNIKER Research Alliance

IK4-TEKNIKER
AVDA. OTAOLA 20
20600 Eibar (Gipuzkoa) Spain
Tfno.:(+34) 943 206744
Fax: (+34) 943 202757
Web: www.tekniker.es

Date	15/12/2017						
Reviewed	F.LÓPEZ	2.3	15/12/2017	JOSE MANUEL			
Drew by	JOSE MANUEL	Review	Date	Name	Review	Date	Name

3151_LSST

MCS Design Electrical Schematics

LSST TELESCOPE

Replaces

Replaced by

CABINET TEMPERATURE CONTROL

Customer: EMPRESARIOS AGRUPADOS
C/Magallanes, 3
28015 MADRID
91 3098000
http://www.empresariosagrupados.es/

= E1

+ TMA-AZ-CS-CBT-0001

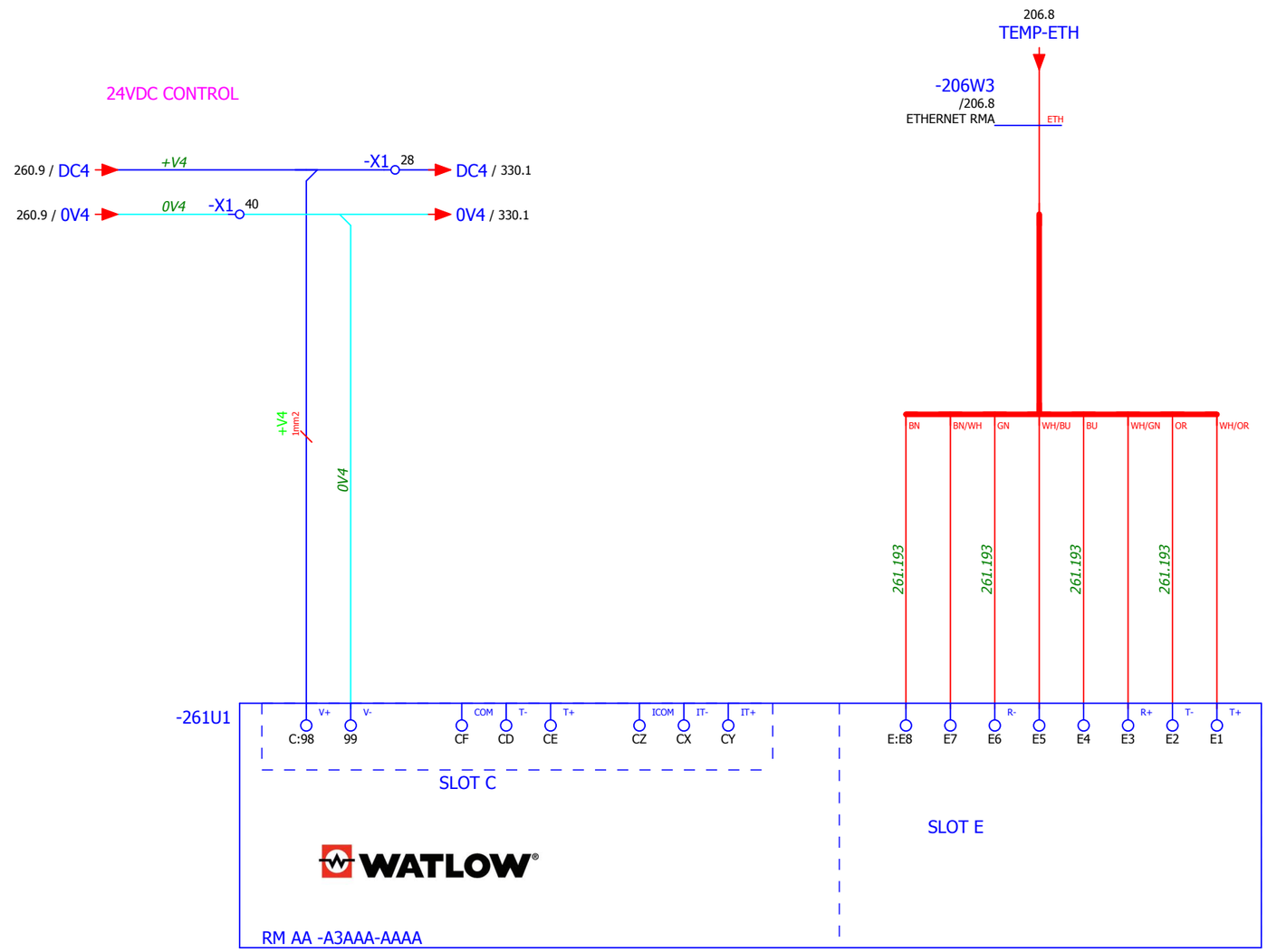

IK4 TEKNIKER Research Alliance

IK4-TEKNIKER
AVDA. OTAOLA 20
20600 Eibar (Gipuzkoa) Spain
Tfno.:(+34) 943 206744
Fax: (+34) 943 202757
Web: www.tekniker.es

Date	14/12/2017						
Reviewed	F.LÓPEZ	2.3	15/12/2017	JOSE MANUEL			
Drew by	JOSE MANUEL	Review	Date	Name	Review	Date	Name

3151_LSST

MCS Design Electrical Schematics

LSST TELESCOPE

Replaces

Replaced by

CABINET TEMPERATURE CONTROL

Customer:

EMPRESARIOS AGRUPADOS

C/Magallanes, 3
28015 MADRID
91 3098000

http://www.empresariosagrupados.es/

= E1

+ TMA-AZ-CS-CBT-0001

-240X1 = EIB AZIMUTH LINEAR ENCODER 1

-240X2 = EIB AZIMUTH LINEAR ENCODER 2

-240X3 = EIB AZIMUTH LINEAR ENCODER 3

-240X4 = EIB AZIMUTH LINEAR ENCODER 4

-240X5 = EIB ELEVATION LINEAR ENCODER 1

-240X6 = EIB ELEVATION LINEAR ENCODER 2

-240X7 = EIB ELEVATION LINEAR ENCODER 3

-240X8 = EIB ELEVATION LINEAR ENCODER 4

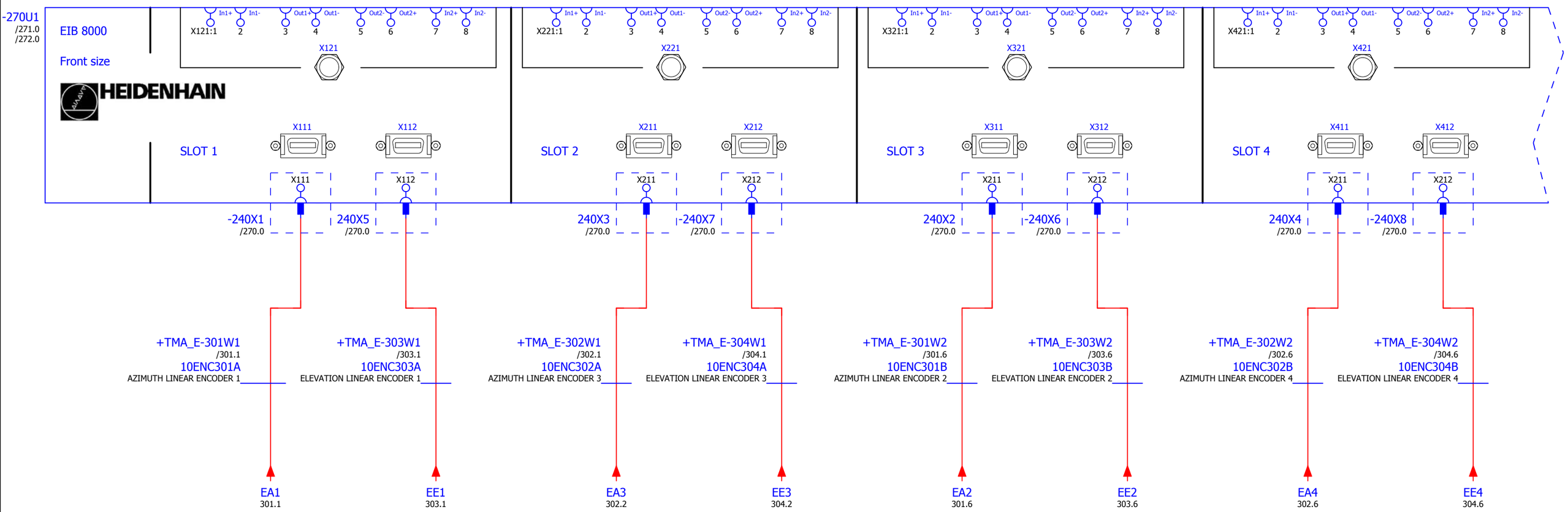

IK4 TEKNIKER Research Alliance

IK4-TEKNIKER
AVDA. OTAOLA 20
20600 Eibar (Gipuzkoa) Spain
Tfno.:(+34) 943 206744
Fax: (+34) 943 202757
Web: www.tekniker.es

Date	15/12/2017						
Reviewed	F.LÓPEZ	2.3	15/12/2017	JOSE MANUEL			
Drew by	JOSE MANUEL	Review	Date	Name	Review	Date	Name

3151_LSST

MCS Design Electrical Schematics

LSST TELESCOPE

Replaces | Replaced by

ENCODER INTERFACE

Customer: EMPRESARIOS AGRUPADOS
C/Magallanes, 3
28015 MADRID
91 3098000
http://www.empresariosagrupados.es/

= E1

+ TMA-AZ-CS-CBT-0001

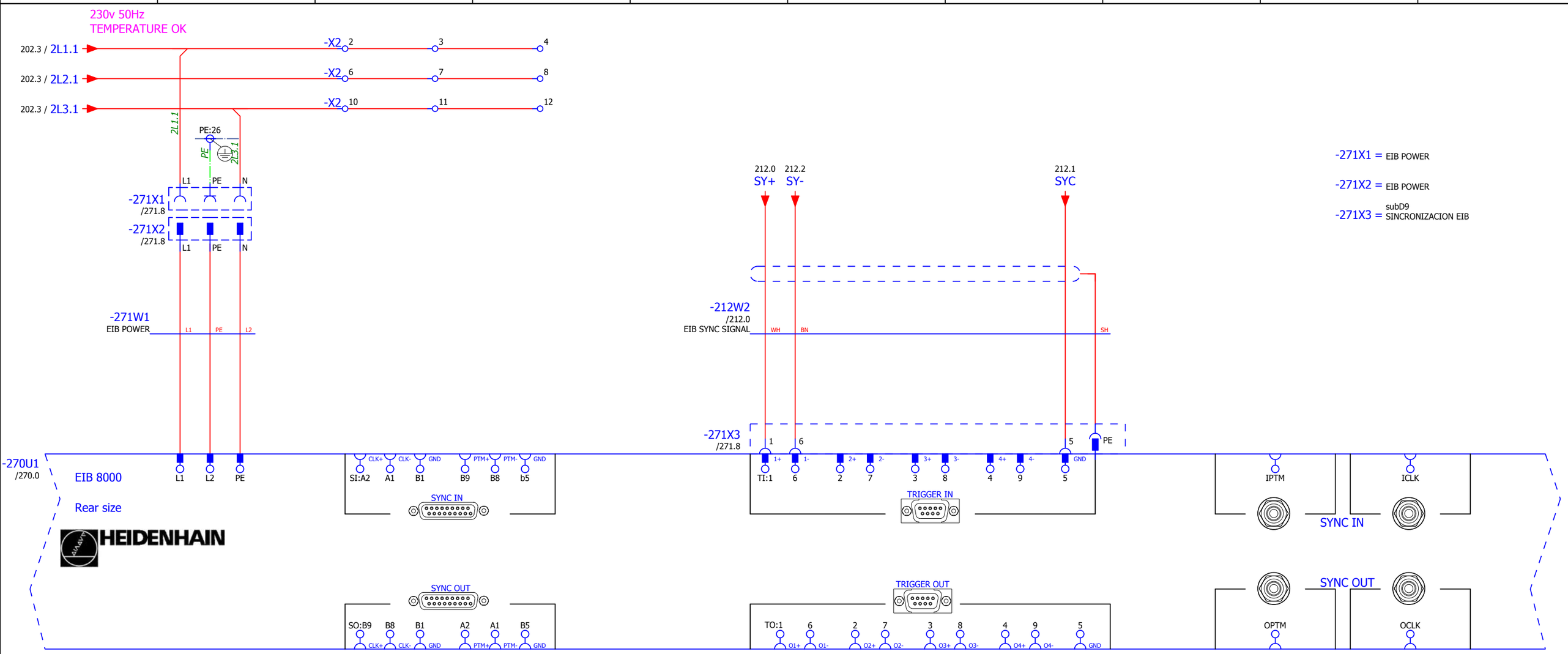

◁ 270

272 ▷

IK4-TEKNIKER
AVDA. OTAOLA 20
20600 Eibar (Gipuzkoa) Spain
Tfno.:(+34) 943 206744
Fax: (+34) 943 202757
Web: www.tekniker.es

Date	15/12/2017						
Reviewed	F.LÓPEZ	2.3	15/12/2017	JOSE MANUEL			
Drew by	JOSE MANUEL	Review	Date	Name	Review	Date	Name

3151_LSST
MCS Design Electrical Schematics
LSST TELESCOPE

Replaces | Replaced by

ENCODER INTERFACE-
SYNCHRONIZATION SIGNALS

Customer: EMPRESARIOS AGRUPADOS
C/Magallanes, 3
28015 MADRID
91 3098000
http://www.empresariosagrupados.es/

= E1
+ TMA-AZ-CS-CBT-0001

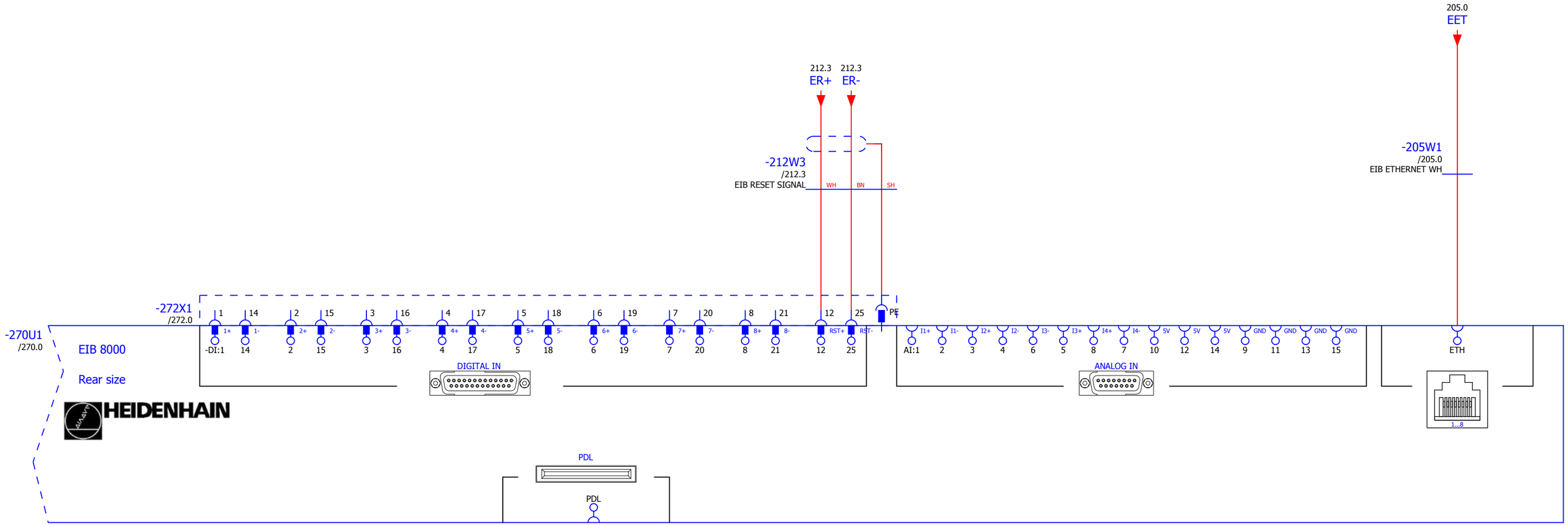

-272X1 = subD25
EIB DIGITAL IN

IK4-TEKNIKER
AVDA. OTAOLA 20
20600 Eibar (Gipuzkoa) Spain
Tfno.:(+34) 943 206744
Fax: (+34) 943 202757
Web: www.tekniker.es

Date	15/12/2017						
Reviewed	F.LÓPEZ	2.3	15/12/2017	JOSE MANUEL			
Drew by	JOSE MANUEL	Review	Date	Name	Review	Date	Name

3151_LSST
MCS Design Electrical Schematics
LSST TELESCOPE

Replaces | Replaced by

ENCODER INTERFACE- AUX. SIGNALS

Customer: EMPRESARIOS AGRUPADOS
C/Magallanes, 3
28015 MADRID
91 3098000
http://www.empresariosagrupados.es/

= E1
+ TMA-AZ-CS-CBT-0001

0	1	2	3	4	5	6	7	8	9

-301X1 = ENCODER AZIMUTH 1

-301X2 = ENCODER AZIMUTH 2

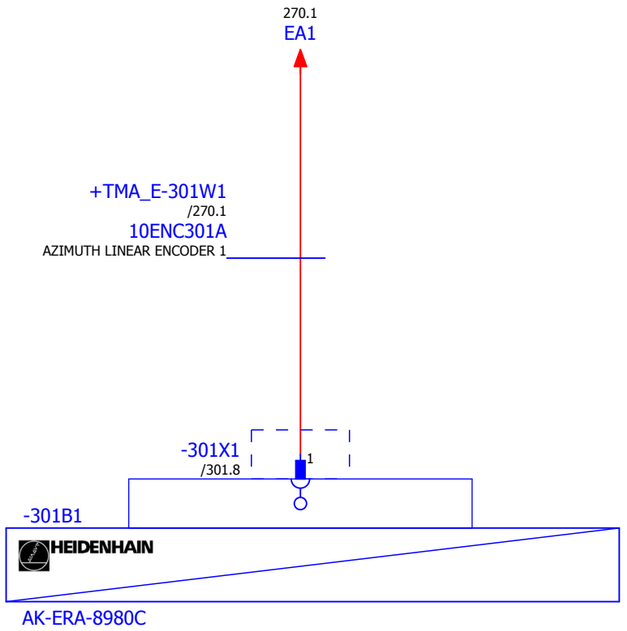

AZIMUTH ENCODER 1

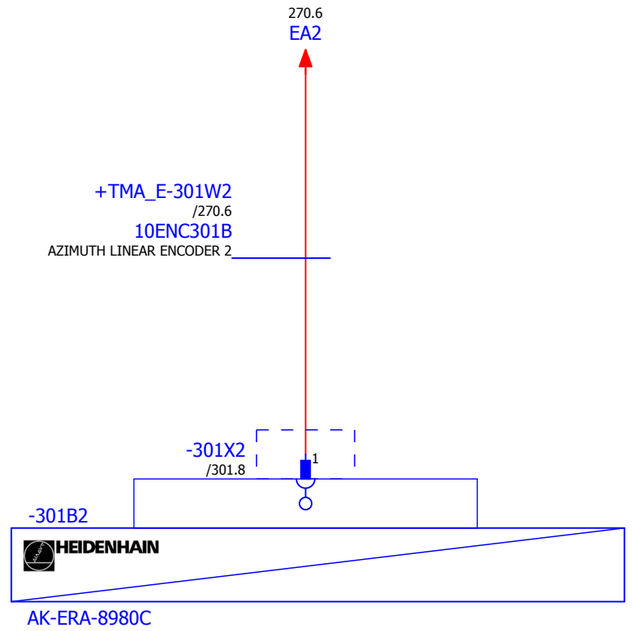

AZIMUTH ENCODER 2

0	1	2	3	4	5	6	7	8	9

-302X1 = ENCODER AZIMUTH 3

-302X2 = ENCODER AZIMUTH 4

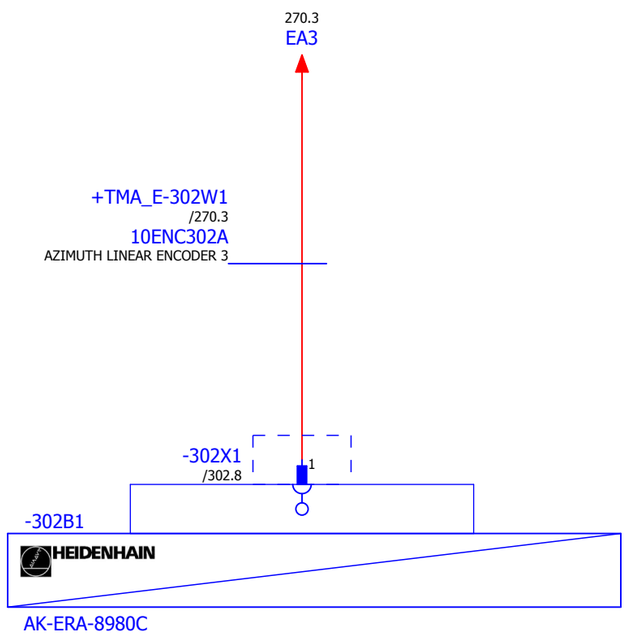

AZIMUTH ENCODER 3

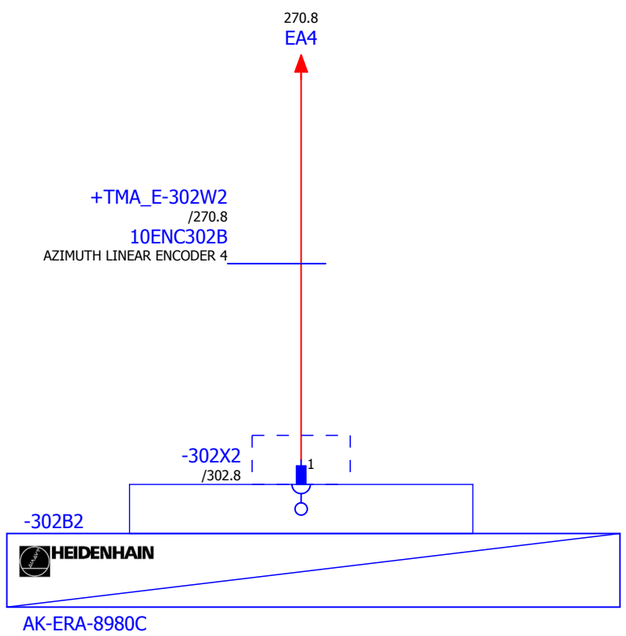

AZIMUTH ENCODER 4

-303X1 = ELEVATION ENCODER 1

-303X2 = ELEVATION ENCODER 2

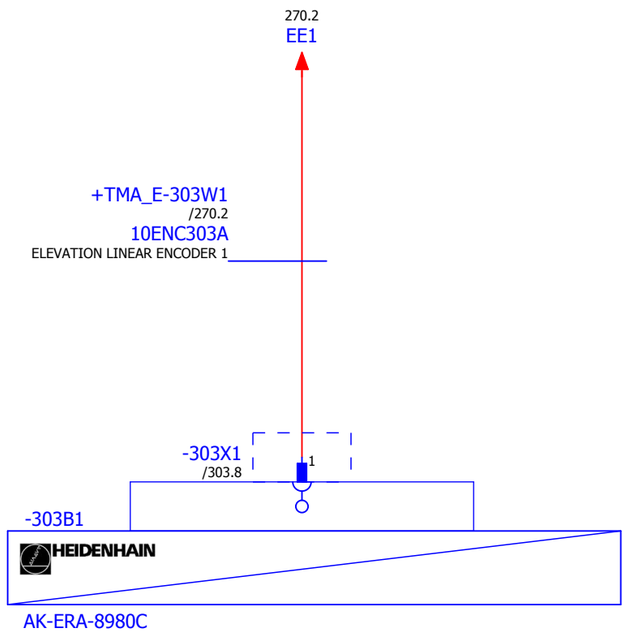

ELEVATION ENCODER 1

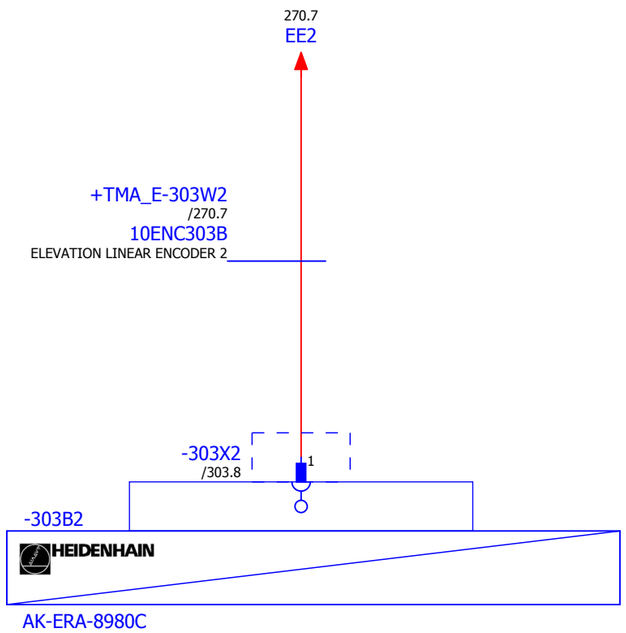

ELEVATION ENCODER 2

IK4 TEKNIKER Research Alliance

IK4-TEKNIKER
AVDA. OTAOLA 20
20600 Eibar (Gipuzkoa) Spain
Tfno.:(+34) 943 206744
Fax: (+34) 943 202757
Web: www.tekniker.es

Date	15/12/2017						
Reviewed	F.LÓPEZ	2.3	15/12/2017	JOSE MANUEL			
Drew by	JOSE MANUEL	Review	Date	Name	Review	Date	Name

3151_LSST

MCS Design Electrical Schematics

LSST TELESCOPE

Replaces | Replaced by

ELEVATION LINEAR ENCODERS

Customer: EMPRESARIOS AGRUPADOS
C/Magallanes, 3
28015 MADRID
91 3098000
http://www.empresariosagrupados.es/

= E1

+ TMA-AZ-CS-CBT-0001

-304X1 = ELEVATION ENCODER 3

-304X2 = ELEVATION ENCODER 4

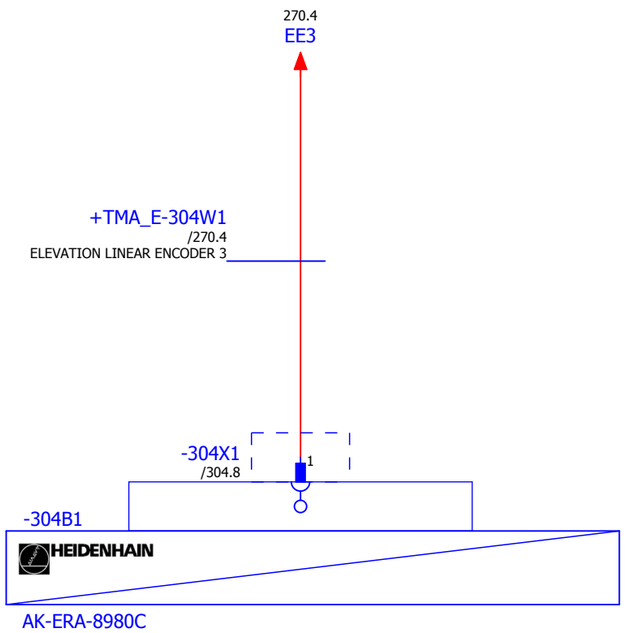

ELEVATION ENCODER 3

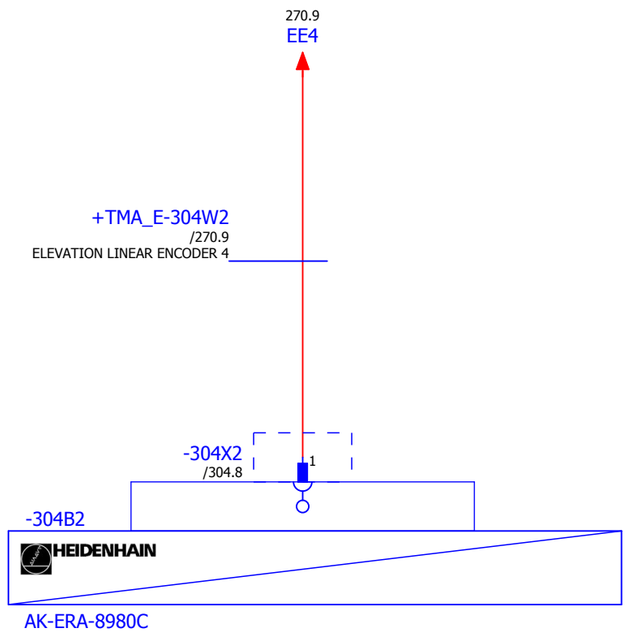

ELEVATION ENCODER 4

IK4 TEKNIKER Research Alliance
IK4-TEKNIKER
AVDA. OTAOLA 20
20600 Eibar (Gipuzkoa) Spain
Tfno.:(+34) 943 206744
Fax: (+34) 943 202757
Web: www.tekniker.es

Date	15/12/2017						
Reviewed	F.LÓPEZ	2.3	15/12/2017	JOSE MANUEL			
Drew by	JOSE MANUEL	Review	Date	Name	Review	Date	Name

3151_LSST
MCS Design Electrical Schematics
LSST TELESCOPE

Replaces | Replaced by

ELEVATION LINEAR ENCODERS

Customer: EMPRESARIOS AGRUPADOS
C/Magallanes, 3
28015 MADRID
91 3098000
http://www.empresariosagrupados.es/

= E1
+ TMA-AZ-CS-CBT-0001

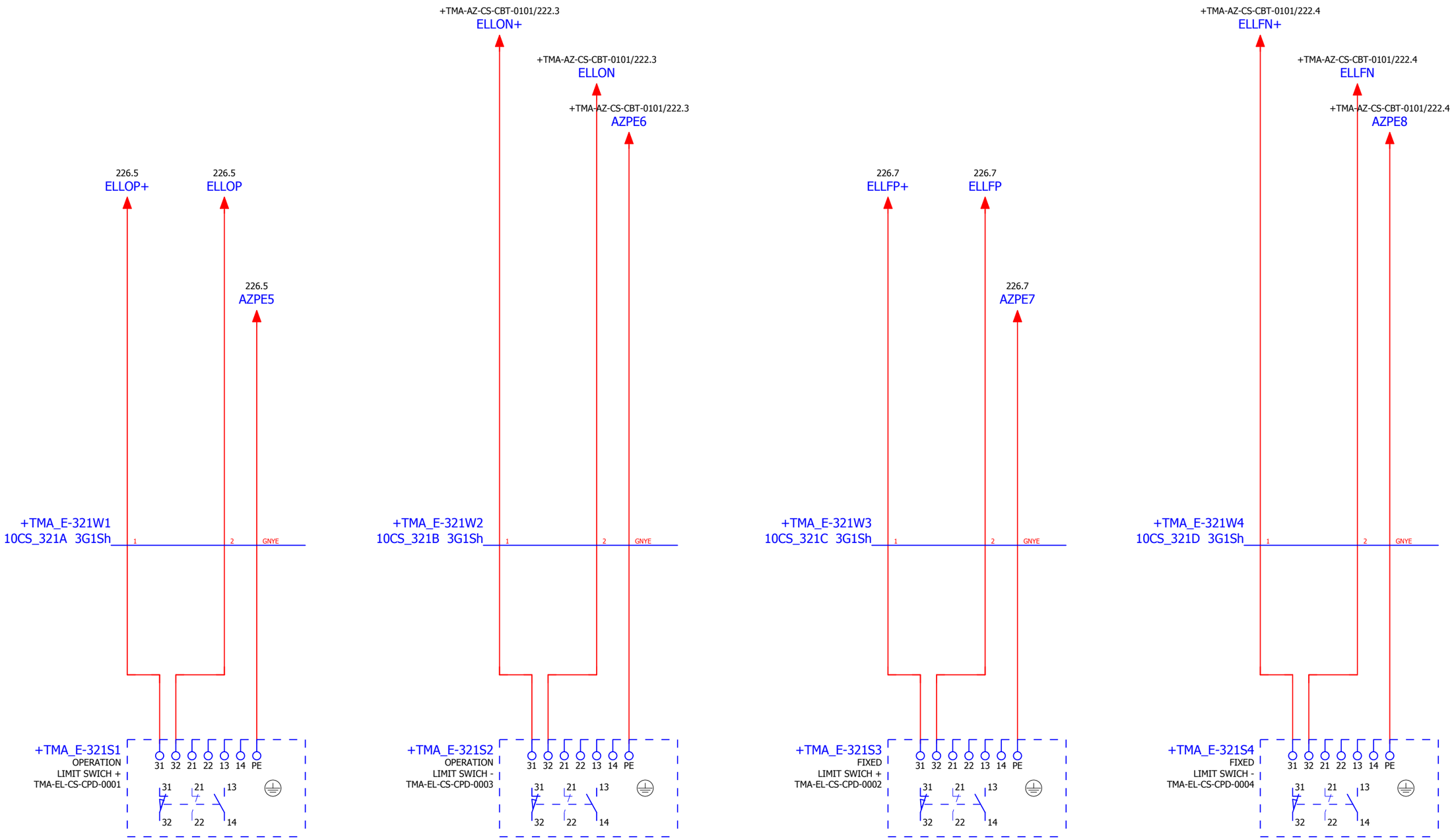

IK4 TEKNIKER Research Alliance
IK4-TEKNIKER
AVDA. OTAOLA 20
20600 Eibar (Gipuzkoa) Spain
Tfno.:(+34) 943 206744
Fax: (+34) 943 202757
Web: www.tekniker.es

Date	15/12/2017						
Reviewed	F.LÓPEZ	2.3	15/12/2017	JOSE MANUEL			
Drew by	JOSE MANUEL	Review	Date	Name	Review	Date	Name

3151_LSST
MCS Design Electrical Schematics
LSST TELESCOPE

Replaces | Replaced by

ELEVATION AXIS LIMIT SWICHES

Customer: EMPRESARIOS AGRUPADOS
C/Magallanes, 3
28015 MADRID
91 3098000
http://www.empresariosagrupados.es/

= E1
+ TMA-AZ-CS-CBT-0001

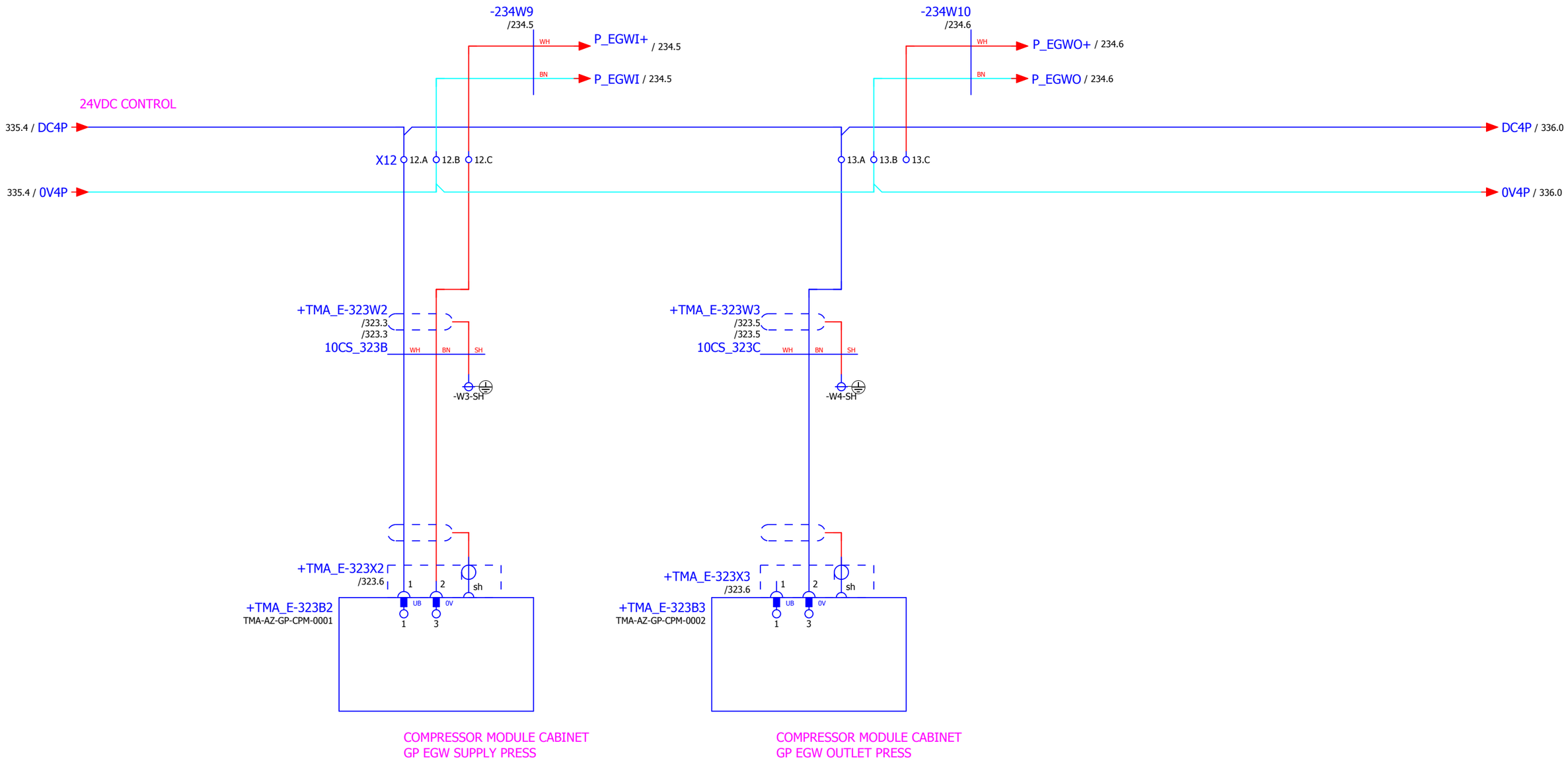

+TMA_E-323X3 = SHIELDED M12 4 PIN
AZ29-30 DRIVERS Cooling Circuit OUT pressure

+TMA_E-323X2 = SHIELDED M12 4 PIN
AZ27-28 DRIVERS Cooling Circuit OUT pressure

IK4 TEKNIKER Research Alliance
IK4-TEKNIKER
AVDA. OTAOLA 20
20600 Eibar (Gipuzkoa) Spain
Tfno.:(+34) 943 206744
Fax: (+34) 943 202757
Web: www.tekniker.es

Date	15/12/2017						
Reviewed	F.LÓPEZ	2.3	15/12/2017	JOSE MANUEL			
Drew by	JOSE MANUEL	Review	Date	Name	Review	Date	Name

3151_LSST
MCS Design Electrical Schematics
LSST TELESCOPE
Replaces
Replaced by

GP EGW PRESSURE

Customer: EMPRESARIOS AGRUPADOS
C/Magallanes, 3
28015 MADRID
91 3098000
http://www.empresariosagrupados.es/

= E1
+ TMA-AZ-CS-CBT-0001

24VDC CONTROL

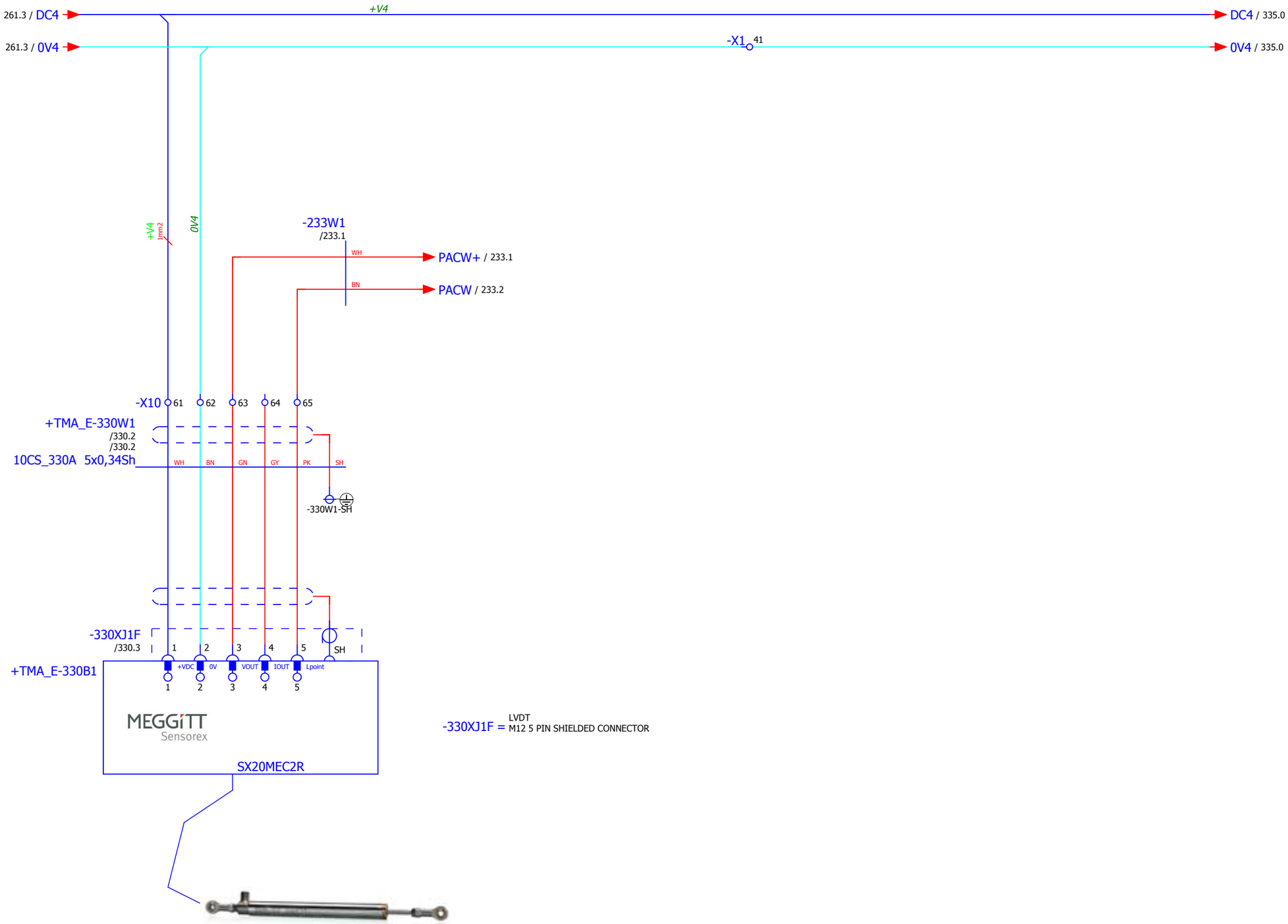

IK4 TEKNIKER Research Alliance
IK4-TEKNIKER
AVDA. OTAOLA 20
20600 Eibar (Gipuzkoa) Spain
Tfno.:(+34) 943 206744
Fax: (+34) 943 202757
Web: www.tekniker.es

Date	15/12/2017						
Reviewed	F.LÓPEZ	2.3	15/12/2017	JOSE MANUEL			
Drew by	JOSE MANUEL	Review	Date	Name	Review	Date	Name

3151_LSST
MCS Design Electrical Schematics
LSST TELESCOPE
Replaces
Replaced by

AZIMUTH CABLE WRAP LVDT

Customer: EMPRESARIOS AGRUPADOS
C/Magallanes, 3
28015 MADRID
91 3098000
http://www.empresariosagrupados.es/

= E1
+ TMA-AZ-CS-CBT-0001

24VDC CONTROL

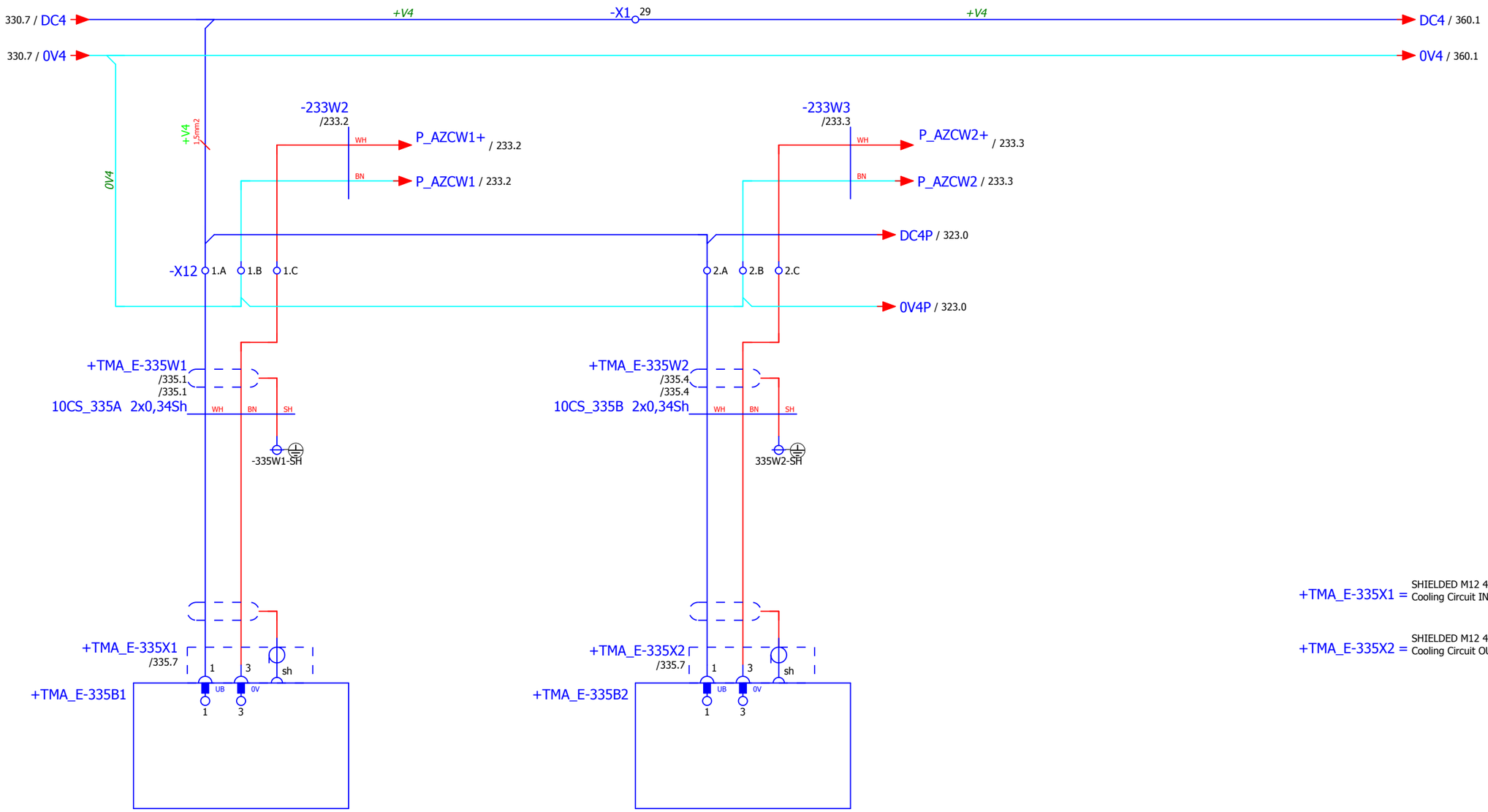

AZCW+
COOLING CIRCUIT IN PRESSURE

AZCW+
COOLING CIRCUIT OUT PRESSURE

+TMA_E-335X1 = SHIELDED M12 4 PIN
Cooling Circuit IN pressure AZCW X+

+TMA_E-335X2 = SHIELDED M12 4 PIN
Cooling Circuit OUT pressure AZCW X+

TBD SENSOR:
TYPE OF SENSOR AND CONNECTION
REPRESENTED 4-20mA 2 WIRE M12 4 PIN CONNECTOR

IK4 TEKNIKER Research Alliance
IK4-TEKNIKER
AVDA. OTAOLA 20
20600 Eibar (Gipuzkoa) Spain
Tfno.:(+34) 943 206744
Fax: (+34) 943 202757
Web: www.tekniker.es

Date	15/12/2017						
Reviewed	F.LÓPEZ	2.3	15/12/2017	JOSE MANUEL			
Drew by	JOSE MANUEL	Review	Date	Name	Review	Date	Name

3151_LSST
MCS Design Electrical Schematics
LSST TELESCOPE
Replaces
Replaced by

AZCW+ COOLING PRESSURE SENSORS

Customer:
EMPRESARIOS AGRUPADOS
C/Magallanes, 3
28015 MADRID
91 3098000
http://www.empresariosagrupados.es/

= E1
+ TMA-AZ-CS-CBT-0001

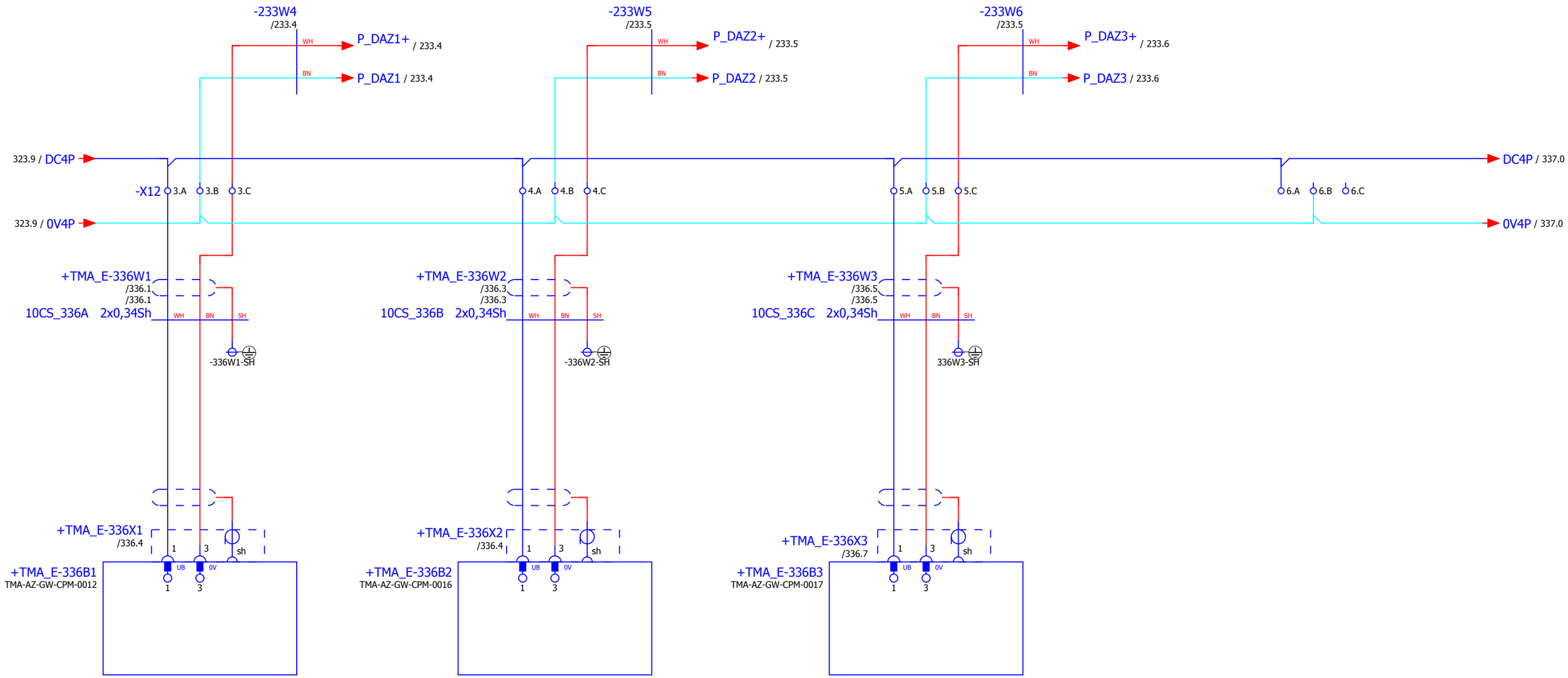

AZ 1-8 DRIVERS
COOLING CIRCUIT OUT PRESSURE

OSS AZIMUTH IO CABINET
OUTLET PRESSURE +X

OSS ELEVATION IO CABINET
OUTLET PRESSURE +X

TBD SENSOR:
TYPE OF SENSOR AND CONNECTION
REPRESENTED 4-20mA 2 WIRE M12 4 PIN CONNECTOR

+TMA_E-336X1 = AZ 1-8 DRIVERS COOLING CIRCUIT OUT PRESSURE

+TMA_E-336X2 = OSS AZIMUTH IO CABINET OUTLET PRESSURE +X

+TMA_E-336X3 = OSS ELEVATION IO CABINET OUTLET PRESSURE +X

IK4 TEKNIKER Research Alliance
IK4-TEKNIKER
AVDA. OTAOLA 20
20600 Eibar (Gipuzkoa) Spain
Tfno.:(+34) 943 206744
Fax: (+34) 943 202757
Web: www.tekniker.es

Date	15/12/2017						
Reviewed	F.LÓPEZ	2.3	15/12/2017	JOSE MANUEL			
Drew by	JOSE MANUEL	Review	Date	Name	Review	Date	Name

3151_LSST
MCS Design Electrical Schematics
LSST TELESCOPE

Replaces | Replaced by

AZ DRIVERS COOLING PRESSURE SENSORS

Customer: EMPRESARIOS AGRUPADOS
C/Magallanes, 3
28015 MADRID
91 3098000
http://www.empresariosagrupados.es/

= E1
+ TMA-AZ-CS-CBT-0001

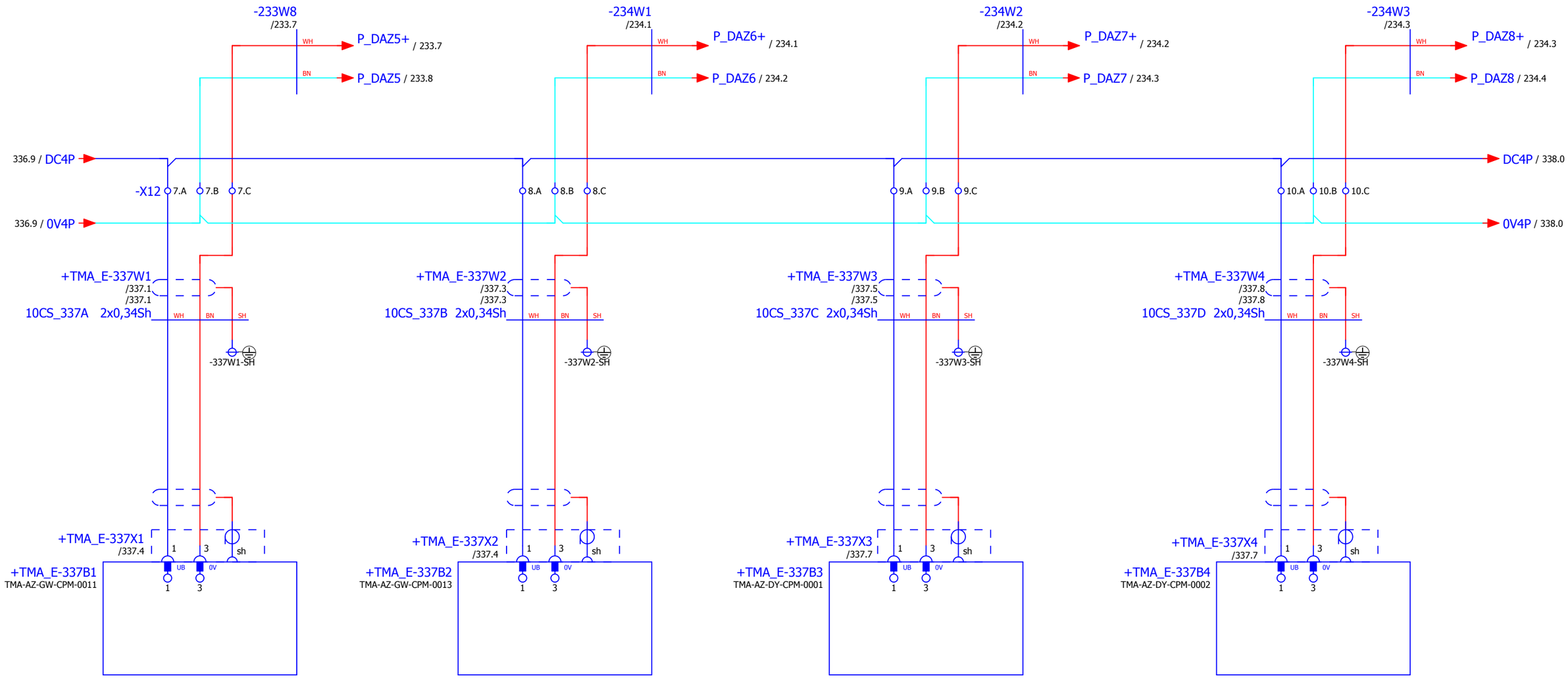

TBD SENSOR:
TYPE OF SENSOR AND CONNECTION
REPRESENTED 4-20mA 2 WIRE M12 4 PIN CONNECTOR

+TMA_E-337X1 = AZ 9-16 DRIVERS COOLING CIRCUIT OUT PRESSURE

+TMA_E-337X2 = COMPRESORS MODULE COOLING CIRCUIT OUT PRESSURE

+TMA_E-337X3 = AZ DYNALEN SUPPLY PRESSURE

+TMA_E-337X4 = AZ DYNALEN RETURN PRESSURE

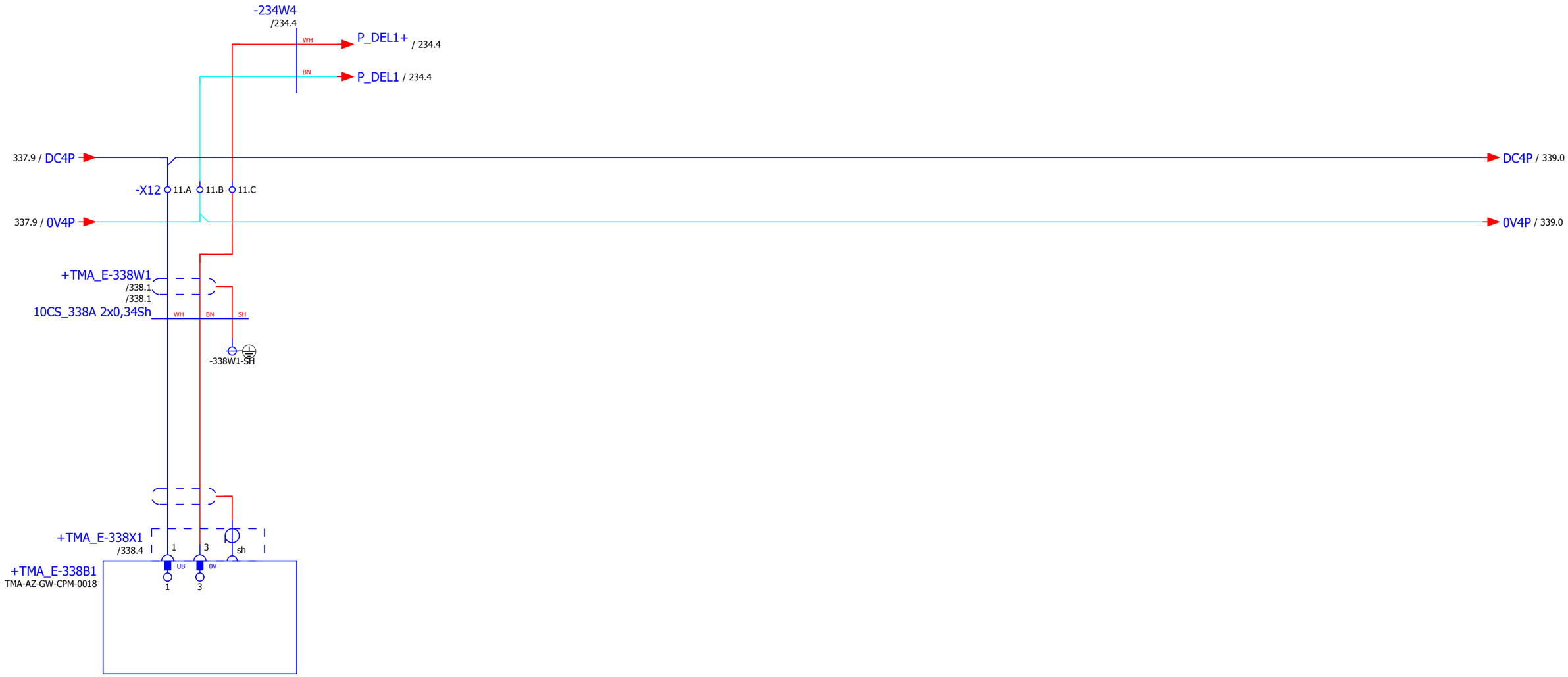

TBD SENSOR:
TYPE OF SENSOR AND CONNECTION
REPRESENTED 4-20mA 2 WIRE M12 4 PIN CONNECTOR

+TMA_E-338X1 = EL 1-6 DRIVERS COOLING CIRCUIT OUT PRESSURE

IK4 TEKNIKER Research Alliance
IK4-TEKNIKER
AVDA. OTAOLA 20
20600 Eibar (Gipuzkoa) Spain
Tfno.:(+34) 943 206744
Fax: (+34) 943 202757
Web: www.tekniker.es

Date	15/12/2017						
Reviewed	F.LÓPEZ	2.3	15/12/2017	JOSE MANUEL			
Drew by	JOSE MANUEL	Review	Date	Name	Review	Date	Name

3151_LSST
MCS Design Electrical Schematics
LSST TELESCOPE
Replaces
Replaced by

EL DRIVERS COOLING PRESSURE SENSORS

Customer:
EMPRESARIOS AGRUPADOS
C/Magallanes, 3
28015 MADRID
91 3098000
http://www.empresariosagrupados.es/

= E1
+ TMA-AZ-CS-CBT-0001

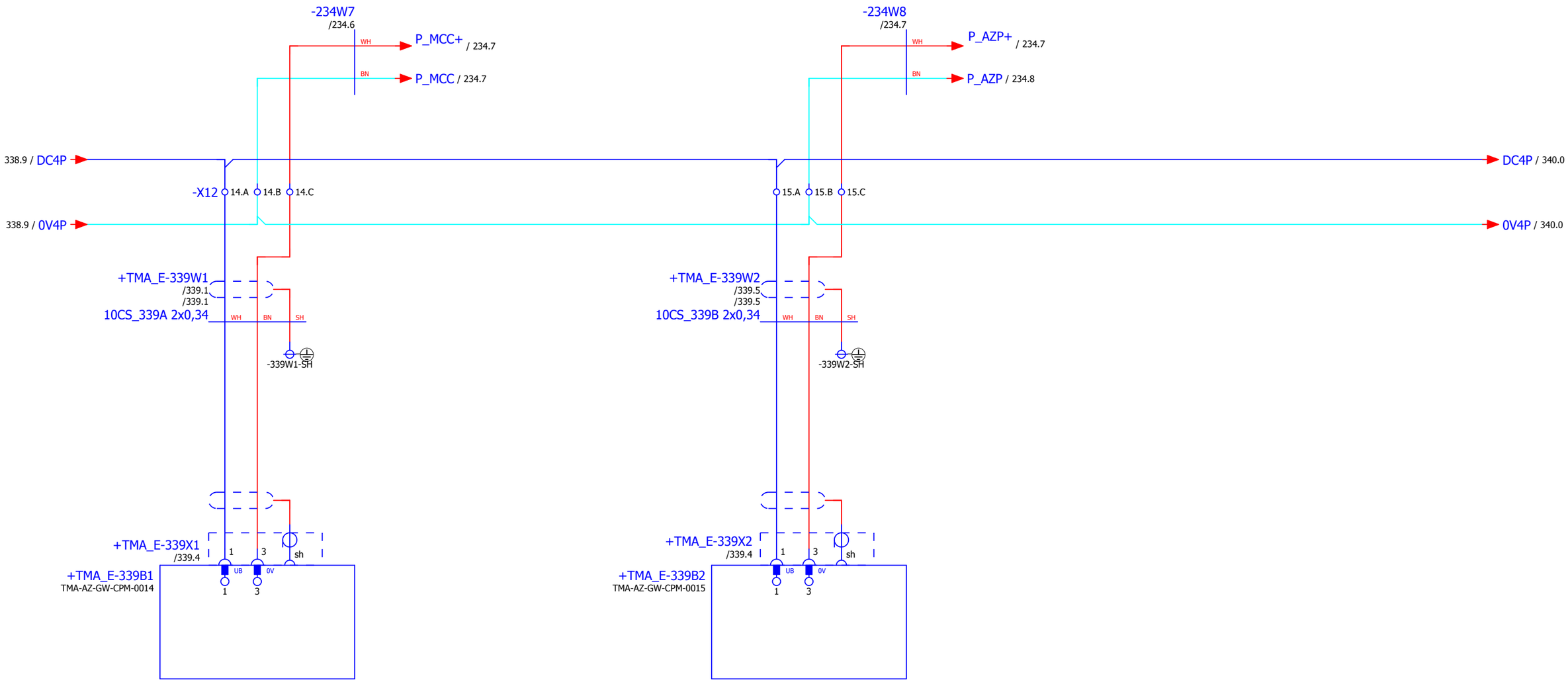

MCC CABINET
COOLING CIRCUIT OUT PRESSURE

AZ PANEL
COOLING CIRCUIT OUT PRESSURE

TBD SENSOR:
TYPE OF SENSOR AND CONNECTION
REPRESENTED 4-20mA 2 WIRE M12 4 PIN CONNECTOR

+TMA_E-339X1 = SHIELDED M12 4 PIN
MCC CABINET Cooling Circuit OUT pressure

+TMA_E-339X2 = SHIELDED M12 4 PIN
AZ PANEL Cooling Circuit OUT pressure

IK4 TEKNIKER Research Alliance
IK4-TEKNIKER
AVDA. OTAOLA 20
20600 Eibar (Gipuzkoa) Spain
Tfno.:(+34) 943 206744
Fax: (+34) 943 202757
Web: www.tekniker.es

Date	15/12/2017						
Reviewed	F.LÓPEZ	2.3	15/12/2017	JOSE MANUEL			
Drew by	JOSE MANUEL	Review	Date	Name	Review	Date	Name

3151_LSST
MCS Design Electrical Schematics
LSST TELESCOPE

Replaces | Replaced by

MCC CABINEL & AZ PANEL
COOLING PRESSURE SENSORS

Customer: EMPRESARIOS AGRUPADOS
C/Magallanes, 3
28015 MADRID
91 3098000
http://www.empresariosagrupados.es/

= E1
+ TMA-AZ-CS-CBT-0001

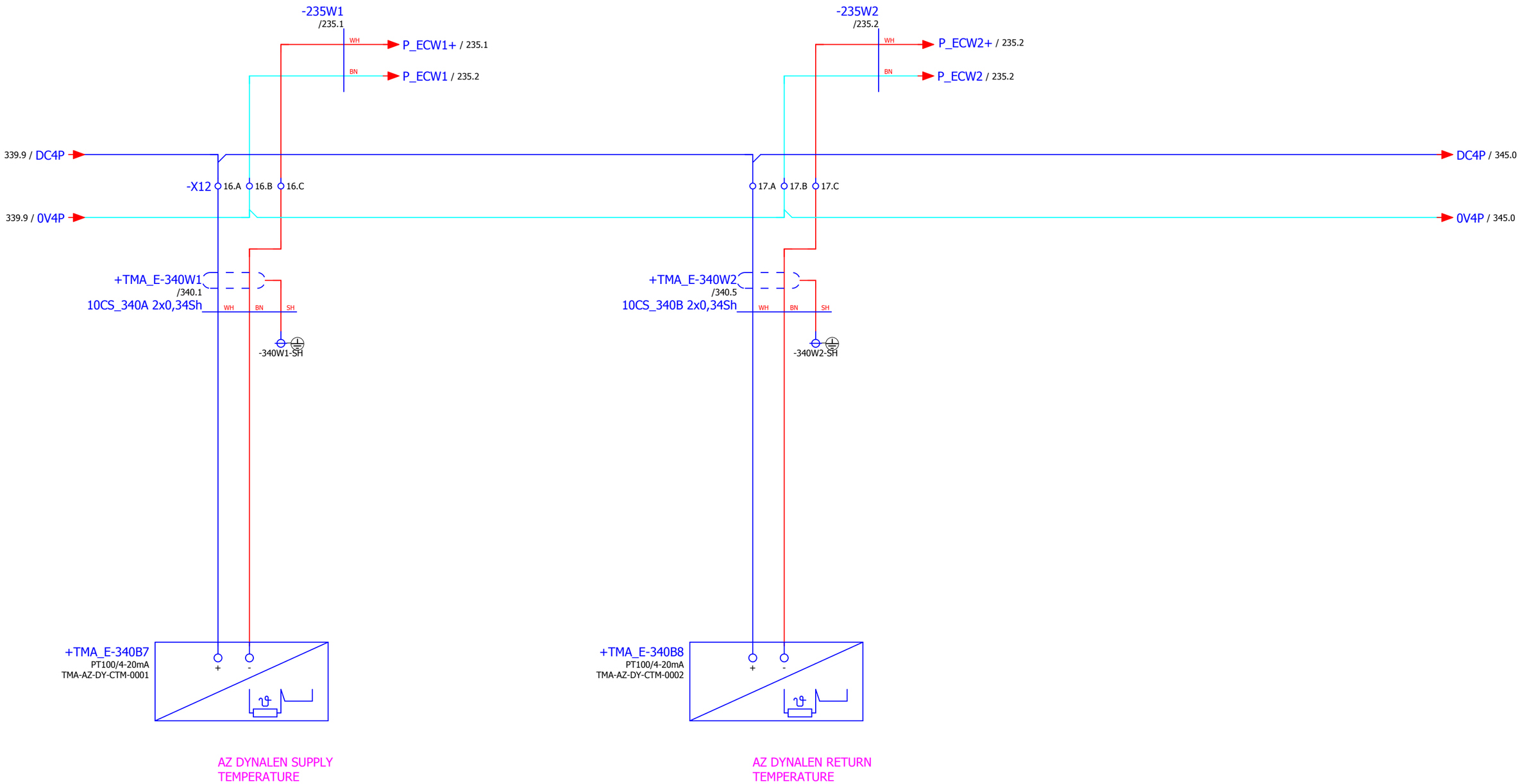

IK4 TEKNIKER Research Alliance

IK4-TEKNIKER
AVDA. OTAOLA 20
20600 Eibar (Gipuzkoa) Spain
Tfno.:(+34) 943 206744
Fax: (+34) 943 202757
Web: www.tekniker.es

Date	15/12/2017						
Reviewed	F.LÓPEZ	2.3	15/12/2017	JOSE MANUEL			
Drew by	JOSE MANUEL	Review	Date	Name	Review	Date	Name

3151_LSST

MCS Design Electrical Schematics

LSST TELESCOPE

Replaces

Replaced by

AZIMUTH DYNALEN TEMPERATURE

Customer:

EMPRESARIOS AGRUPADOS

C/Magallanes, 3
28015 MADRID
91 3098000

http://www.empresariosagrupados.es/

= E1

+ TMA-AZ-CS-CBT-0001

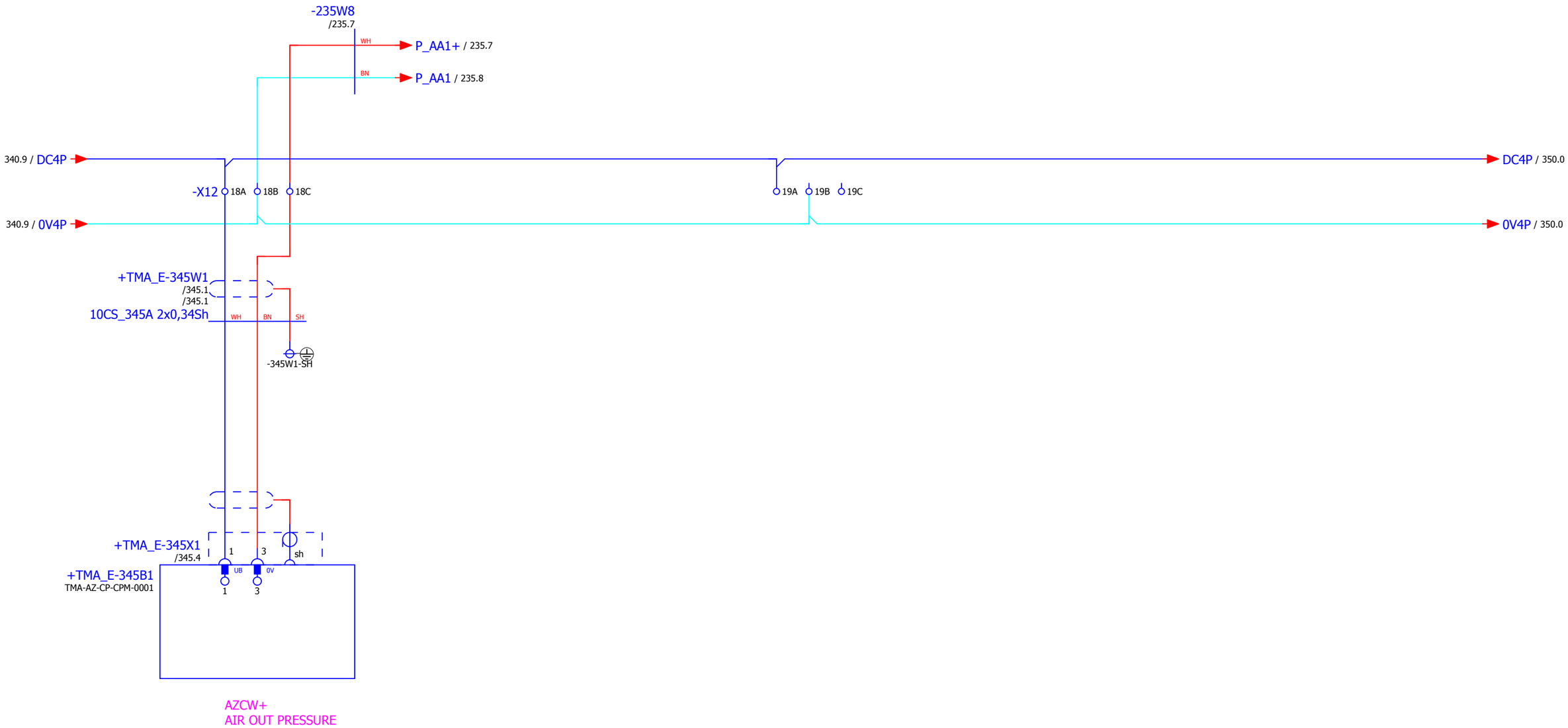

+TMA_E-345X1 = SHIELDED M12 4 PIN
AZCW+ AIR OUT pressure

TBD SENSOR:
TYPE OF SENSOR AND CONNECTION
REPRESENTED 4-20mA 2 WIRE M12 4 PIN CONNECTOR

IK4 TEKNIKER Research Alliance
IK4-TEKNIKER
AVDA. OTAOLA 20
20600 Eibar (Gipuzkoa) Spain
Tfno.:(+34) 943 206744
Fax: (+34) 943 202757
Web: www.tekniker.es

Date	15/12/2017						
Reviewed	F.LÓPEZ	2.3	15/12/2017	JOSE MANUEL			
Drew by	JOSE MANUEL	Review	Date	Name	Review	Date	Name

3151_LSST
MCS Design Electrical Schematics
LSST TELESCOPE

Replaces | Replaced by

AIR PRESSURE SENSORS

Customer: EMPRESARIOS AGRUPADOS
C/Magallanes, 3
28015 MADRID
91 3098000
http://www.empresariosagrupados.es/

= E1
+ TMA-AZ-CS-CBT-0001

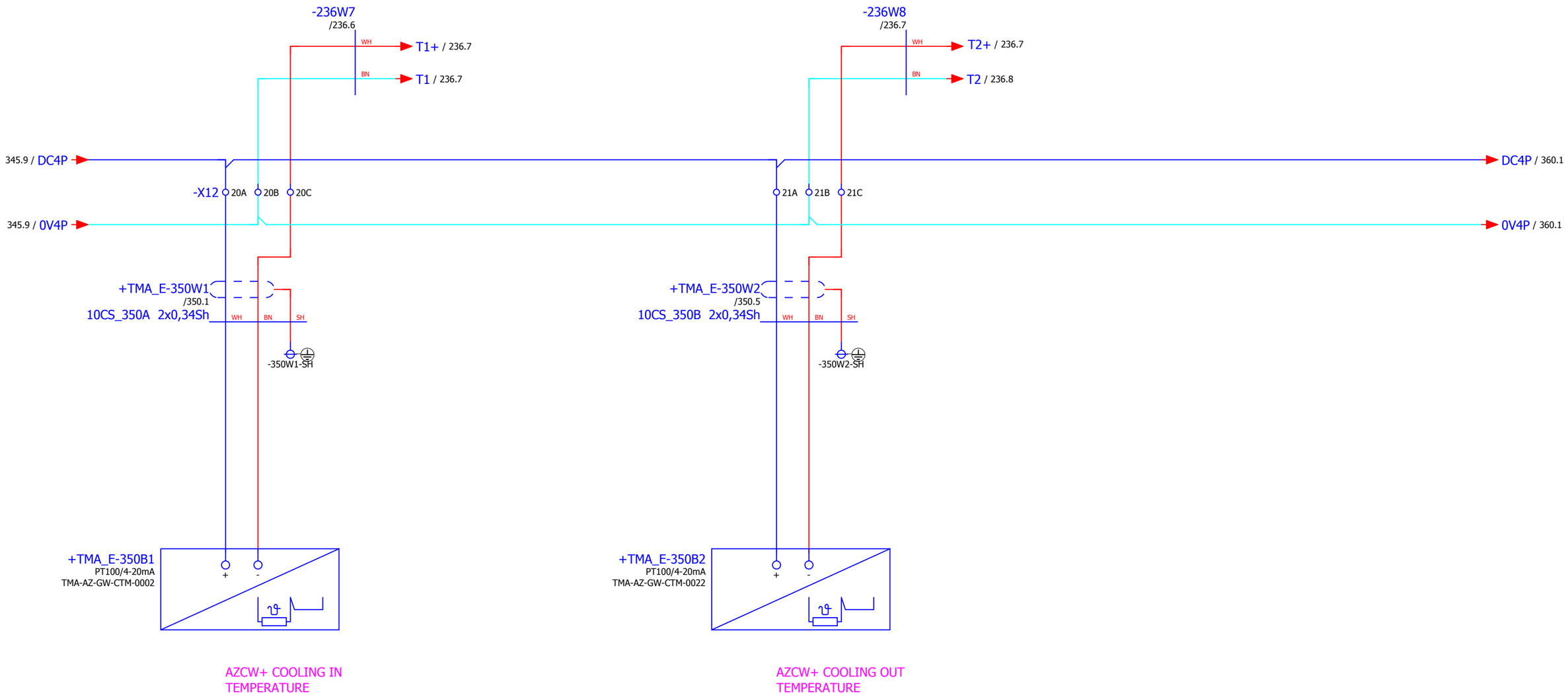

IK4-TEKNIKER
AVDA. OTAOLA 20
20600 Eibar (Gipuzkoa) Spain
Tfno.:(+34) 943 206744
Fax: (+34) 943 202757
Web: www.tekniker.es

Date	15/12/2017						
Reviewed	F.LÓPEZ	2.3	15/12/2017	JOSE MANUEL			
Drew by	JOSE MANUEL	Review	Date	Name	Review	Date	Name

3151_LSST
MCS Design Electrical Schematics
LSST TELESCOPE

Replaces | Replaced by

AZCW+ TEMPERATURE PRESSURE SENSORS

Customer: EMPRESARIOS AGRUPADOS
C/Magallanes, 3
28015 MADRID
91 3098000
http://www.empresariosagrupados.es/

= E1
+ TMA-AZ-CS-CBT-0001

Page 350
Total number 710

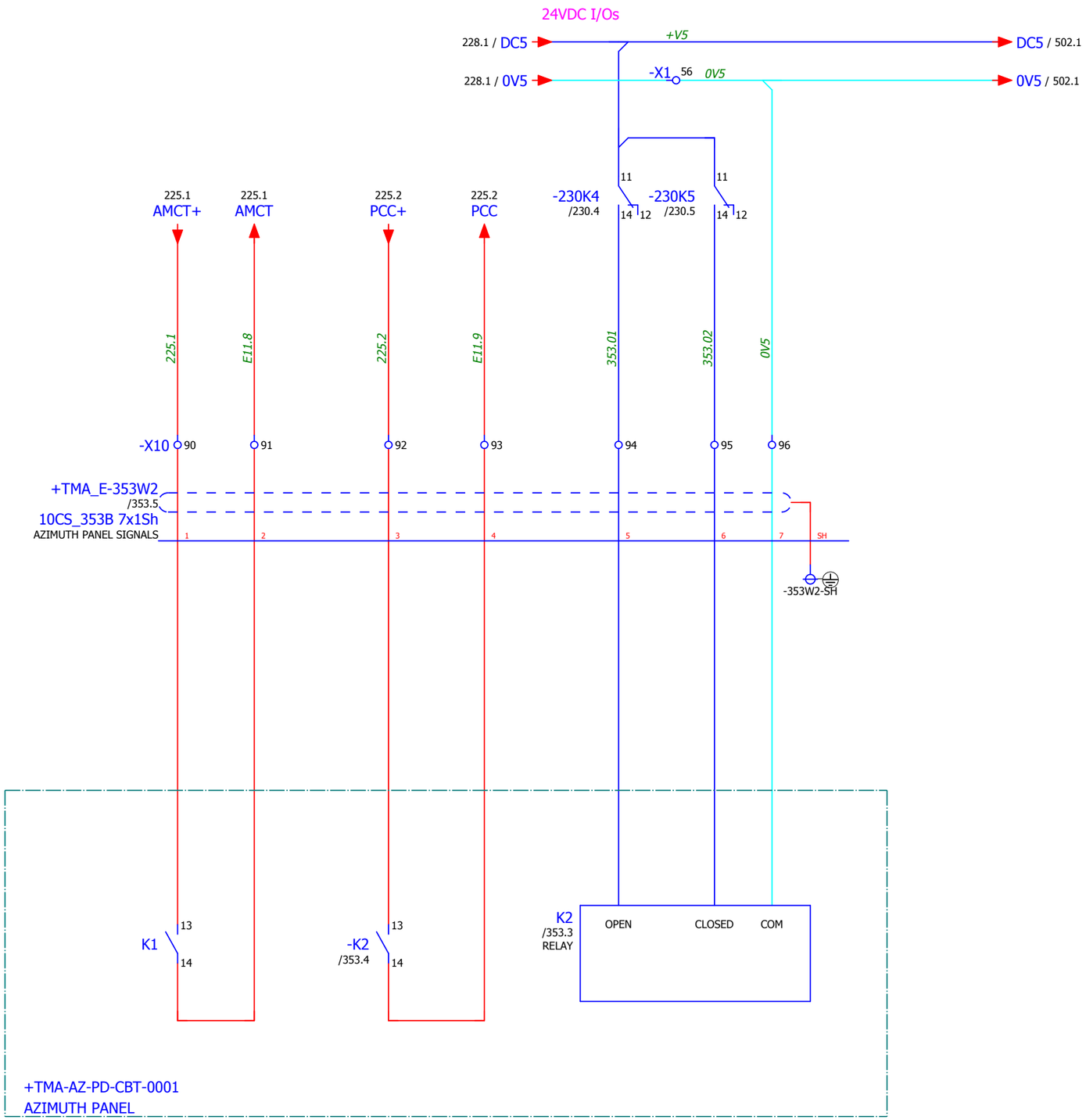

IK4-TEKNIKER
AVDA. OTAOLA 20
20600 Eibar (Gipuzkoa) Spain
Tfno.:(+34) 943 206744
Fax: (+34) 943 202757
Web: www.tekniker.es

Date	15/12/2017						
Reviewed	F.LÓPEZ	2.3	15/12/2017	JOSE MANUEL			
Drew by	JOSE MANUEL	Review	Date	Name	Review	Date	Name

3151_LSST

MCS Design Electrical Schematics

LSST TELESCOPE

Replaces

Replaced by

AZIMUTH PANEL SIGNALS

Customer:

EMPRESARIOS AGRUPADOS
C/Magallanes, 3
28015 MADRID
91 3098000
http://www.empresariosagrupados.es/

= E1

+ TMA-AZ-CS-CBT-0001

Page 353
Total number 710

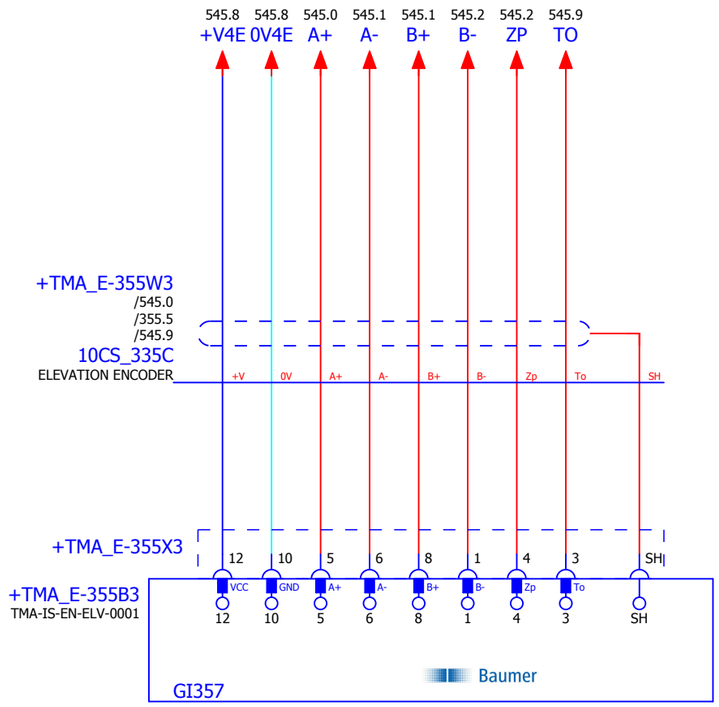

+TMA_E-355X3 = M23 CONNECTOR ELEVATION ENCODER

IK4-TEKNIKER
AVDA. OTAOLA 20
20600 Eibar (Gipuzkoa) Spain
Tfno.:(+34) 943 206744
Fax: (+34) 943 202757
Web: www.tekniker.es

Date	15/12/2017						
Reviewed	F.LÓPEZ	2.3	15/12/2017	JOSE MANUEL			
Drew by	JOSE MANUEL	Review	Date	Name	Review	Date	Name

3151_LSST

MCS Design Electrical Schematics

LSST TELESCOPE

Replaces | Replaced by

ELEVATION ENCODER

Customer: EMPRESARIOS AGRUPADOS
C/Magallanes, 3
28015 MADRID
91 3098000
http://www.empresariosagrupados.es/

= E1

+ TMA-AZ-CS-CBT-0001

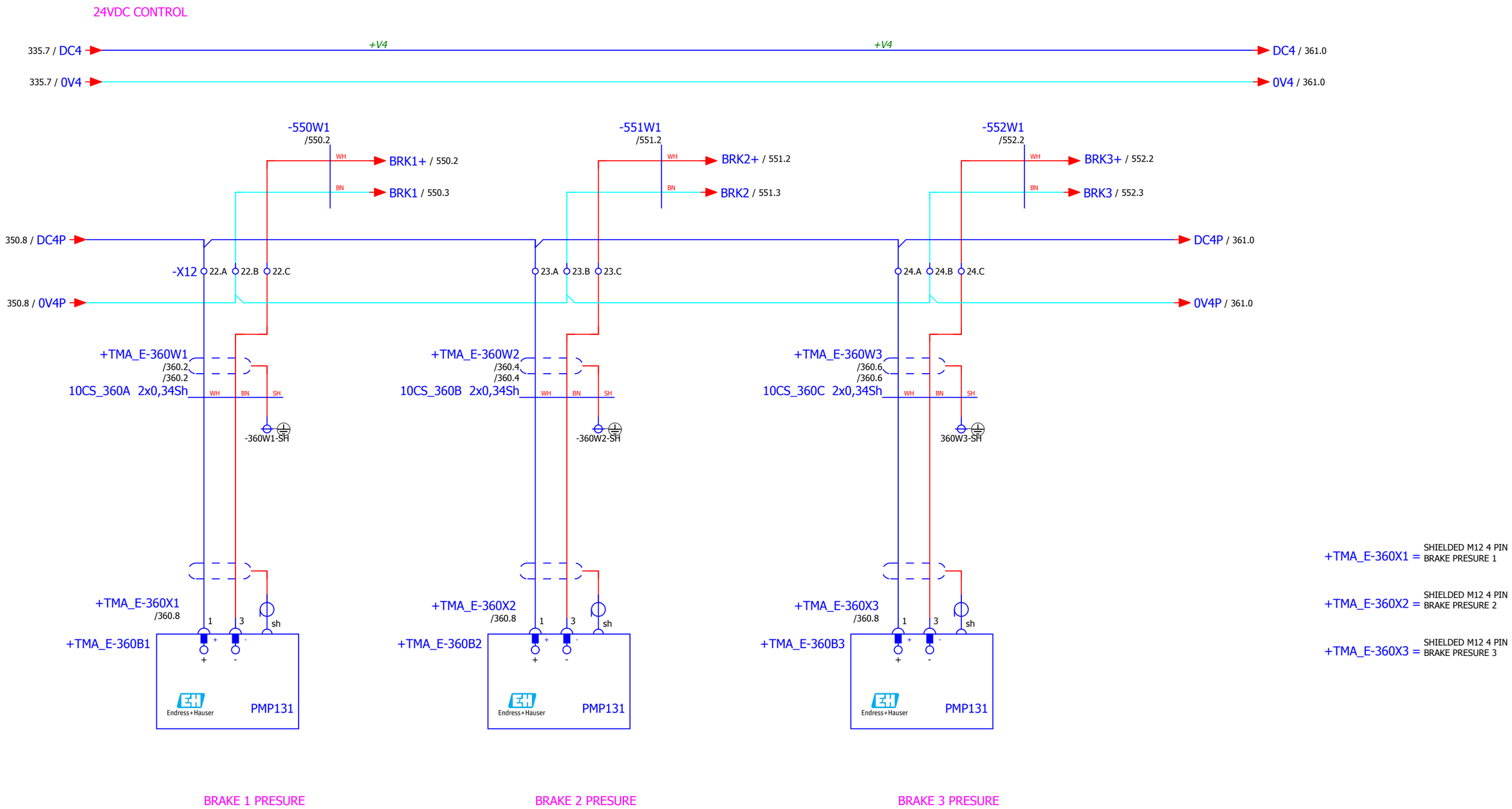

IK4 TEKNIKER Research Alliance

IK4-TEKNIKER
AVDA. OTAOLA 20
20600 Eibar (Gipuzkoa) Spain
Tfno.:(+34) 943 206744
Fax: (+34) 943 202757
Web: www.tekniker.es

Date	15/12/2017						
Reviewed	F.LÓPEZ	2.3	15/12/2017	JOSE MANUEL			
Drew by	JOSE MANUEL	Review	Date	Name	Review	Date	Name

3151_LSST

MCS Design Electrical Schematics

LSST TELESCOPE

Replaces | Replaced by

BRAKE PRESSURE

Customer: EMPRESARIOS AGRUPADOS

C/Magallanes, 3
28015 MADRID
91 3098000

http://www.empresariosagrupados.es/

= E1

+ TMA-AZ-CS-CBT-0001

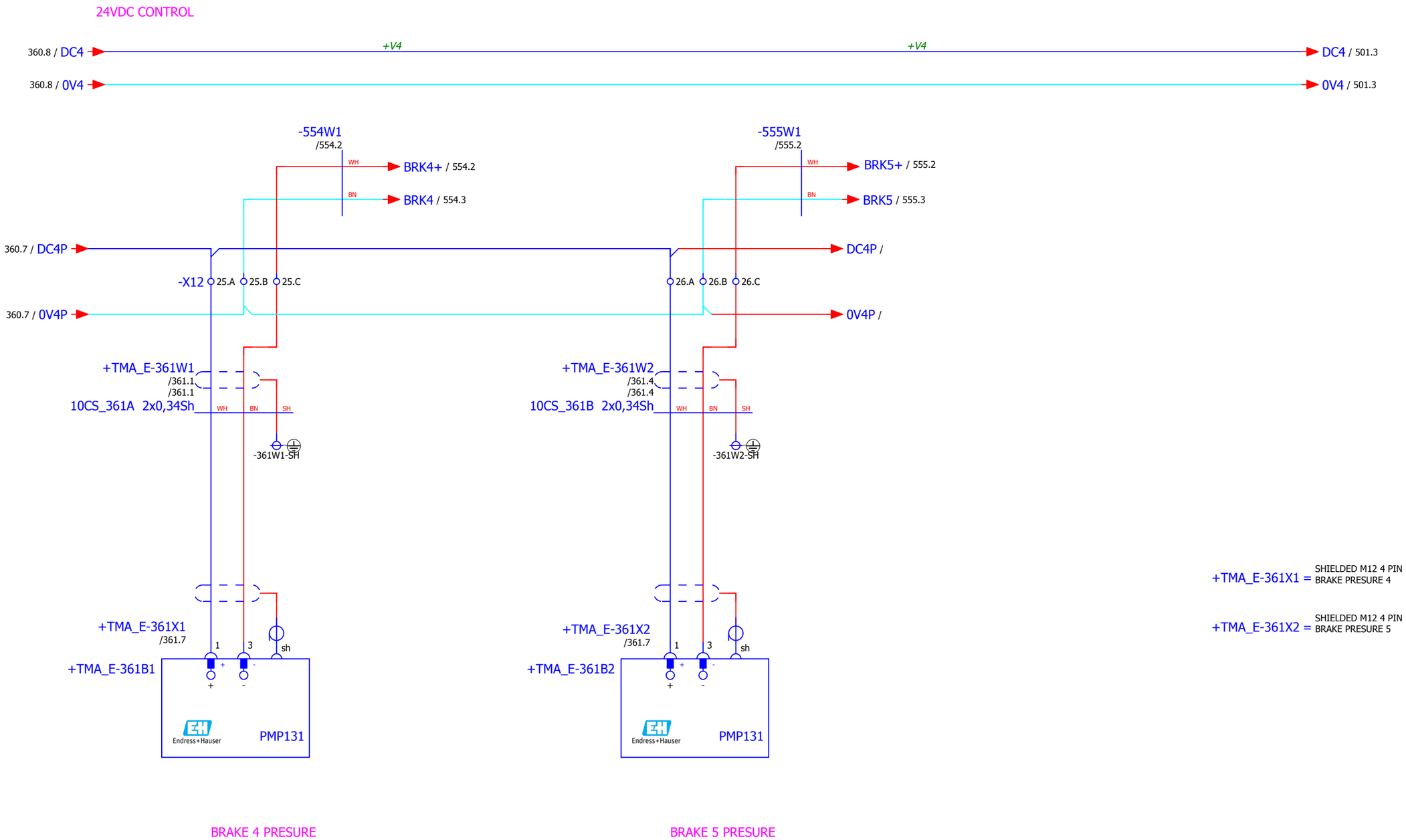

+TMA_E-361X1 = SHIELDED M12 4 PIN BRAKE PRESURE 4

+TMA_E-361X2 = SHIELDED M12 4 PIN BRAKE PRESURE 5

IK4-TEKNIKER
AVDA. OTAOLA 20
20600 Eibar (Gipuzkoa) Spain
Tfno.:(+34) 943 206744
Fax: (+34) 943 202757
Web: www.tekniker.es

Date	15/12/2017						
Reviewed	F.LÓPEZ	2.3	15/12/2017	JOSE MANUEL			
Drew by	JOSE MANUEL	Review	Date	Name	Review	Date	Name

3151_LSST

MCS Design Electrical Schematics

LSST TELESCOPE

Replaces | Replaced by

BRAKE PRESSURE

Customer: EMPRESARIOS AGRUPADOS
C/Magallanes, 3
28015 MADRID
91 3098000
http://www.empresariosagrupados.es/

= E1

+ TMA-AZ-CS-CBT-0001

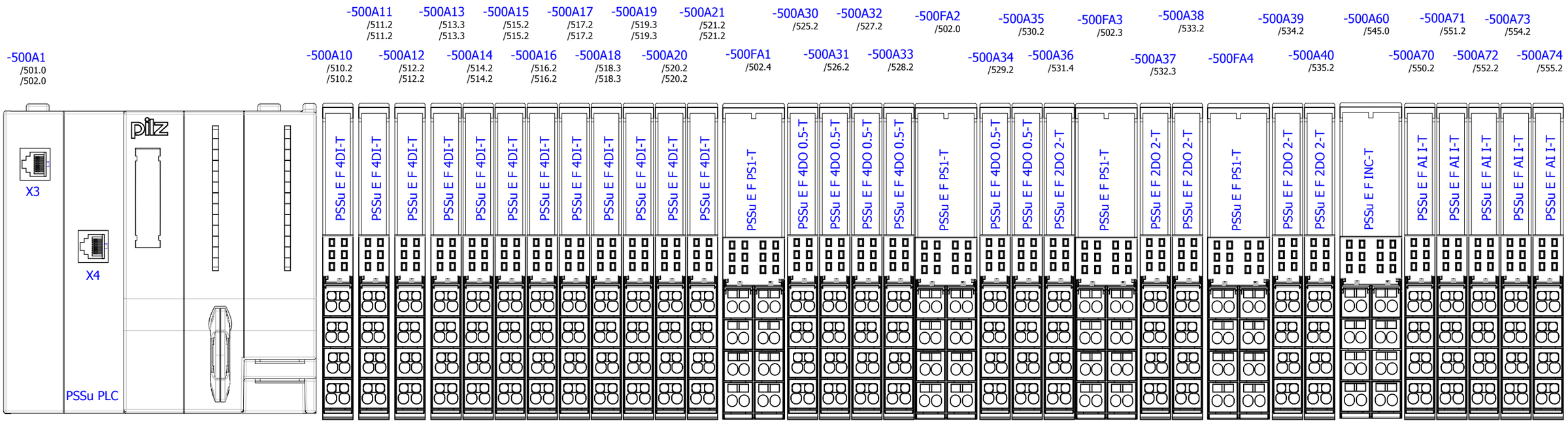

◁ 361

501 ▷

IK4-TEKNIKER
AVDA. OTAOLA 20
20600 Eibar (Gipuzkoa) Spain
Tfno.:(+34) 943 206744
Fax: (+34) 943 202757
Web: www.tekniker.es

Date	15/12/2017						
Reviewed	F.LÓPEZ	2.3	15/12/2017	JOSE MANUEL			
Drew by	JOSE MANUEL	Review	Date	Name	Review	Date	Name

3151_LSST
MCS Design Electrical Schematics
LSST TELESCOPE

Replaces | Replaced by

EMERGENCY PLC PSSuniversal

Customer:
EMPRESARIOS AGRUPADOS
C/Magallanes, 3
28015 MADRID
91 3098000
http://www.empresariosagrupados.es/

= E1
+ TMA-AZ-CS-CBT-0001

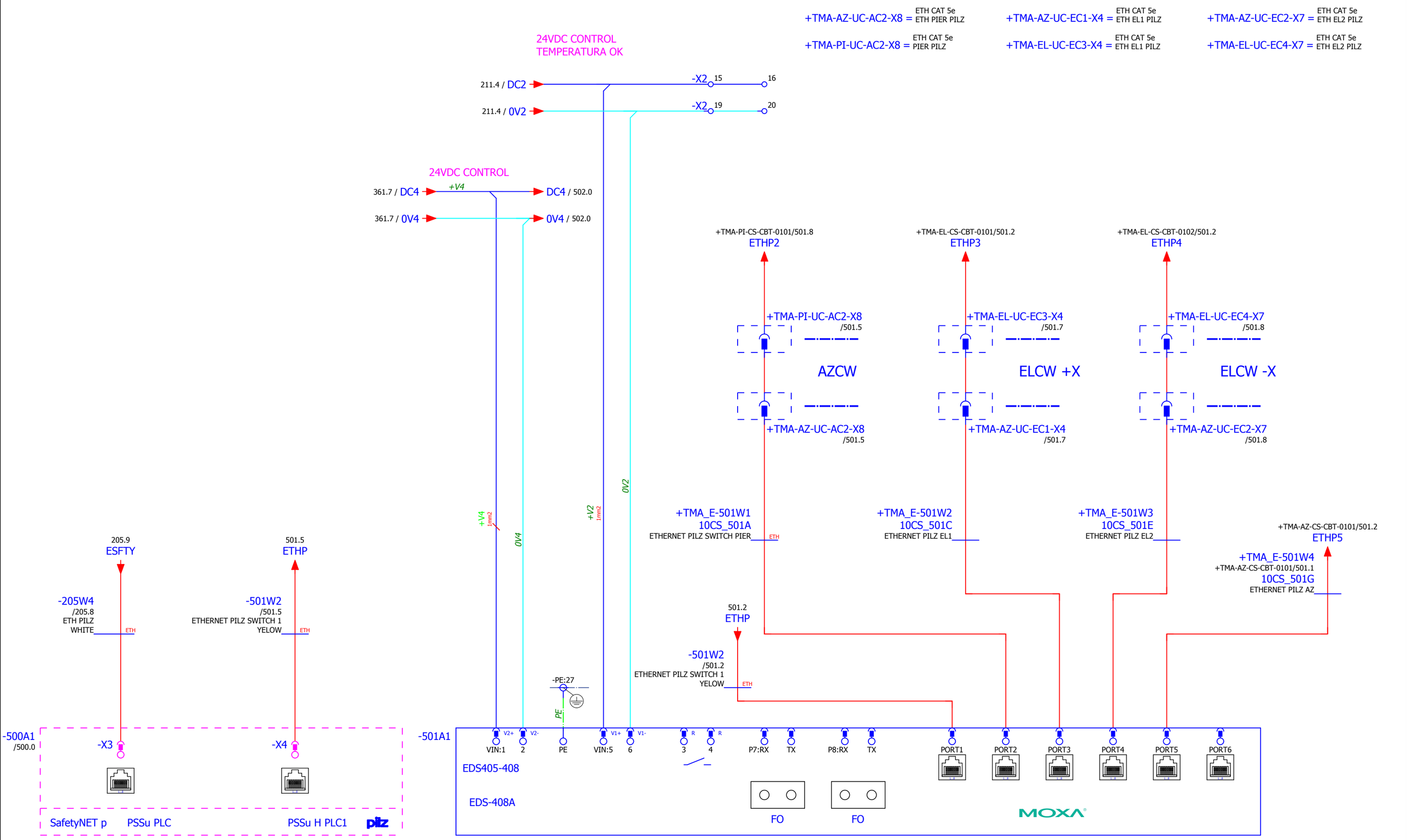

IK4 TEKNIKER Research Alliance

IK4-TEKNIKER
AVDA. OTAOLA 20
20600 Eibar (Gipuzkoa) Spain
Tfno.:(+34) 943 206744
Fax: (+34) 943 202757
Web: www.tekniker.es

Date	15/12/2017						
Reviewed	F.LÓPEZ	2.3	15/12/2017	JOSE MANUEL			
Drew by	JOSE MANUEL	Review	Date	Name	Review	Date	Name

3151_LSST

MCS Design Electrical Schematics

LSST TELESCOPE

Replaces | Replaced by

SAFETY NET

Customer: EMPRESARIOS AGRUPADOS
C/Magallanes, 3
28015 MADRID
91 3098000
http://www.empresariosagrupados.es/

= E1

+ TMA-AZ-CS-CBT-0001

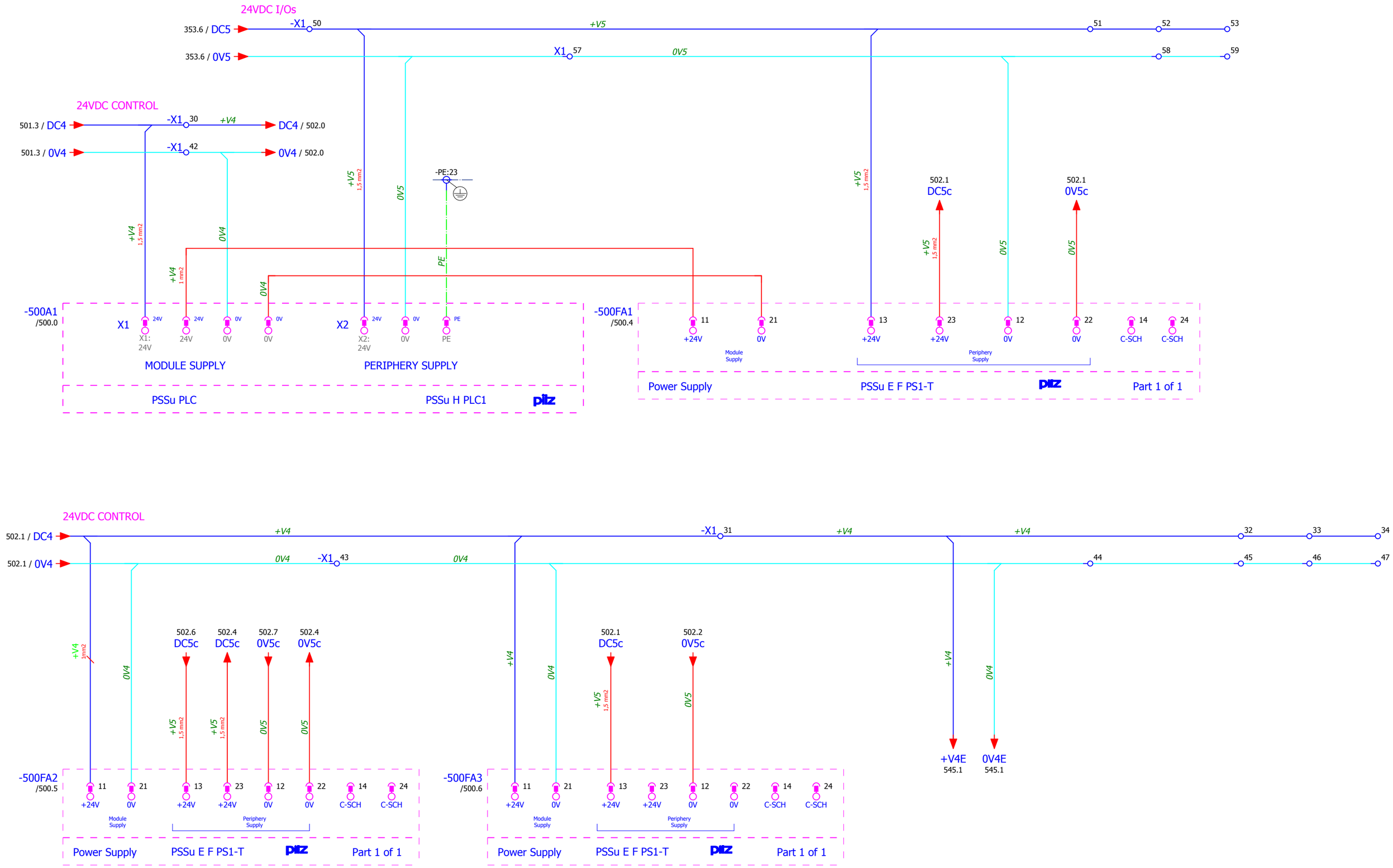

◁ 501

510 ▷

IK4 TEKNIKER Research Alliance	IK4-TEKNIKER AVDA. OTAOLA 20 20600 Eibar (Gipuzkoa) Spain Tfno.:(+34) 943 206744 Fax: (+34) 943 202757 Web: www.tekniker.es								3151_LSST	MCS Design Electrical Schematics LSST TELESCOPE	POWER SAFETY PSS
		Date	14/12/2017								
		Reviewed	F.LÓPEZ	2.3	15/12/2017	JOSE MANUEL					
		Drew by	JOSE MANUEL	Review	Date	Name	Review	Date	Name	Replaces	Replaced by

Customer: EMPRESARIOS AGRUPADOS
C/Magallanes, 3
28015 MADRID
91 3098000
http://www.empresariosagrupados.es/

= E1
+ TMA-AZ-CS-CBT-0001

Page 502
Total number 710

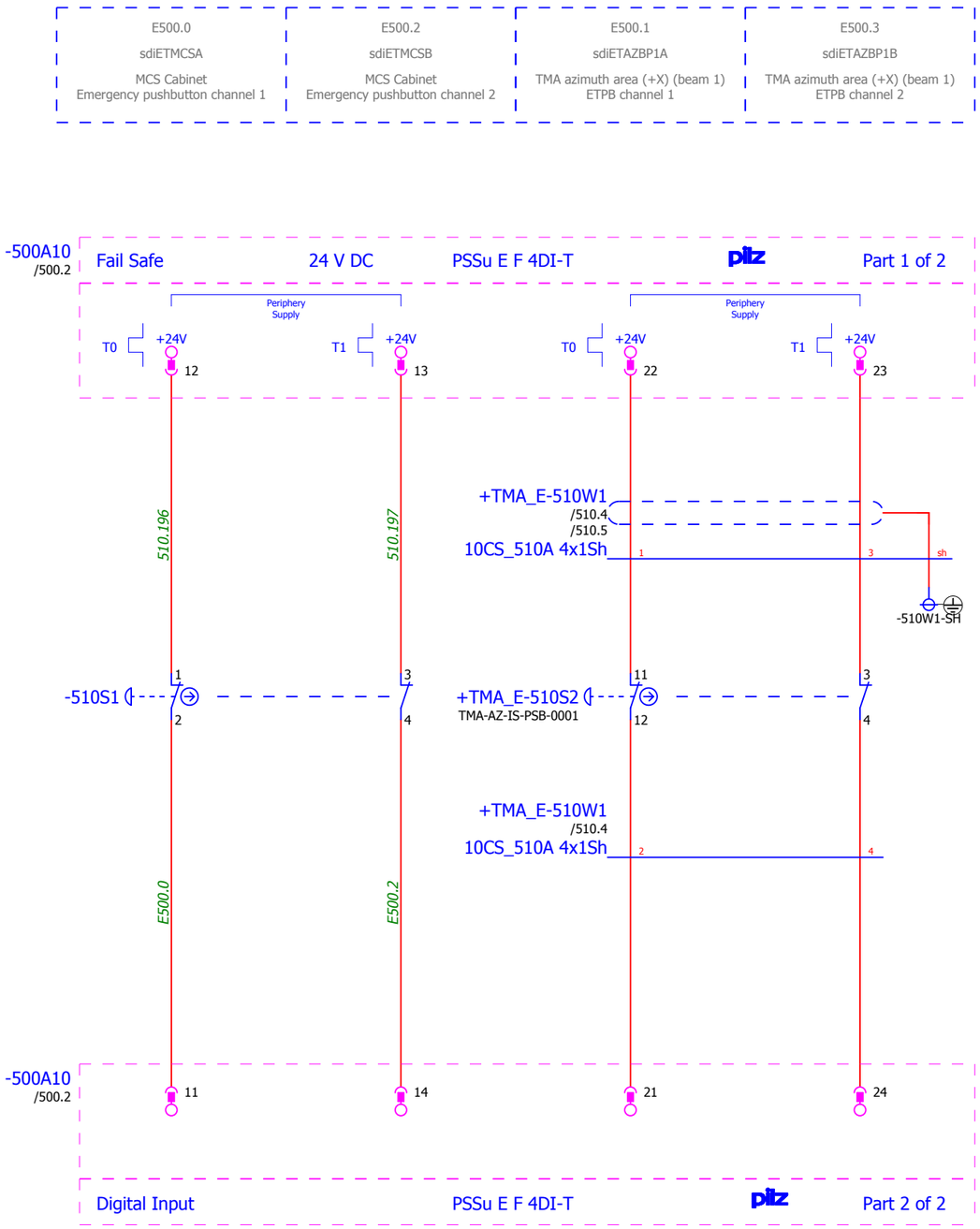

IK4 TEKNIKER Research Alliance
IK4-TEKNIKER
AVDA. OTAOLA 20
20600 Eibar (Gipuzkoa) Spain
Tfno.:(+34) 943 206744
Fax: (+34) 943 202757
Web: www.tekniker.es

Date	15/12/2017						
Reviewed	F.LÓPEZ	2.3	15/12/2017	JOSE MANUEL			
Drew by	JOSE MANUEL	Review	Date	Name	Review	Date	Name

3151_LSST

MCS Design Electrical Schematics

LSST TELESCOPE

Replaces | Replaced by

SAFETY DIGITAL INPUTS

Customer: EMPRESARIOS AGRUPADOS
C/Magallanes, 3
28015 MADRID
91 3098000
http://www.empresariosagrupados.es/

= E1
+ TMA-AZ-CS-CBT-0001

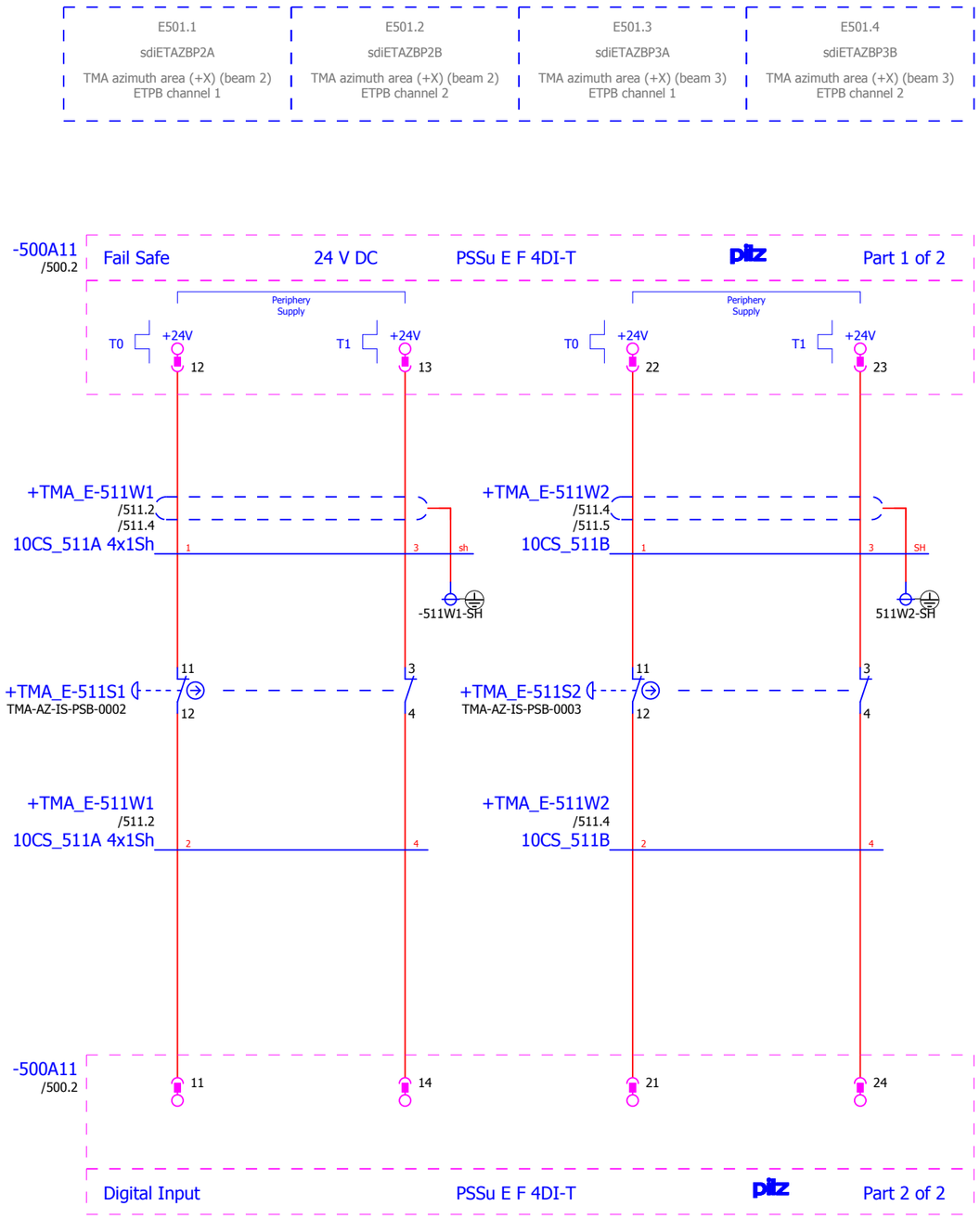

IK4-TEKNIKER
AVDA. OTAOLA 20
20600 Eibar (Gipuzkoa) Spain
Tfno.:(+34) 943 206744
Fax: (+34) 943 202757
Web: www.tekniker.es

Date	15/12/2017						
Reviewed	F.LÓPEZ	2.3	15/12/2017	JOSE MANUEL			
Drew by	JOSE MANUEL	Review	Date	Name	Review	Date	Name

3151_LSST
MCS Design Electrical Schematics
LSST TELESCOPE

Replaces | Replaced by

SAFETY DIGITAL INPUTS

Customer: EMPRESARIOS AGRUPADOS
C/Magallanes, 3
28015 MADRID
91 3098000
http://www.empresariosagrupados.es/

= E1
+ TMA-AZ-CS-CBT-0001

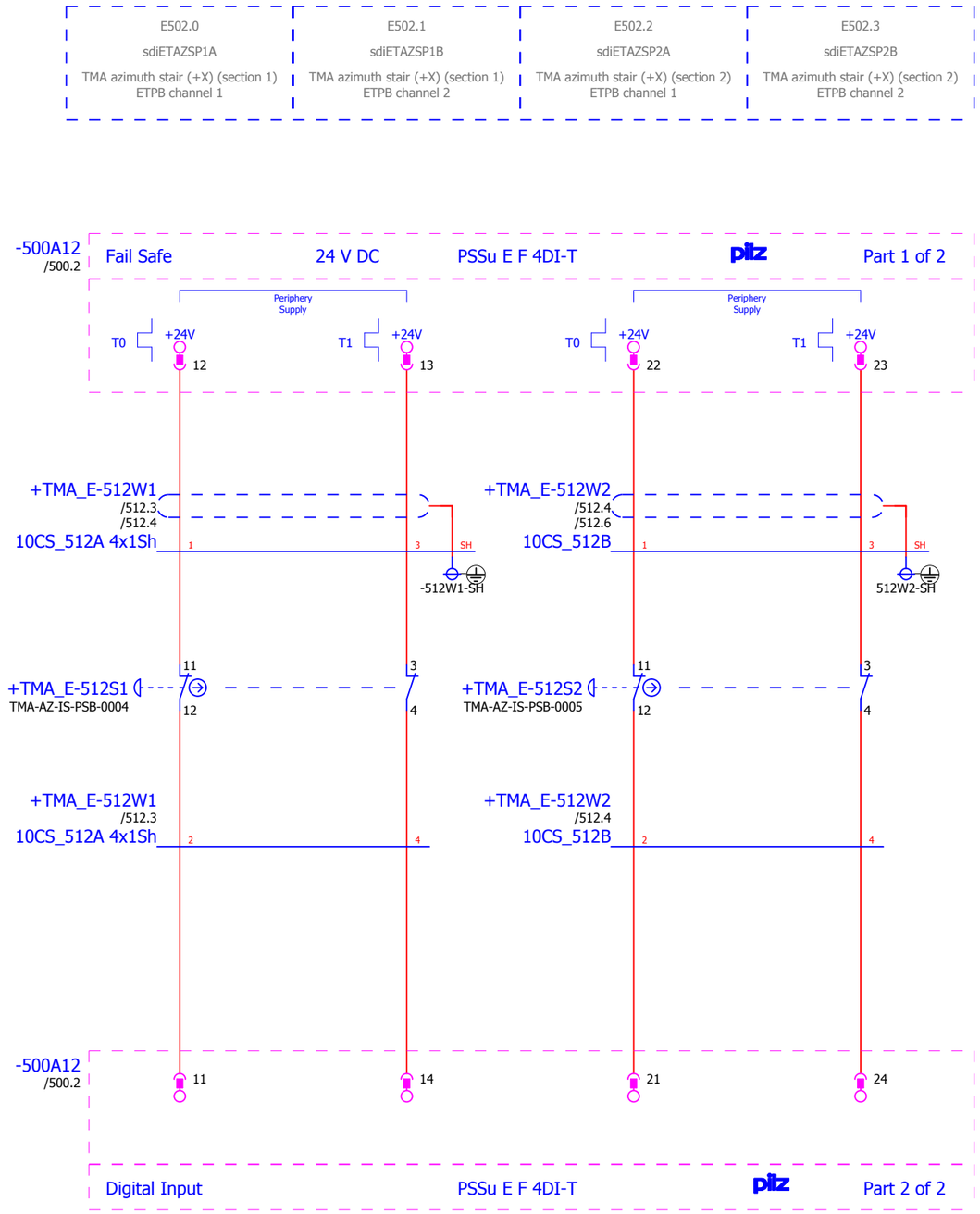

IK4 TEKNIKER Research Alliance

IK4-TEKNIKER
AVDA. OTAOLA 20
20600 Eibar (Gipuzkoa) Spain
Tfno.:(+34) 943 206744
Fax: (+34) 943 202757
Web: www.tekniker.es

Date	15/12/2017						
Reviewed	F.LÓPEZ	2.3	15/12/2017	JOSE MANUEL			
Drew by	JOSE MANUEL	Review	Date	Name	Review	Date	Name

3151_LSST

MCS Design Electrical Schematics

LSST TELESCOPE

Replaces

Replaced by

SAFETY DIGITAL INPUTS

Customer:

EMPRESARIOS AGRUPADOS

C/Magallanes, 3
28015 MADRID
91 3098000

http://www.empresariosagrupados.es/

= E1

+ TMA-AZ-CS-CBT-0001

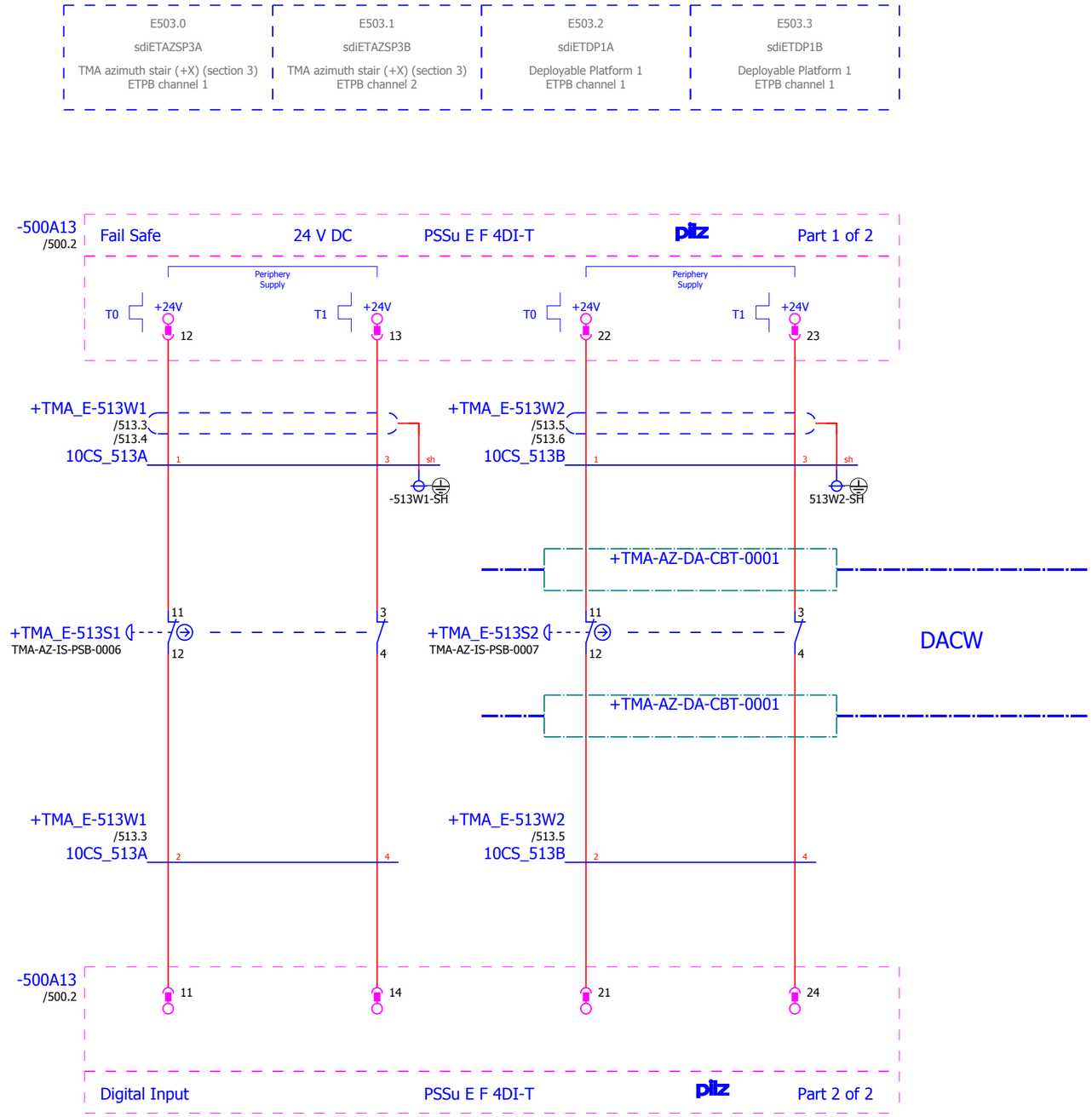

IK4 TEKNIKER Research Alliance
IK4-TEKNIKER
AVDA. OTAOLA 20
20600 Eibar (Gipuzkoa) Spain
Tfno.:(+34) 943 206744
Fax: (+34) 943 202757
Web: www.tekniker.es

Date	15/12/2017						
Reviewed	F.LÓPEZ	2.3	15/12/2017	JOSE MANUEL			
Drew by	JOSE MANUEL	Review	Date	Name	Review	Date	Name

3151_LSST
MCS Design Electrical Schematics
LSST TELESCOPE

Replaces | Replaced by

SAFETY DIGITAL INPUTS

Customer: EMPRESARIOS AGRUPADOS
C/Magallanes, 3
28015 MADRID
91 3098000
http://www.empresariosagrupados.es/

= E1
+ TMA-AZ-CS-CBT-0001

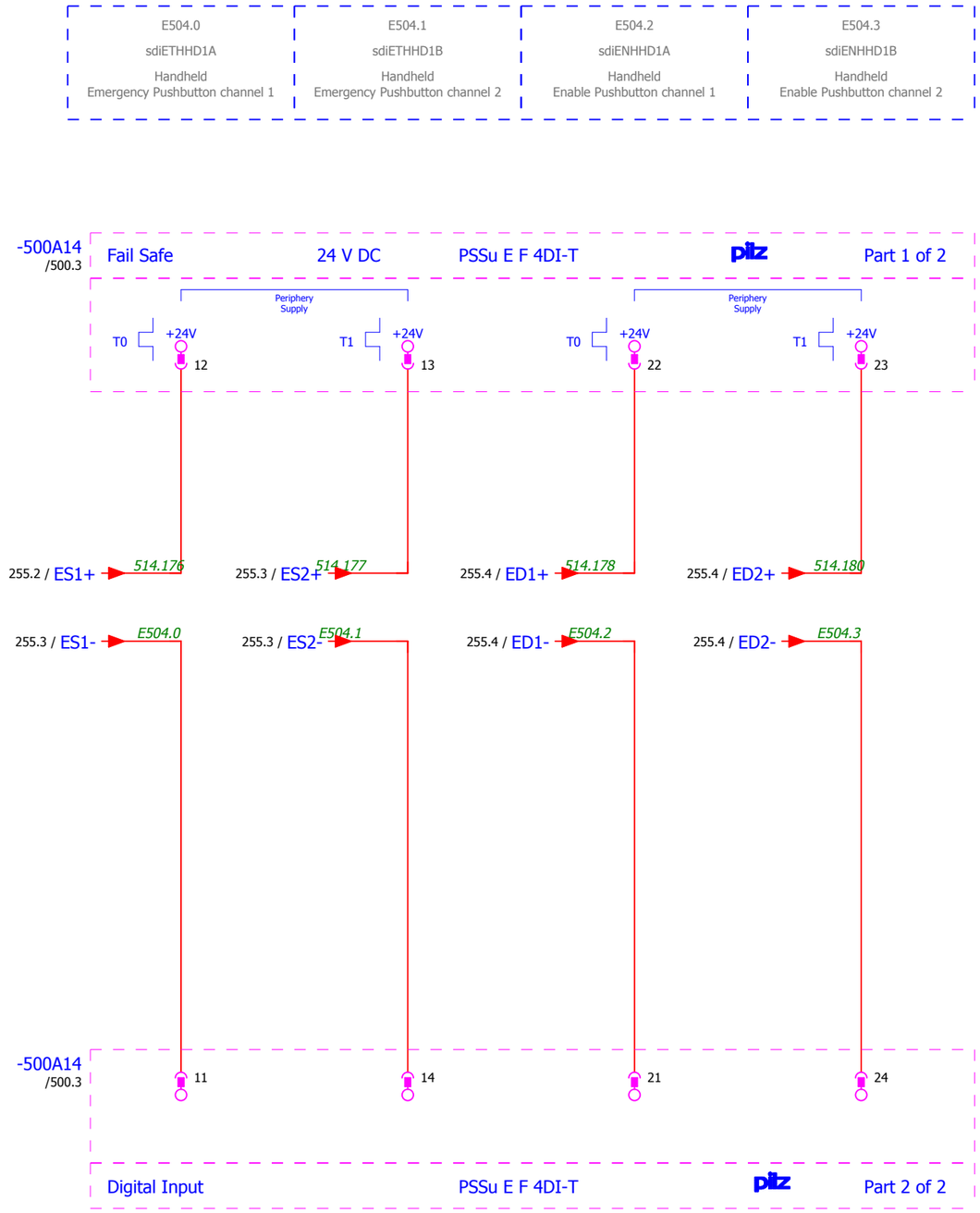

IK4 TEKNIKER Research Alliance

IK4-TEKNIKER
AVDA. OTAOLA 20
20600 Eibar (Gipuzkoa) Spain
Tfno.:(+34) 943 206744
Fax: (+34) 943 202757
Web: www.tekniker.es

Date	14/12/2017						
Reviewed	F.LÓPEZ	2.3	15/12/2017	JOSE MANUEL			
Drew by	JOSE MANUEL	Review	Date	Name	Review	Date	Name

3151_LSST

MCS Design Electrical Schematics

LSST TELESCOPE

Replaces

Replaced by

SAFETY DIGITAL INPUTS

Customer:

EMPRESARIOS AGRUPADOS

C/Magallanes, 3
28015 MADRID
91 3098000

http://www.empresariosagrupados.es/

= E1

+ TMA-AZ-CS-CBT-0001

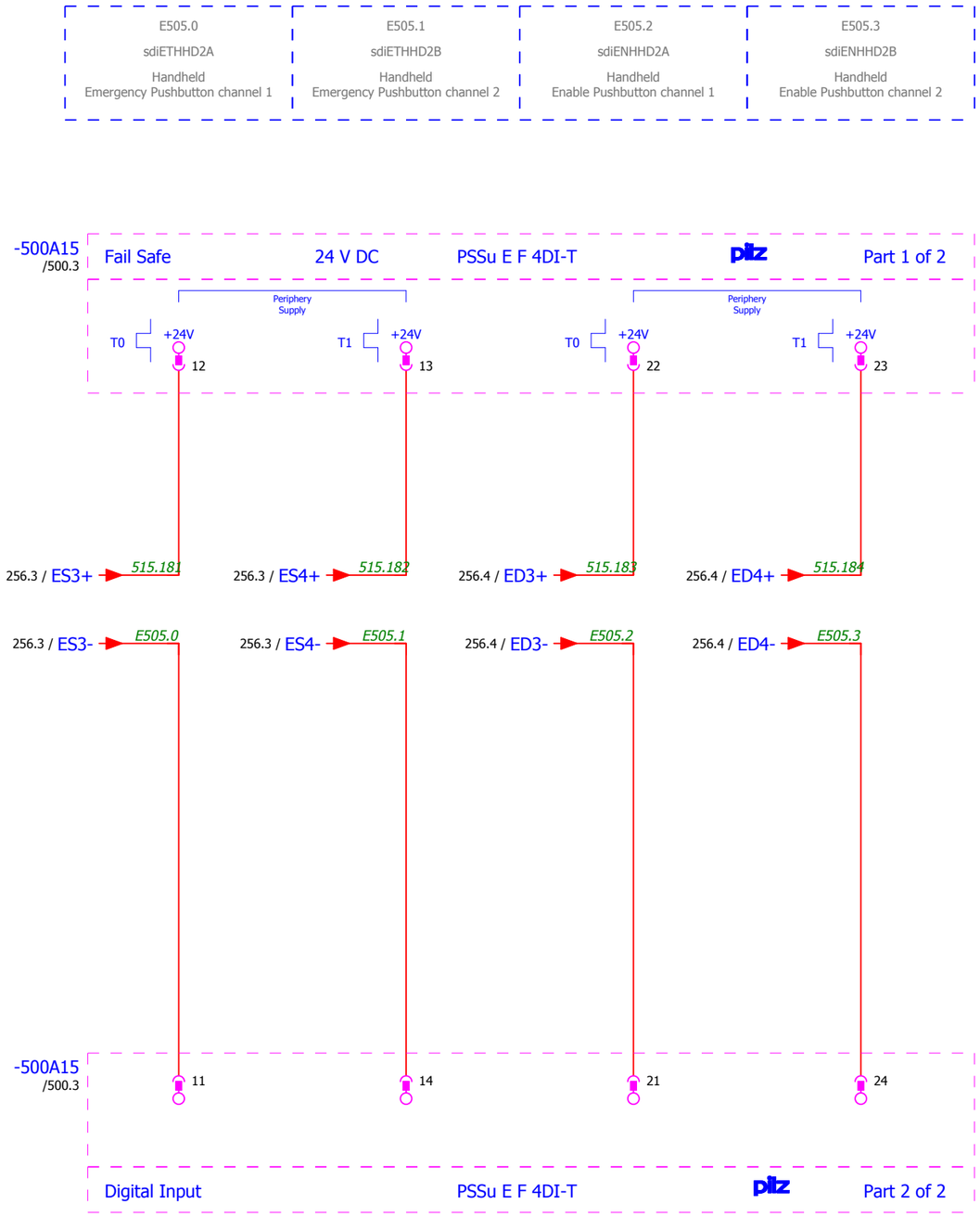

IK4-TEKNIKER
AVDA. OTAOLA 20
20600 Eibar (Gipuzkoa) Spain
Tfno.:(+34) 943 206744
Fax: (+34) 943 202757
Web: www.tekniker.es

Date	14/12/2017						
Reviewed	F.LÓPEZ	2.3	15/12/2017	JOSE MANUEL			
Drew by	JOSE MANUEL	Review	Date	Name	Review	Date	Name

3151_LSST

MCS Design Electrical Schematics

LSST TELESCOPE

Replaces

Replaced by

SAFETY DIGITAL INPUTS

Customer: EMPRESARIOS AGRUPADOS
C/Magallanes, 3
28015 MADRID
91 3098000
http://www.empresariosagrupados.es/

= E1

+ TMA-AZ-CS-CBT-0001

Page 515
Total number 710

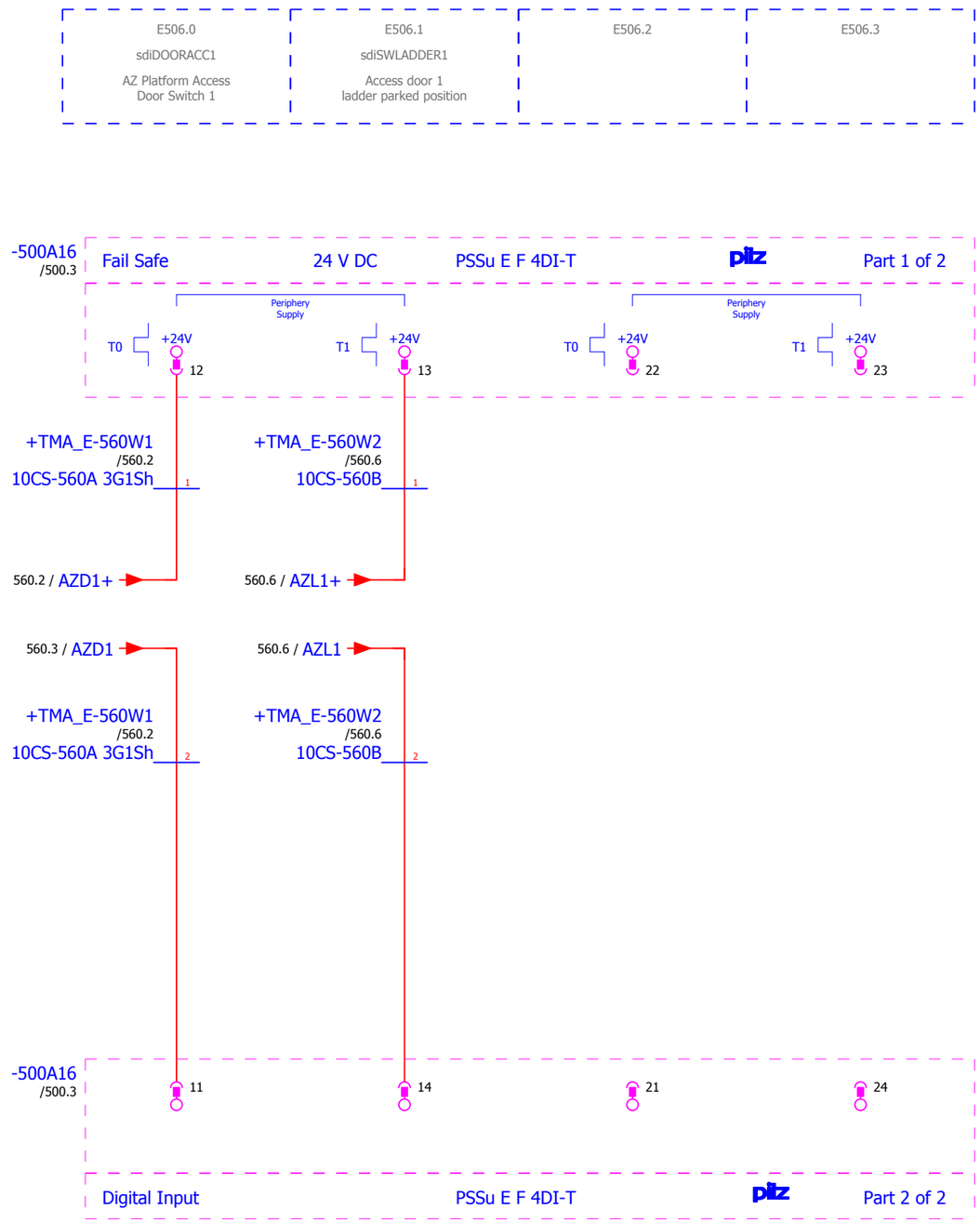

IK4 TEKNIKER Research Alliance
IK4-TEKNIKER
AVDA. OTAOLA 20
20600 Eibar (Gipuzkoa) Spain
Tfno.:(+34) 943 206744
Fax: (+34) 943 202757
Web: www.tekniker.es

Date	15/12/2017						
Reviewed	F.LÓPEZ	2.3	15/12/2017	JOSE MANUEL			
Drew by	JOSE MANUEL	Review	Date	Name	Review	Date	Name

3151_LSST
MCS Design Electrical Schematics
LSST TELESCOPE

Replaces | Replaced by

SAFETY DIGITAL INPUTS

Customer: EMPRESARIOS AGRUPADOS
C/Magallanes, 3
28015 MADRID
91 3098000
http://www.empresariosagrupados.es/

= E1
+ TMA-AZ-CS-CBT-0001

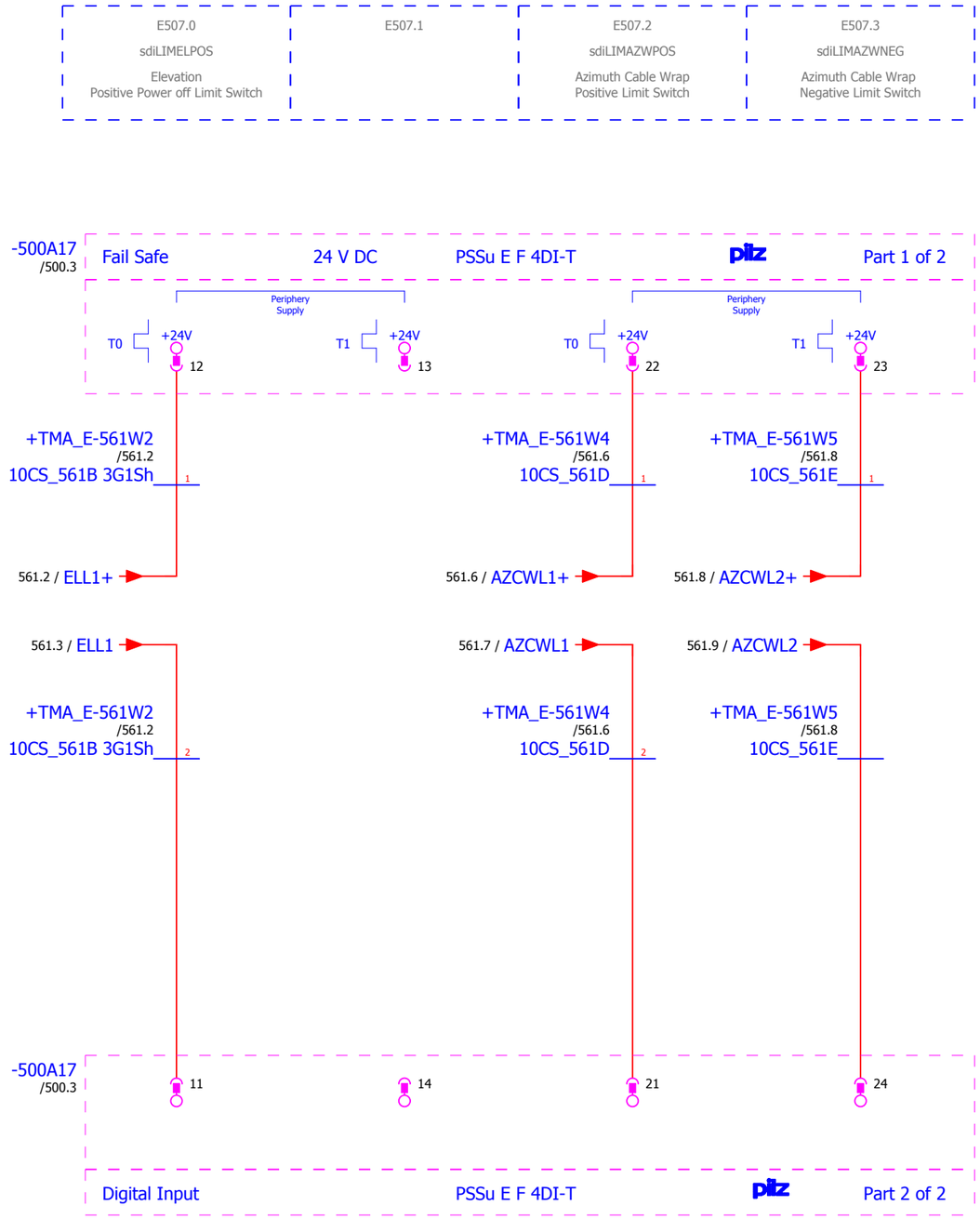

IK4 TEKNIKER Research Alliance
IK4-TEKNIKER
AVDA. OTAOLA 20
20600 Eibar (Gipuzkoa) Spain
Tfno.:(+34) 943 206744
Fax: (+34) 943 202757
Web: www.tekniker.es

Date	15/12/2017						
Reviewed	F.LÓPEZ	2.3	15/12/2017	JOSE MANUEL			
Drew by	JOSE MANUEL	Review	Date	Name	Review	Date	Name

3151_LSST
MCS Design Electrical Schematics
LSST TELESCOPE

Replaces | Replaced by

SAFETY DIGITAL INPUTS

Customer: EMPRESARIOS AGRUPADOS
C/Magallanes, 3
28015 MADRID
91 3098000
http://www.empresariosagrupados.es/

= E1
+ TMA-AZ-CS-CBT-0001

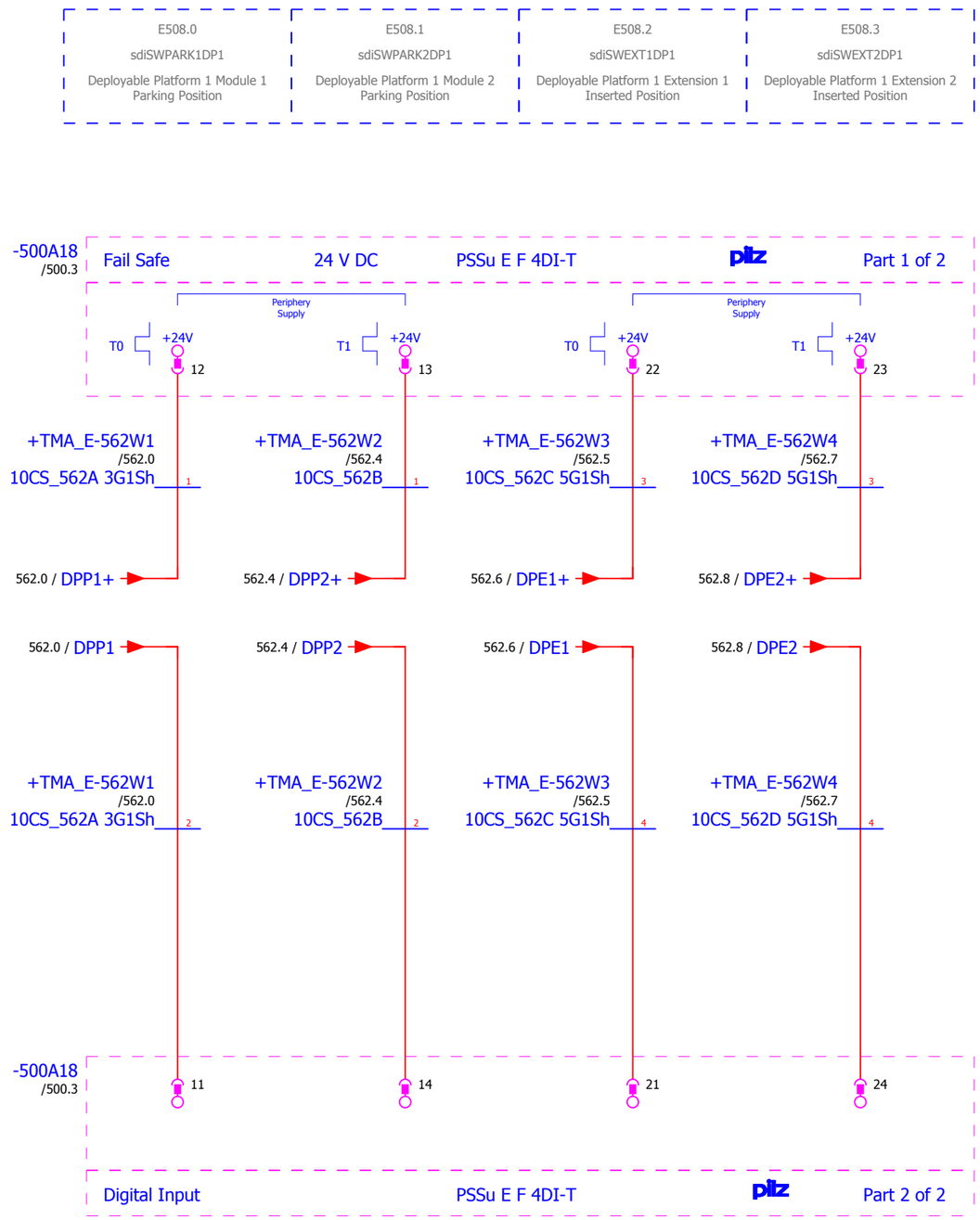

IK4 TEKNIKER Research Alliance

IK4-TEKNIKER
AVDA. OTAOLA 20
20600 Eibar (Gipuzkoa) Spain
Tfno.:(+34) 943 206744
Fax: (+34) 943 202757
Web: www.tekniker.es

Date	15/12/2017						
Reviewed	F.LÓPEZ	2.3	15/12/2017	JOSE MANUEL			
Drew by	JOSE MANUEL	Review	Date	Name	Review	Date	Name

3151_LSST

MCS Design Electrical Schematics

LSST TELESCOPE

Replaces | Replaced by

SAFETY DIGITAL INPUTS

Customer: EMPRESARIOS AGRUPADOS
C/Magallanes, 3
28015 MADRID
91 3098000
http://www.empresariosagrupados.es/

= E1

+ TMA-AZ-CS-CBT-0001

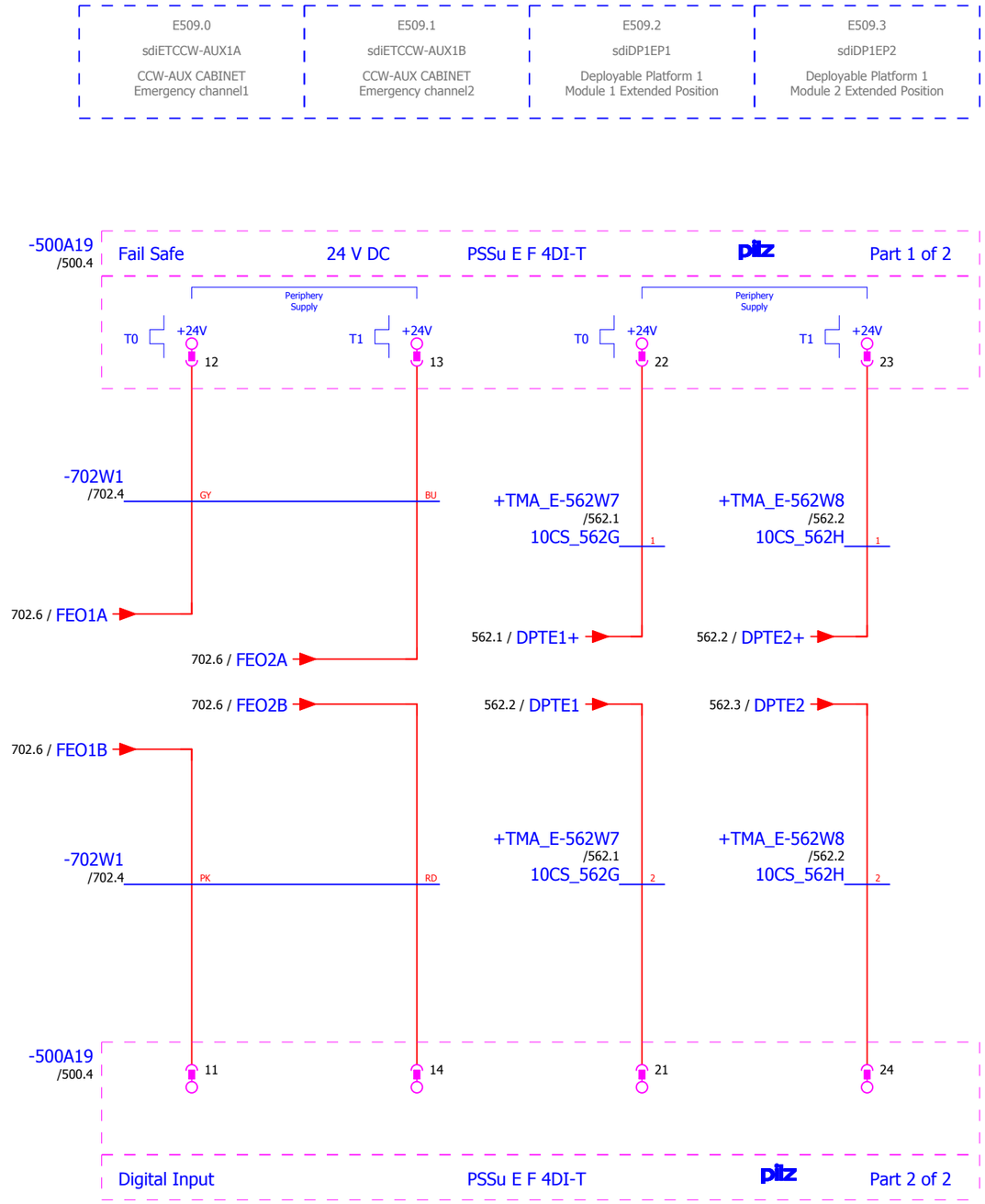

IK4 TEKNIKER Research Alliance

IK4-TEKNIKER
AVDA. OTAOLA 20
20600 Eibar (Gipuzkoa) Spain
Tfno.:(+34) 943 206744
Fax: (+34) 943 202757
Web: www.tekniker.es

Date	15/12/2017						
Reviewed	F.LÓPEZ	2.3	15/12/2017	JOSE MANUEL			
Drew by	JOSE MANUEL	Review	Date	Name	Review	Date	Name

3151_LSST

MCS Design Electrical Schematics

LSST TELESCOPE

Replaces | Replaced by

SAFETY DIGITAL INPUTS

Customer: EMPRESARIOS AGRUPADOS

C/Magallanes, 3
28015 MADRID
91 3098000
http://www.empresariosagrupados.es/

= E1

+ TMA-AZ-CS-CBT-0001

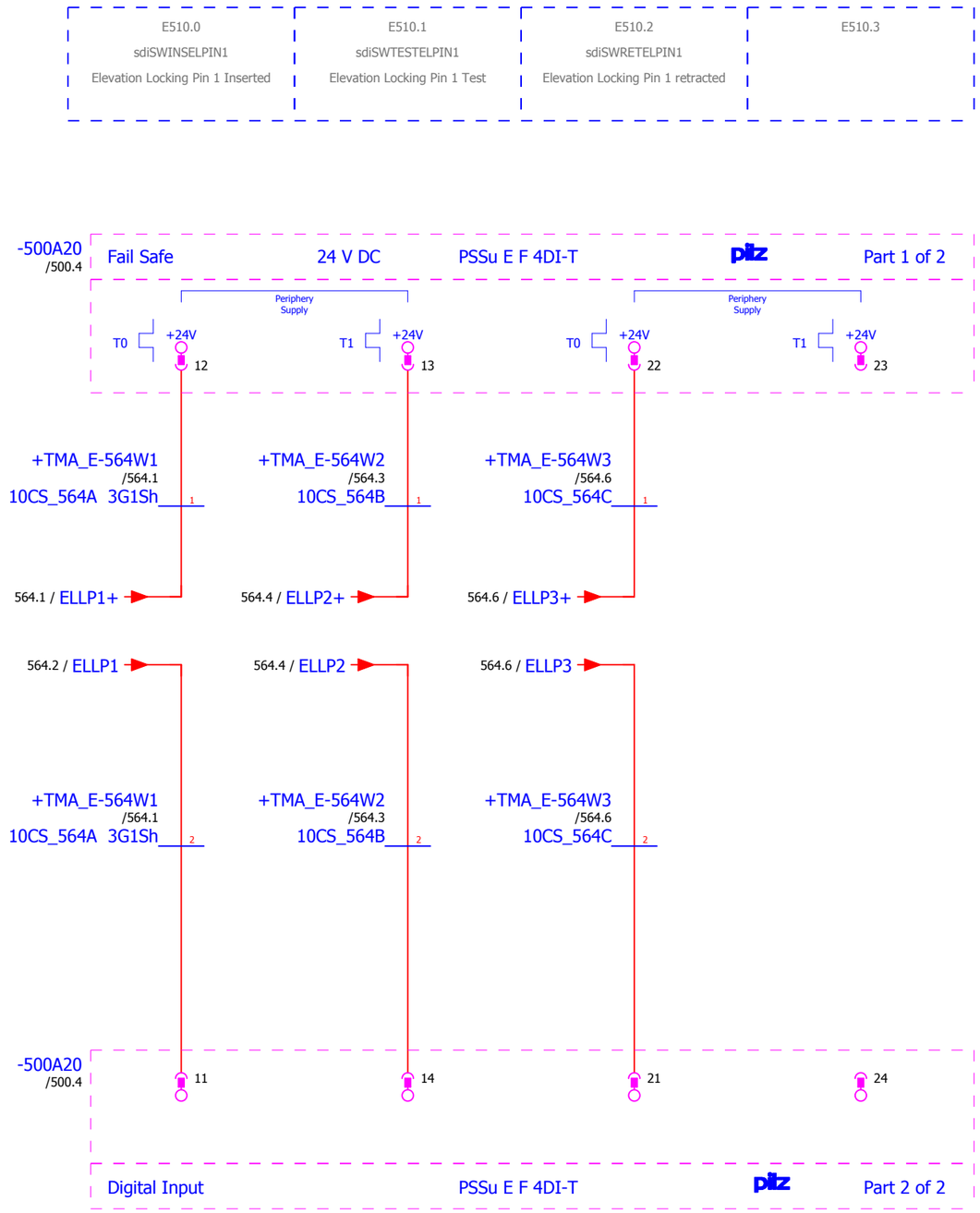

IK4 TEKNIKER Research Alliance
IK4-TEKNIKER
AVDA. OTAOLA 20
20600 Eibar (Gipuzkoa) Spain
Tfno.:(+34) 943 206744
Fax: (+34) 943 202757
Web: www.tekniker.es

Date	15/12/2017						
Reviewed	F.LÓPEZ	2.3	15/12/2017	JOSE MANUEL			
Drew by	JOSE MANUEL	Review	Date	Name	Review	Date	Name

3151_LSST
MCS Design Electrical Schematics
LSST TELESCOPE

Replaces | Replaced by

SAFETY DIGITAL INPUTS

Customer: EMPRESARIOS AGRUPADOS
C/Magallanes, 3
28015 MADRID
91 3098000
http://www.empresariosagrupados.es/

= E1
+ TMA-AZ-CS-CBT-0001

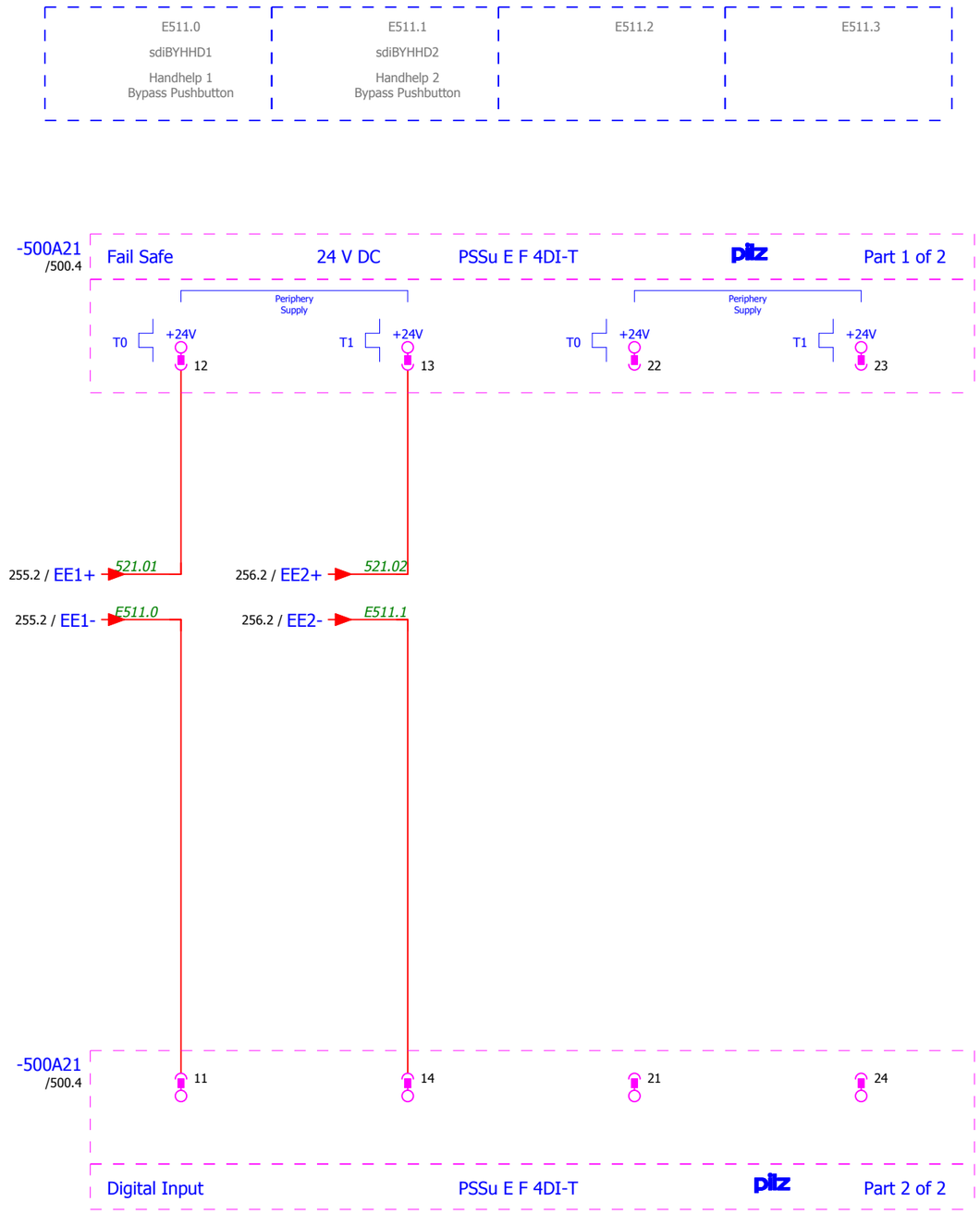

IK4-TEKNIKER
AVDA. OTAOLA 20
20600 Eibar (Gipuzkoa) Spain
Tfno.:(+34) 943 206744
Fax: (+34) 943 202757
Web: www.tekniker.es

Date	14/12/2017						
Reviewed	F.LÓPEZ	2.3	15/12/2017	JOSE MANUEL			
Drew by	JOSE MANUEL	Review	Date	Name	Review	Date	Name

3151_LSST
MCS Design Electrical Schematics
LSST TELESCOPE
Replaces
Replaced by

SAFETY DIGITAL INPUTS

Customer:
EMPRESARIOS AGRUPADOS
C/Magallanes, 3
28015 MADRID
91 3098000
http://www.empresariosagrupados.es/

= E1
+ TMA-AZ-CS-CBT-0001

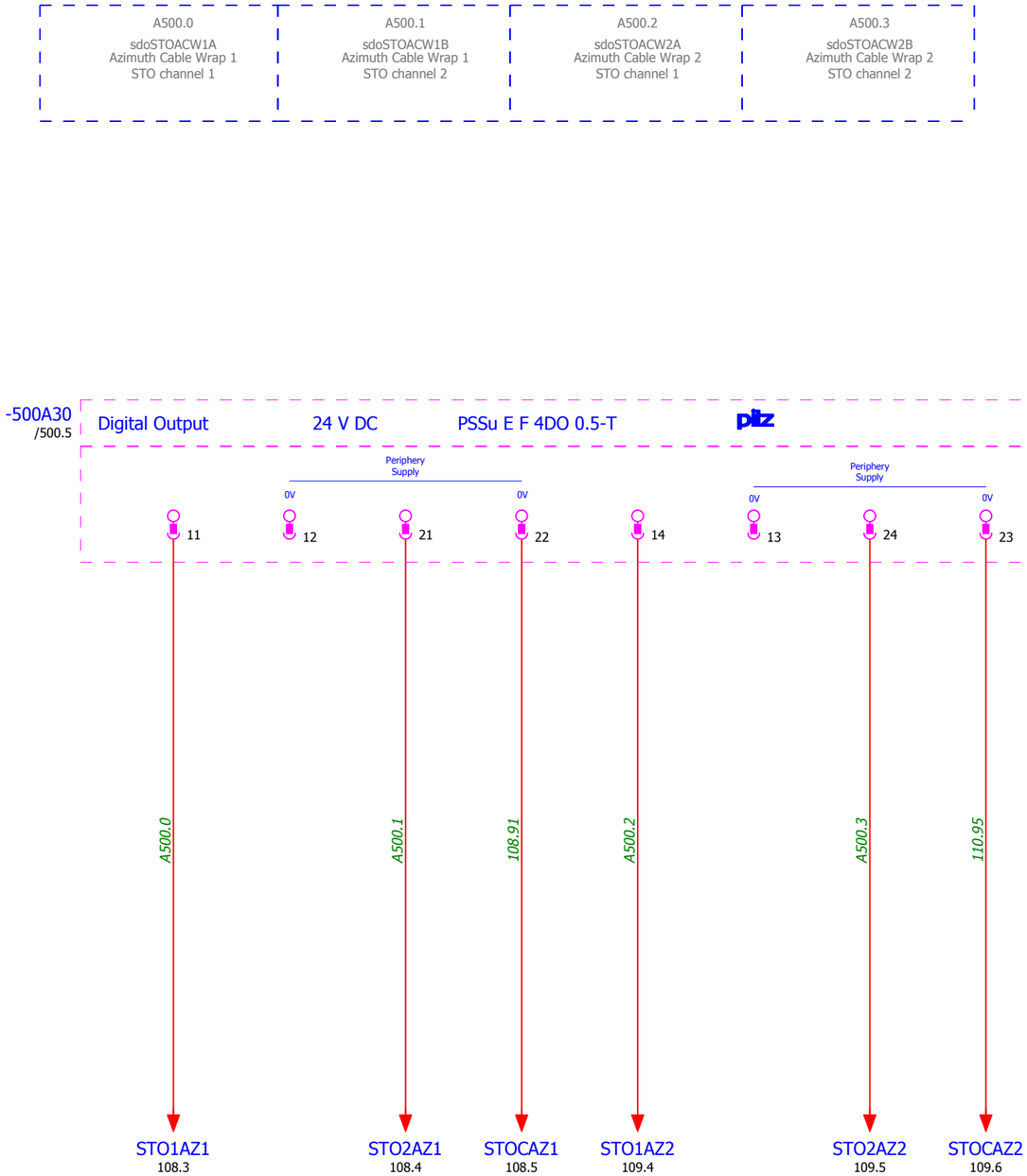

IK4 TEKNIKER Research Alliance
IK4-TEKNIKER
AVDA. OTAOLA 20
20600 Eibar (Gipuzkoa) Spain
Tfno.:(+34) 943 206744
Fax: (+34) 943 202757
Web: www.tekniker.es

Date	14/12/2017						
Reviewed	F.LÓPEZ	2.3	15/12/2017	JOSE MANUEL			
Drew by	JOSE MANUEL	Review	Date	Name	Review	Date	Name

3151_LSST
MCS Design Electrical Schematics
LSST TELESCOPE

Replaces | Replaced by

SAFETY DIGITAL OUTPUTS

Customer: EMPRESARIOS AGRUPADOS
C/Magallanes, 3
28015 MADRID
91 3098000
http://www.empresariosagrupados.es/

= E1
+ TMA-AZ-CS-CBT-0001

A501.0	A501.1	A501.2	A501.3
sdoSTOCCW1A	sdoSTOCCW1B	sdoSTOCCW2A	sdoSTOCCW2B
Camera Cable Wrap 1 STO channel 1	Camera Cable Wrap 1 STO channel 2	Camera Cable Wrap 2 STO channel 1	Camera Cable Wrap 2 STO channel 2

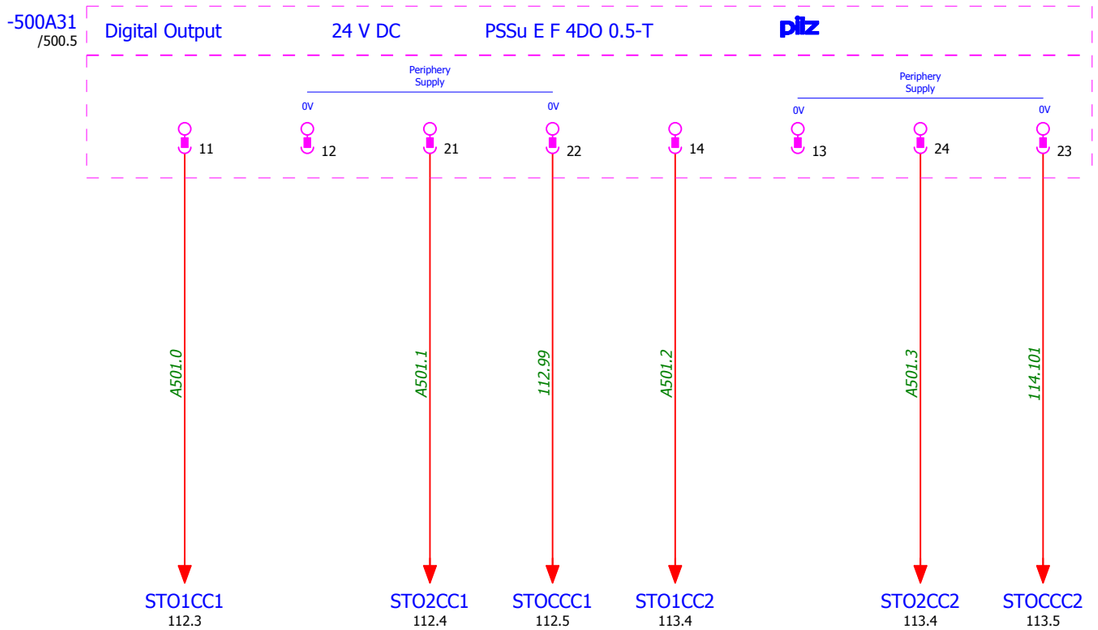

IK4-TEKNIKER
AVDA. OTAOLA 20
20600 Eibar (Gipuzkoa) Spain
Tfno.:(+34) 943 206744
Fax: (+34) 943 202757
Web: www.tekniker.es

Date	28/11/2017						
Reviewed	F.LÓPEZ	2.3	15/12/2017	JOSE MANUEL			
Drew by	JOSE MANUEL	Review	Date	Name	Review	Date	Name

3151_LSST
MCS Design Electrical Schematics
LSST TELESCOPE
Replaces
Replaced by

SAFETY DIGITAL OUTPUTS

Customer: EMPRESARIOS AGRUPADOS
C/Magallanes, 3
28015 MADRID
91 3098000
http://www.empresariosagrupados.es/

= E1
+ TMA-AZ-CS-CBT-0001

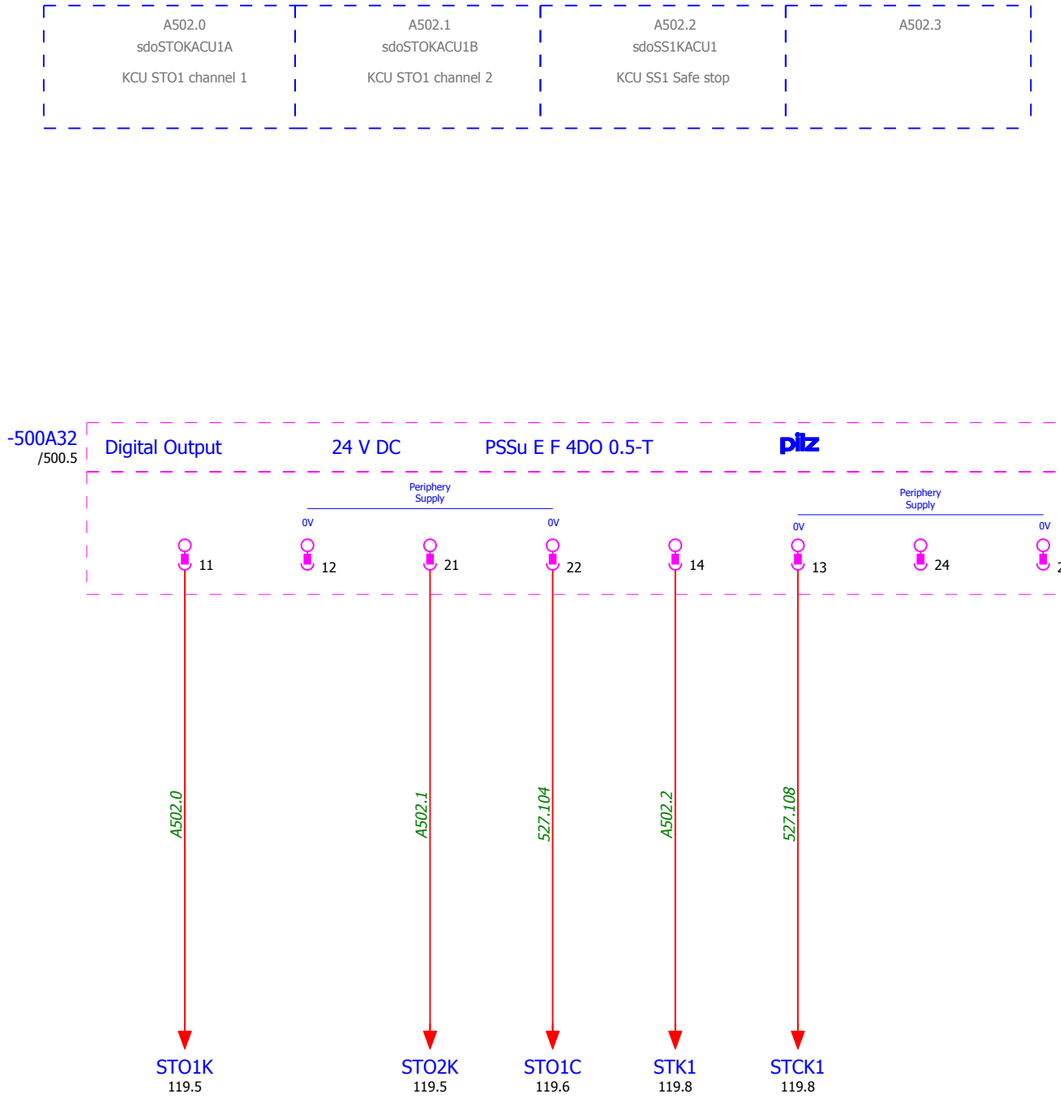

IK4 TEKNIKER Research Alliance
IK4-TEKNIKER
AVDA. OTAOLA 20
20600 Eibar (Gipuzkoa) Spain
Tfno.:(+34) 943 206744
Fax: (+34) 943 202757
Web: www.tekniker.es

Date	28/11/2017						
Reviewed	F.LÓPEZ	2.3	15/12/2017	JOSE MANUEL			
Drew by	JOSE MANUEL	Review	Date	Name	Review	Date	Name

3151_LSST
MCS Design Electrical Schematics
LSST TELESCOPE

Replaces | Replaced by

SAFETY DIGITAL OUTPUTS

Customer:
EMPRESARIOS AGRUPADOS
C/Magallanes, 3
28015 MADRID
91 3098000
http://www.empresariosagrupados.es/

= E1
+ TMA-AZ-CS-CBT-0001

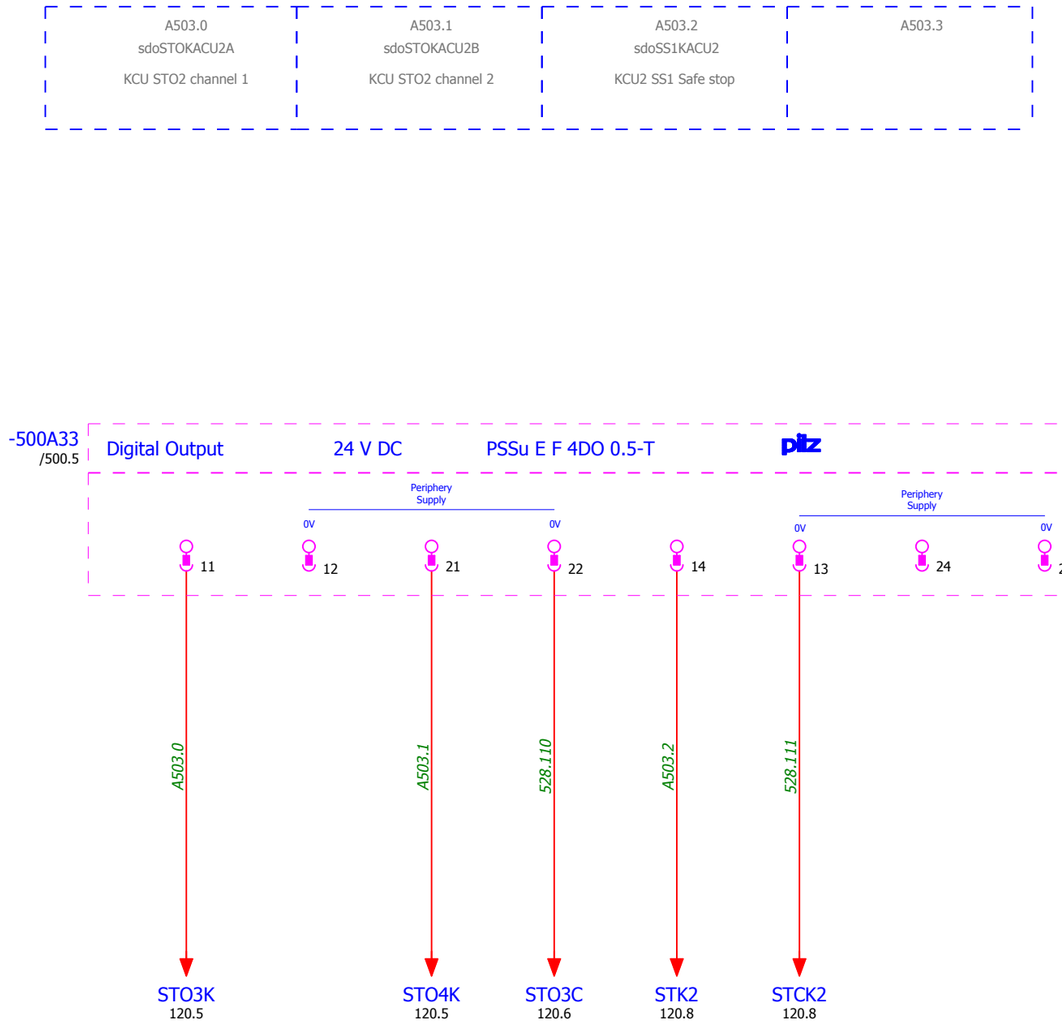

IK4 TEKNIKER Research Alliance
IK4-TEKNIKER
AVDA. OTAOLA 20
20600 Eibar (Gipuzkoa) Spain
Tfno.:(+34) 943 206744
Fax: (+34) 943 202757
Web: www.tekniker.es

Date	28/11/2017						
Reviewed	F.LÓPEZ	2.3	15/12/2017	JOSE MANUEL			
Drew by	JOSE MANUEL	Review	Date	Name	Review	Date	Name

3151_LSST
MCS Design Electrical Schematics
LSST TELESCOPE

Replaces | Replaced by

SAFETY DIGITAL OUTPUTS

Customer:
EMPRESARIOS AGRUPADOS
C/Magallanes, 3
28015 MADRID
91 3098000
http://www.empresariosagrupados.es/

= E1
+ TMA-AZ-CS-CBT-0001

A504.0	A504.1	A504.2	A504.3
sdoSS1ACW1	sdoSS1ACW2	sdoSS1CCW1	sdoSS1CCW2
Stop Azimuth Cable Wrap Drive 1	Stop Azimuth Cable Wrap Drive 2	Stop Camera Cable Wrap 1	Stop Camera Cable Wrap 2

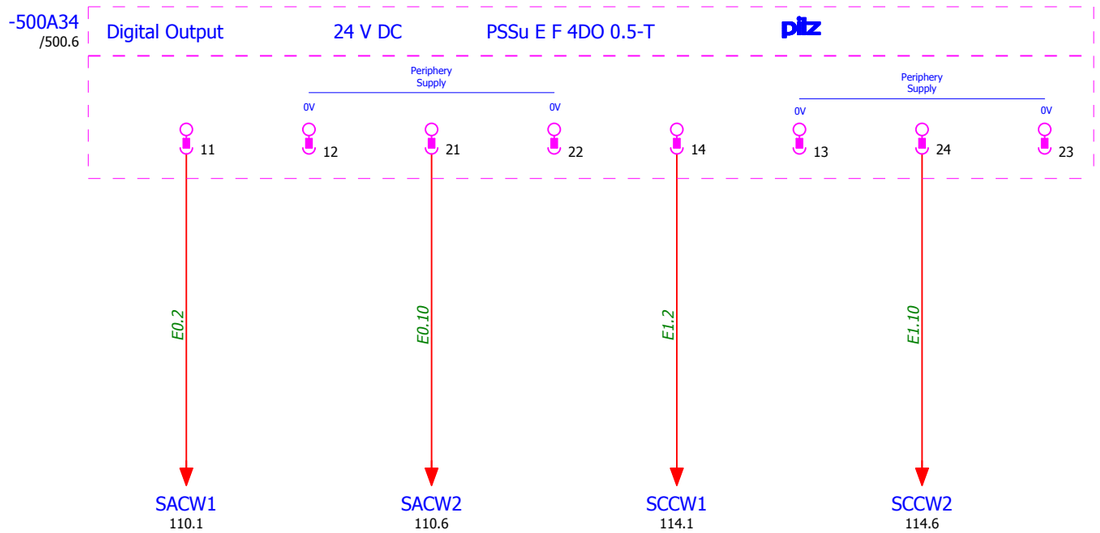

IK4 TEKNIKER Research Alliance
IK4-TEKNIKER
AVDA. OTAOLA 20
20600 Eibar (Gipuzkoa) Spain
Tfno.:(+34) 943 206744
Fax: (+34) 943 202757
Web: www.tekniker.es

Date	23/02/2017						
Reviewed	F.LÓPEZ	2.3	15/12/2017	JOSE MANUEL			
Drew by	jcastano	Review	Date	Name	Review	Date	Name

3151_LSST
MCS Design Electrical Schematics
LSST TELESCOPE
Replaces
Replaced by

SAFETY DIGITAL OUTPUTS

Customer:
EMPRESARIOS AGRUPADOS
C/Magallanes, 3
28015 MADRID
91 3098000
http://www.empresariosagrupados.es/

= E1
+ TMA-AZ-CS-CBT-0001

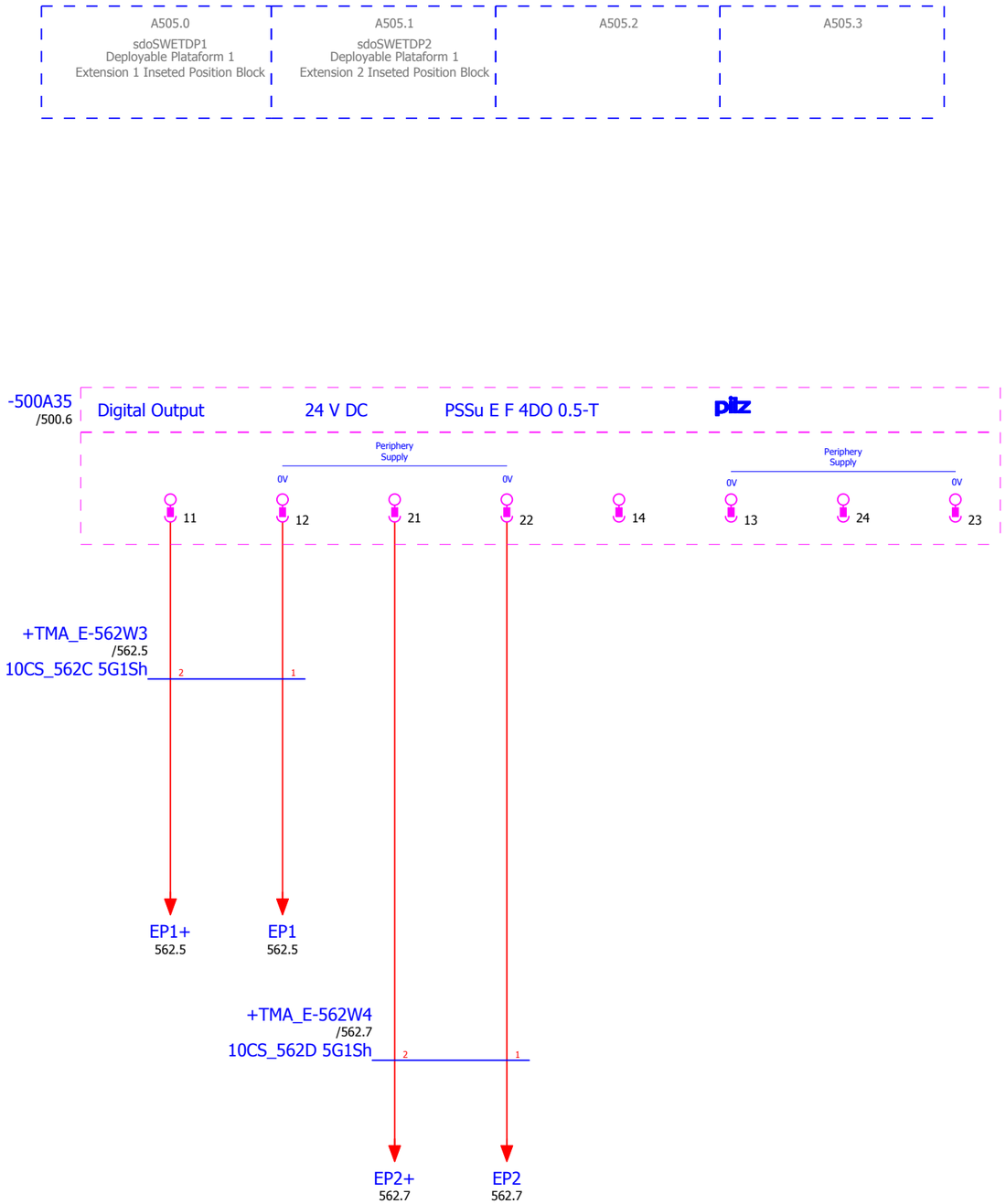

IK4 TEKNIKER Research Alliance
IK4-TEKNIKER
AVDA. OTAOLA 20
20600 Eibar (Gipuzkoa) Spain
Tfno.:(+34) 943 206744
Fax: (+34) 943 202757
Web: www.tekniker.es

Date	15/12/2017							
Reviewed	F.LÓPEZ	2.3	15/12/2017	JOSE MANUEL				
Drew by	JOSE MANUEL	Review	Date	Name	Review	Date	Name	

3151_LSST
MCS Design Electrical Schematics
LSST TELESCOPE
Replaces
Replaced by

SAFETY DIGITAL OUTPUTS

Customer:
EMPRESARIOS AGRUPADOS
C/Magallanes, 3
28015 MADRID
91 3098000
http://www.empresariosagrupados.es/

= E1
+ TMA-AZ-CS-CBT-0001

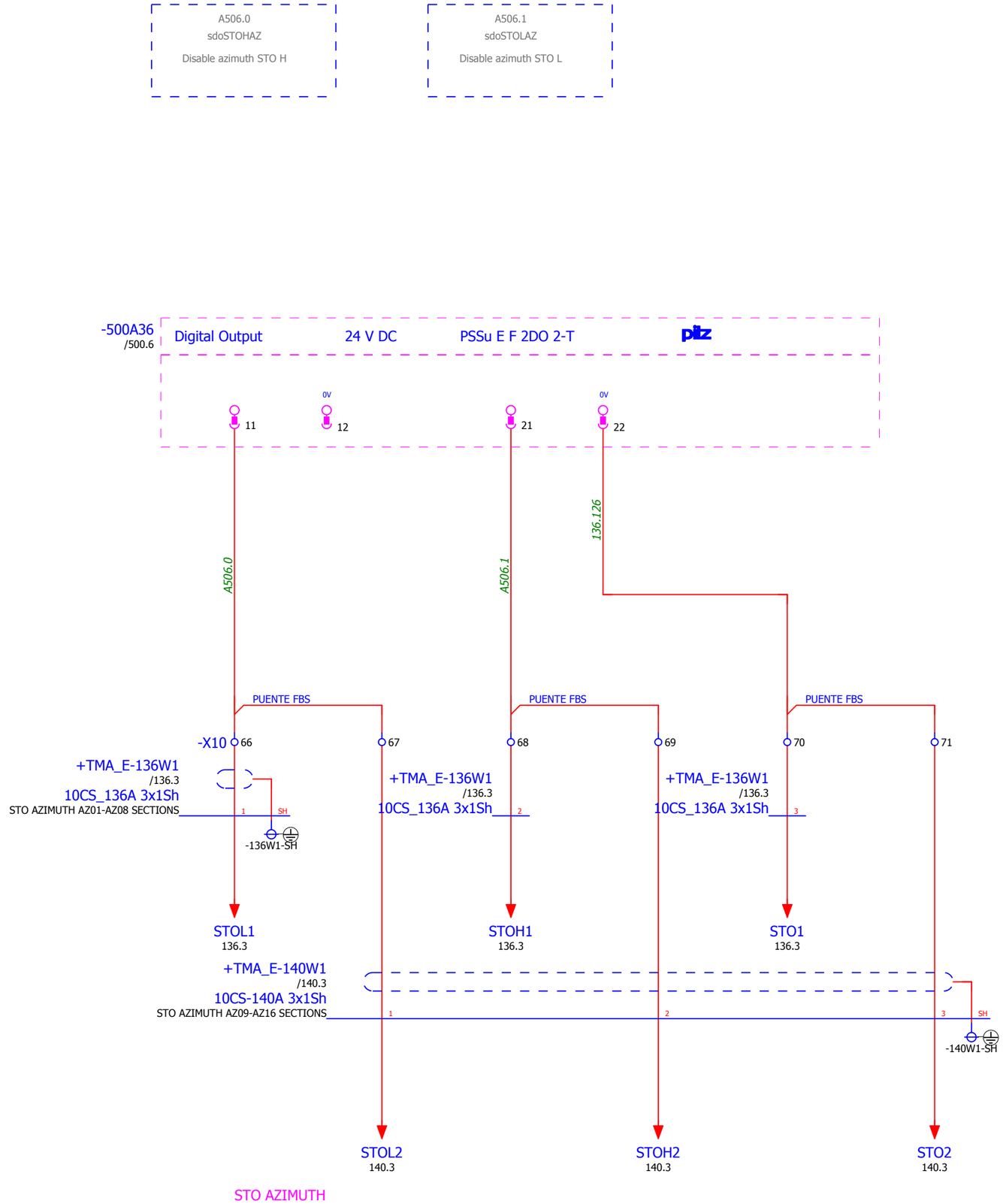

IK4 TEKNIKER Research Alliance

IK4-TEKNIKER
AVDA. OTAOLA 20
20600 Eibar (Gipuzkoa) Spain
Tfno.:(+34) 943 206744
Fax: (+34) 943 202757
Web: www.tekniker.es

Date	15/12/2017						
Reviewed	F.LÓPEZ	2.3	15/12/2017	JOSE MANUEL			
Drew by	JOSE MANUEL	Review	Date	Name	Review	Date	Name

3151_LSST

MCS Design Electrical Schematics

LSST TELESCOPE

Replaces | Replaced by

SAFETY DIGITAL OUTPUTS

Customer: EMPRESARIOS AGRUPADOS

EMPRESARIOS AGRUPADOS
C/Magallanes, 3
28015 MADRID
91 3098000
http://www.empresariosagrupados.es/

= E1

+ TMA-AZ-CS-CBT-0001

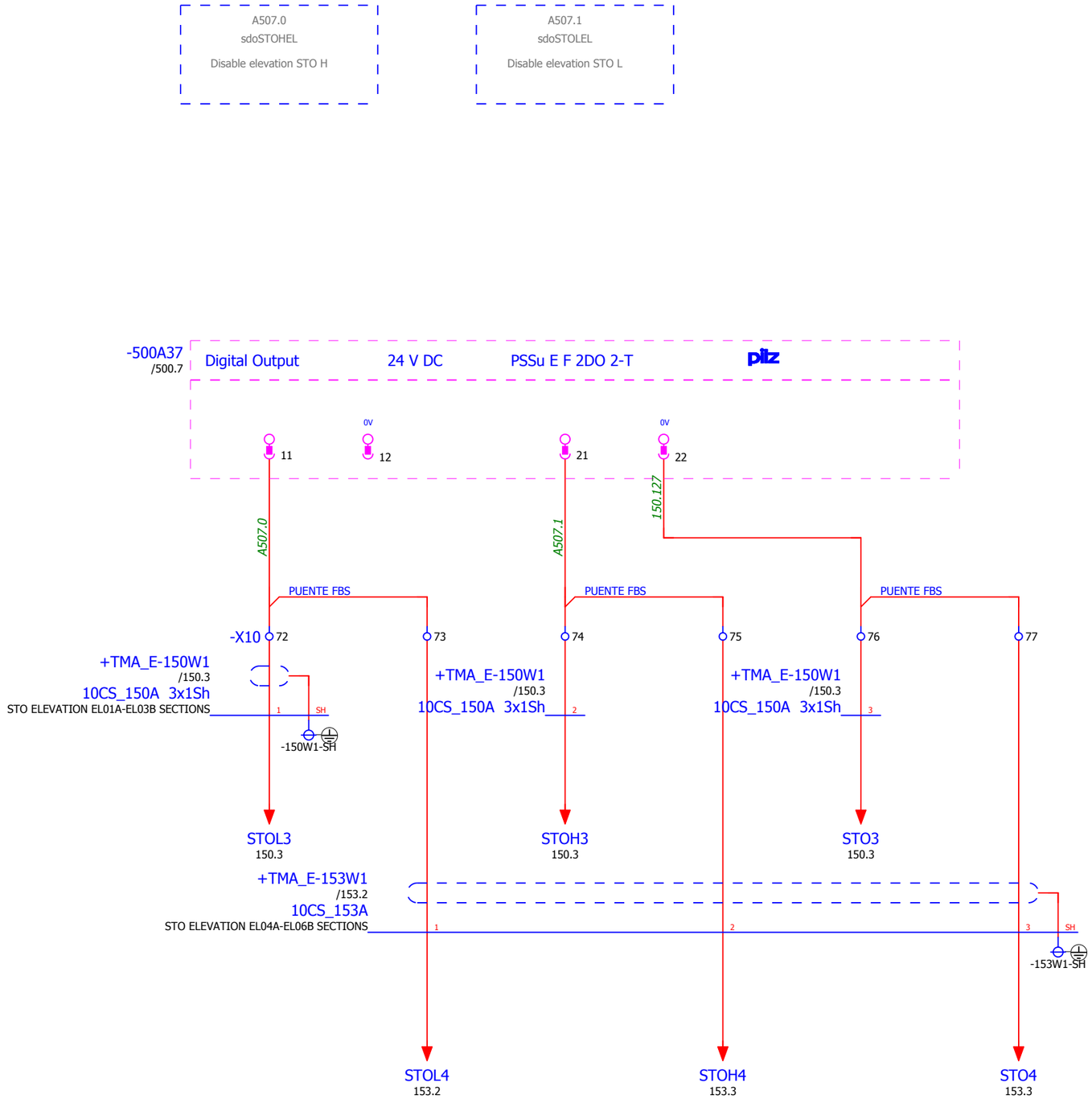

STO ELEVATION

IK4 TEKNIKER Research Alliance
IK4-TEKNIKER
AVDA. OTAOLA 20
20600 Eibar (Gipuzkoa) Spain
Tfno.:(+34) 943 206744
Fax: (+34) 943 202757
Web: www.tekniker.es

Date	15/12/2017						
Reviewed	F.LÓPEZ	2.3	15/12/2017	JOSE MANUEL			
Drew by	JOSE MANUEL	Review	Date	Name	Review	Date	Name

3151_LSST
MCS Design Electrical Schematics
LSST TELESCOPE
Replaces
Replaced by

SAFETY DIGITAL OUTPUTS

Customer:
EMPRESARIOS AGRUPADOS
C/Magallanes, 3
28015 MADRID
91 3098000
http://www.empresariosagrupados.es/

= E1
+ TMA-AZ-CS-CBT-0001

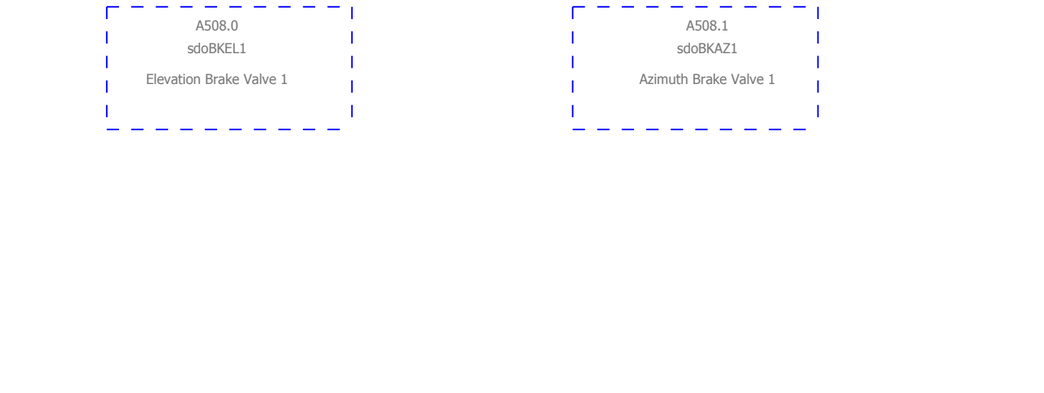

IK4 TEKNIKER Research Alliance
IK4-TEKNIKER
AVDA. OTAOLA 20
20600 Eibar (Gipuzkoa) Spain
Tfno.:(+34) 943 206744
Fax: (+34) 943 202757
Web: www.tekniker.es

Date	15/12/2017						
Reviewed	F.LÓPEZ	2.3	15/12/2017	JOSE MANUEL			
Drew by	JOSE MANUEL	Review	Date	Name	Review	Date	Name

3151_LSST
MCS Design Electrical Schematics
LSST TELESCOPE

Replaces | Replaced by

SAFETY DIGITAL OUTPUTS

Customer: EMPRESARIOS AGRUPADOS
C/Magallanes, 3
28015 MADRID
91 3098000
http://www.empresariosagrupados.es/

= E1
+ TMA-AZ-CS-CBT-0001

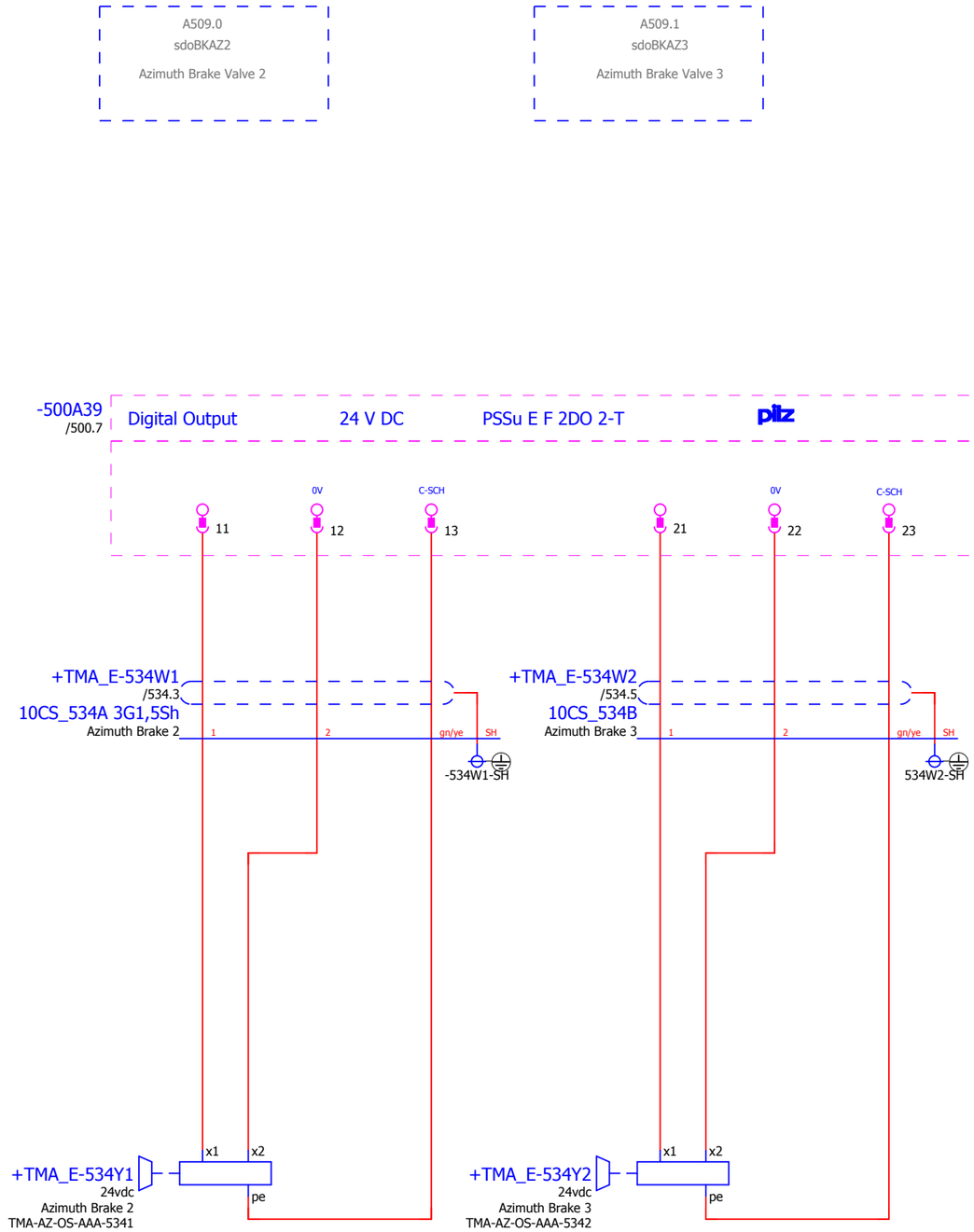

IK4 TEKNIKER Research Alliance

IK4-TEKNIKER
AVDA. OTAOLA 20
20600 Eibar (Gipuzkoa) Spain
Tfno.:(+34) 943 206744
Fax: (+34) 943 202757
Web: www.tekniker.es

Date	15/12/2017						
Reviewed	F.LÓPEZ	2.3	15/12/2017	JOSE MANUEL			
Drew by	JOSE MANUEL	Review	Date	Name	Review	Date	Name

3151_LSST

MCS Design Electrical Schematics

LSST TELESCOPE

Replaces | Replaced by

SAFETY DIGITAL OUTPUTS

Customer: EMPRESARIOS AGRUPADOS
C/Magallanes, 3
28015 MADRID
91 3098000
http://www.empresariosagrupados.es/

= E1

+ TMA-AZ-CS-CBT-0001

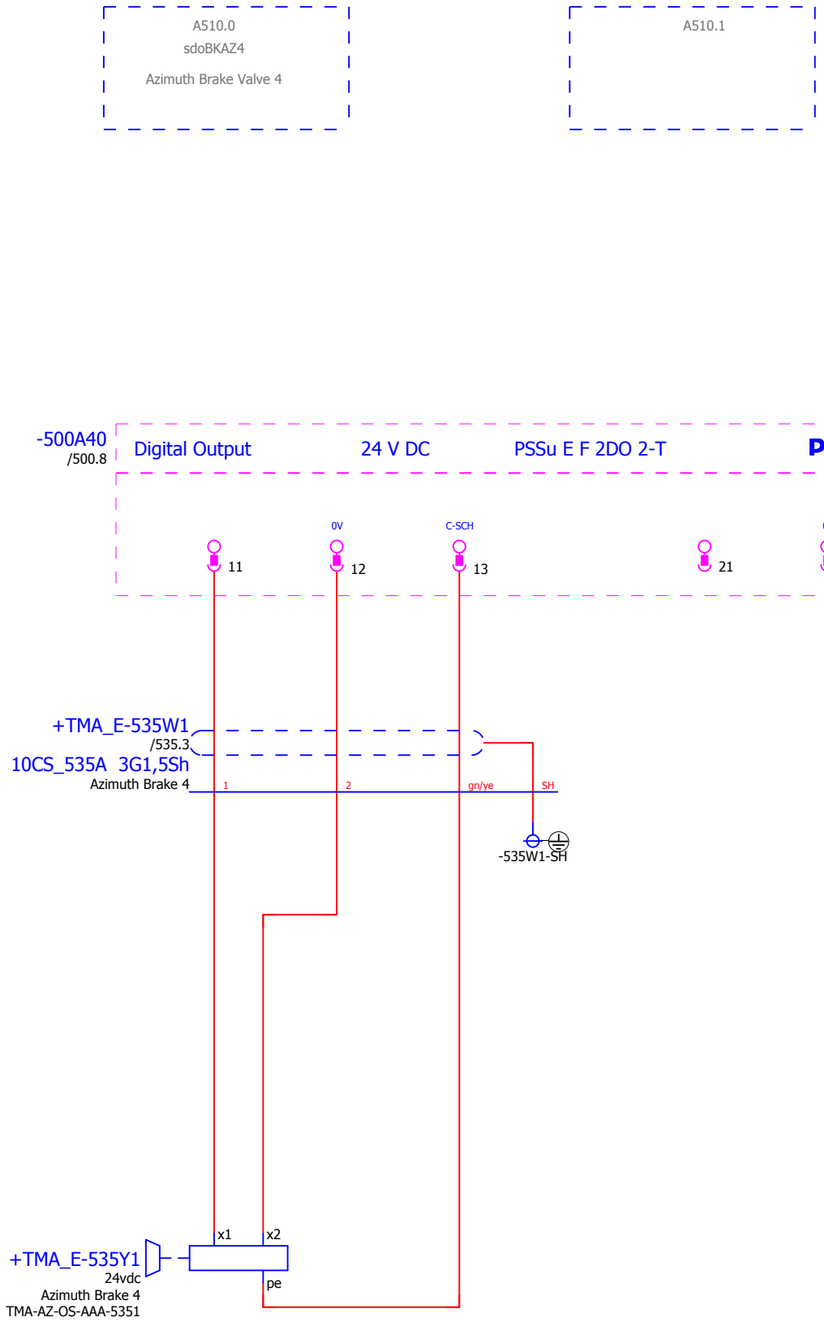

IK4 TEKNIKER Research Alliance

IK4-TEKNIKER
AVDA. OTAOLA 20
20600 Eibar (Gipuzkoa) Spain
Tfno.:(+34) 943 206744
Fax: (+34) 943 202757
Web: www.tekniker.es

Date	15/12/2017						
Reviewed	F.LÓPEZ	2.3	15/12/2017	JOSE MANUEL			
Drew by	JOSE MANUEL	Review	Date	Name	Review	Date	Name

3151_LSST

MCS Design Electrical Schematics

LSST TELESCOPE

Replaces | Replaced by

SAFETY DIGITAL OUTPUTS

Customer: EMPRESARIOS AGRUPADOS

C/Magallanes, 3
28015 MADRID
91 3098000
http://www.empresariosagrupados.es/

= E1

+ TMA-AZ-CS-CBT-0001

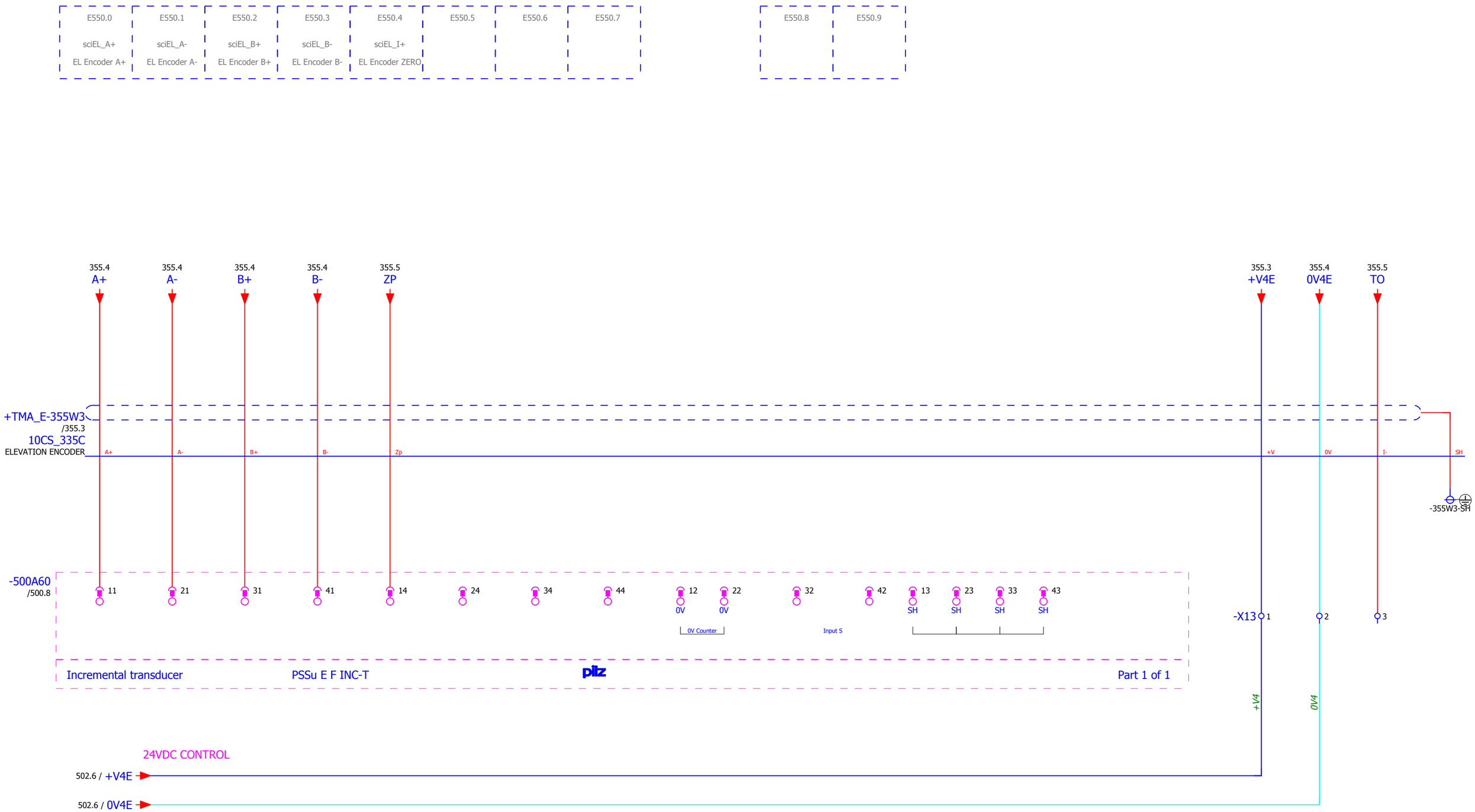

IK4 TEKNIKER Research Alliance

IK4-TEKNIKER
AVDA. OTAOLA 20
20600 Eibar (Gipuzkoa) Spain
Tfno.:(+34) 943 206744
Fax: (+34) 943 202757
Web: www.tekniker.es

Date	15/12/2017						
Reviewed	F.LÓPEZ	2.3	15/12/2017	JOSE MANUEL			
Drew by	JOSE MANUEL	Review	Date	Name	Review	Date	Name

3151_LSST

MCS Design Electrical Schematics

LSST TELESCOPE

Replaces | Replaced by

SAFETY COUNT INPUT

Customer: EMPRESARIOS AGRUPADOS

C/Magallanes, 3
28015 MADRID
91 3098000

http://www.empresariosagrupados.es/

= E1

+ TMA-AZ-CS-CBT-0001

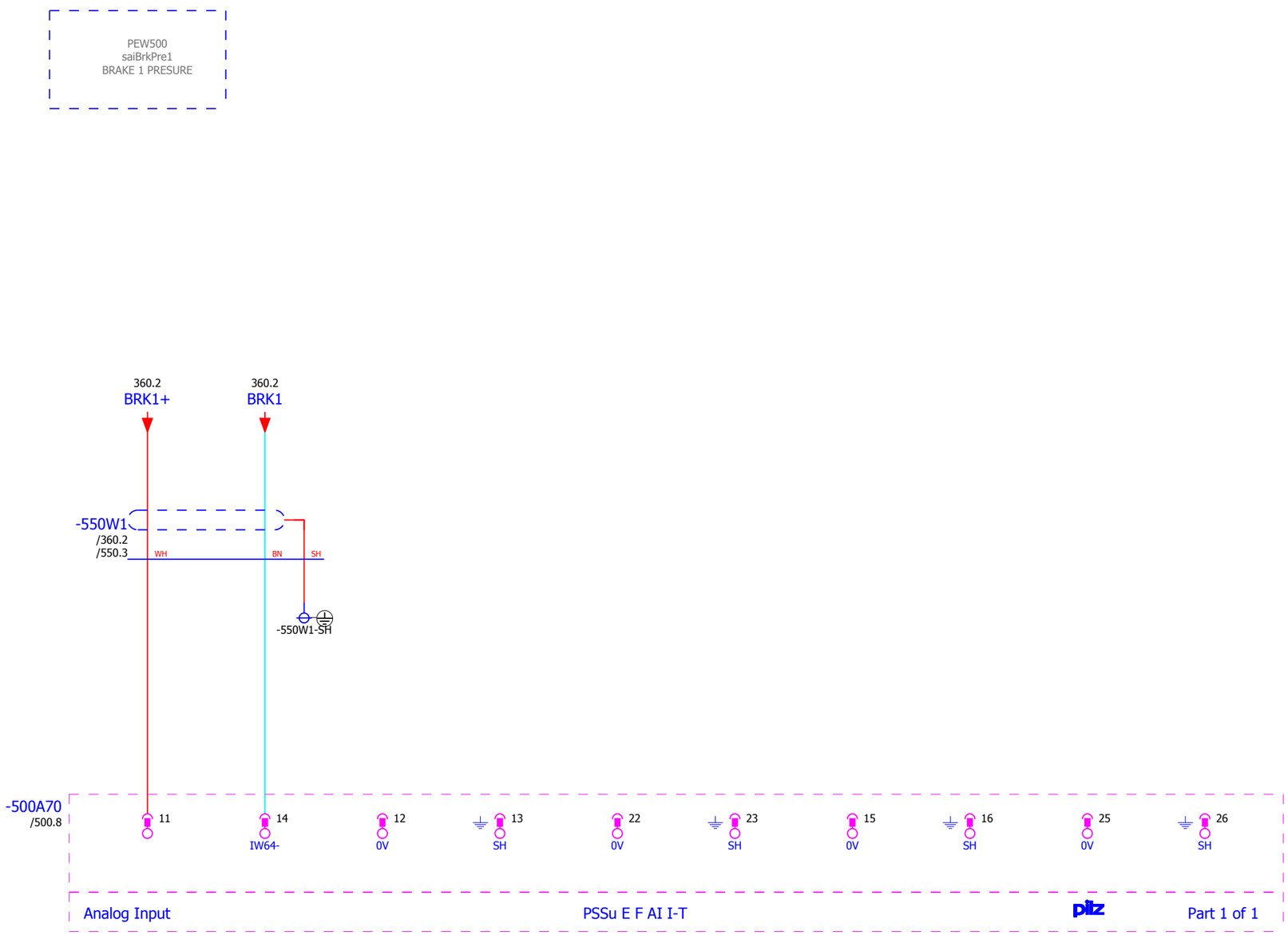

IK4 TEKNIKER Research Alliance

IK4-TEKNIKER
AVDA. OTAOLA 20
20600 Eibar (Gipuzkoa) Spain
Tfno.:(+34) 943 206744
Fax: (+34) 943 202757
Web: www.tekniker.es

Date	14/12/2017						
Reviewed	F.LÓPEZ	2.3	15/12/2017	JOSE MANUEL			
Drew by	JOSE MANUEL	Review	Date	Name	Review	Date	Name

3151_LSST

MCS Design Electrical Schematics

LSST TELESCOPE

Replaces | Replaced by

SAFETY ANALOG INPUT

Customer:
EMPRESARIOS AGRUPADOS
C/Magallanes, 3
28015 MADRID
91 3098000
http://www.empresariosagrupados.es/

= E1

+ TMA-AZ-CS-CBT-0001

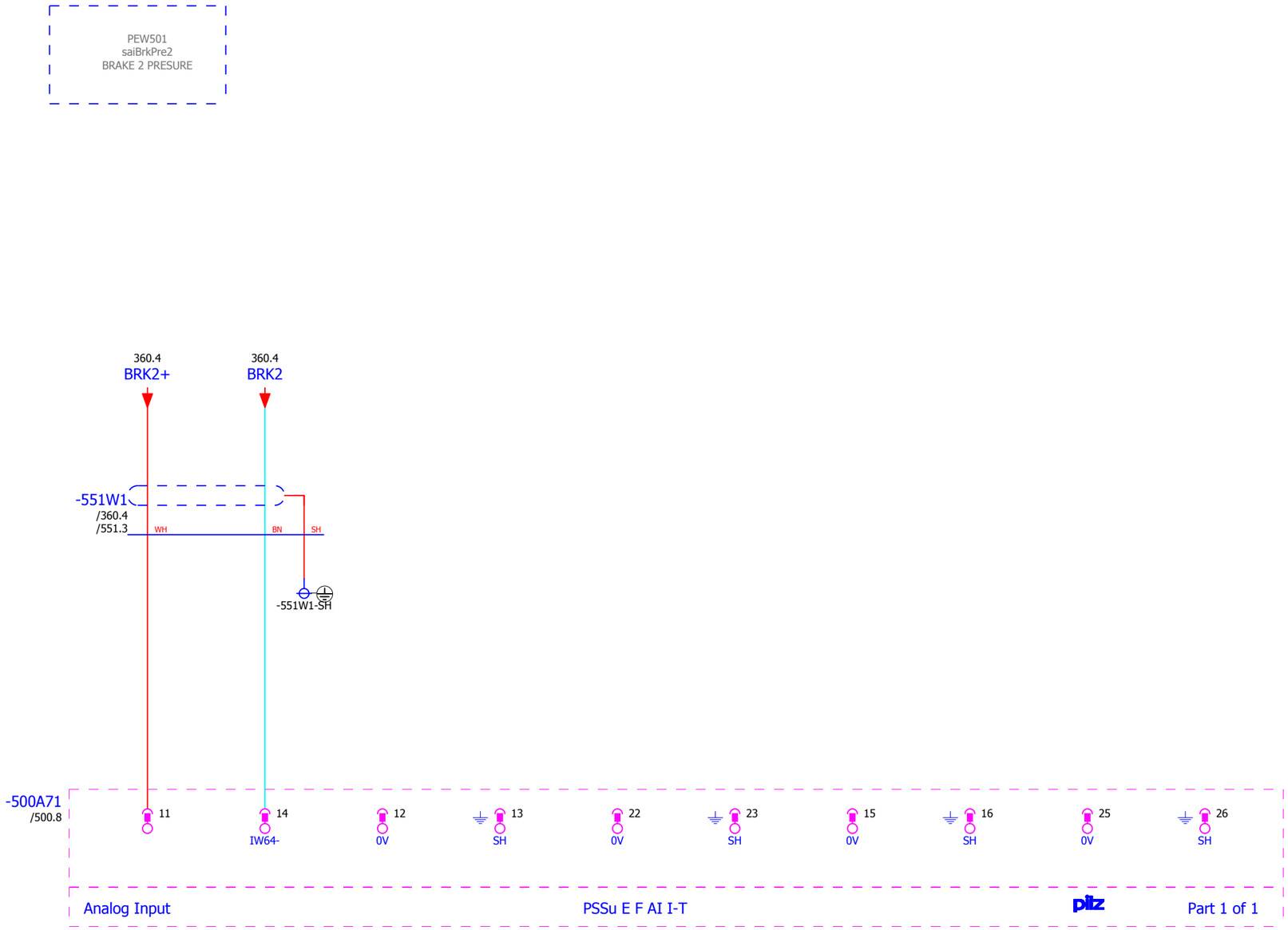

IK4 TEKNIKER Research Alliance
IK4-TEKNIKER
AVDA. OTAOLA 20
20600 Eibar (Gipuzkoa) Spain
Tfno.:(+34) 943 206744
Fax: (+34) 943 202757
Web: www.tekniker.es

Date	15/12/2017						
Reviewed	F.LÓPEZ	2.3	15/12/2017	JOSE MANUEL			
Drew by	JOSE MANUEL	Review	Date	Name	Review	Date	Name

3151_LSST
MCS Design Electrical Schematics
LSST TELESCOPE
Replaces
Replaced by

SAFETY ANALOG INPUT

Customer:
EMPRESARIOS AGRUPADOS
C/Magallanes, 3
28015 MADRID
91 3098000
http://www.empresariosagrupados.es/

= E1
+ TMA-AZ-CS-CBT-0001

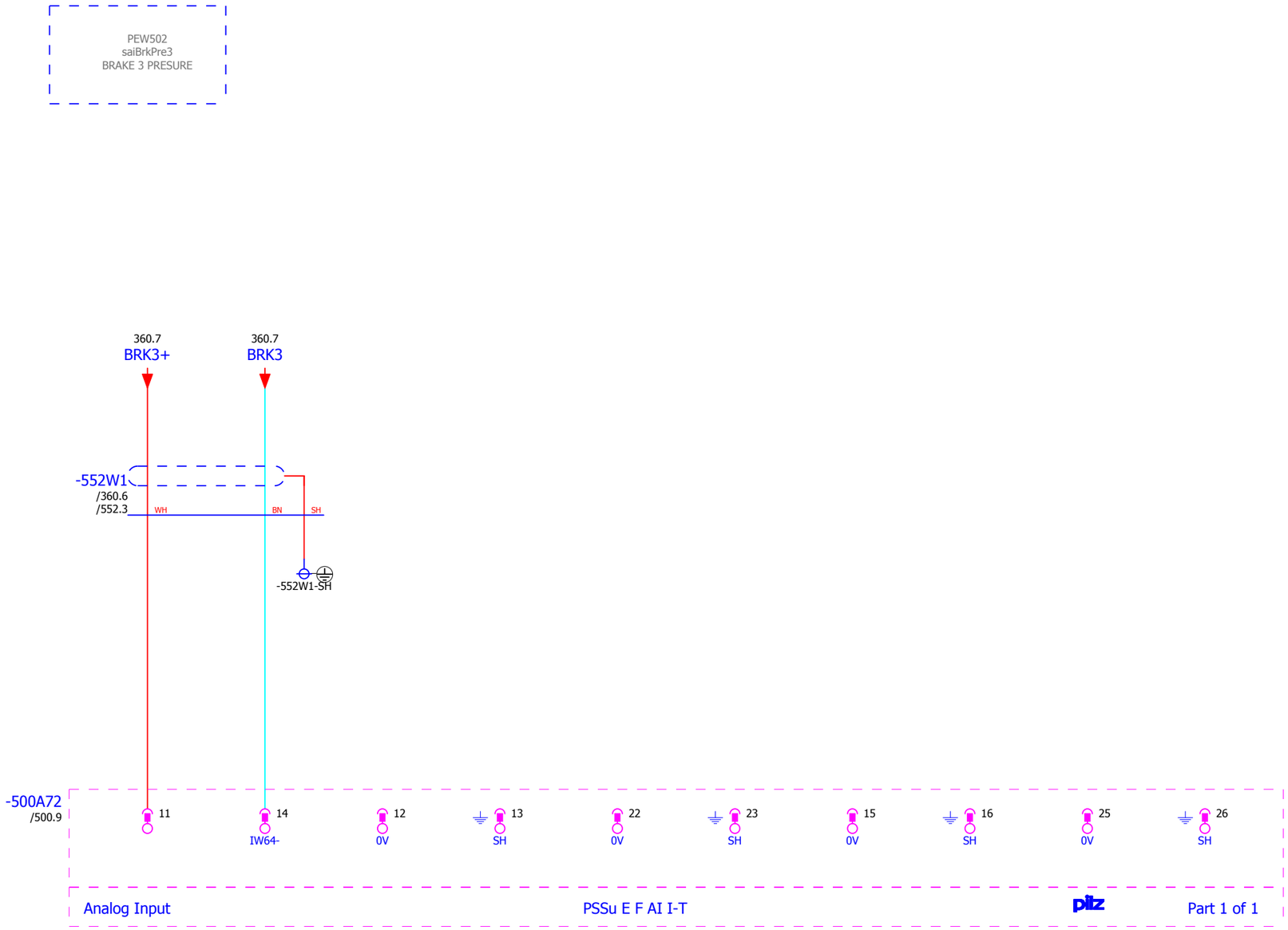

IK4 TEKNIKER Research Alliance
IK4-TEKNIKER
AVDA. OTAOLA 20
20600 Eibar (Gipuzkoa) Spain
Tfno.:(+34) 943 206744
Fax: (+34) 943 202757
Web: www.tekniker.es

Date	15/12/2017						
Reviewed	F.LÓPEZ	2.3	15/12/2017	JOSE MANUEL			
Drew by	JOSE MANUEL	Review	Date	Name	Review	Date	Name

3151_LSST
MCS Design Electrical Schematics
LSST TELESCOPE
Replaces
Replaced by

SAFETY ANALOG INPUT

Customer:
EMPRESARIOS AGRUPADOS
C/Magallanes, 3
28015 MADRID
91 3098000
http://www.empresariosagrupados.es/

= E1
+ TMA-AZ-CS-CBT-0001

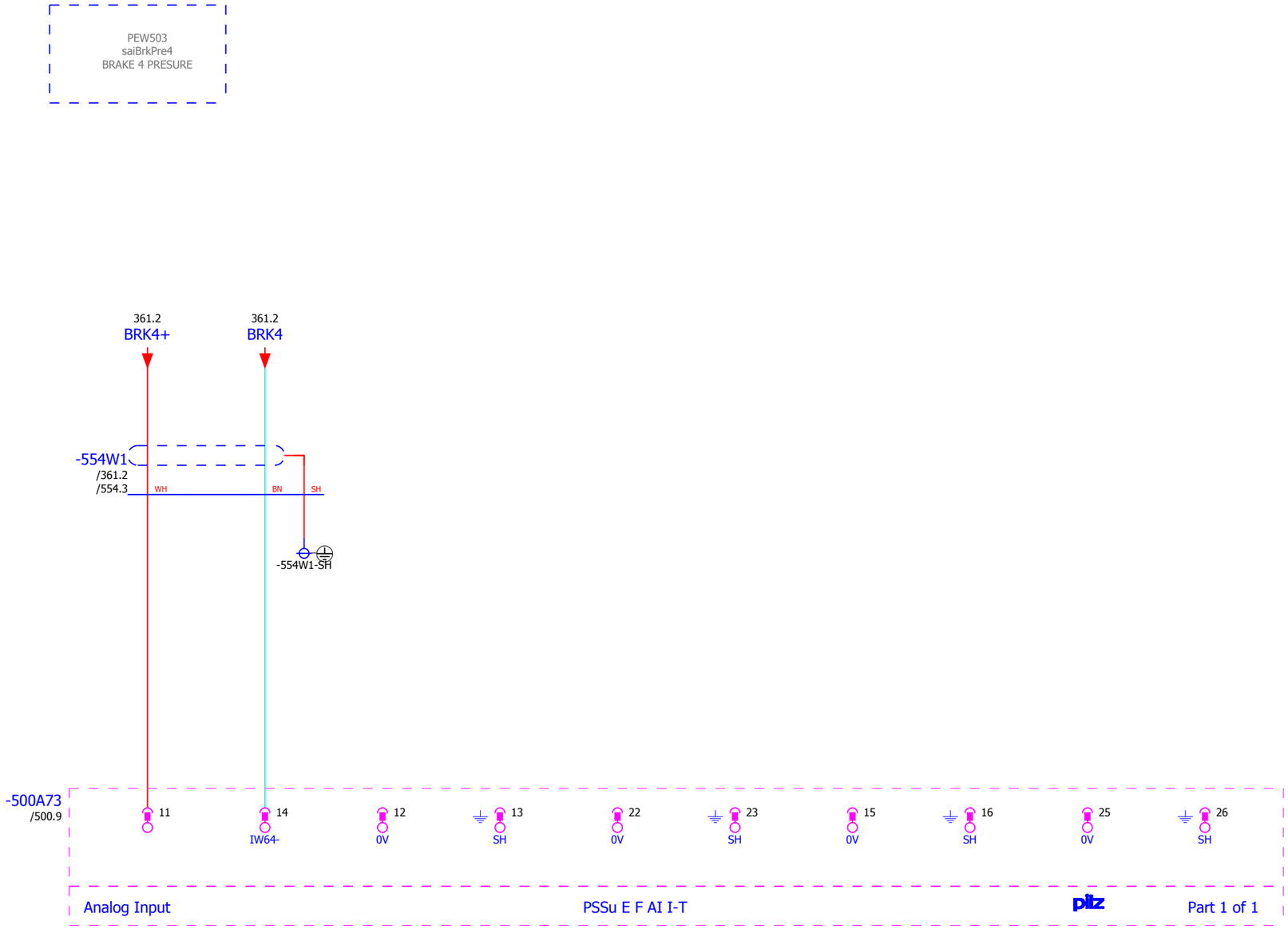

IK4 TEKNIKER Research Alliance

IK4-TEKNIKER
AVDA. OTAOLA 20
20600 Eibar (Gipuzkoa) Spain
Tfno.:(+34) 943 206744
Fax: (+34) 943 202757
Web: www.tekniker.es

Date	15/12/2017						
Reviewed	F.LÓPEZ	2.3	15/12/2017	JOSE MANUEL			
Drew by	JOSE MANUEL	Review	Date	Name	Review	Date	Name

3151_LSST

MCS Design Electrical Schematics

LSST TELESCOPE

Replaces | Replaced by

SAFETY ANALOG INPUT

Customer:
EMPRESARIOS AGRUPADOS
C/Magallanes, 3
28015 MADRID
91 3098000
http://www.empresariosagrupados.es/

= E1

+ TMA-AZ-CS-CBT-0001

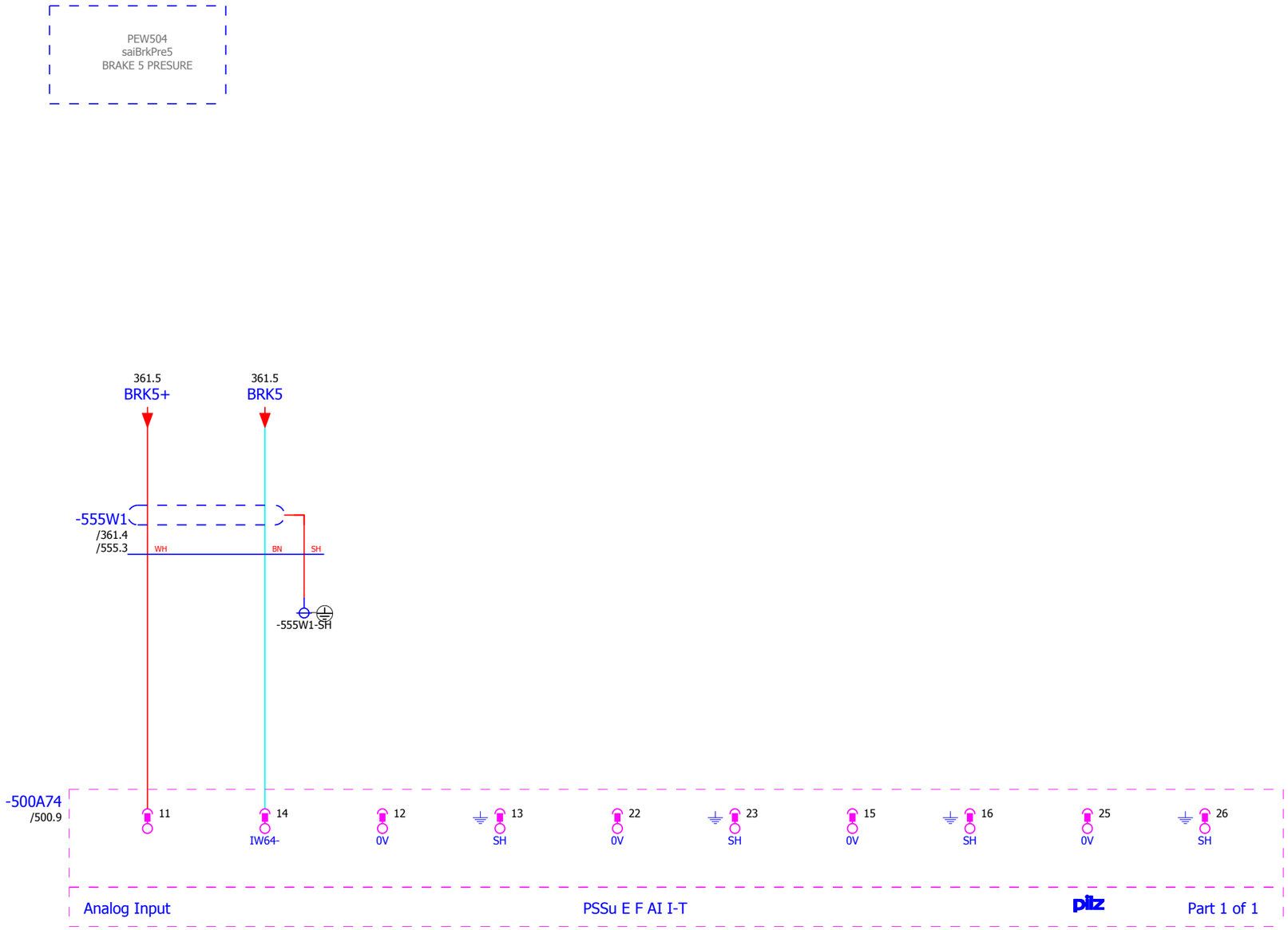

IK4 TEKNIKER Research Alliance
IK4-TEKNIKER
AVDA. OTAOLA 20
20600 Eibar (Gipuzkoa) Spain
Tfno.:(+34) 943 206744
Fax: (+34) 943 202757
Web: www.tekniker.es

Date	15/12/2017						
Reviewed	F.LÓPEZ	2.3	15/12/2017	JOSE MANUEL			
Drew by	JOSE MANUEL	Review	Date	Name	Review	Date	Name

3151_LSST
MCS Design Electrical Schematics
LSST TELESCOPE
Replaces
Replaced by

SAFETY ANALOG INPUT

Customer:
EMPRESARIOS AGRUPADOS
C/Magallanes, 3
28015 MADRID
91 3098000
http://www.empresariosagrupados.es/

= E1
+ TMA-AZ-CS-CBT-0001

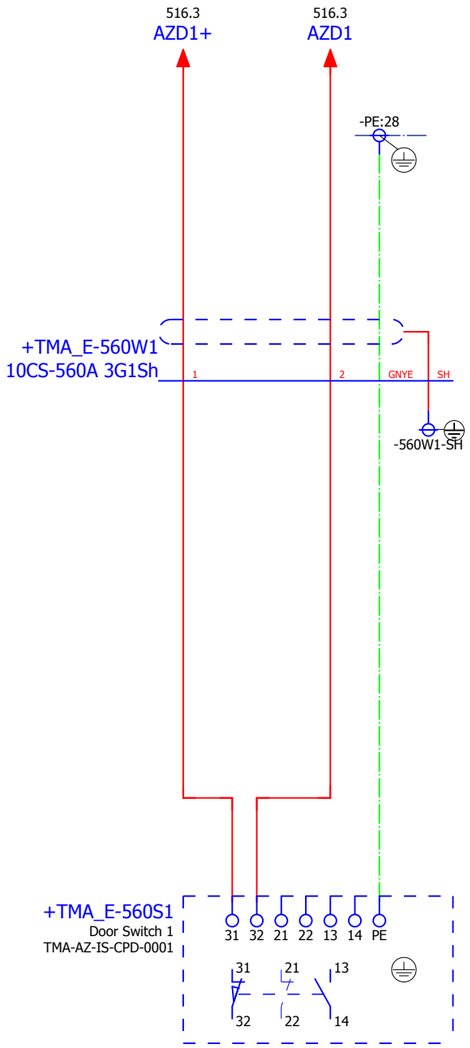

AZ Platform Access

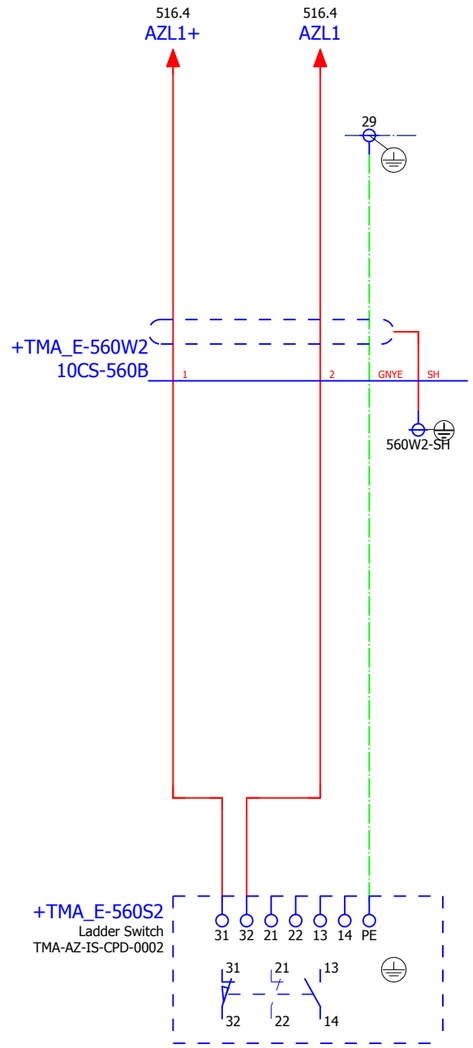

ladder parked position

IK4 TEKNIKER Research Alliance

IK4-TEKNIKER
AVDA. OTAOLA 20
20600 Eibar (Gipuzkoa) Spain
Tfno.:(+34) 943 206744
Fax: (+34) 943 202757
Web: www.tekniker.es

Date	15/12/2017						
Reviewed	F.LÓPEZ	2.3	15/12/2017	JOSE MANUEL			
Drew by	JOSE MANUEL	Review	Date	Name	Review	Date	Name

3151_LSST

MCS Design Electrical Schematics

LSST TELESCOPE

Replaces | Replaced by

AZIMUTH PLATFORM ACCESS

Customer:
EMPRESARIOS AGRUPADOS
C/Magallanes, 3
28015 MADRID
91 3098000
http://www.empresariosagrupados.es/

= E1

+ TMA-AZ-CS-CBT-0001

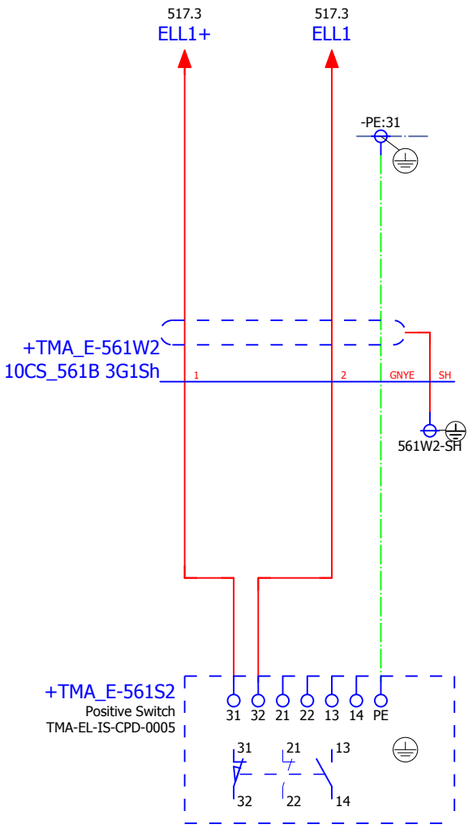

EL Limit switch
Power OFF (positive 90)

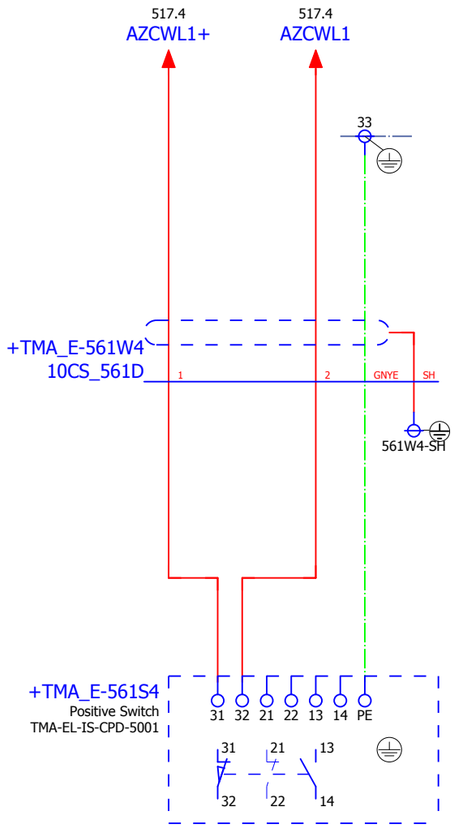

AZCW Limit switch

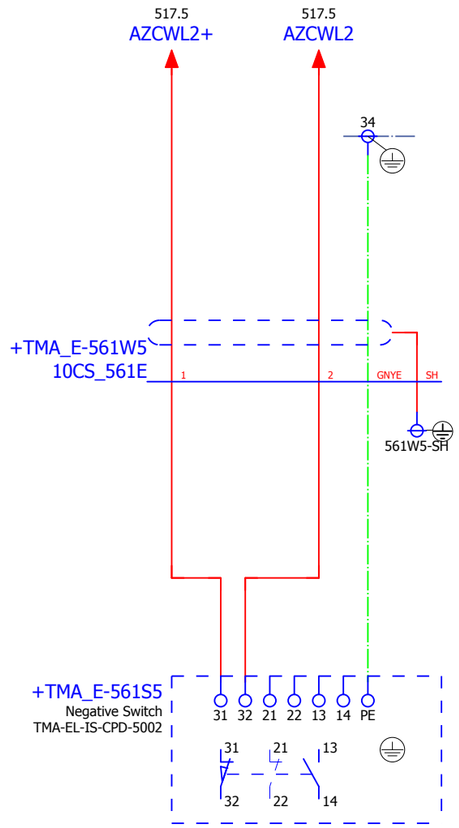

AZCW Limit switch

IK4 TEKNIKER Research Alliance
IK4-TEKNIKER
AVDA. OTAOLA 20
20600 Eibar (Gipuzkoa) Spain
Tfno.:(+34) 943 206744
Fax: (+34) 943 202757
Web: www.tekniker.es

Date	15/12/2017						
Reviewed	F.LÓPEZ	2.3	15/12/2017	JOSE MANUEL			
Drew by	JOSE MANUEL	Review	Date	Name	Review	Date	Name

3151_LSST
MCS Design Electrical Schematics
LSST TELESCOPE
Replaces
Replaced by

Power off Limit Switch

Customer: EMPRESARIOS AGRUPADOS
C/Magallanes, 3
28015 MADRID
91 3098000
http://www.empresariosagrupados.es/

= E1
+ TMA-AZ-CS-CBT-0001

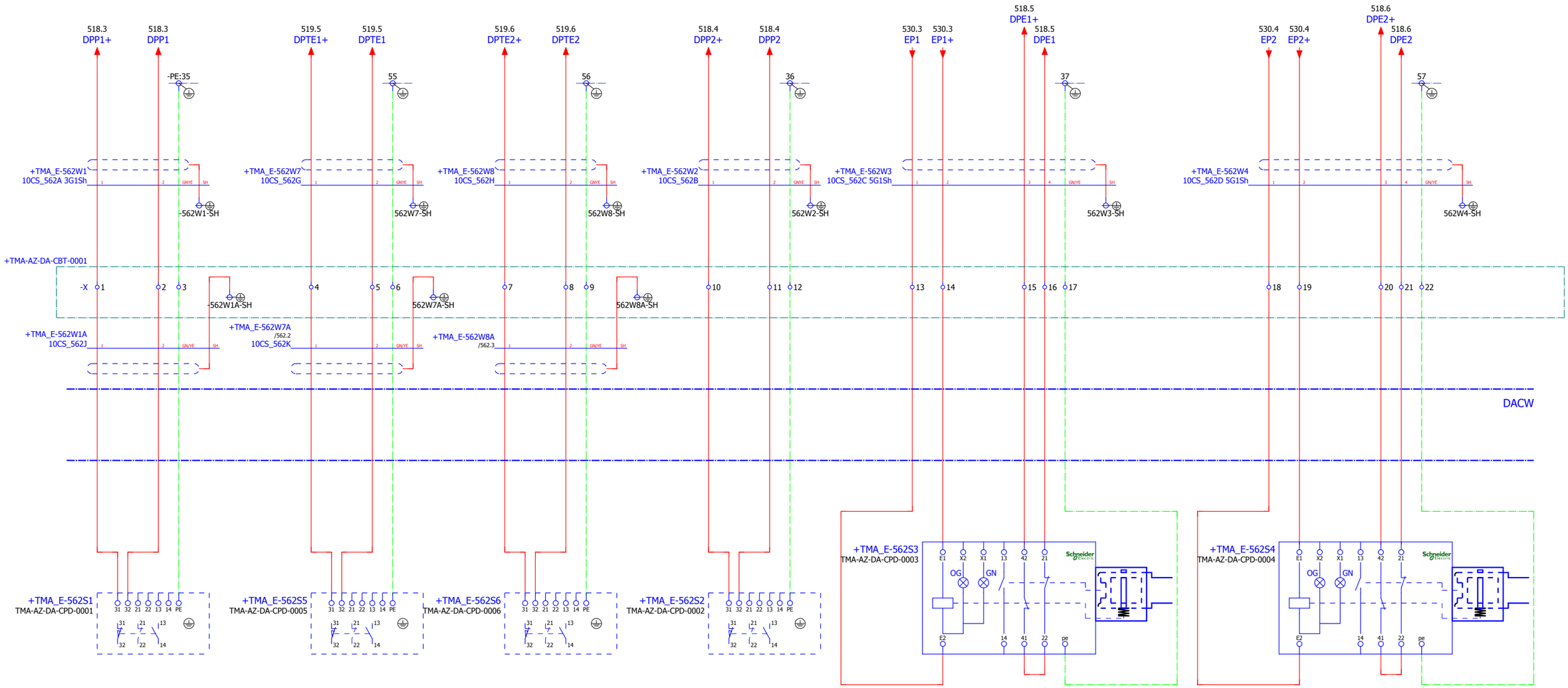

◁ 561

564 ▷

IK4 TEKNIKER Research Alliance
IK4-TEKNIKER
AVDA. OTAOLA 20
20600 Eibar (Gipuzkoa) Spain
Tfno.:(+34) 943 206744
Fax: (+34) 943 202757
Web: www.tekniker.es

Date	15/12/2017						
Reviewed	F.LÓPEZ	2.3	15/12/2017	JOSE MANUEL			
Drew by	JOSE MANUEL	Review	Date	Name	Review	Date	Name

3151_LSST
MCS Design Electrical Schematics
LSST TELESCOPE

Replaces | Replaced by

Deployable Platform Limit Switch

Customer: EMPRESARIOS AGRUPADOS
C/Magallanes, 3
28015 MADRID
91 3098000
http://www.empresariosagrupados.es/

= E1
+ TMA-AZ-CS-CBT-0001

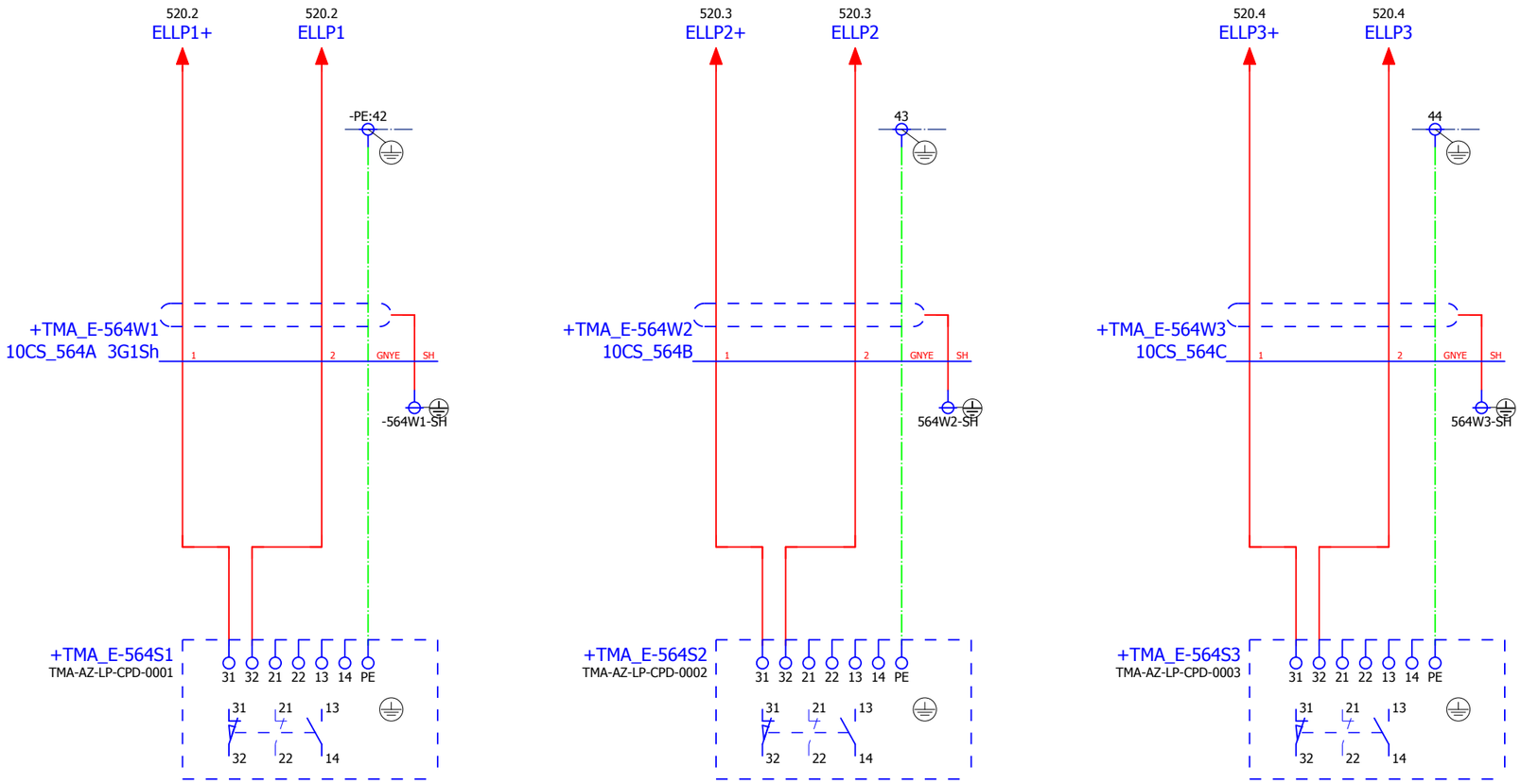

Elevation Locking Pin 1 Inserted

Elevation Locking Pin 1 Test

Elevation Locking Pin 1 retracted

IK4 TEKNIKER Research Alliance
IK4-TEKNIKER
AVDA. OTAOLA 20
20600 Eibar (Gipuzkoa) Spain
Tfno.:(+34) 943 206744
Fax: (+34) 943 202757
Web: www.tekniker.es

Date	15/12/2017						
Reviewed	F.LÓPEZ	2.3	15/12/2017	JOSE MANUEL			
Drew by	JOSE MANUEL	Review	Date	Name	Review	Date	Name

3151_LSST
MCS Design Electrical Schematics
LSST TELESCOPE

Replaces | Replaced by

Elevation Limit Switch

Customer: EMPRESARIOS AGRUPADOS
C/Magallanes, 3
28015 MADRID
91 3098000
http://www.empresariosagrupados.es/

= E1
+ TMA-AZ-CS-CBT-0001

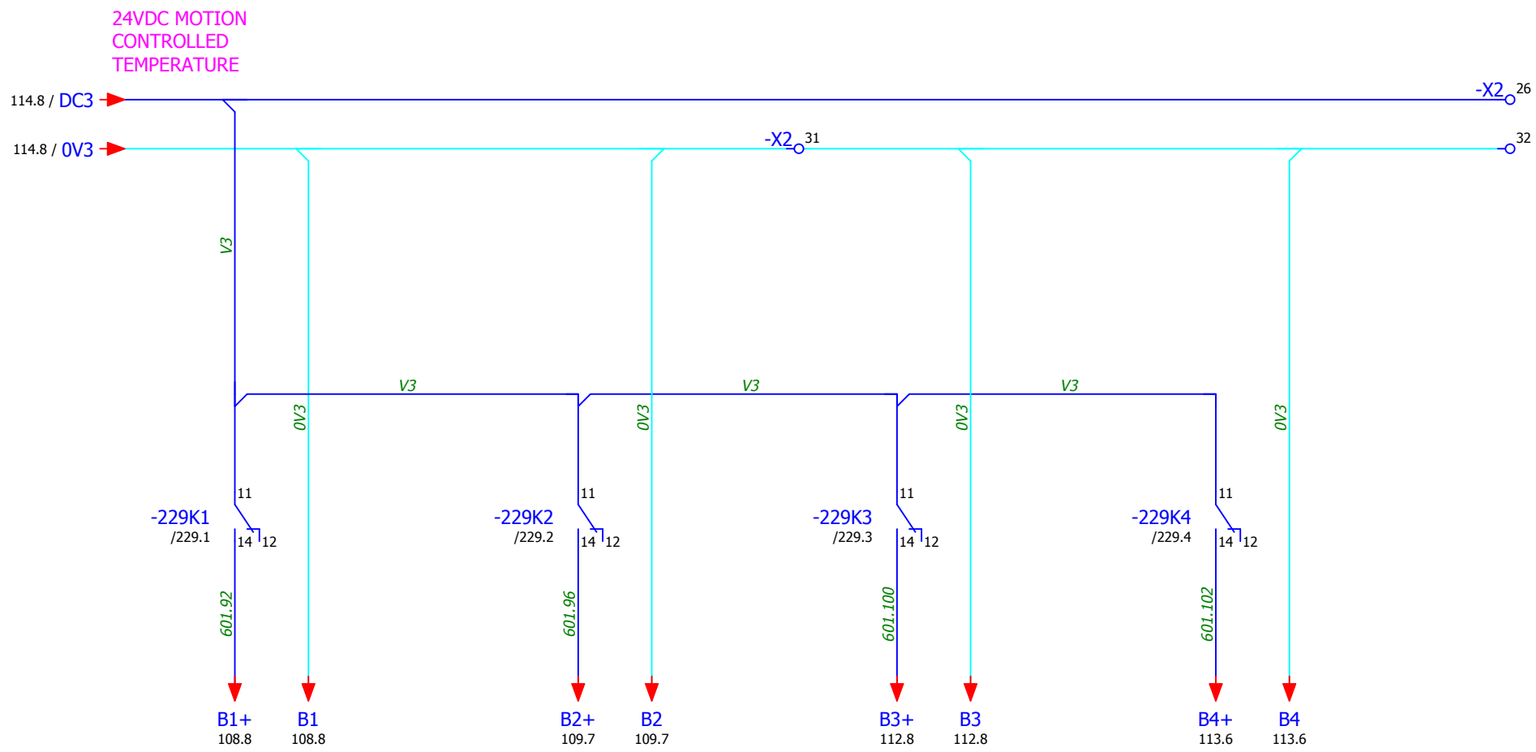

BRAKE
AZIMUTH CABLE WRAP 1

BRAKE
AZIMUTH CABLE WRAP 2

BRAKE
CAMERA CABLE WRAP 1

BRAKE
CAMERA CABLE WRAP 2

IK4 TEKNIKER Research Alliance
IK4-TEKNIKER
AVDA. OTAOLA 20
20600 Eibar (Gipuzkoa) Spain
Tfno.:(+34) 943 206744
Fax: (+34) 943 202757
Web: www.tekniker.es

Date	28/11/2017						
Reviewed	F.LÓPEZ	2.3	15/12/2017	JOSE MANUEL			
Drew by	JOSE MANUEL	Review	Date	Name	Review	Date	Name

3151_LSST
MCS Design Electrical Schematics
LSST TELESCOPE

Replaces
Replaced by

COMAND

Customer:
EMPRESARIOS AGRUPADOS
C/Magallanes, 3
28015 MADRID
91 3098000
http://www.empresariosagrupados.es/

= E1
+ TMA-AZ-CS-CBT-0001

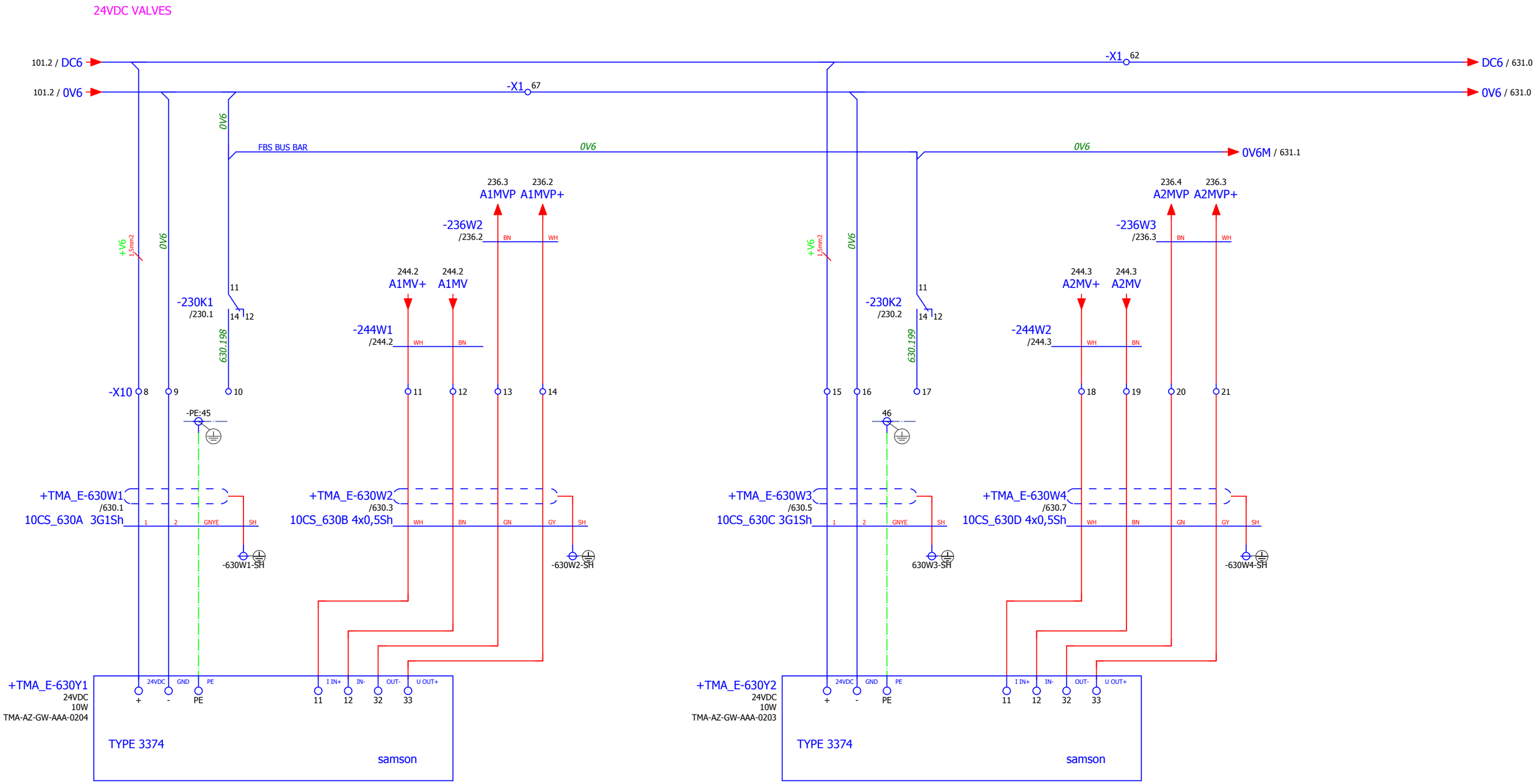

AZIMUTH 1-8 MIXING VALVE

AZIMUTH 9-16 MIXING VALVE

IK4 TEKNIKER Research Alliance

IK4-TEKNIKER
AVDA. OTAOLA 20
20600 Eibar (Gipuzkoa) Spain
Tfno.:(+34) 943 206744
Fax: (+34) 943 202757
Web: www.tekniker.es

Date	15/12/2017						
Reviewed	F.LÓPEZ	2.3	15/12/2017	JOSE MANUEL			
Drew by	JOSE MANUEL	Review	Date	Name	Review	Date	Name

3151_LSST

MCS Design Electrical Schematics

LSST TELESCOPE

Replaces

Replaced by

MIXING VALVES

Customer: EMPRESARIOS AGRUPADOS
C/Magallanes, 3
28015 MADRID
91 3098000
http://www.empresariosagrupados.es/

= E1

+ TMA-AZ-CS-CBT-0001

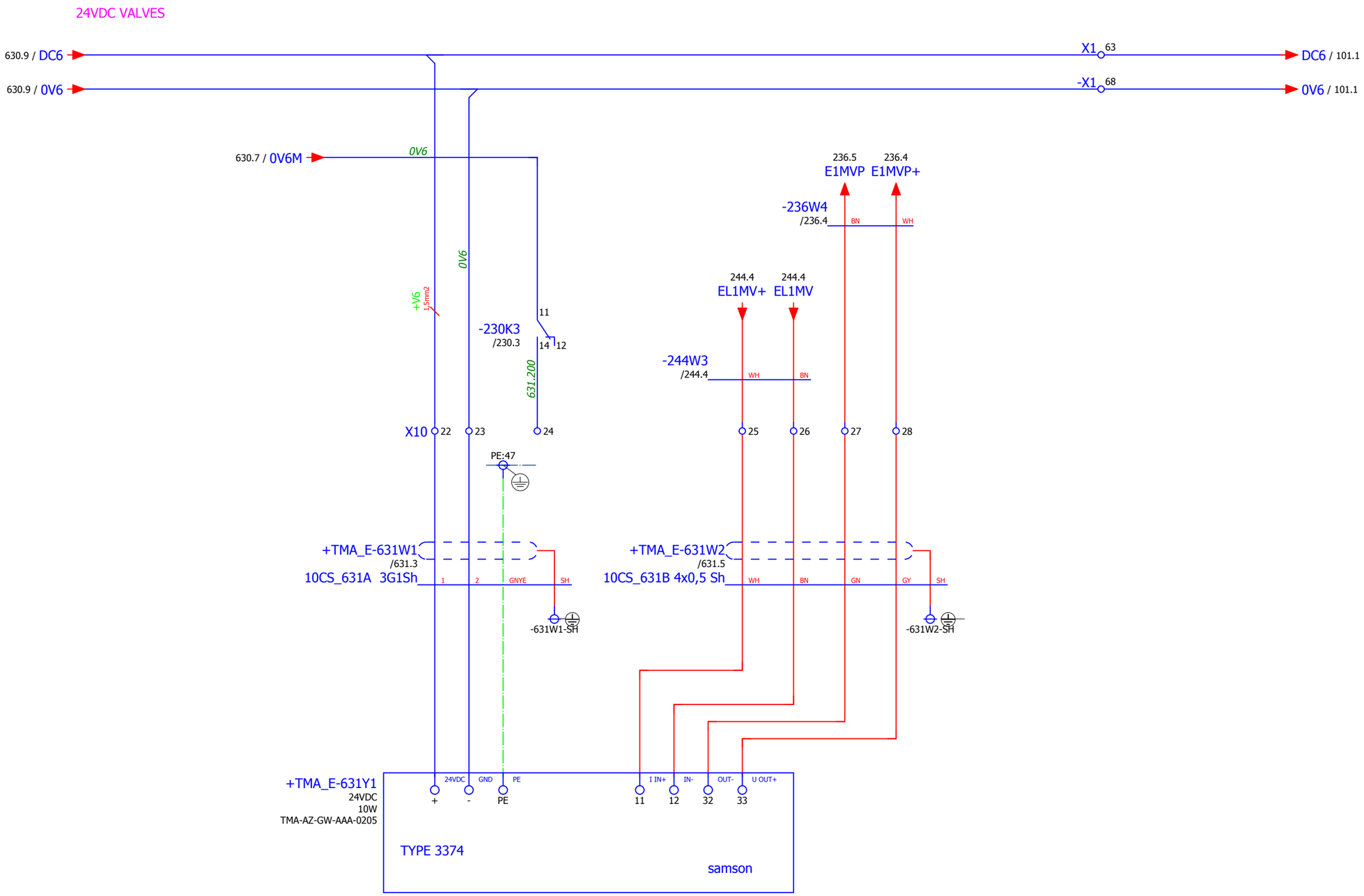

ELEVATION 1-6 MIXING VALVE

IK4 TEKNIKER Research Alliance

IK4-TEKNIKER
AVDA. OTAOLA 20
20600 Eibar (Gipuzkoa) Spain
Tfno.:(+34) 943 206744
Fax: (+34) 943 202757
Web: www.tekniker.es

Date	15/12/2017							
Reviewed	F.LÓPEZ	2.3	15/12/2017	JOSE MANUEL				
Drew by	JOSE MANUEL	Review	Date	Name	Review	Date	Name	

3151_LSST

MCS Design Electrical Schematics

LSST TELESCOPE

Replaces

Replaced by

MIXING VALVES

Customer: EMPRESARIOS AGRUPADOS
C/Magallanes, 3
28015 MADRID
91 3098000
http://www.empresariosagrupados.es/

= E1

+ TMA-AZ-CS-CBT-0001

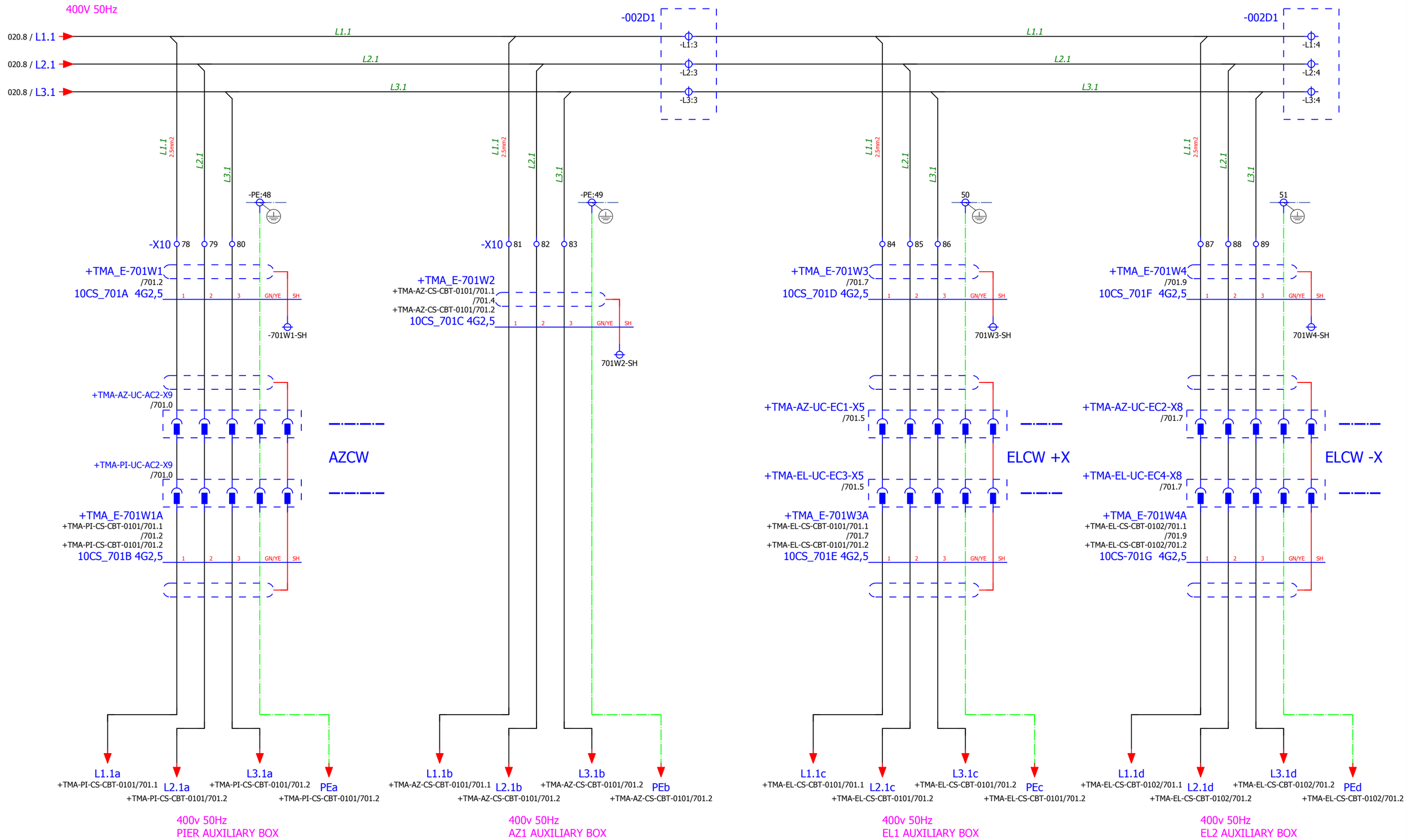

+TMA-AZ-UC-AC2-X9 = AZCW AUXILIARY BOX 1 POWER CONNECTIONS PLATE IN AZ SIDE

+TMA-PI-UC-AC2-X9 = AZCW AUXILIARY BOX 1 POWER CONNECTIONS PLATE IN PI SIDE

+TMA-AZ-UC-EC1-X5 = EL1 AUXILIARY BOX POWER CONNECTIONS IN AZ SIDE

+TMA-EL-UC-EC3-X5 = EL1 AUXILIARY BOX POWER CONNECTIONS IN EL SIDE

+TMA-AZ-UC-EC2-X8 = EL2 AUXILIARY BOX POWER CONNECTIONS IN AZ SIDE

+TMA-EL-UC-EC4-X8 = EL2 AUXILIARY BOX POWER CONNECTIONS IN EL SIDE

◁ 631

702 ▷

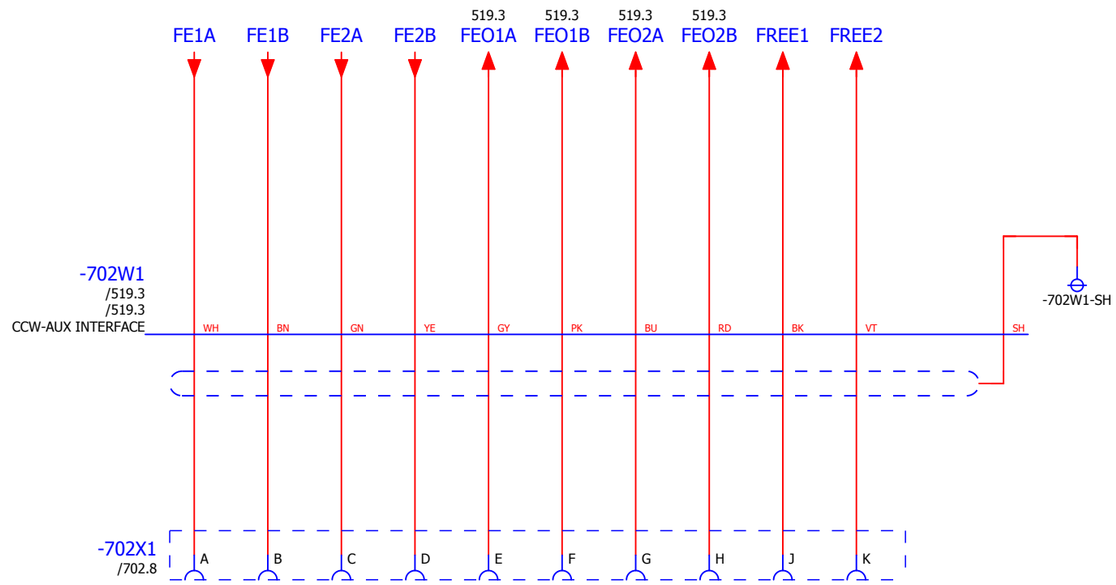

◁ 701

750 ▷

IK4-TEKNIKER
AVDA. OTAOLA 20
20600 Eibar (Gipuzkoa) Spain
Tfno.:(+34) 943 206744
Fax: (+34) 943 202757
Web: www.tekniker.es

Date	15/12/2017						
Reviewed	F.LÓPEZ	2.3	15/12/2017	JOSE MANUEL			
Drew by	JOSE MANUEL	Review	Date	Name	Review	Date	Name

3151_LSST

MCS Design Electrical Schematics

LSST TELESCOPE

Replaces

Replaced by

CCW-AUX CABINET INTERFACE

Customer:

EMPRESARIOS AGRUPADOS

C/Magallanes, 3
28015 MADRID
91 3098000

http://www.empresariosagrupados.es/

= E1

+ TMA-AZ-CS-CBT-0001

Page 702
Total number 710

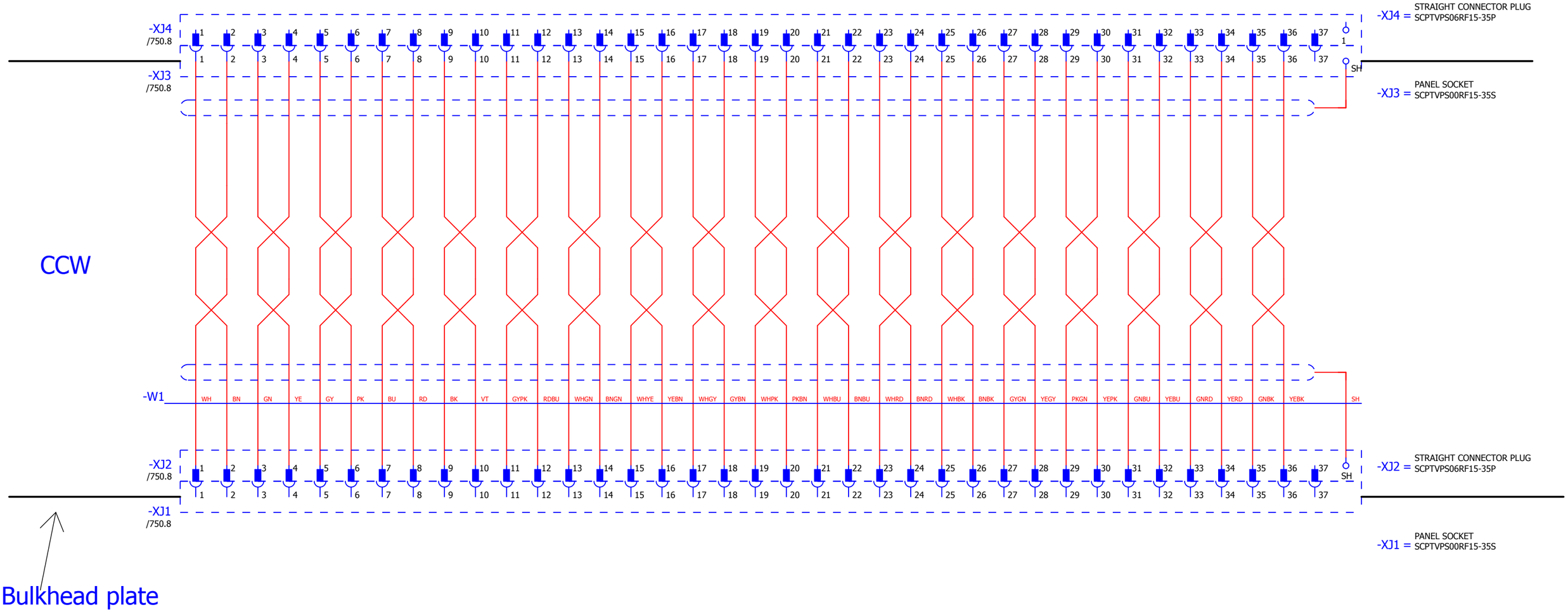

camera on telescope side

IK4 TEKNIKER Research Alliance
IK4-TEKNIKER
AVDA. OTAOLA 20
20600 Eibar (Gipuzkoa) Spain
Tfno.:(+34) 943 206744
Fax: (+34) 943 202757
Web: www.tekniker.es

Date	15/12/2017						
Reviewed	F.LÓPEZ	2.3	15/12/2017	JOSE MANUEL			
Drew by	JOSE MANUEL	Review	Date	Name	Review	Date	Name

3151_LSST
MCS Design Electrical Schematics
LSST TELESCOPE

Replaces | Replaced by

CCW SIGNAL CONNECTIONS

Customer: EMPRESARIOS AGRUPADOS
C/Magallanes, 3
28015 MADRID
91 3098000
http://www.empresariosagrupados.es/

= E1
+ TMA-AZ-CS-CBT-0001

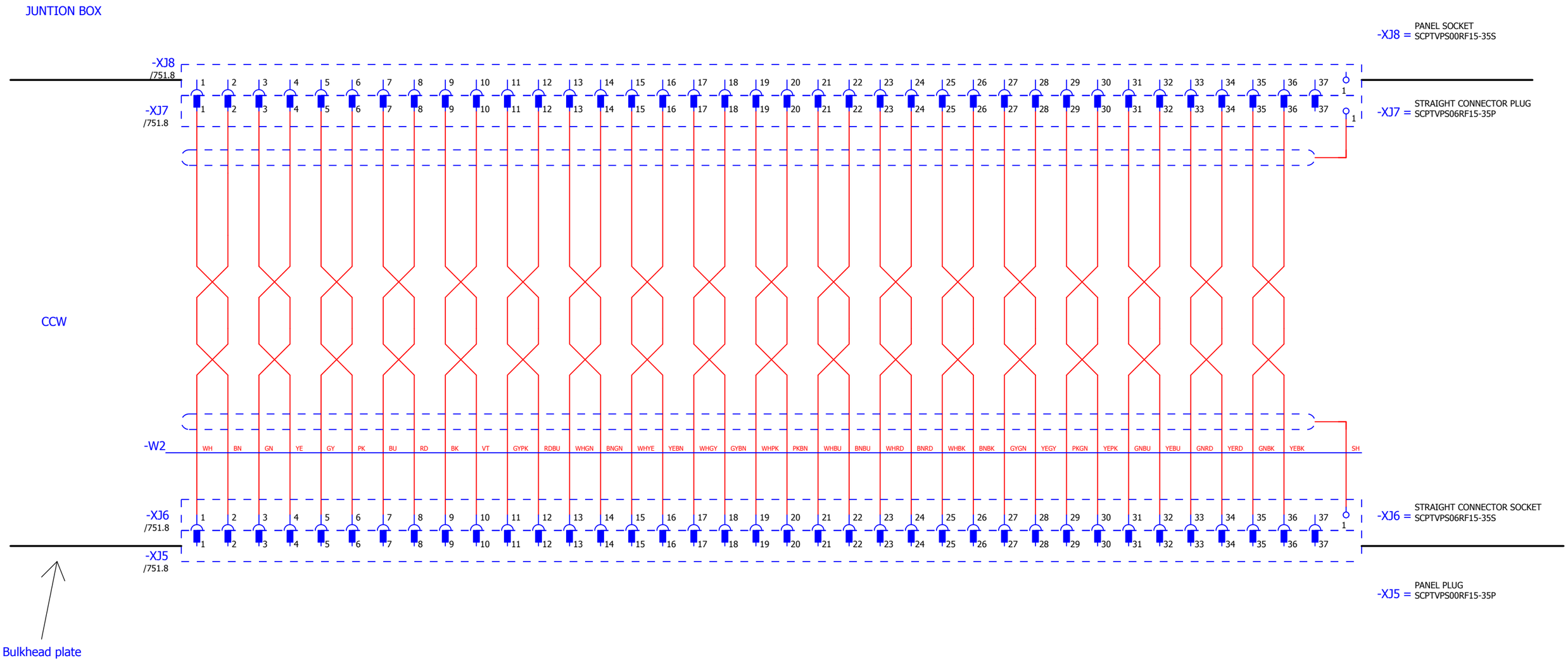

◁ 750

801 ▷

IK4 TEKNIKER Research Alliance	IK4-TEKNIKER AVDA. OTAOLA 20 20600 Eibar (Gipuzkoa) Spain Tfno.:(+34) 943 206744 Fax: (+34) 943 202757 Web: www.tekniker.es								3151_LSST	MCS Design Electrical Schematics LSST TELESCOPE	CCW SIGNAL CONNECTIONS	Customer: EMPRESARIOS AGRUPADOS C/Magallanes, 3 28015 MADRID 91 3098000 http://www.empresariosagrupados.es/	= E1 + TMA-AZ-CS-CBT-0001
		Date	15/12/2017										
		Reviewed	F.LÓPEZ	2.3	15/12/2017	JOSE MANUEL							
		Drew by	JOSE MANUEL	Review	Date	Name	Review	Date	Name	Replaces	Replaced by		Page 751 Total number 710

◁ 751

802 ▷

IK4 TEKNIKER Research Alliance
IK4-TEKNIKER
AVDA. OTAOLA 20
20600 Eibar (Gipuzkoa) Spain
Tfno.:(+34) 943 206744
Fax: (+34) 943 202757
Web: www.tekniker.es

Date	23/02/2017						
Reviewed	F.LÓPEZ	2.3	15/12/2017	JOSE MANUEL			
Drew by	jcastano	Review	Date	Name	Review	Date	Name

3151_LSST
MCS Design Electrical Schematics
LSST TELESCOPE

Replaces | Replaced by

Cabinet general view

Customer:
EMPRESARIOS AGRUPADOS
C/Magallanes, 3
28015 MADRID
91 3098000
http://www.empresariosagrupados.es/

= E1
+ TMA-AZ-CS-CBT-0001

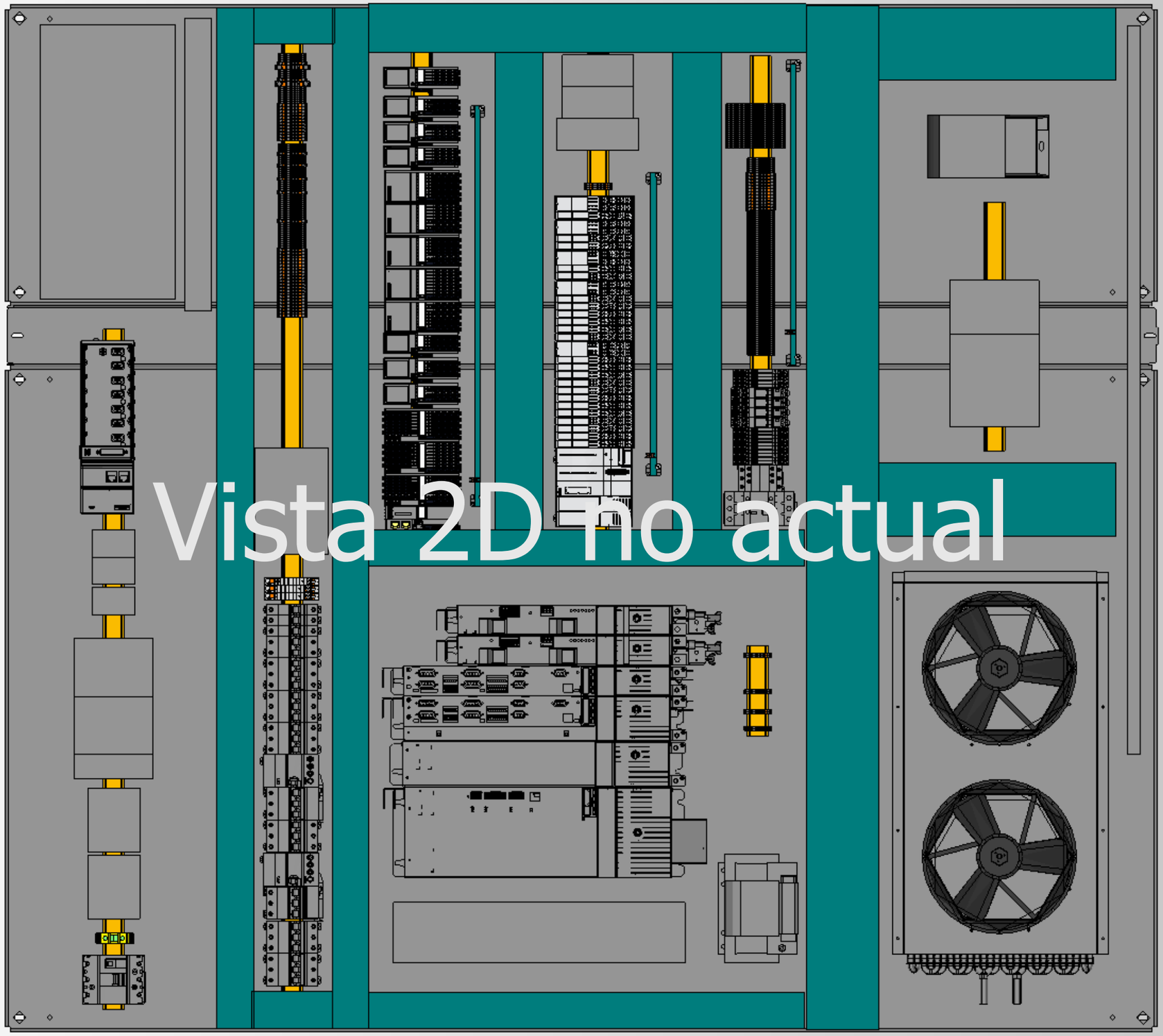

◁ 801

803 ▷

IK4 TEKNIKER Research Alliance
IK4-TEKNIKER
AVDA. OTAOLA 20
20600 Eibar (Gipuzkoa) Spain
Tfno.:(+34) 943 206744
Fax: (+34) 943 202757
Web: www.tekniker.es

Date	23/02/2017							
Reviewed	F.LÓPEZ	2.3	15/12/2017	JOSE MANUEL				
Drew by	jcastano	Review	Date	Name	Review	Date	Name	

3151_LSST
MCS Design Electrical Schematics
LSST TELESCOPE

Replaces | Replaced by

Mounting plate general view

Customer: EMPRESARIOS AGRUPADOS
C/Magallanes, 3
28015 MADRID
91 3098000
http://www.empresariosagrupados.es/

= E1
+ TMA-AZ-CS-CBT-0001

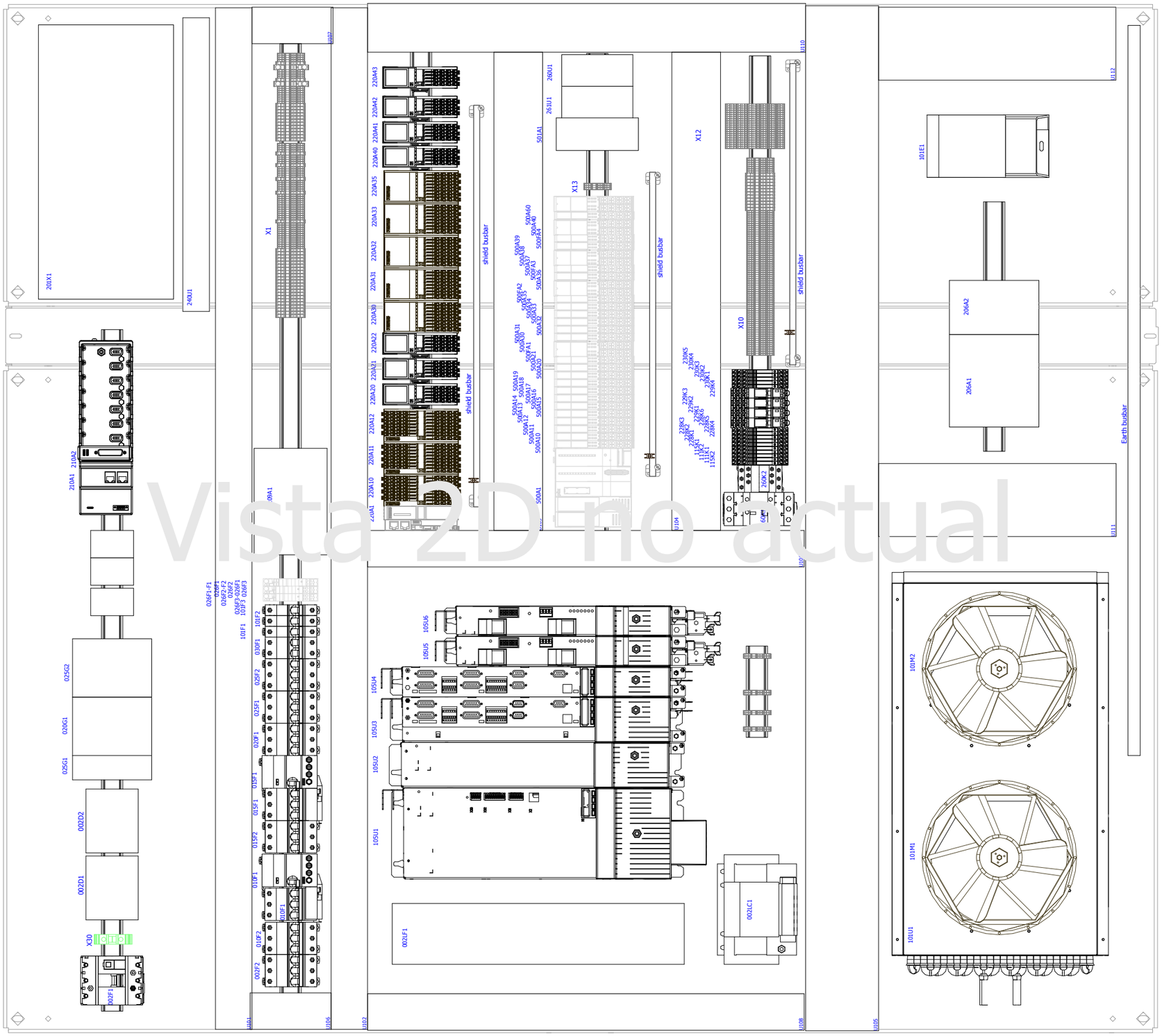

◁ 802

804 ▷

IK4-TEKNIKER
AVDA. OTAOLA 20
20600 Eibar (Gipuzkoa) Spain
Tfno.:(+34) 943 206744
Fax: (+34) 943 202757
Web: www.tekniker.es

Date	23/02/2017						
Reviewed	F.LÓPEZ	2.3	15/12/2017	JOSE MANUEL			
Drew by	jcastano	Review	Date	Name	Review	Date	Name

3151_LSST

MCS Design Electrical Schematics

LSST TELESCOPE

Replaces

Replaced by

Mounting plate

Customer: EMPRESARIOS AGRUPADOS

C/Magallanes, 3
28015 MADRID
91 3098000

http://www.empresariosagrupados.es/

= E1

+ TMA-AZ-CS-CBT-0001

TBC

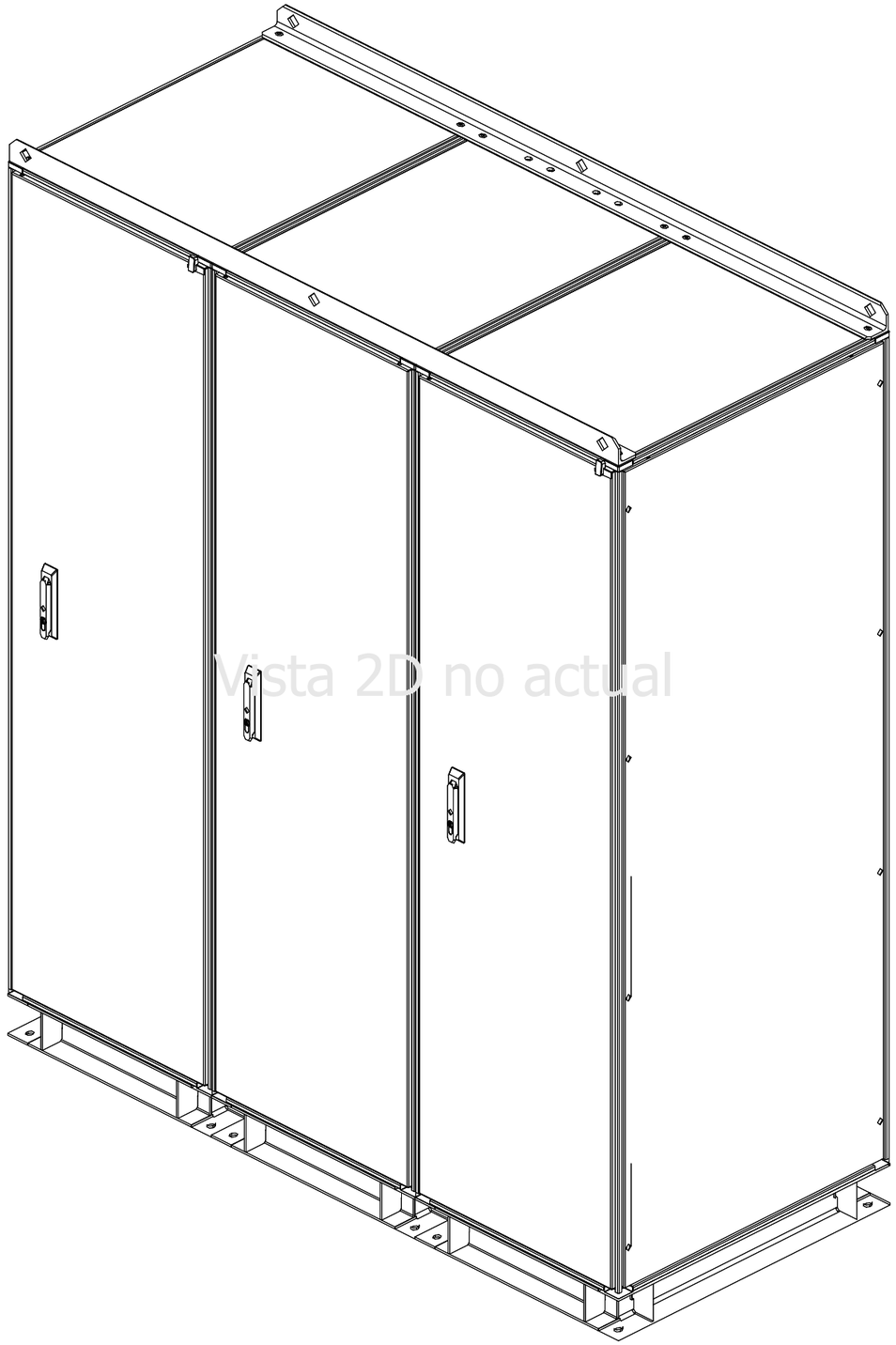

back Side

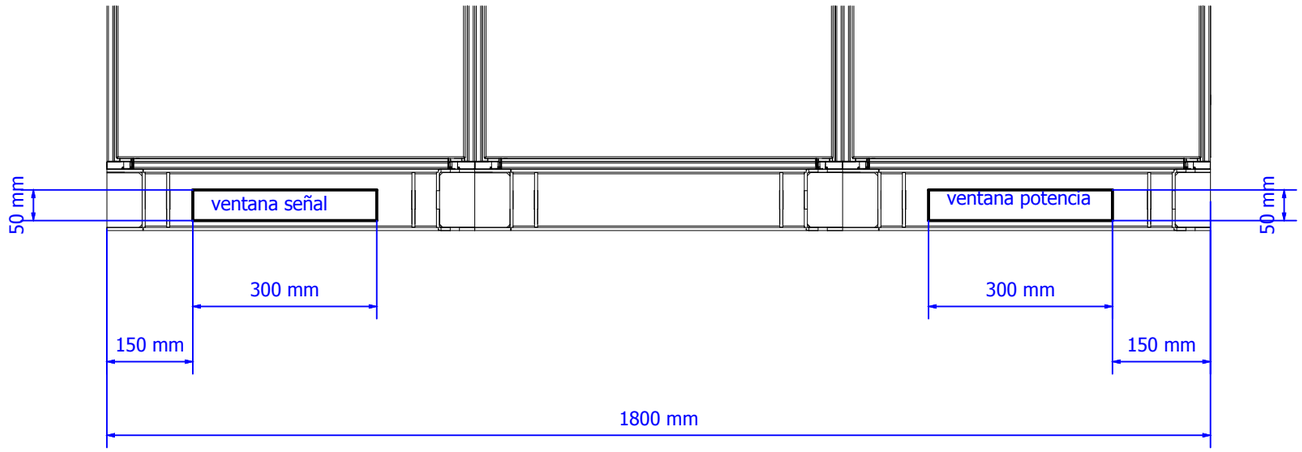

IK4 TEKNIKER Research Alliance
IK4-TEKNIKER
AVDA. OTAOLA 20
20600 Eibar (Gipuzkoa) Spain
Tfno.:(+34) 943 206744
Fax: (+34) 943 202757
Web: www.tekniker.es

Date	15/12/2017							
Reviewed	F.LÓPEZ	2.3	15/12/2017	JOSE MANUEL				
Drew by	JOSE MANUEL	Review	Date	Name	Review	Date	Name	

3151_LSST
MCS Design Electrical Schematics
LSST TELESCOPE

Replaces | Replaced by

Cable Entrance Dimensions
FRONT OR BACK SIDE

Customer: EMPRESARIOS AGRUPADOS
C/Magallanes, 3
28015 MADRID
91 3098000
http://www.empresariosagrupados.es/

= E1
+ TMA-AZ-CS-CBT-0001

TBC

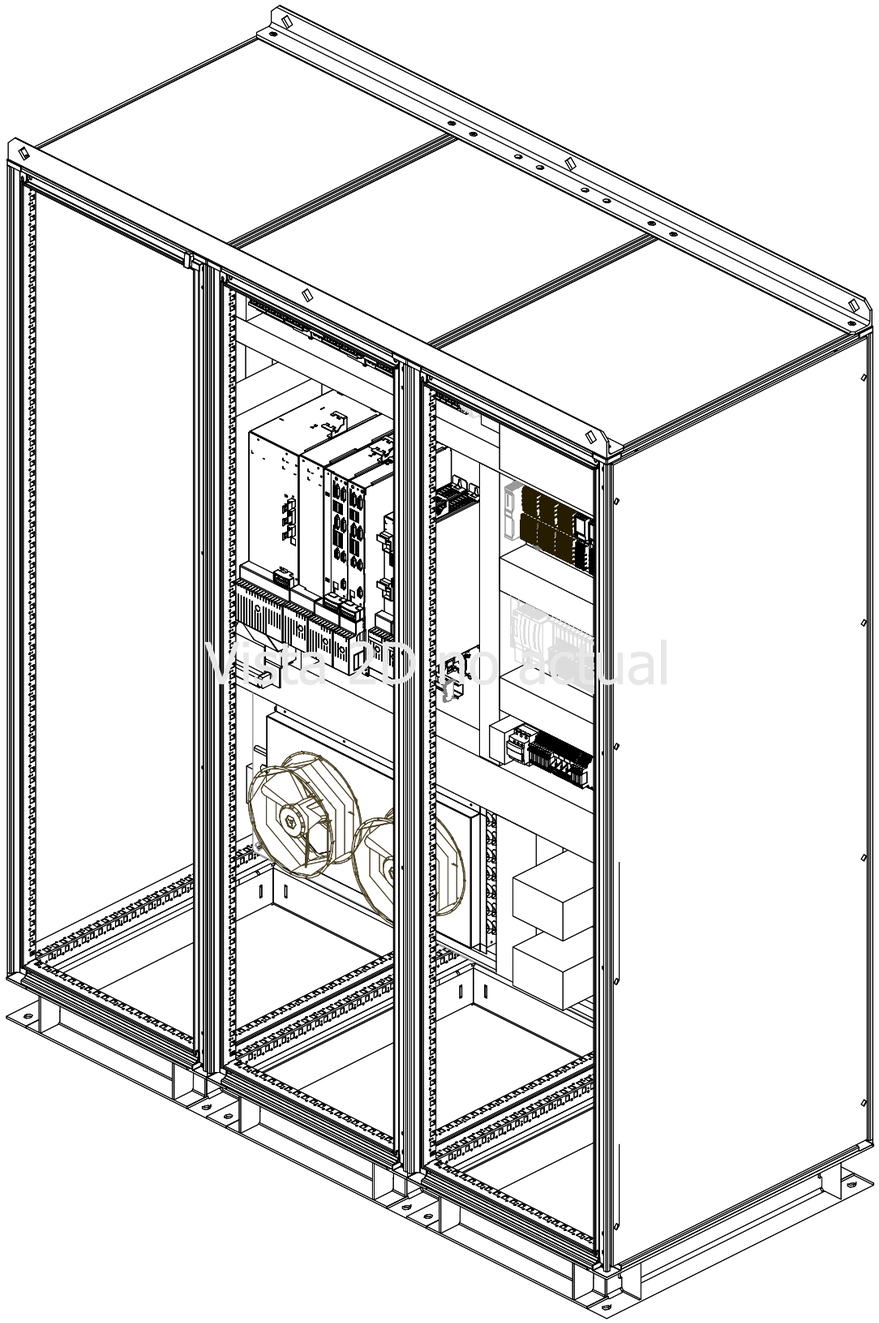

BOTOM VIEW

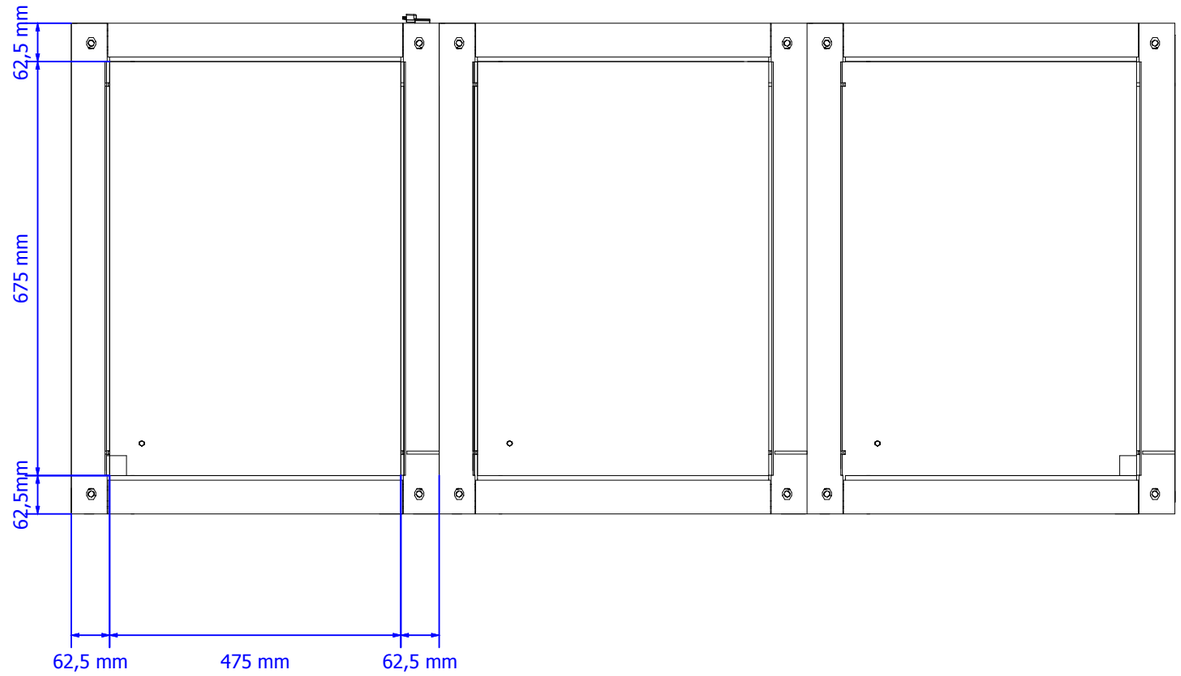

IK4 TEKNIKER Research Alliance

IK4-TEKNIKER
AVDA. OTAOLA 20
20600 Eibar (Gipuzkoa) Spain
Tfno.:(+34) 943 206744
Fax: (+34) 943 202757
Web: www.tekniker.es

Date	07/11/2016						
Reviewed	F.LÓPEZ	2.3	15/12/2017	JOSE MANUEL			
Drew by	jcastano	Review	Date	Name	Review	Date	Name

3151_LSST — MCS Design Electrical Schematics

LSST TELESCOPE

Replaces | Replaced by

Cable Entrance Dimensions
BOTOM

Customer: EMPRESARIOS AGRUPADOS
C/Magallanes, 3
28015 MADRID
91 3098000
http://www.empresariosagrupados.es/

= E1
+ TMA-AZ-CS-CBT-0001

TBC

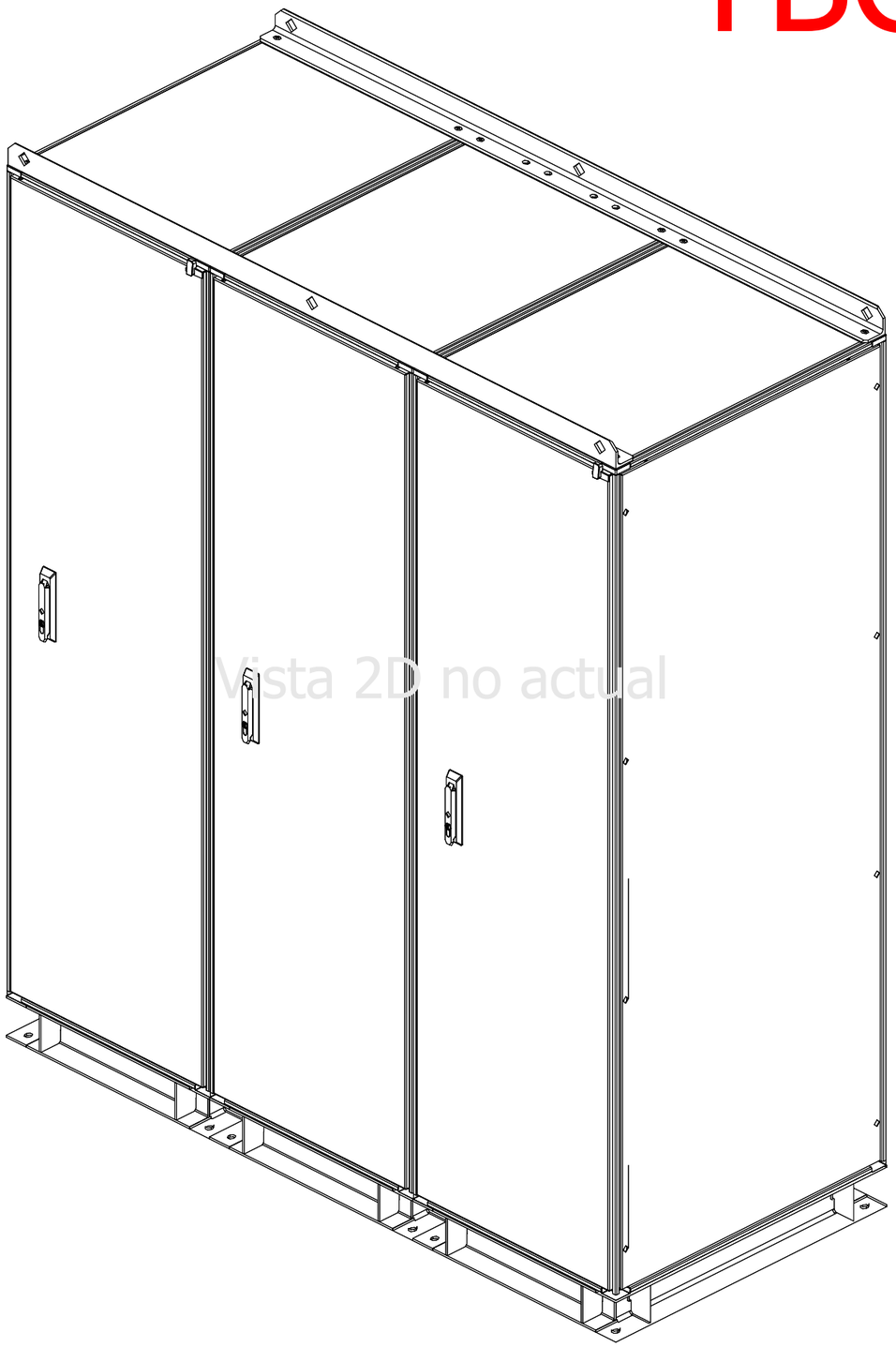

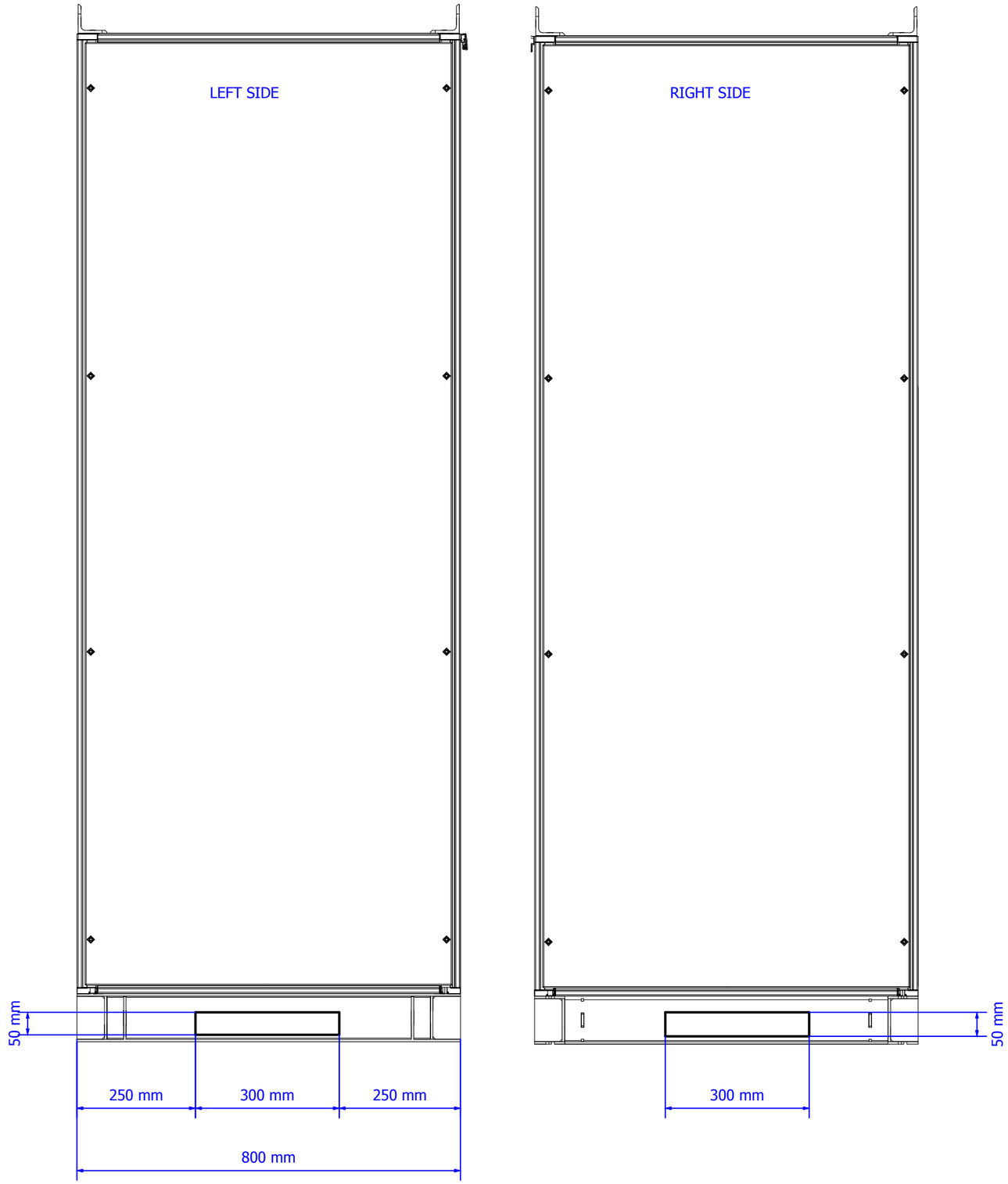

IK4 TEKNIKER Research Alliance
IK4-TEKNIKER
AVDA. OTAOLA 20
20600 Eibar (Gipuzkoa) Spain
Tfno.:(+34) 943 206744
Fax: (+34) 943 202757
Web: www.tekniker.es

Date	30/09/2016							
Reviewed	F.LÓPEZ	2.3	15/12/2017	JOSE MANUEL				
Drew by	jcastano	Review	Date	Name	Review	Date	Name	

3151_LSST

MCS Design Electrical Schematics

LSST TELESCOPE

Replaces | Replaced by

Cable Entrance Dimensions
RIGHT & LEFT SIDE

Customer: EMPRESARIOS AGRUPADOS
C/Magallanes, 3
28015 MADRID
91 3098000
http://www.empresariosagrupados.es/

= E1
+ TMA-AZ-CS-CBT-0001

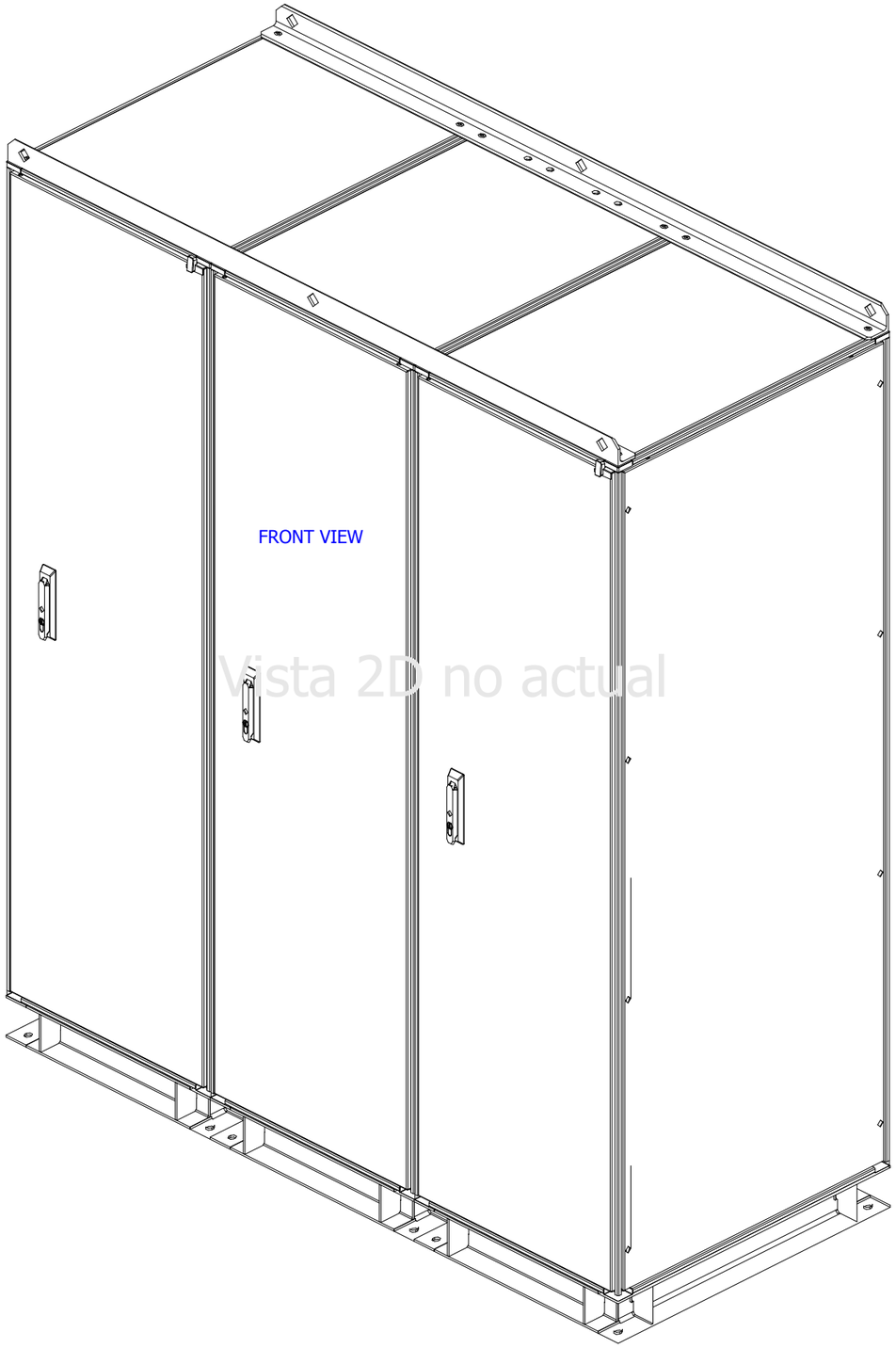

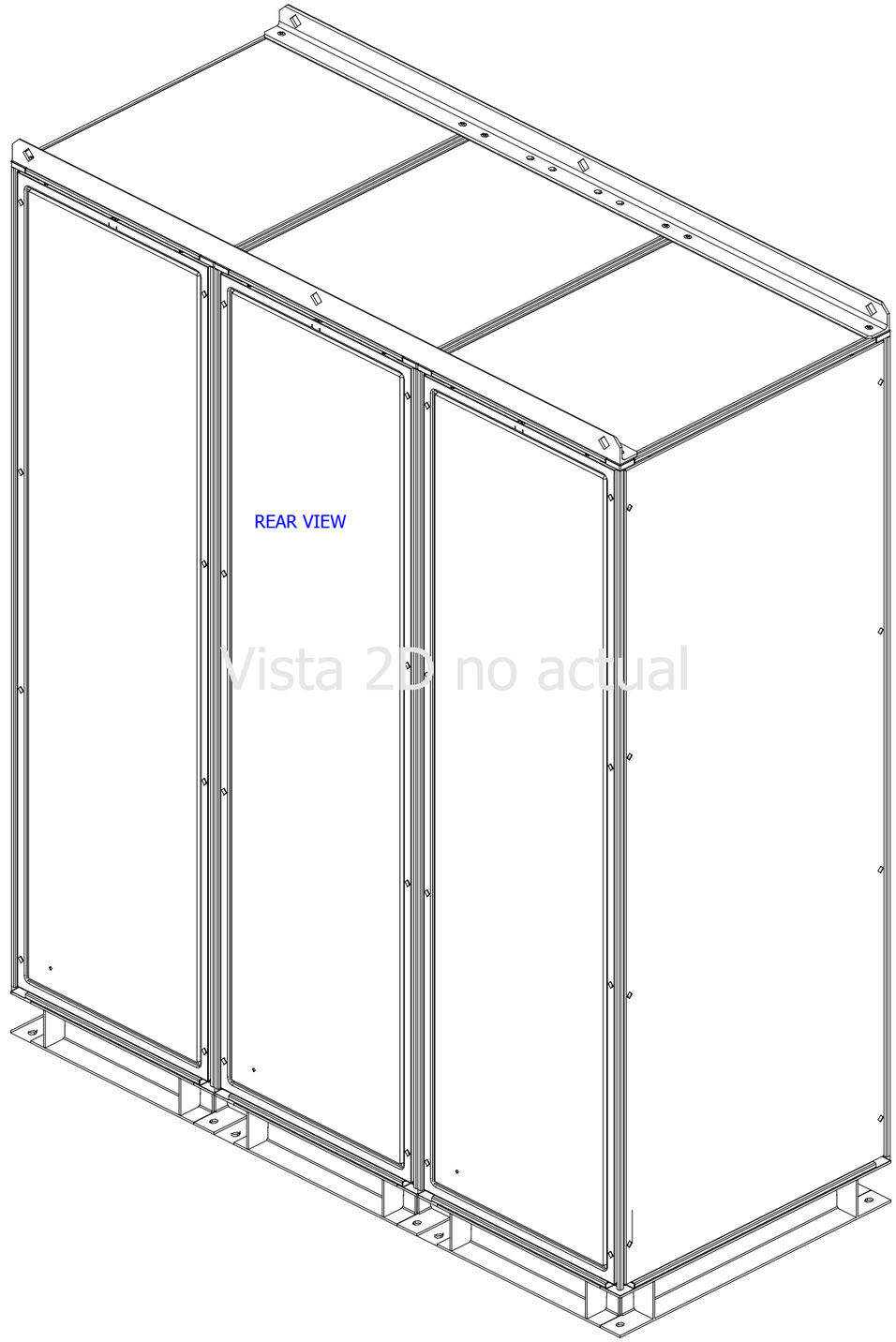

◁ 806

808 ▷

IK4 TEKNIKER Research Alliance
IK4-TEKNIKER
AVDA. OTAOLA 20
20600 Eibar (Gipuzkoa) Spain
Tfno.:(+34) 943 206744
Fax: (+34) 943 202757
Web: www.tekniker.es

Date	30/09/2016							
Reviewed	F.LÓPEZ	2.3	15/12/2017	JOSE MANUEL				
Drew by	jcastano	Review	Date	Name	Review	Date	Name	

3151_LSST
MCS Design Electrical Schematics
LSST TELESCOPE

Replaces | Replaced by

CABINET VIEW

Customer: EMPRESARIOS AGRUPADOS
C/Magallanes, 3
28015 MADRID
91 3098000
http://www.empresariosagrupados.es/

= E1
+ TMA-AZ-CS-CBT-0001

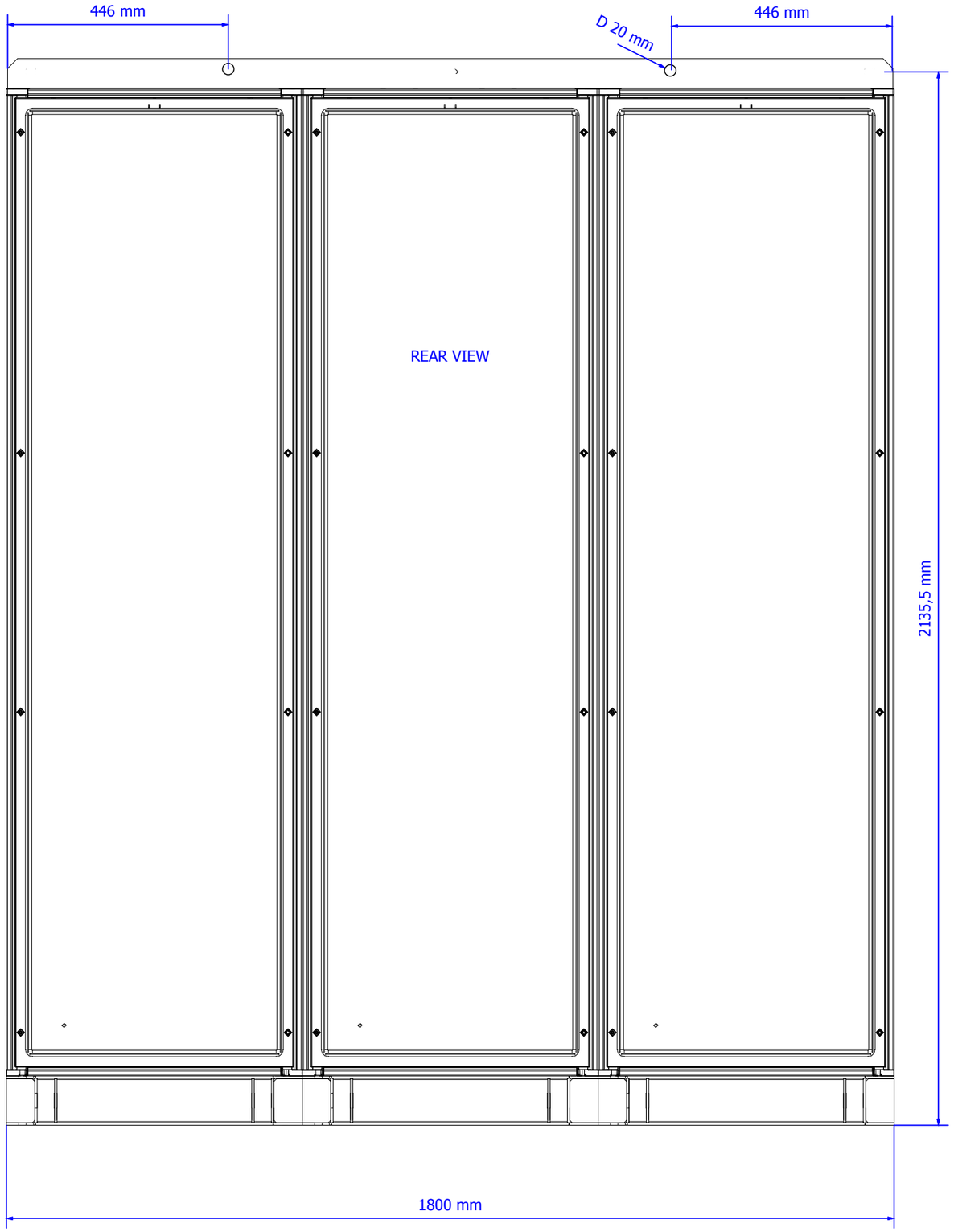

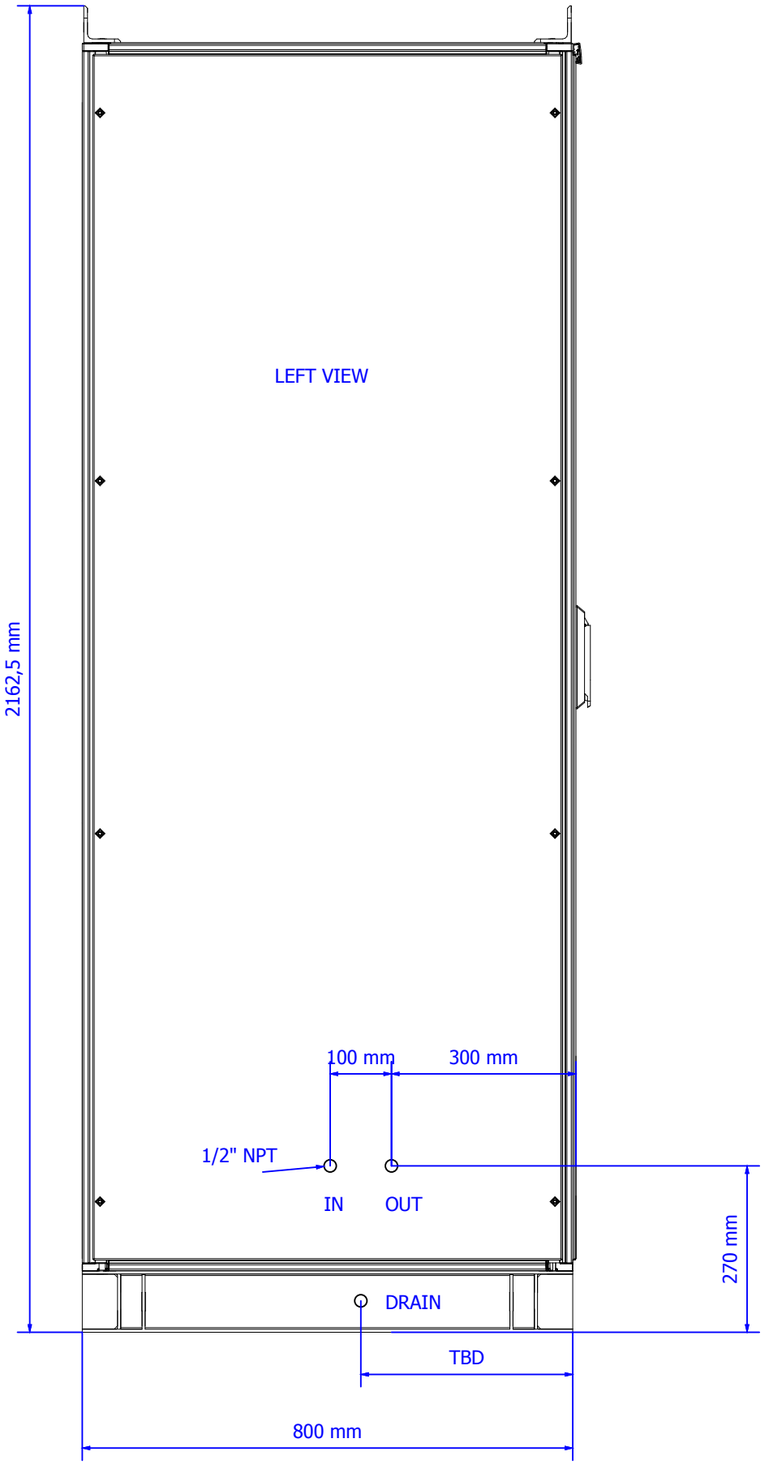

IK4 TEKNIKER Research Alliance

IK4-TEKNIKER
AVDA. OTAOLA 20
20600 Eibar (Gipuzkoa) Spain
Tfno.:(+34) 943 206744
Fax: (+34) 943 202757
Web: www.tekniker.es

Date	11/05/2017						
Reviewed	F.LÓPEZ	2.3	15/12/2017	JOSE MANUEL			
Drew by	JOSE MANUEL	Review	Date	Name	Review	Date	Name

3151_LSST

MCS Design Electrical Schematics

LSST TELESCOPE

Replaces | Replaced by

CABINET DIMENSIONS

Customer: EMPRESARIOS AGRUPADOS
C/Magallanes, 3
28015 MADRID
91 3098000
http://www.empresariosagrupados.es/

= E1

+ TMA-AZ-CS-CBT-0001

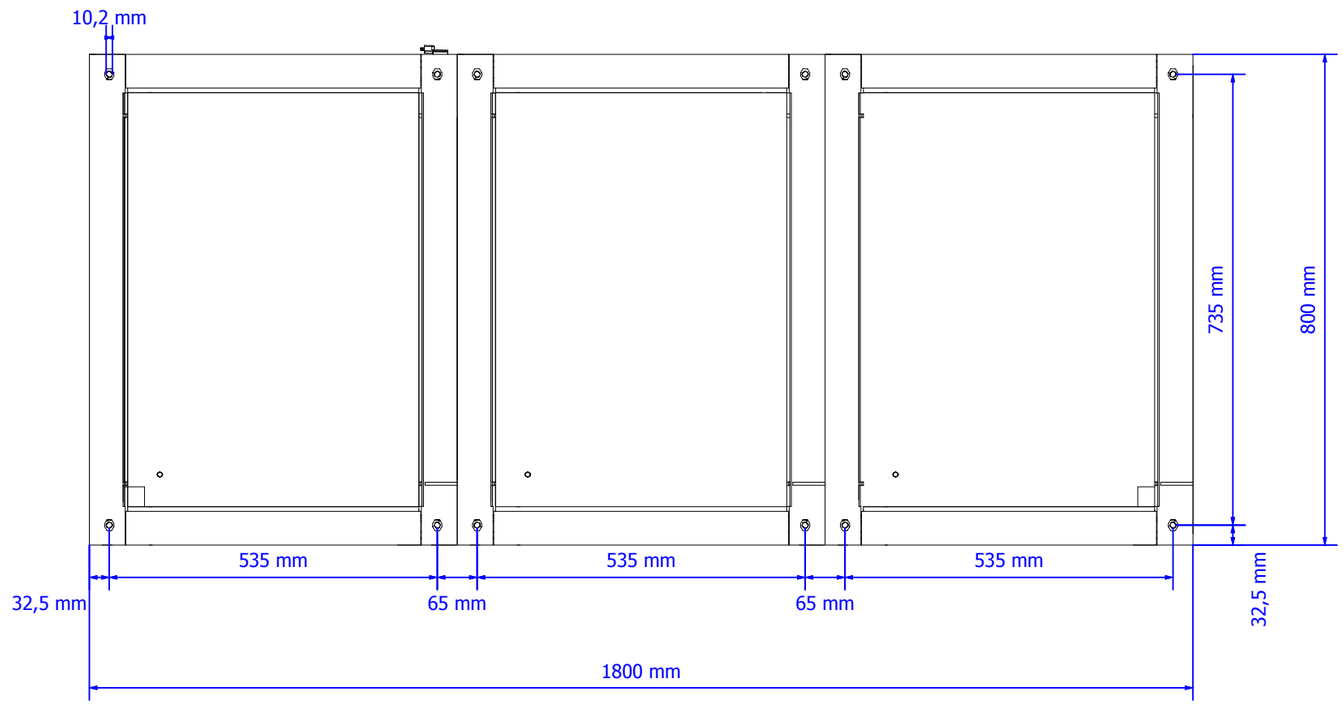

IK4 TEKNIKER Research Alliance

IK4-TEKNIKER
AVDA. OTAOLA 20
20600 Eibar (Gipuzkoa) Spain
Tfno.:(+34) 943 206744
Fax: (+34) 943 202757
Web: www.tekniker.es

Date	30/09/2016							
Reviewed	F.LÓPEZ	2.3	15/12/2017	JOSE MANUEL				
Drew by	jcastano	Review	Date	Name	Review	Date	Name	

3151_LSST

MCS Design Electrical Schematics

LSST TELESCOPE

Replaces | Replaced by

CABINET DIMENSIONS

Customer: EMPRESARIOS AGRUPADOS
C/Magallanes, 3
28015 MADRID
91 3098000
http://www.empresariosagrupados.es/

= E1

+ TMA-AZ-CS-CBT-0001

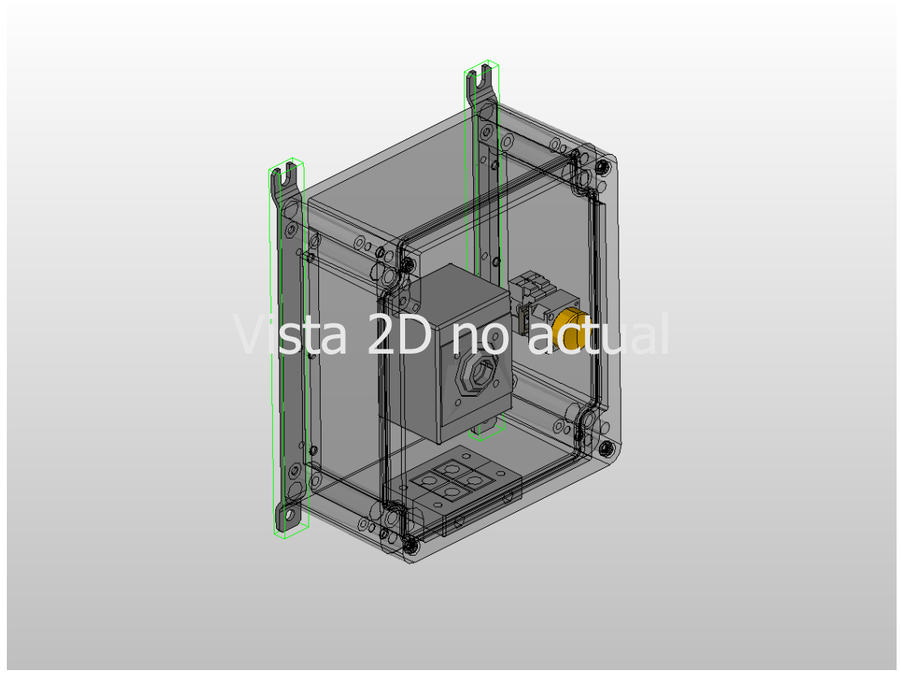

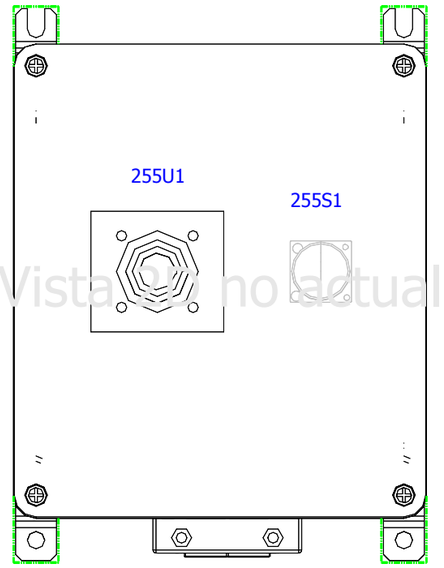

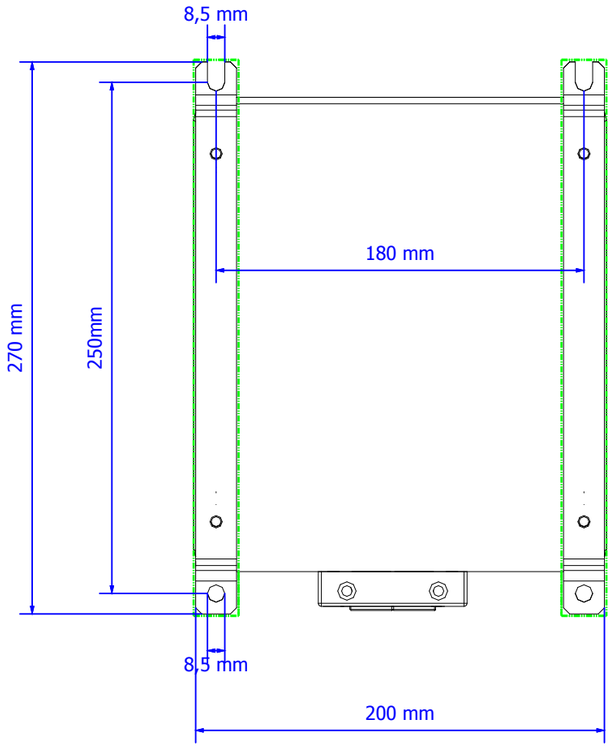

IK4 TEKNIKER Research Alliance
IK4-TEKNIKER
AVDA. OTAOLA 20
20600 Eibar (Gipuzkoa) Spain
Tfno.:(+34) 943 206744
Fax: (+34) 943 202757
Web: www.tekniker.es

Date	15/12/2017						
Reviewed	F.LÓPEZ	2.3	15/12/2017	JOSE MANUEL			
Drew by	JOSE MANUEL	Review	Date	Name	Review	Date	Name

3151_LSST

MCS Design Electrical Schematics

LSST TELESCOPE

Replaces | Replaced by

HANDHELD AZ +X

Customer: EMPRESARIOS AGRUPADOS

C/Magallanes, 3
28015 MADRID
91 3098000
http://www.empresariosagrupados.es/

= E1

+ TMA-AZ-CS-CBT-0001

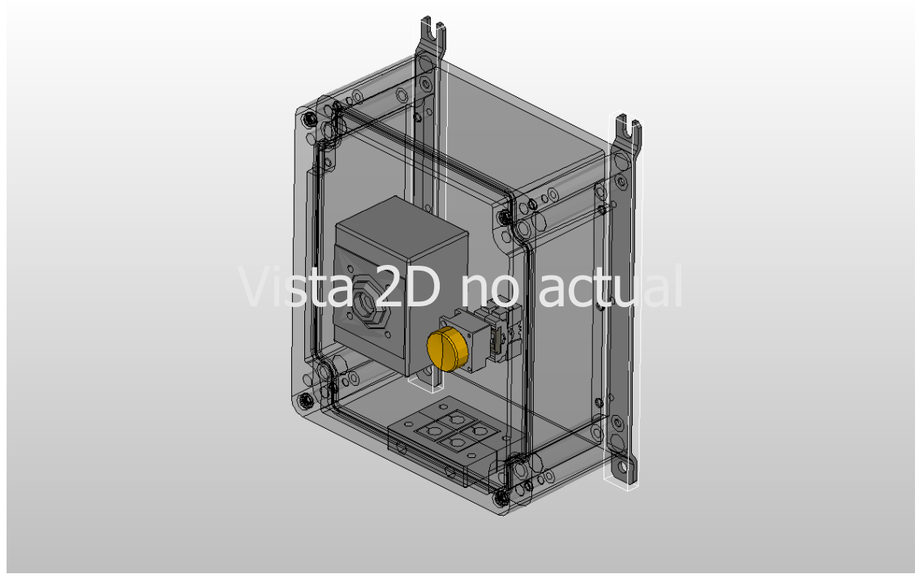

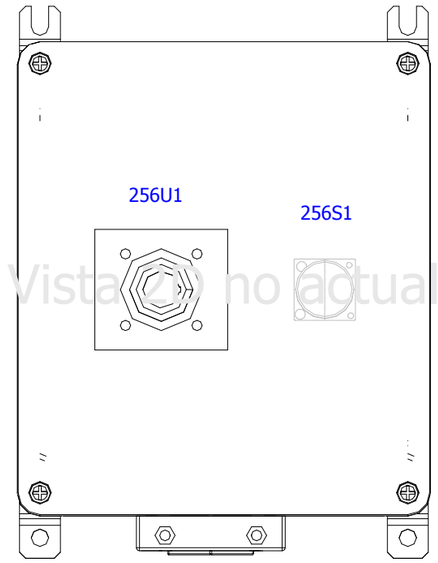

+TMA-AZ-CS-CBT-0101/001 ▷

IK4-TEKNIKER
AVDA. OTAOLA 20
20600 Eibar (Gipuzkoa) Spain
Tfno.:(+34) 943 206744
Fax: (+34) 943 202757
Web: www.tekniker.es

Date	15/12/2017						
Reviewed	F.LÓPEZ	2.3	15/12/2017	JOSE MANUEL			
Drew by	JOSE MANUEL	Review	Date	Name	Review	Date	Name

3151_LSST

MCS Design Electrical Schematics

LSST TELESCOPE

Replaces | Replaced by

HANDHELD AZ -X

Customer: EMPRESARIOS AGRUPADOS
C/Magallanes, 3
28015 MADRID
91 3098000
http://www.empresariosagrupados.es/

= E1
+ TMA-AZ-CS-CBT-0001

Customer

EMPRESARIOS AGRUPADOS

EMPRESARIOS AGRUPADOS

C/Magallanes, 3
28015 MADRID
ESPAÑA
91 3098000

http://www.empresariosagrupados.es/

Project:

3151_LSST

MCS Design Electrical Schematics

LSST TELESCOPE

E1
TMA

TMA-AZ-CS-CBT-0101
AUXILIARY AZIMUTH 1 BOX (-X)

Number of pages: 710

Made by:

IK4-TEKNIKER
AVDA. OTAOLA 20
20600 Eibar (Gipuzkoa) Spain
Tfno. : (+34) 943 206744
Fax : (+34) 943 202757
Web: www.tekniker.es

2.3	VERSION INTERMEDIA PARA MONTAJE ASTURFEITO (SIN EVALUACIONES)	15/12/2017	JOSE MANUEL
Review	Review description	Date	Reviewed

Drew by:	J.M.CASTAÑO
Reviewed:	F.LÓPEZ
Date:	16/12/2015
Replaces:	
Replaced by:	

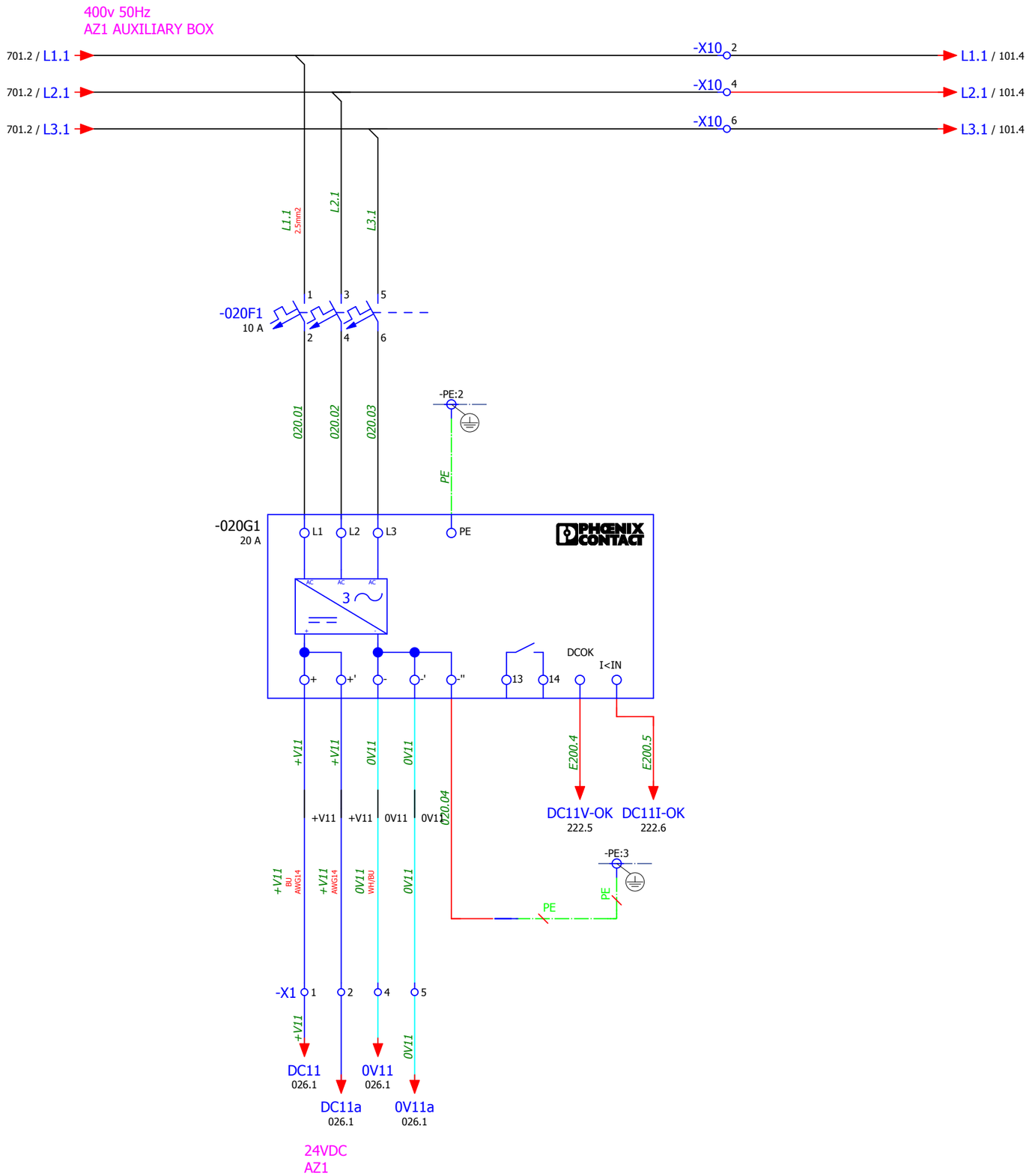

-X10 = FIELD terminal block

-X1 = distribution terminal block

-X12 = 4-20mA SENSORS

◁ 001

026 ▷

IK4-TEKNIKER
AVDA. OTAOLA 20
20600 Eibar (Gipuzkoa) Spain
Tfno.:(+34) 943 206744
Fax: (+34) 943 202757
Web: www.tekniker.es

Date	14/12/2017						
Reviewed	F.LÓPEZ	2.3	15/12/2017	JOSE MANUEL			
Drew by	JOSE MANUEL	Review	Date	Name	Review	Date	Name

3151_LSST

MCS Design Electrical Schematics

LSST TELESCOPE

Replaces | Replaced by

DC POWER

Customer: EMPRESARIOS AGRUPADOS
C/Magallanes, 3
28015 MADRID
91 3098000
http://www.empresariosagrupados.es/

= E1

+ TMA-AZ-CS-CBT-0101

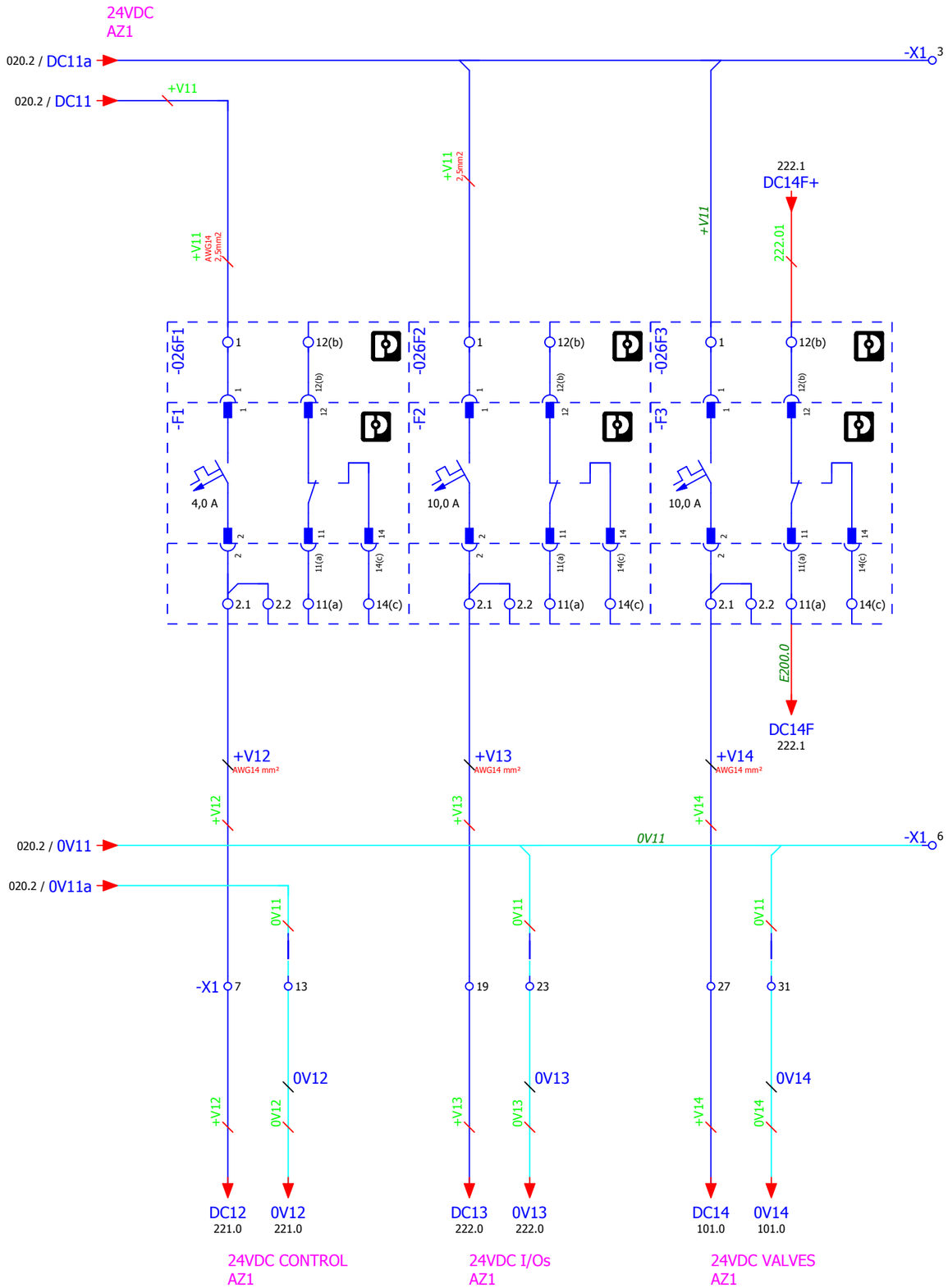

◁ 020

101 ▷

IK4-TEKNIKER
AVDA. OTAOLA 20
20600 Eibar (Gipuzkoa) Spain
Tfno.:(+34) 943 206744
Fax: (+34) 943 202757
Web: www.tekniker.es

Date	14/12/2017						
Reviewed	F.LÓPEZ	2.3	15/12/2017	JOSE MANUEL			
Drew by	JOSE MANUEL	Review	Date	Name	Review	Date	Name

3151_LSST

MCS Design Electrical Schematics

LSST TELESCOPE

Replaces | Replaced by

24 VDC DISTRIBUTION

Customer: EMPRESARIOS AGRUPADOS
C/Magallanes, 3
28015 MADRID
91 3098000
http://www.empresariosagrupados.es/

= E1
+ TMA-AZ-CS-CBT-0101

Page 026
Total number 710

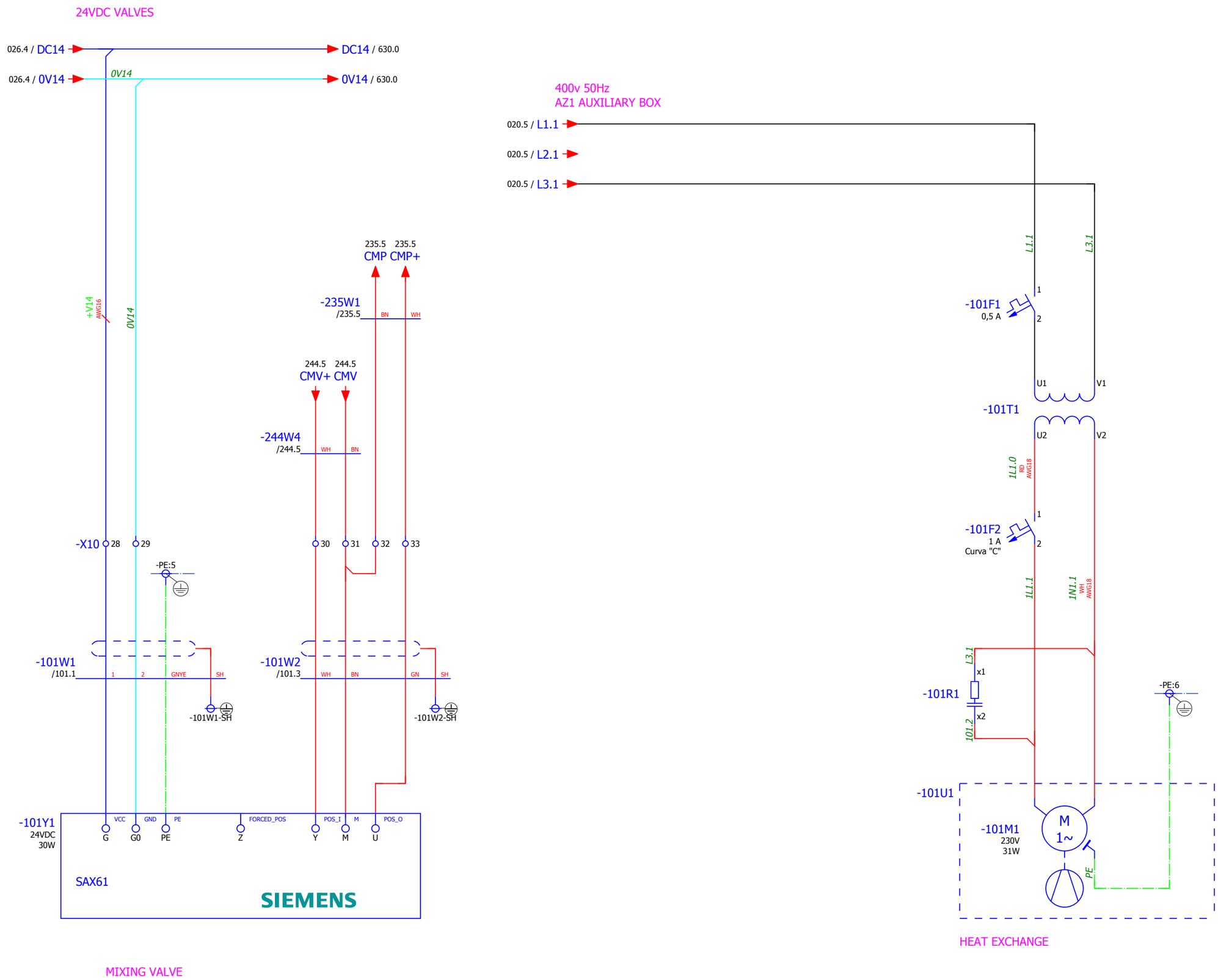

◁ 026

220 ▷

IK4 TEKNIKER Research Alliance
IK4-TEKNIKER
AVDA. OTAOLA 20
20600 Eibar (Gipuzkoa) Spain
Tfno.:(+34) 943 206744
Fax: (+34) 943 202757
Web: www.tekniker.es

Date	14/12/2017						
Reviewed	F.LÓPEZ	2.3	15/12/2017	JOSE MANUEL			
Drew by	JOSE MANUEL	Review	Date	Name	Review	Date	Name

3151_LSST
MCS Design Electrical Schematics
LSST TELESCOPE

Replaces | Replaced by

CABINET TEMPERATURE MODULE

Customer: EMPRESARIOS AGRUPADOS
C/Magallanes, 3
28015 MADRID
91 3098000
http://www.empresariosagrupados.es/

= E1
+ TMA-AZ-CS-CBT-0101

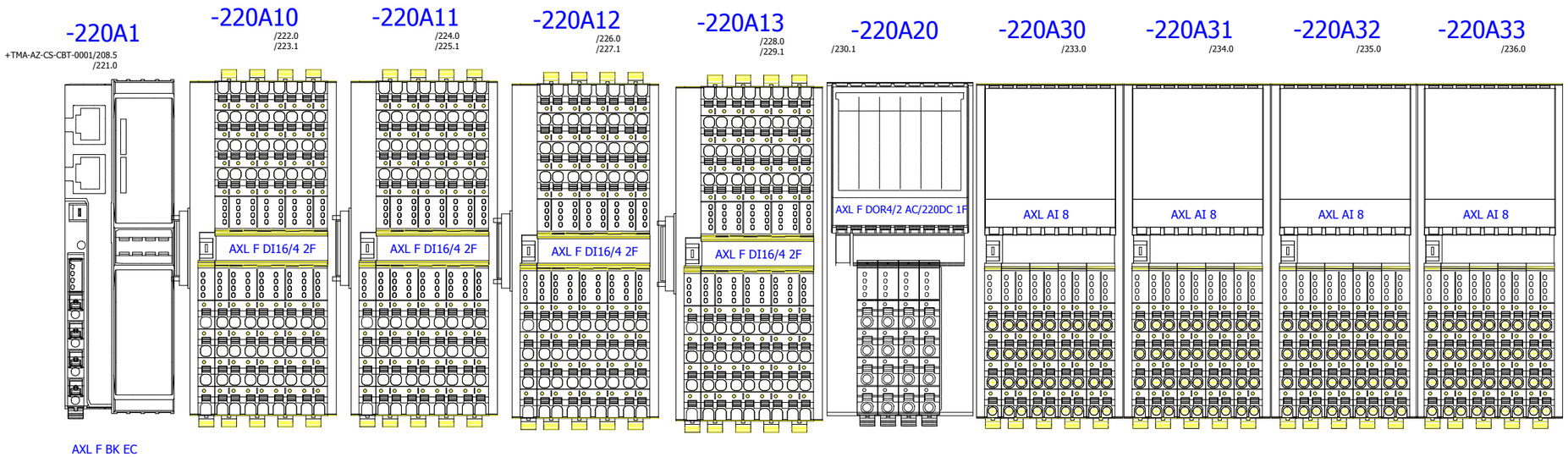

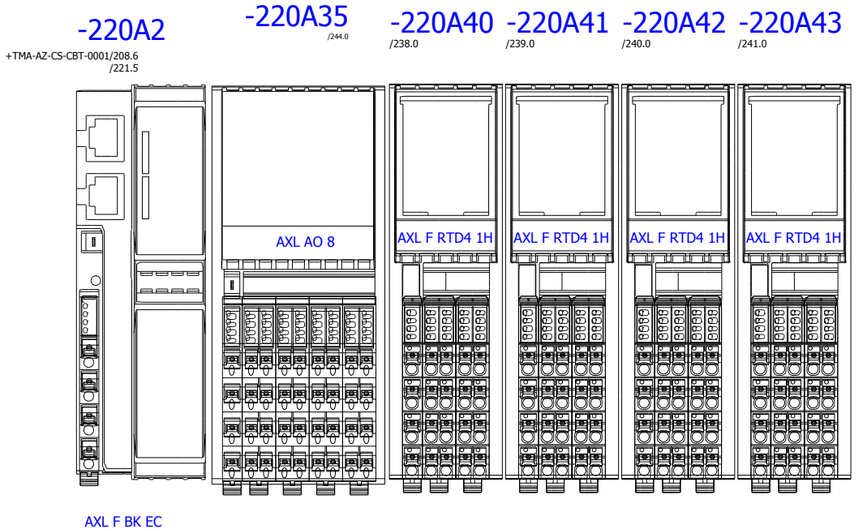

IK4 TEKNIKER Research Alliance

IK4-TEKNIKER
AVDA. OTAOLA 20
20600 Eibar (Gipuzkoa) Spain
Tfno.:(+34) 943 206744
Fax: (+34) 943 202757
Web: www.tekniker.es

Date	22/03/2017							
Reviewed	F.LÓPEZ	2.3	15/12/2017	JOSE MANUEL				
Drew by	jcastano	Review	Date	Name	Review	Date	Name	

3151_LSST — MCS Design Electrical Schematics

LSST TELESCOPE

Replaces | Replaced by

DISTRIBUTED IOs

Customer: EMPRESARIOS AGRUPADOS
C/Magallanes, 3
28015 MADRID
91 3098000
http://www.empresariosagrupados.es/

= E1

+ TMA-AZ-CS-CBT-0101

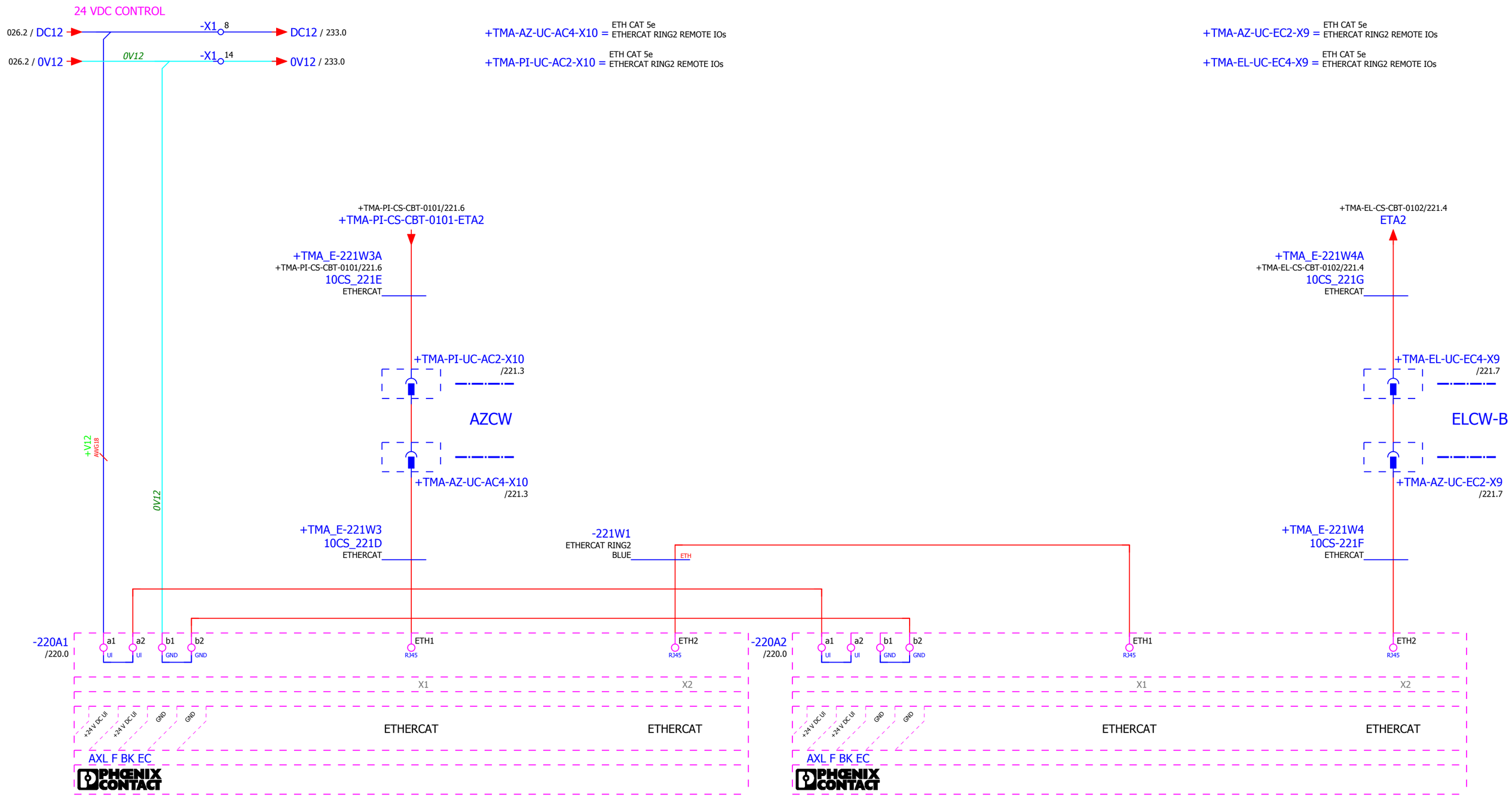

IK4 TEKNIKER Research Alliance

IK4-TEKNIKER
AVDA. OTAOLA 20
20600 Eibar (Gipuzkoa) Spain
Tfno.:(+34) 943 206744
Fax: (+34) 943 202757
Web: www.tekniker.es

Date	15/12/2017						
Reviewed	F.LÓPEZ	2.3	15/12/2017	JOSE MANUEL			
Drew by	JOSE MANUEL	Review	Date	Name	Review	Date	Name

3151_LSST

MCS Design Electrical Schematics

LSST TELESCOPE

Replaces | Replaced by

DISTRIBUTED IOs POWER & ETHERCAT

Customer: EMPRESARIOS AGRUPADOS

C/Magallanes, 3
28015 MADRID
91 3098000
http://www.empresariosagrupados.es/

= E1

+ TMA-AZ-CS-CBT-0101

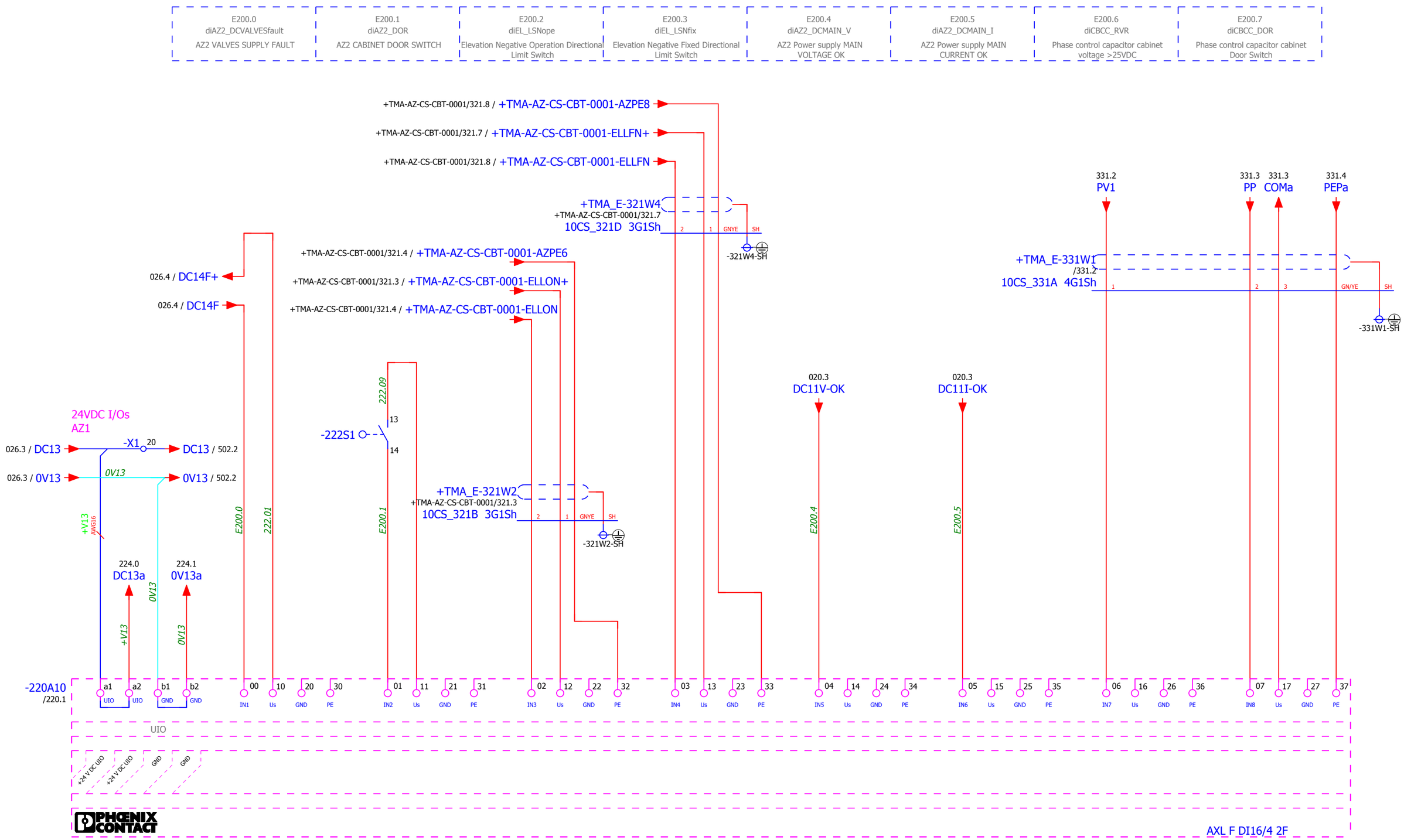

IK4 TEKNIKER Research Alliance

IK4-TEKNIKER
AVDA. OTAOLA 20
20600 Eibar (Gipuzkoa) Spain
Tfno.:(+34) 943 206744
Fax: (+34) 943 202757
Web: www.tekniker.es

Date	15/12/2017						
Reviewed	F.LÓPEZ	2.3	15/12/2017	JOSE MANUEL			
Drew by	JOSE MANUEL	Review	Date	Name	Review	Date	Name

3151_LSST

MCS Design Electrical Schematics

LSST TELESCOPE

Replaces | Replaced by

DISTRIBUTED DIGITAL INPUT MODULE

Customer: EMPRESARIOS AGRUPADOS
C/Magallanes, 3
28015 MADRID
91 3098000
http://www.empresariosagrupados.es/

= E1

+ TMA-AZ-CS-CBT-0101

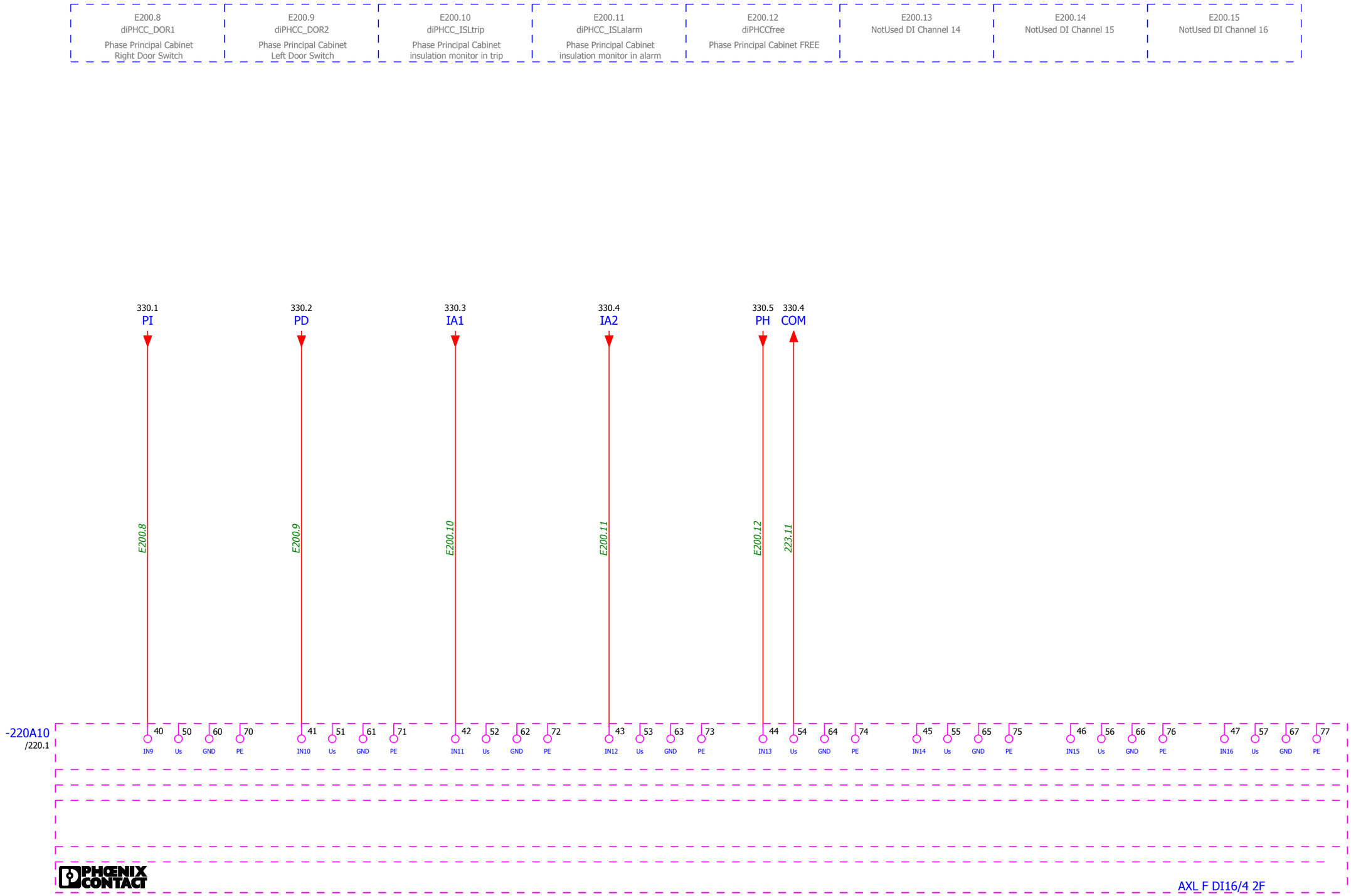

IK4 TEKNIKER Research Alliance

IK4-TEKNIKER
AVDA. OTAOLA 20
20600 Eibar (Gipuzkoa) Spain
Tfno.:(+34) 943 206744
Fax: (+34) 943 202757
Web: www.tekniker.es

Date	01/12/2017						
Reviewed	F.LÓPEZ	2.3	15/12/2017	JOSE MANUEL			
Drew by	JOSE MANUEL	Review	Date	Name	Review	Date	Name

3151_LSST

MCS Design Electrical Schematics

LSST TELESCOPE

Replaces | Replaced by

DISTRIBUTED DIGITAL INPUT MODULE

Customer: EMPRESARIOS AGRUPADOS

C/Magallanes, 3
28015 MADRID
91 3098000

http://www.empresariosagrupados.es/

= E1

+ TMA-AZ-CS-CBT-0101

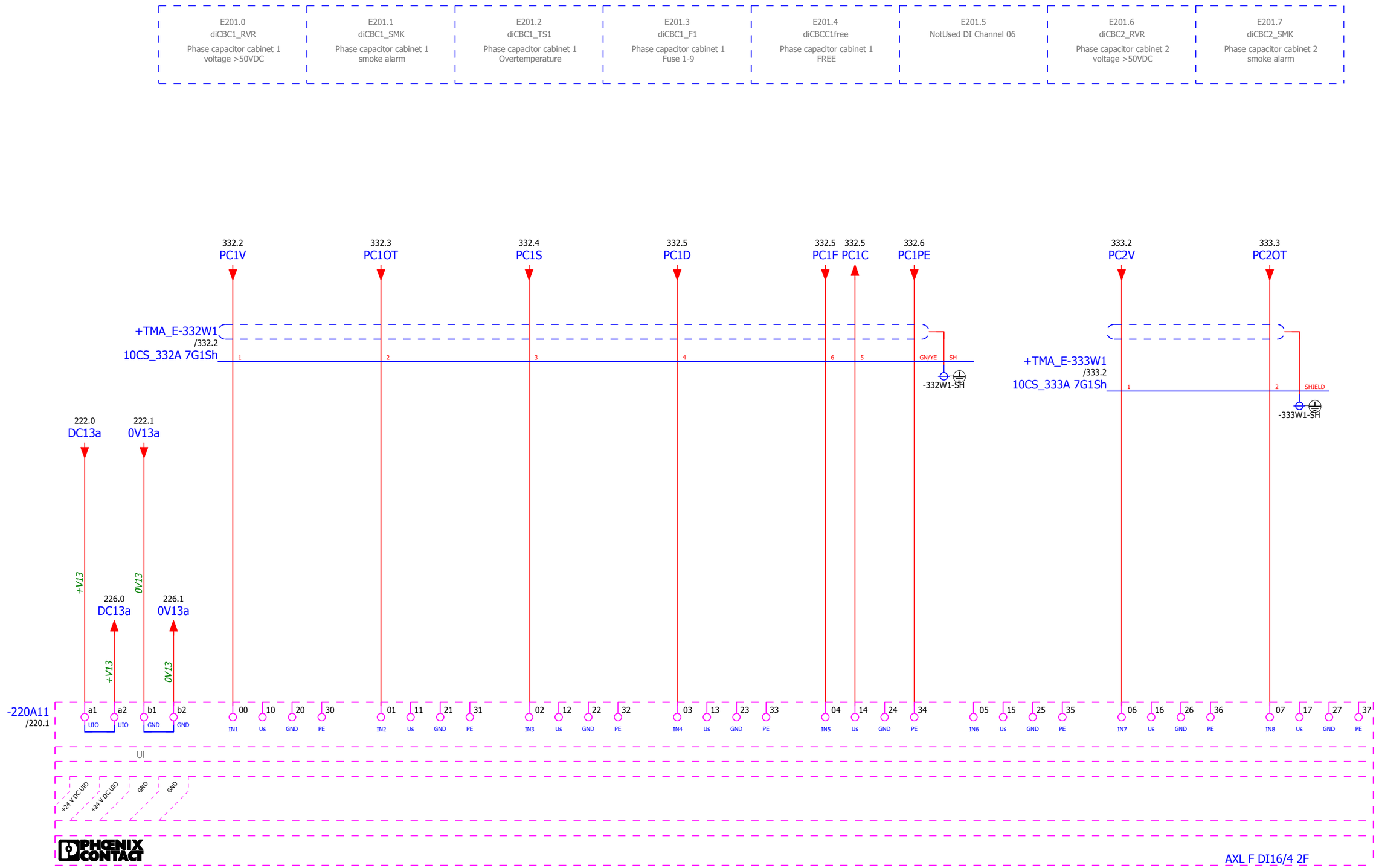

IK4-TEKNIKER
AVDA. OTAOLA 20
20600 Eibar (Gipuzkoa) Spain
Tfno.:(+34) 943 206744
Fax: (+34) 943 202757
Web: www.tekniker.es

Date	15/12/2017						
Reviewed	F.LÓPEZ	2.3	15/12/2017	JOSE MANUEL			
Drew by	JOSE MANUEL	Review	Date	Name	Review	Date	Name

3151_LSST
MCS Design Electrical Schematics
LSST TELESCOPE

Replaces | Replaced by

DISTRIBUTED DIGITAL INPUT MODULE

Customer:
EMPRESARIOS AGRUPADOS
C/Magallanes, 3
28015 MADRID
91 3098000
http://www.empresariosagrupados.es/

= E1
+ TMA-AZ-CS-CBT-0101

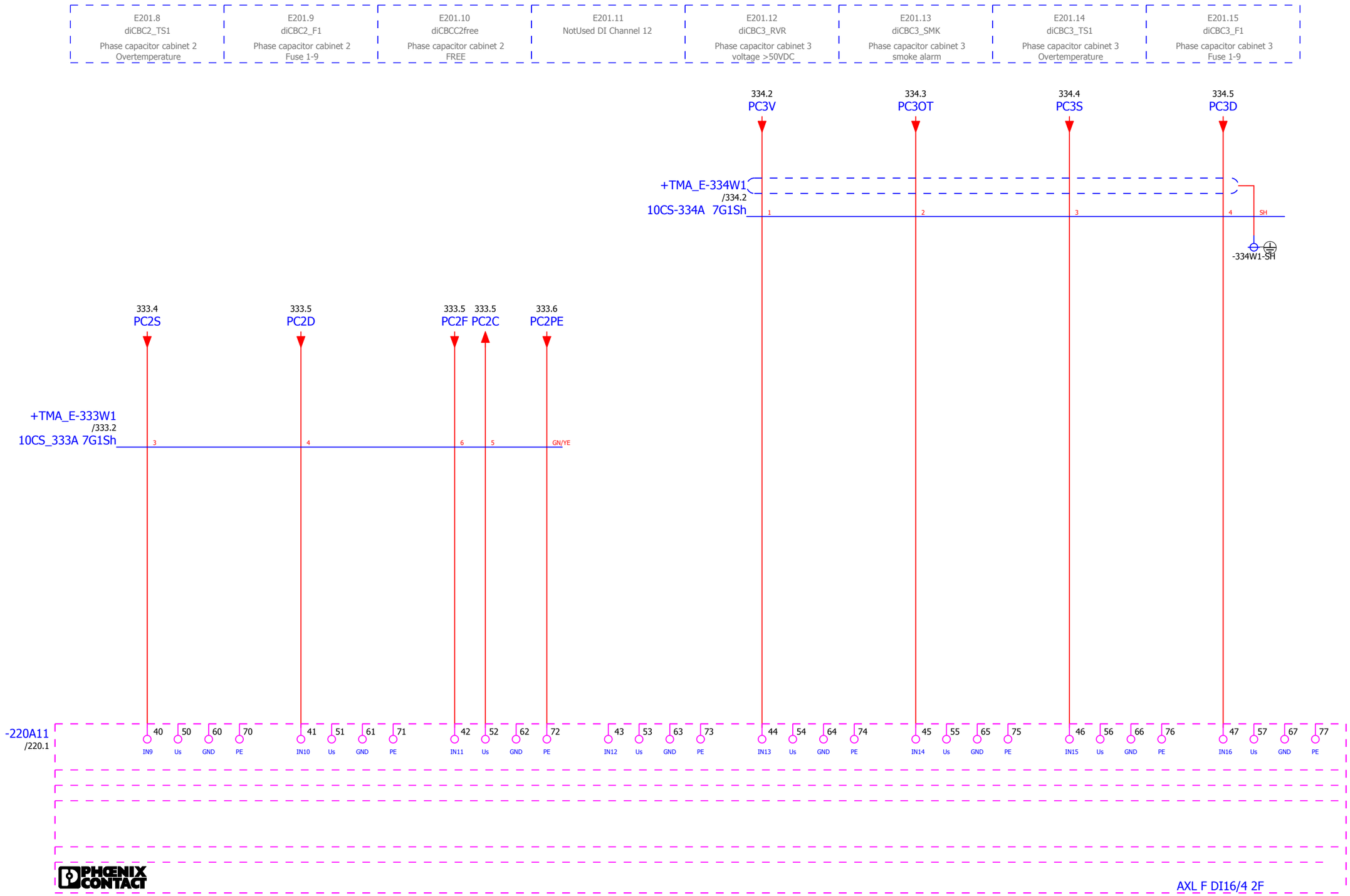

IK4 TEKNIKER Research Alliance

IK4-TEKNIKER
AVDA. OTAOLA 20
20600 Eibar (Gipuzkoa) Spain
Tfno.:(+34) 943 206744
Fax: (+34) 943 202757
Web: www.tekniker.es

Date	15/12/2017						
Reviewed	F.LÓPEZ	2.3	15/12/2017	JOSE MANUEL			
Drew by	JOSE MANUEL	Review	Date	Name	Review	Date	Name

3151_LSST

MCS Design Electrical Schematics

LSST TELESCOPE

Replaces

Replaced by

DISTRIBUTED DIGITAL INPUT MODULE

Customer:
EMPRESARIOS AGRUPADOS
C/Magallanes, 3
28015 MADRID
91 3098000
http://www.empresariosagrupados.es/

= E1

+ TMA-AZ-CS-CBT-0101

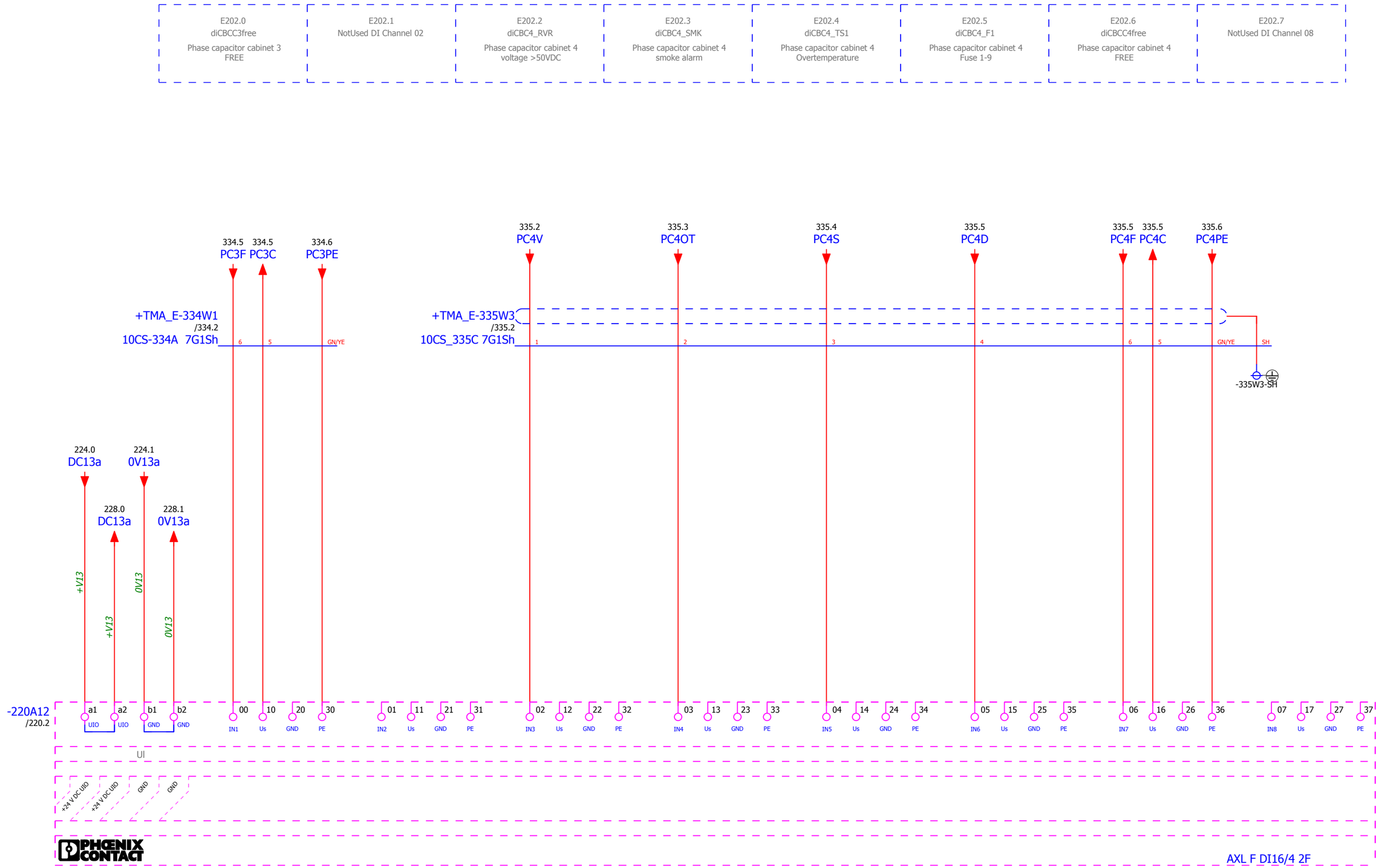

IK4 TEKNIKER Research Alliance
IK4-TEKNIKER
AVDA. OTAOLA 20
20600 Eibar (Gipuzkoa) Spain
Tfno.:(+34) 943 206744
Fax: (+34) 943 202757
Web: www.tekniker.es

Date	15/12/2017						
Reviewed	F.LÓPEZ	2.3	15/12/2017	JOSE MANUEL			
Drew by	JOSE MANUEL	Review	Date	Name	Review	Date	Name

3151_LSST
MCS Design Electrical Schematics
LSST TELESCOPE
Replaces
Replaced by

DISTRIBUTED DIGITAL INPUT MODULE

Customer: EMPRESARIOS AGRUPADOS
C/Magallanes, 3
28015 MADRID
91 3098000
http://www.empresariosagrupados.es/

= E1
+ TMA-AZ-CS-CBT-0101

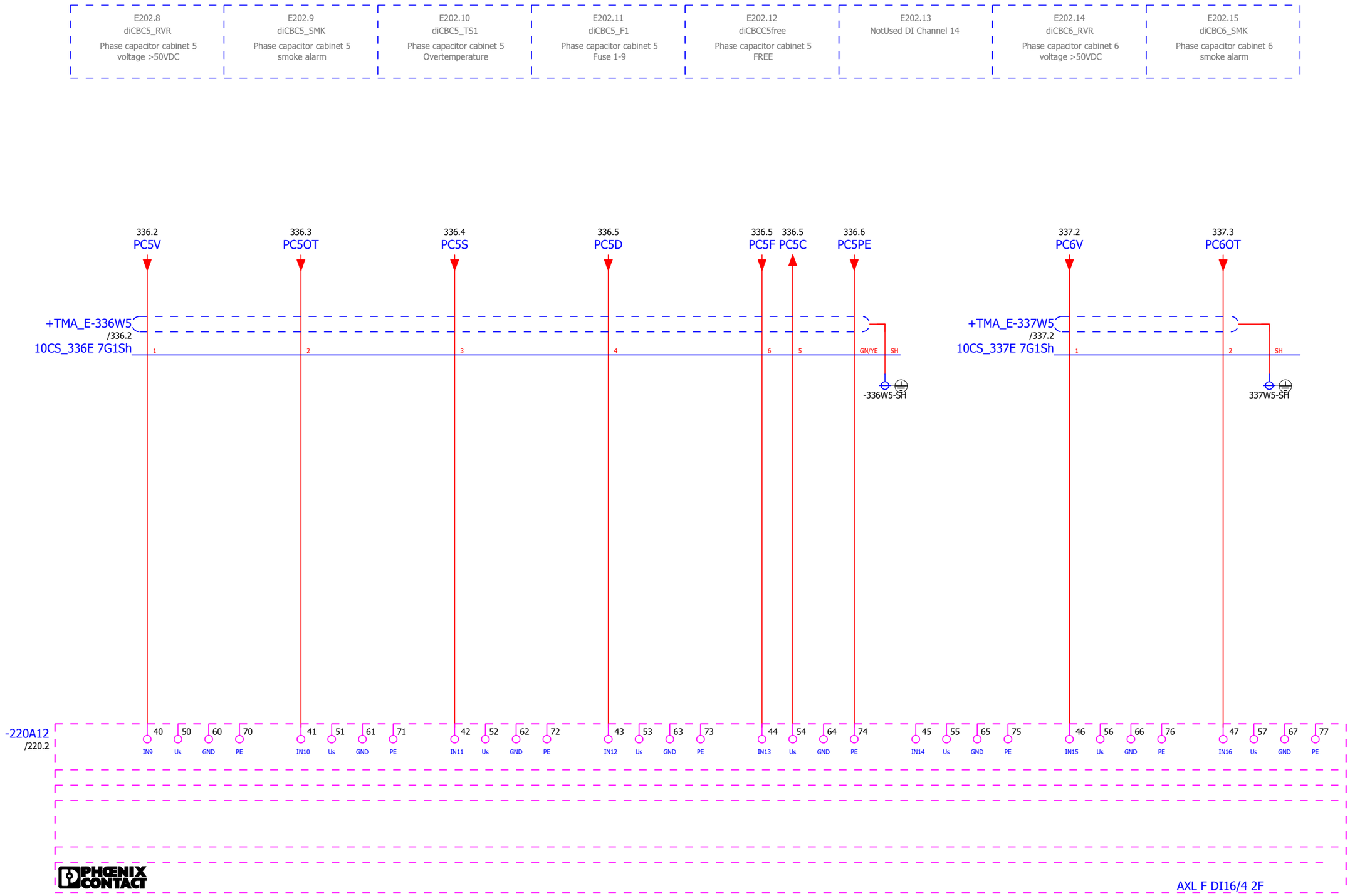

IK4 TEKNIKER Research Alliance
IK4-TEKNIKER
AVDA. OTAOLA 20
20600 Eibar (Gipuzkoa) Spain
Tfno.:(+34) 943 206744
Fax: (+34) 943 202757
Web: www.tekniker.es

Date	15/12/2017						
Reviewed	F.LÓPEZ	2.3	15/12/2017	JOSE MANUEL			
Drew by	JOSE MANUEL	Review	Date	Name	Review	Date	Name

3151_LSST
MCS Design Electrical Schematics
LSST TELESCOPE

Replaces | Replaced by

DISTRIBUTED DIGITAL INPUT MODULE

Customer: EMPRESARIOS AGRUPADOS
C/Magallanes, 3
28015 MADRID
91 3098000
http://www.empresariosagrupados.es/

= E1
+ TMA-AZ-CS-CBT-0101

E203.0	E203.1	E203.2	E203.3	E203.4	E203.5	E203.6	E203.7
diCBC6_TS1	diCBC6_F1	diCBCC6free	NotUsed DI Channel 04	diCBC7_RVR	diCBC7_SMK	diCBC7_TS1	diCBC7_F1
Phase capacitor cabinet 6 Overtemperature	Phase capacitor cabinet 6 Fuse 1-9	Phase capacitor cabinet 6 FREE		Phase capacitor cabinet 7 voltage >50VDC	Phase capacitor cabinet 7 smoke alarm	Phase capacitor cabinet 7 Overtemperature	Phase capacitor cabinet 7 Fuse 1-9

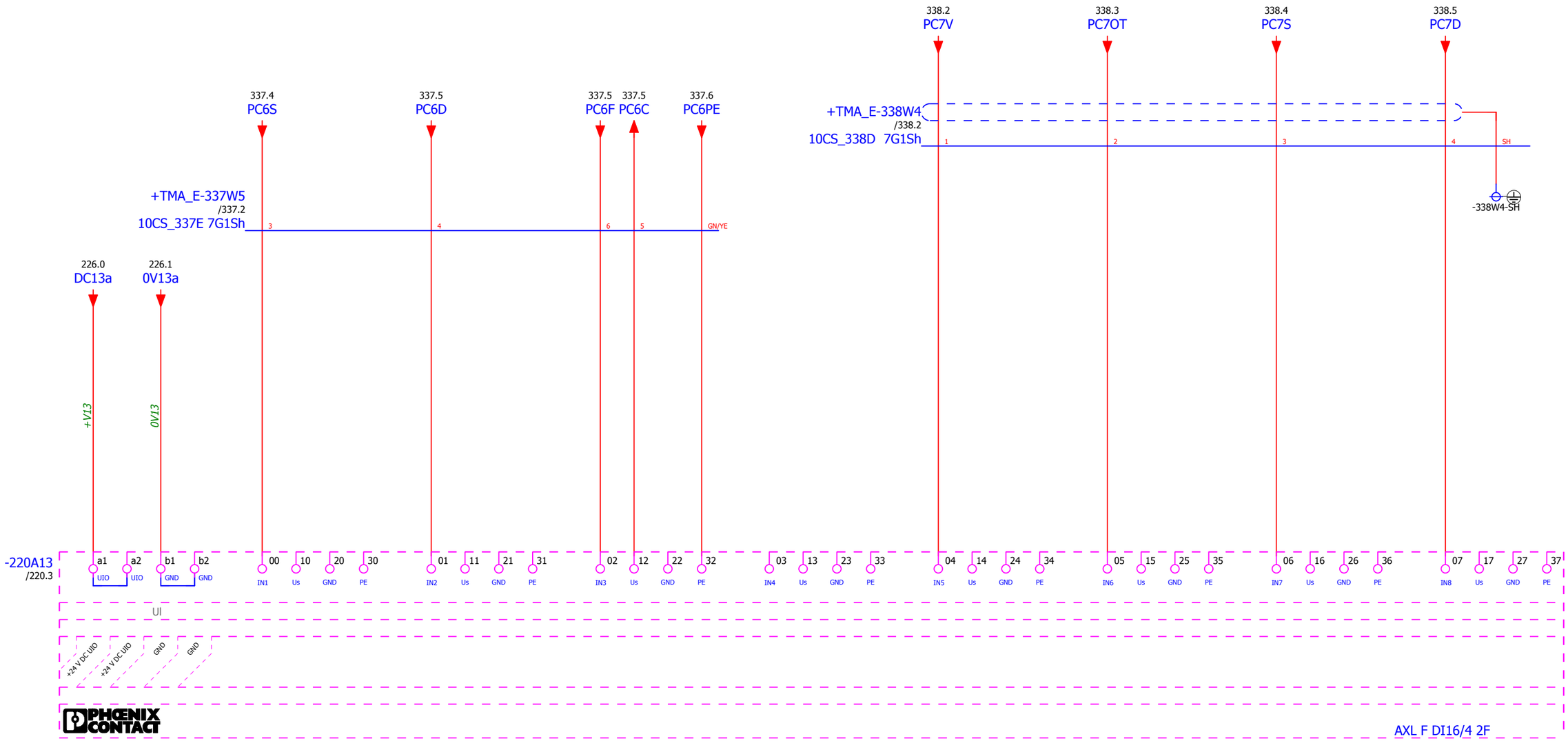

IK4-TEKNIKER
AVDA. OTAOLA 20
20600 Eibar (Gipuzkoa) Spain
Tfno.:(+34) 943 206744
Fax: (+34) 943 202757
Web: www.tekniker.es

Date	15/12/2017						
Reviewed	F.LÓPEZ	2.3	15/12/2017	JOSE MANUEL			
Drew by	JOSE MANUEL	Review	Date	Name	Review	Date	Name

3151_LSST
MCS Design Electrical Schematics
LSST TELESCOPE

Replaces | Replaced by

DISTRIBUTED DIGITAL INPUT MODULE

Customer: EMPRESARIOS AGRUPADOS
C/Magallanes, 3
28015 MADRID
91 3098000
http://www.empresariosagrupados.es/

= E1
+ TMA-AZ-CS-CBT-0101

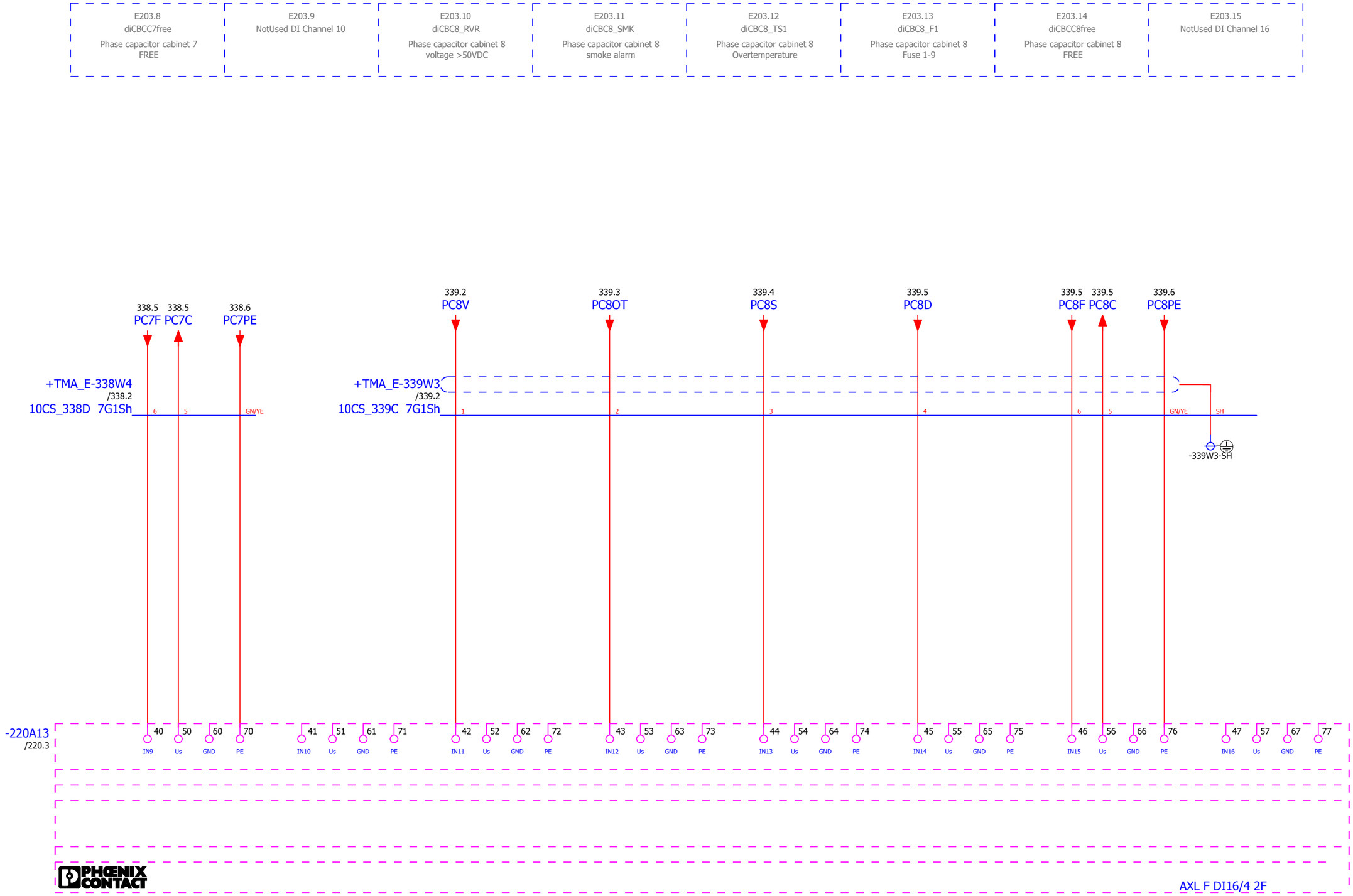

IK4 TEKNIKER Research Alliance
IK4-TEKNIKER
AVDA. OTAOLA 20
20600 Eibar (Gipuzkoa) Spain
Tfno.:(+34) 943 206744
Fax: (+34) 943 202757
Web: www.tekniker.es

Date	15/12/2017						
Reviewed	F.LÓPEZ	2.3	15/12/2017	JOSE MANUEL			
Drew by	JOSE MANUEL	Review	Date	Name	Review	Date	Name

3151_LSST
MCS Design Electrical Schematics
LSST TELESCOPE
Replaces
Replaced by

DISTRIBUTED DIGITAL INPUT MODULE

Customer:
EMPRESARIOS AGRUPADOS
C/Magallanes, 3
28015 MADRID
91 3098000
http://www.empresariosagrupados.es/

= E1
+ TMA-AZ-CS-CBT-0101

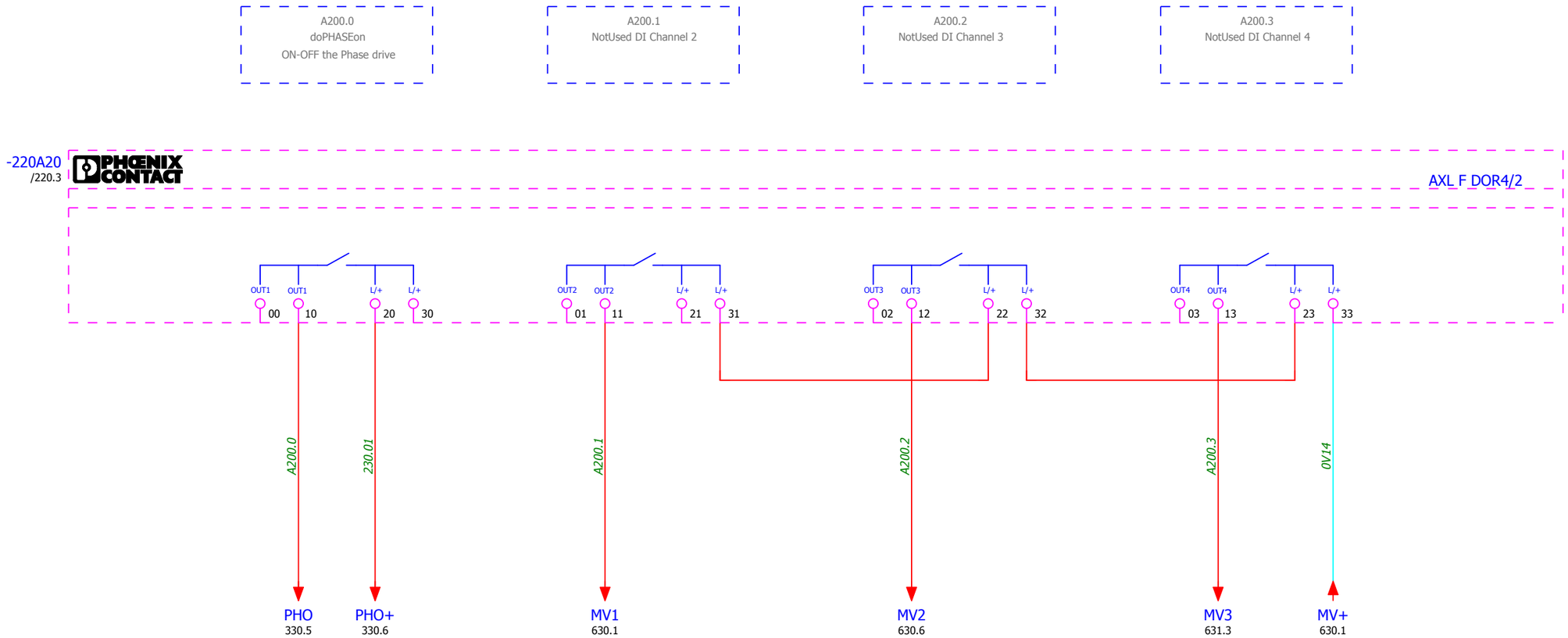

IK4-TEKNIKER
AVDA. OTAOLA 20
20600 Eibar (Gipuzkoa) Spain
Tfno.:(+34) 943 206744
Fax: (+34) 943 202757
Web: www.tekniker.es

Date	15/12/2017						
Reviewed	F.LÓPEZ	2.3	15/12/2017	JOSE MANUEL			
Drew by	JOSE MANUEL	Review	Date	Name	Review	Date	Name

3151_LSST
MCS Design Electrical Schematics
LSST TELESCOPE

Replaces | Replaced by

DISTRIBUTED DIGITAL OUTPUT MODULE

Customer: EMPRESARIOS AGRUPADOS
C/Magallanes, 3
28015 MADRID
91 3098000
http://www.empresariosagrupados.es/

= E1
+ TMA-AZ-CS-CBT-0101

Page 230
Total number 710

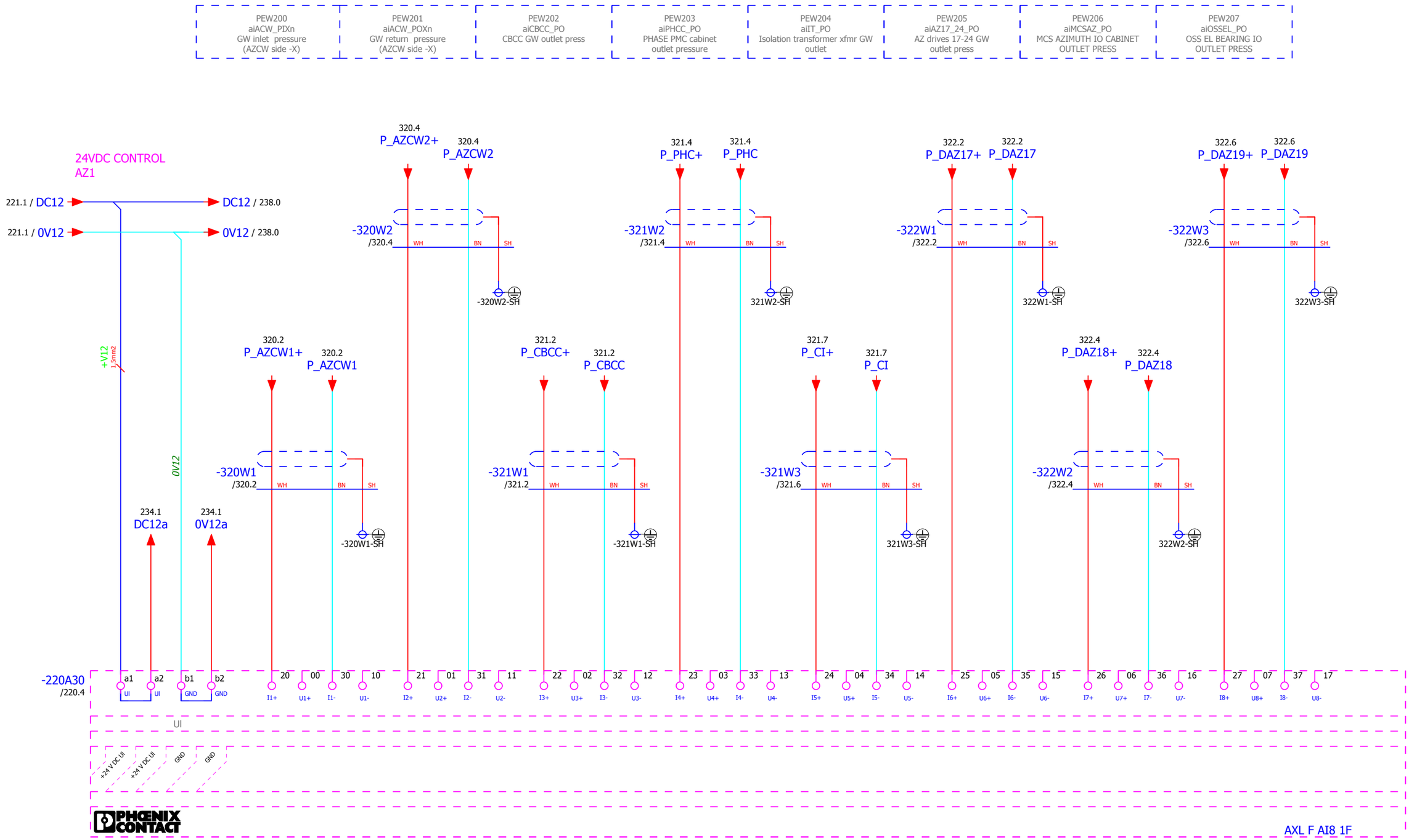

IK4 TEKNIKER Research Alliance

IK4-TEKNIKER
AVDA. OTAOLA 20
20600 Eibar (Gipuzkoa) Spain
Tfno.:(+34) 943 206744
Fax: (+34) 943 202757
Web: www.tekniker.es

Date	15/12/2017						
Reviewed	F.LÓPEZ	2.3	15/12/2017	JOSE MANUEL			
Drew by	JOSE MANUEL	Review	Date	Name	Review	Date	Name

3151_LSST

MCS Design Electrical Schematics

LSST TELESCOPE

Replaces | Replaced by

DISTRIBUTED ANALOG INPUT MODULE

Customer: EMPRESARIOS AGRUPADOS

C/Magallanes, 3
28015 MADRID
91 3098000

http://www.empresariosagrupados.es/

= E1

+ TMA-AZ-CS-CBT-0101

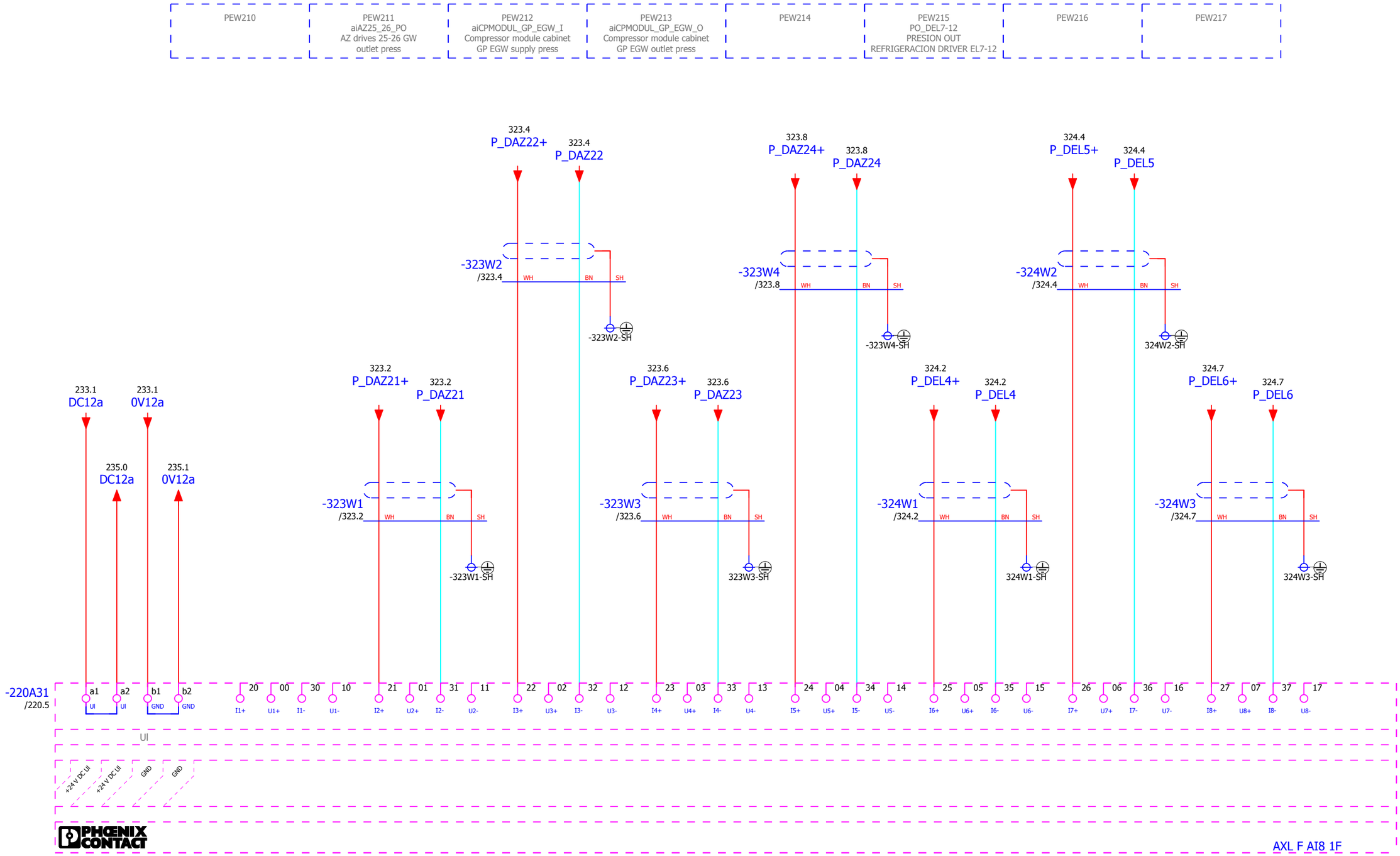

IK4 TEKNIKER Research Alliance
IK4-TEKNIKER
AVDA. OTAOLA 20
20600 Eibar (Gipuzkoa) Spain
Tfno.:(+34) 943 206744
Fax: (+34) 943 202757
Web: www.tekniker.es

Date	15/12/2017						
Reviewed	F.LÓPEZ	2.3	15/12/2017	JOSE MANUEL			
Drew by	JOSE MANUEL	Review	Date	Name	Review	Date	Name

3151_LSST
MCS Design Electrical Schematics
LSST TELESCOPE

Replaces | Replaced by

DISTRIBUTED ANALOG INPUT MODULE

Customer: EMPRESARIOS AGRUPADOS
C/Magallanes, 3
28015 MADRID
91 3098000
http://www.empresariosagrupados.es/

= E1
+ TMA-AZ-CS-CBT-0101

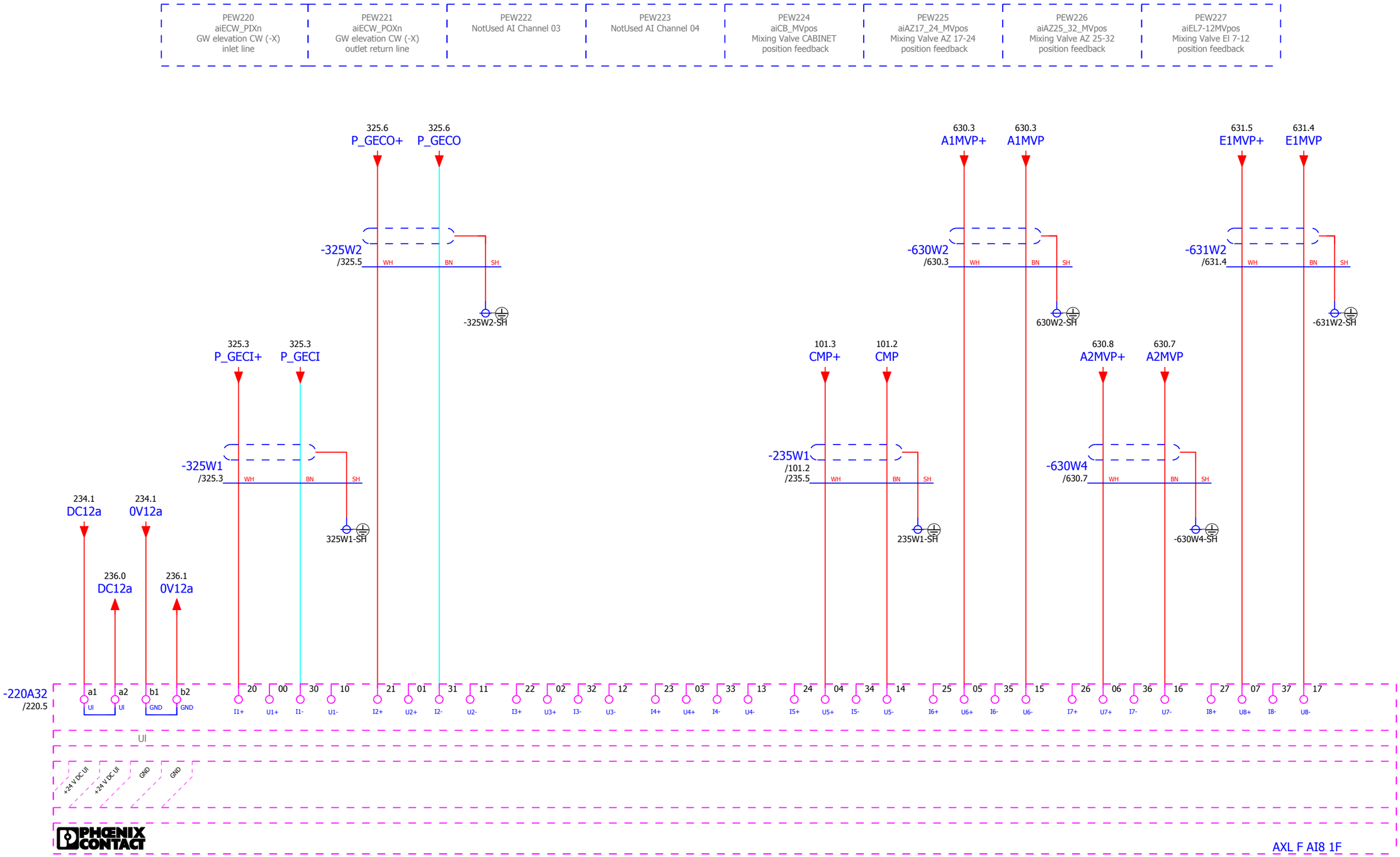

IK4 TEKNIKER Research Alliance

IK4-TEKNIKER
AVDA. OTAOLA 20
20600 Eibar (Gipuzkoa) Spain
Tfno.:(+34) 943 206744
Fax: (+34) 943 202757
Web: www.tekniker.es

Date	14/12/2017						
Reviewed	F.LÓPEZ	2.3	15/12/2017	JOSE MANUEL			
Drew by	JOSE MANUEL	Review	Date	Name	Review	Date	Name

3151_LSST

MCS Design Electrical Schematics

LSST TELESCOPE

Replaces | Replaced by

DISTRIBUTED ANALOG INPUT MODULE

Customer: EMPRESARIOS AGRUPADOS
C/Magallanes, 3
28015 MADRID
91 3098000
http://www.empresariosagrupados.es/

= E1

+ TMA-AZ-CS-CBT-0101

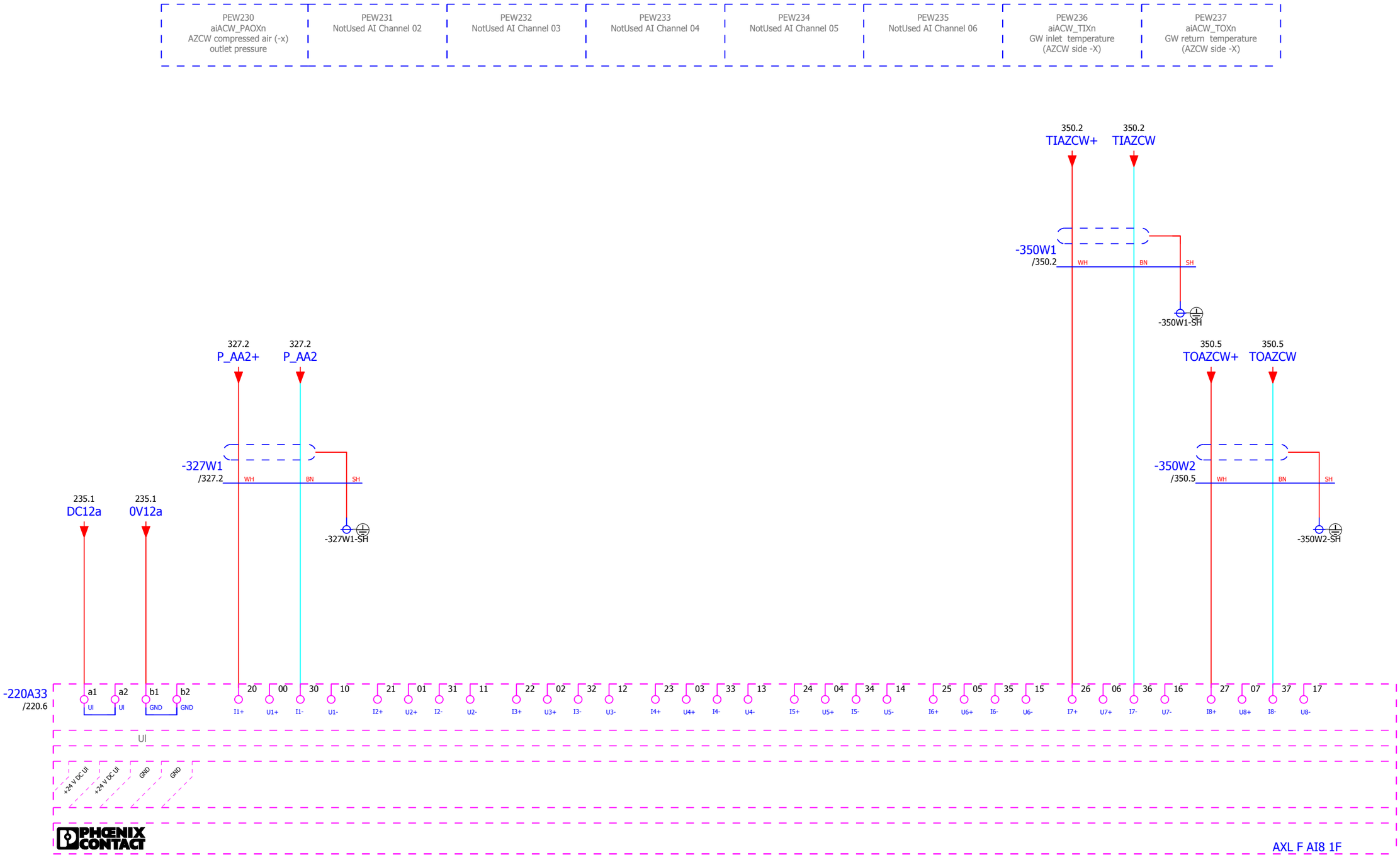

IK4 TEKNIKER Research Alliance

IK4-TEKNIKER
AVDA. OTAOLA 20
20600 Eibar (Gipuzkoa) Spain
Tfno.:(+34) 943 206744
Fax: (+34) 943 202757
Web: www.tekniker.es

Date	01/12/2017						
Reviewed	F.LÓPEZ	2.3	15/12/2017	JOSE MANUEL			
Drew by	JOSE MANUEL	Review	Date	Name	Review	Date	Name

3151_LSST

MCS Design Electrical Schematics

LSST TELESCOPE

Replaces | Replaced by

DISTRIBUTED ANALOG INPUT MODULE

Customer: EMPRESARIOS AGRUPADOS
C/Magallanes, 3
28015 MADRID
91 3098000
http://www.empresariosagrupados.es/

= E1

+ TMA-AZ-CS-CBT-0101

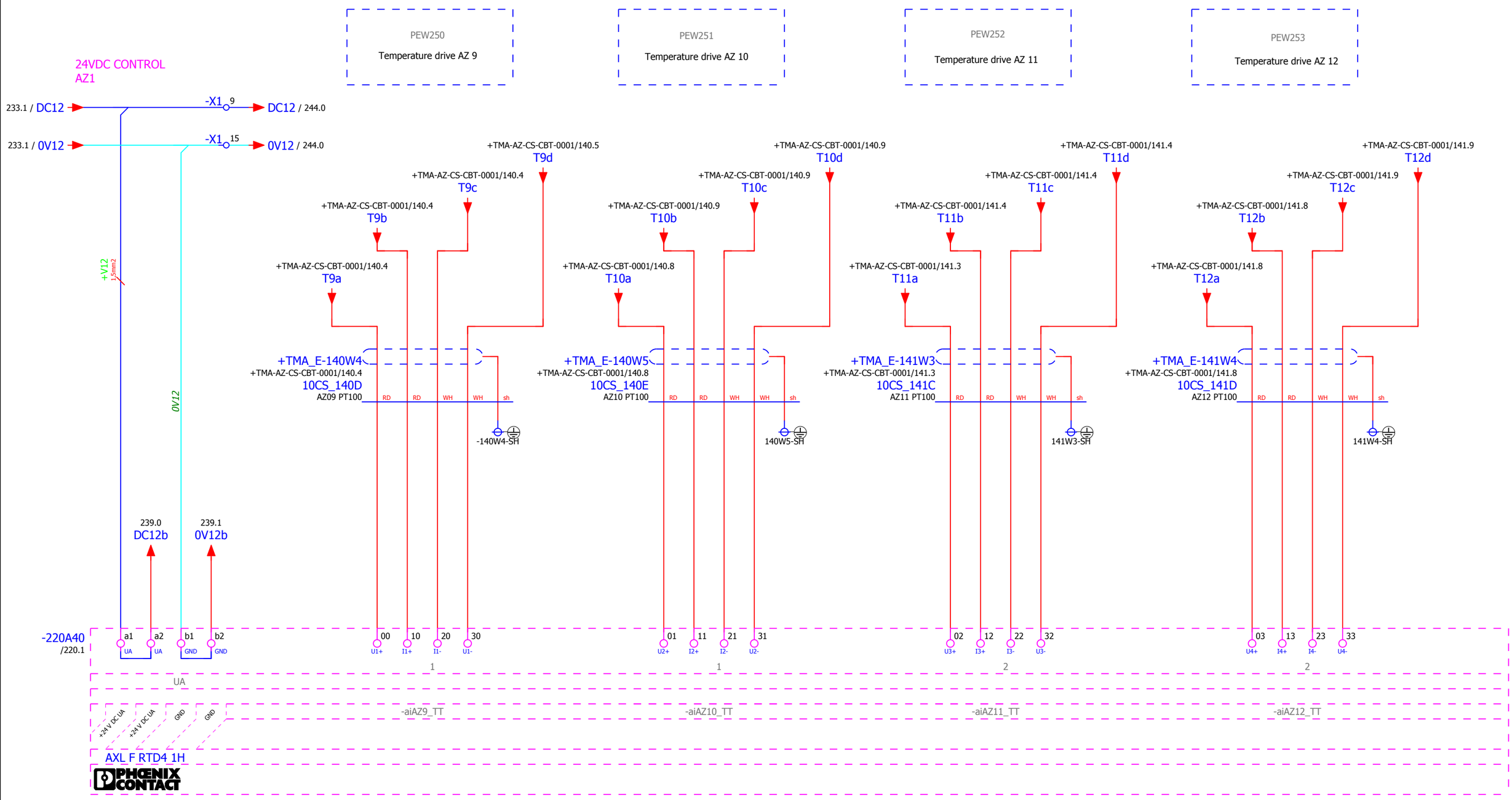

◁ 236

239 ▷

IK4 TEKNIKER Research Alliance
IK4-TEKNIKER
AVDA. OTAOLA 20
20600 Eibar (Gipuzkoa) Spain
Tfno.:(+34) 943 206744
Fax: (+34) 943 202757
Web: www.tekniker.es

Date	15/12/2017						
Reviewed	F.LÓPEZ	2.3	15/12/2017	JOSE MANUEL			
Drew by	JOSE MANUEL	Review	Date	Name	Review	Date	Name

3151_LSST
MCS Design Electrical Schematics
LSST TELESCOPE
Replaces
Replaced by

DISTRIBUTED TEMPERATURE INPUT MODULE

Customer: EMPRESARIOS AGRUPADOS
C/Magallanes, 3
28015 MADRID
91 3098000
http://www.empresariosagrupados.es/

= E1
+ TMA-AZ-CS-CBT-0101

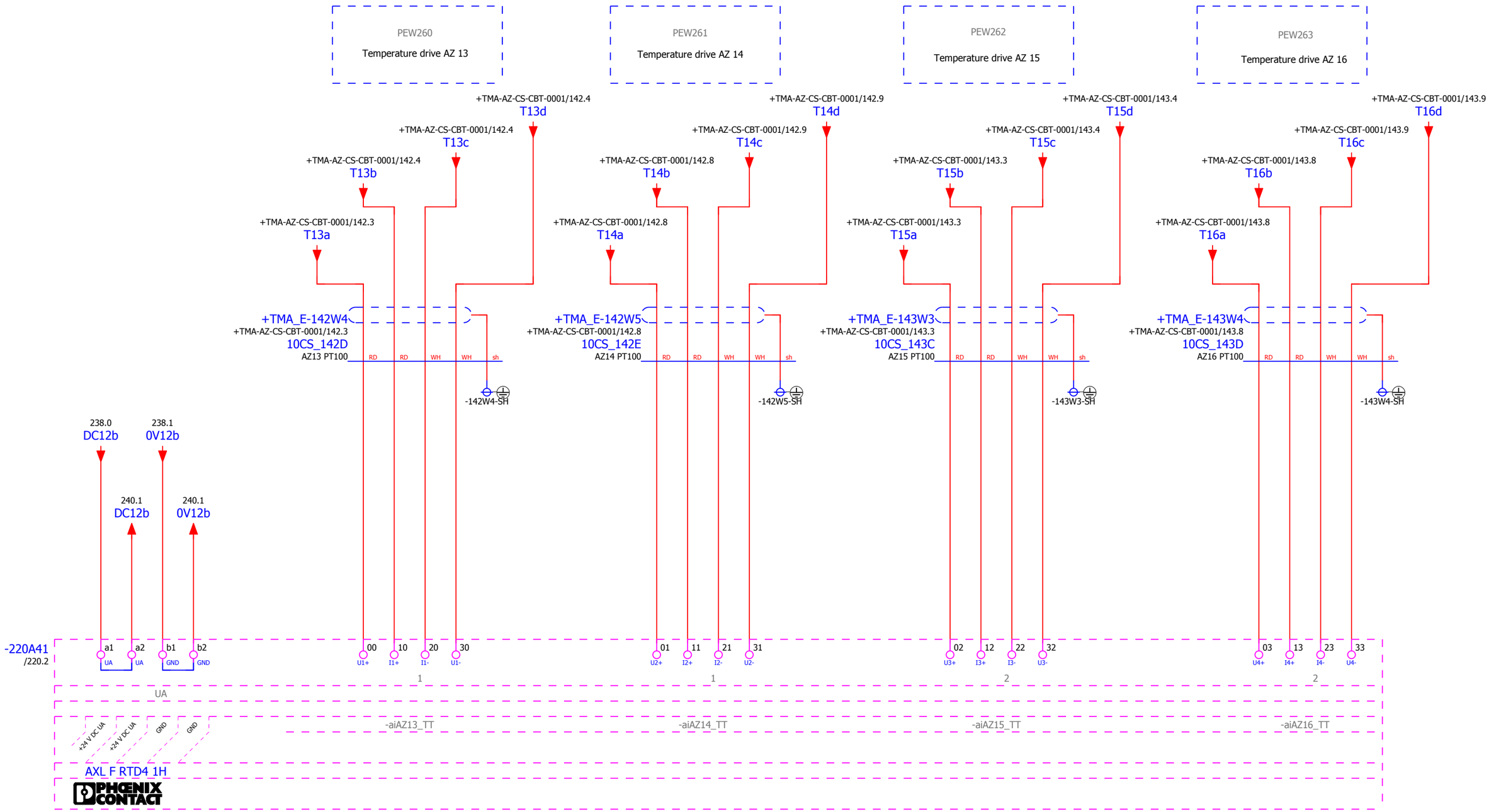

IK4-TEKNIKER
AVDA. OTAOLA 20
20600 Eibar (Gipuzkoa) Spain
Tfno.:(+34) 943 206744
Fax: (+34) 943 202757
Web: www.tekniker.es

Date	15/12/2017						
Reviewed	F.LÓPEZ	2.3	15/12/2017	JOSE MANUEL			
Drew by	JOSE MANUEL	Review	Date	Name	Review	Date	Name

3151_LSST
MCS Design Electrical Schematics
LSST TELESCOPE

Replaces | Replaced by

DISTRIBUTED TEMPERATURE INPUT MODULE

Customer: EMPRESARIOS AGRUPADOS
C/Magallanes, 3
28015 MADRID
91 3098000
http://www.empresariosagrupados.es/

= E1
+ TMA-AZ-CS-CBT-0101

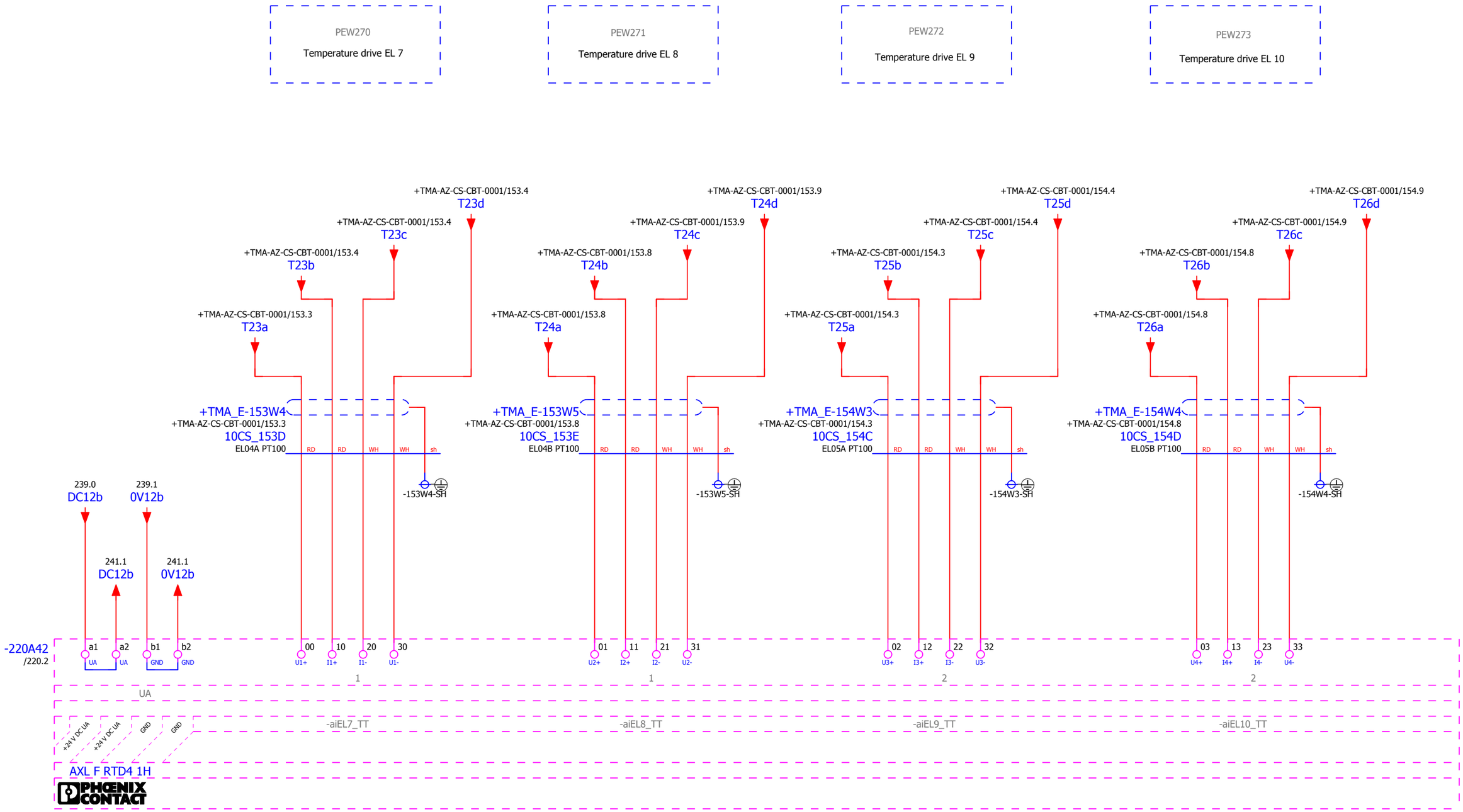

IK4 TEKNIKER Research Alliance

IK4-TEKNIKER
AVDA. OTAOLA 20
20600 Eibar (Gipuzkoa) Spain
Tfno.:(+34) 943 206744
Fax: (+34) 943 202757
Web: www.tekniker.es

Date	15/12/2017						
Reviewed	F.LÓPEZ	2.3	15/12/2017	JOSE MANUEL			
Drew by	JOSE MANUEL	Review	Date	Name	Review	Date	Name

3151_LSST — MCS Design Electrical Schematics

LSST TELESCOPE

Replaces | Replaced by

DISTRIBUTED TEMPERATURE INPUT MODULE

Customer: EMPRESARIOS AGRUPADOS
C/Magallanes, 3
28015 MADRID
91 3098000
http://www.empresariosagrupados.es/

= E1
+ TMA-AZ-CS-CBT-0101

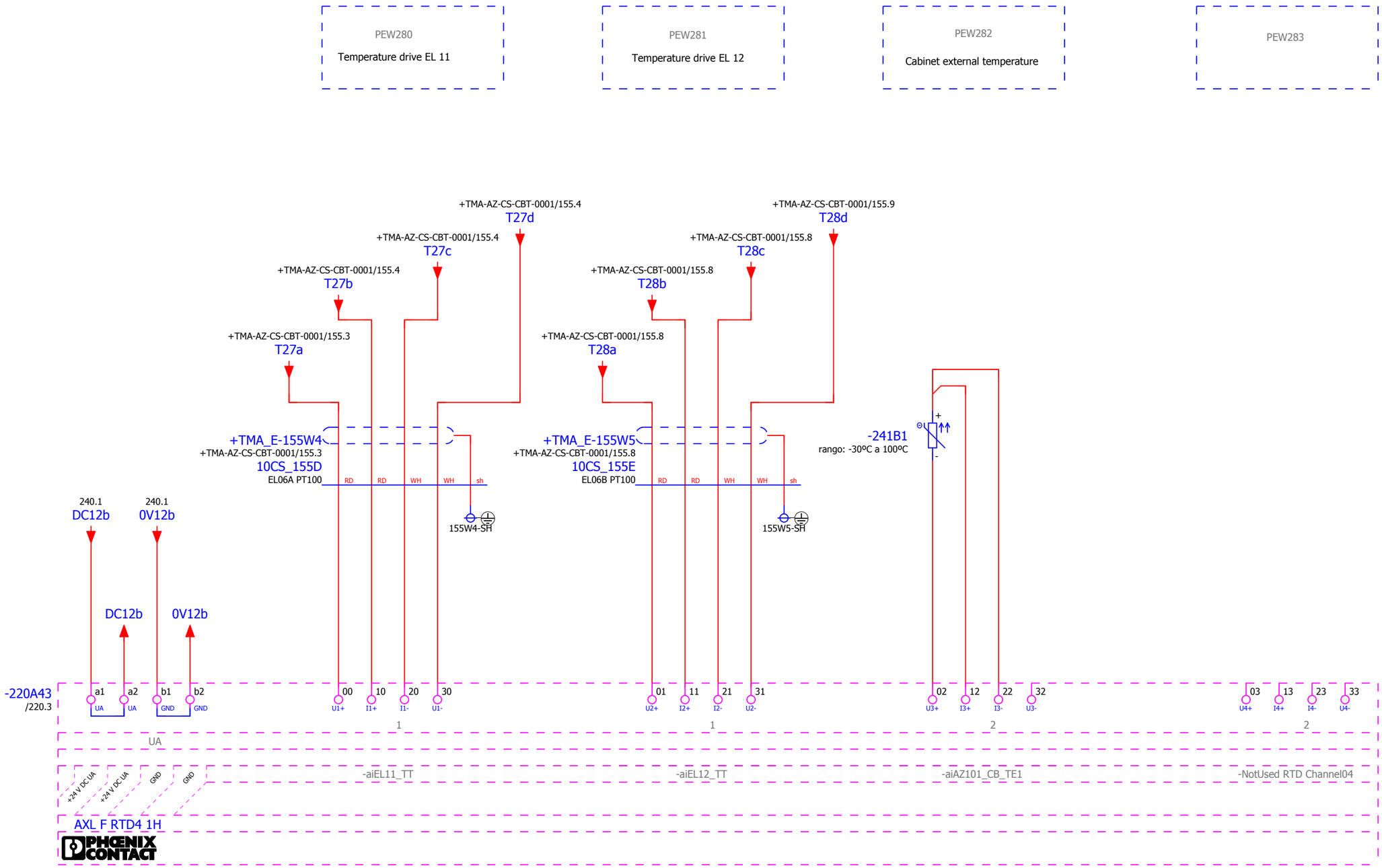

IK4 TEKNIKER Research Alliance

IK4-TEKNIKER
AVDA. OTAOLA 20
20600 Eibar (Gipuzkoa) Spain
Tfno.:(+34) 943 206744
Fax: (+34) 943 202757
Web: www.tekniker.es

Date	15/12/2017							
Reviewed	F.LÓPEZ	2.3	15/12/2017	JOSE MANUEL				
Drew by	JOSE MANUEL	Review	Date	Name	Review	Date	Name	

3151_LSST

MCS Design Electrical Schematics

LSST TELESCOPE

Replaces | Replaced by

DISTRIBUTED TEMPERATURE INPUT MODULE

Customer:
EMPRESARIOS AGRUPADOS
C/Magallanes, 3
28015 MADRID
91 3098000
http://www.empresariosagrupados.es/

= E1

+ TMA-AZ-CS-CBT-0101

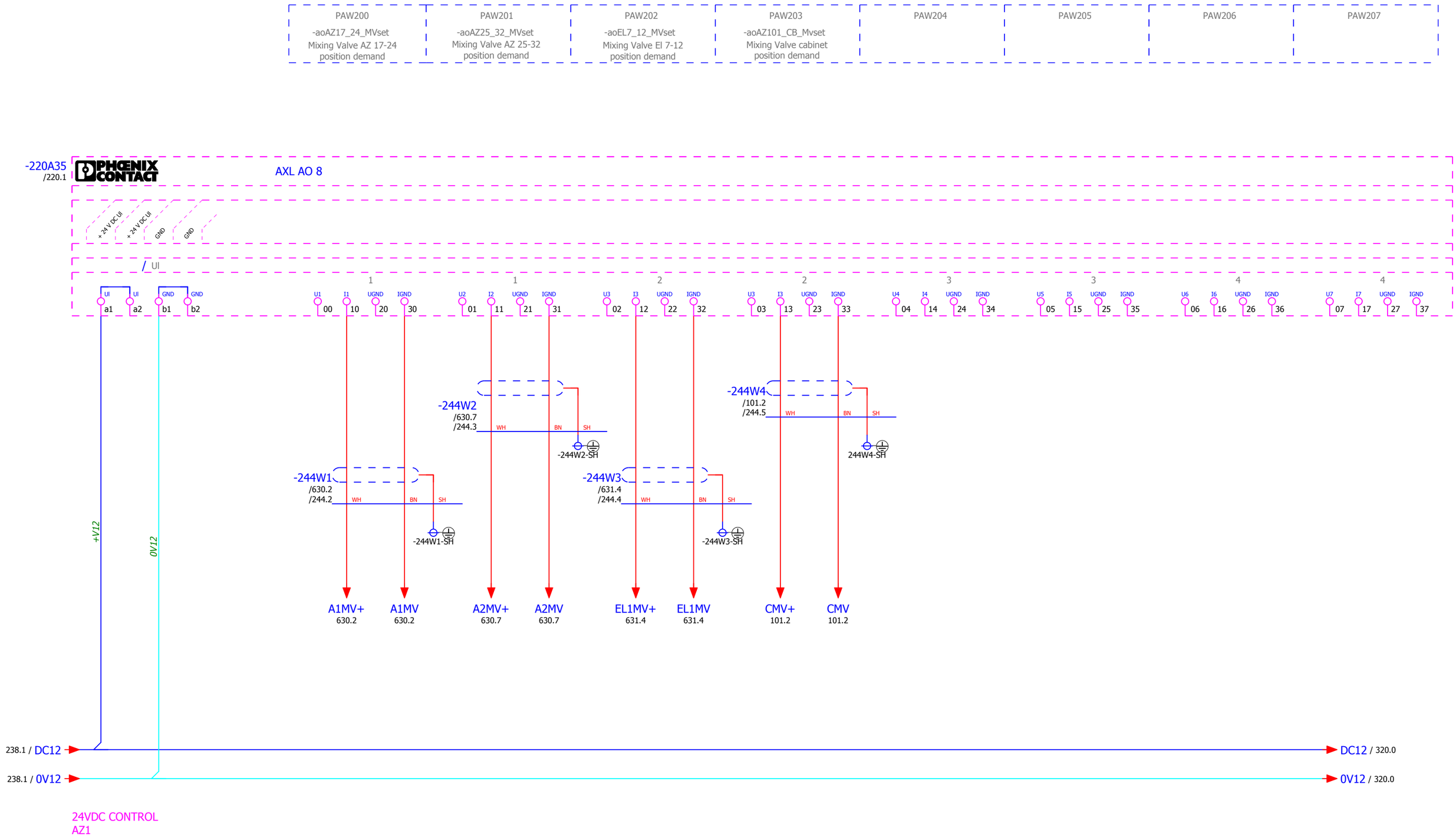

IK4 TEKNIKER Research Alliance
IK4-TEKNIKER
AVDA. OTAOLA 20
20600 Eibar (Gipuzkoa) Spain
Tfno.:(+34) 943 206744
Fax: (+34) 943 202757
Web: www.tekniker.es

Date	14/12/2017						
Reviewed	F.LÓPEZ	2.3	15/12/2017	JOSE MANUEL			
Drew by	JOSE MANUEL	Review	Date	Name	Review	Date	Name

3151_LSST

MCS Design Electrical Schematics

LSST TELESCOPE

Replaces | Replaced by

DISTRIBUTED ANALOG OUTPUT MODULE

Customer: EMPRESARIOS AGRUPADOS
C/Magallanes, 3
28015 MADRID
91 3098000
http://www.empresariosagrupados.es/

= E1

+ TMA-AZ-CS-CBT-0101

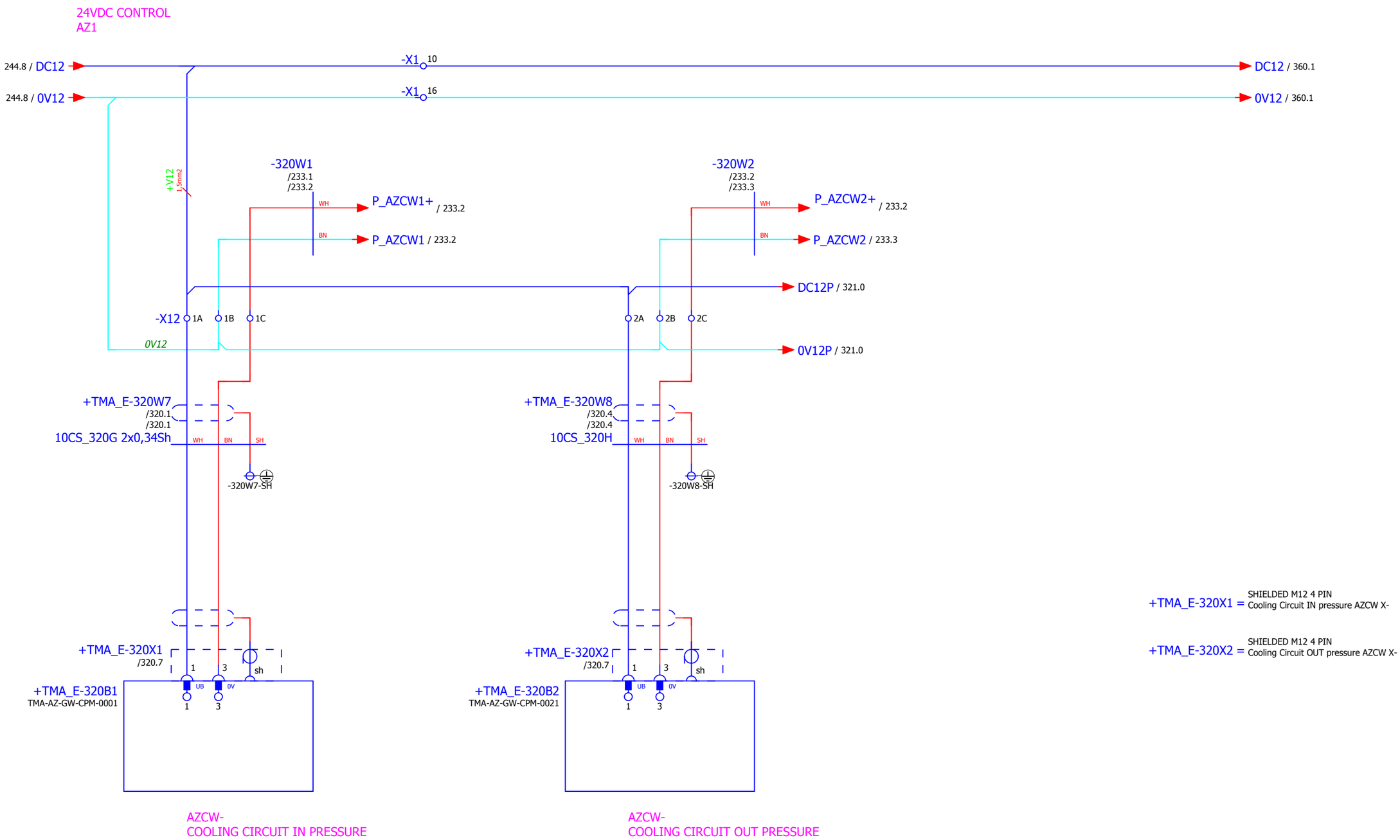

+TMA_E-320X1 = SHIELDED M12 4 PIN
Cooling Circuit IN pressure AZCW X-

+TMA_E-320X2 = SHIELDED M12 4 PIN
Cooling Circuit OUT pressure AZCW X-

TBD SENSOR:
TYPE OF SENSOR AND CONNECTION
REPRESENTED 4-20mA 2 WIRE M12 4 PIN CONNECTOR

IK4 TEKNIKER Research Alliance
IK4-TEKNIKER
AVDA. OTAOLA 20
20600 Eibar (Gipuzkoa) Spain
Tfno.:(+34) 943 206744
Fax: (+34) 943 202757
Web: www.tekniker.es

Date	15/12/2017						
Reviewed	F.LÓPEZ	2.3	15/12/2017	JOSE MANUEL			
Drew by	JOSE MANUEL	Review	Date	Name	Review	Date	Name

3151_LSST
MCS Design Electrical Schematics
LSST TELESCOPE
Replaces
Replaced by

AZCW- COOLING PRESSURE SENSORS

Customer:
EMPRESARIOS AGRUPADOS
C/Magallanes, 3
28015 MADRID
91 3098000
http://www.empresariosagrupados.es/

= E1
+ TMA-AZ-CS-CBT-0101

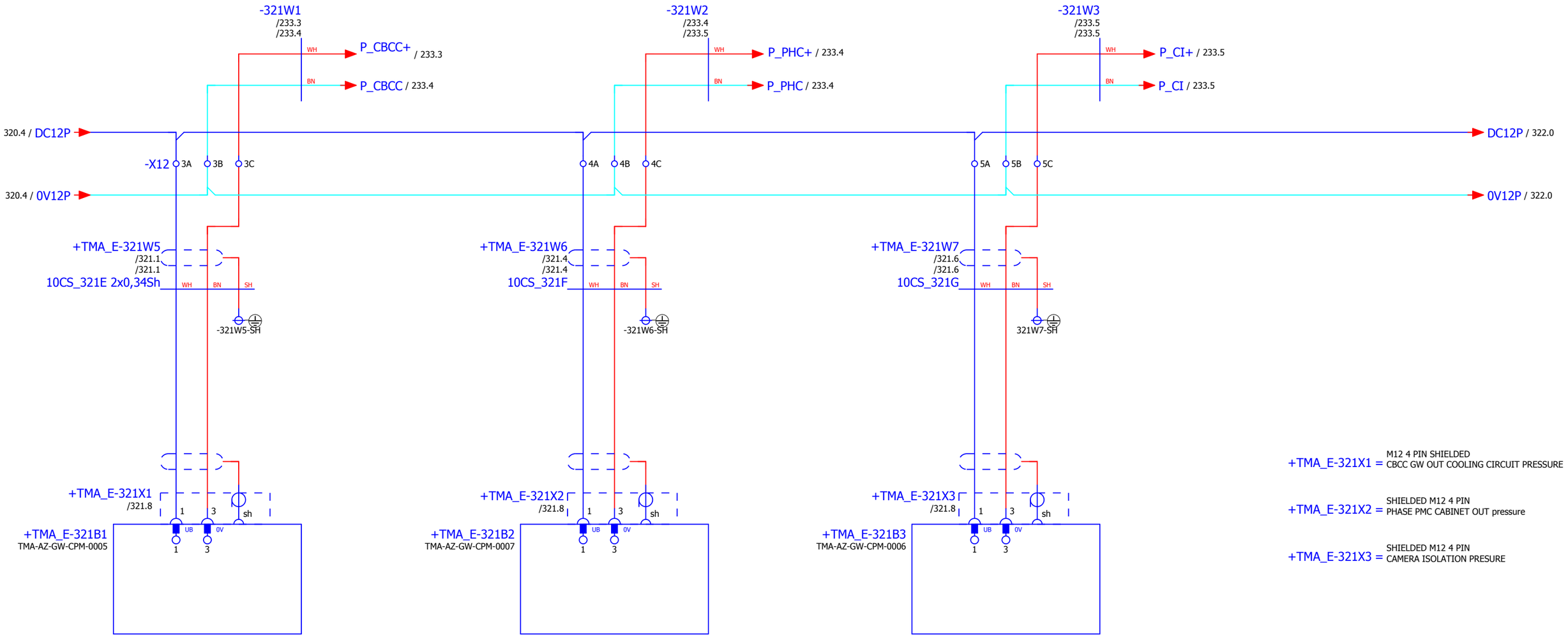

CBCC GW OUT COOLING CIRCUIT PRESSURE

PHASE PMC CABINET OUT PRESSURE

PRESION OUT ISOLATION TRANSFORMER

TBD SENSOR:
TYPE OF SENSOR AND CONNECTION
REPRESENTED 4-20mA 2 WIRE M12 4 PIN CONNECTOR

IK4 TEKNIKER Research Alliance
IK4-TEKNIKER
AVDA. OTAOLA 20
20600 Eibar (Gipuzkoa) Spain
Tfno.:(+34) 943 206744
Fax: (+34) 943 202757
Web: www.tekniker.es

Date	15/12/2017						
Reviewed	F.LÓPEZ	2.3	15/12/2017	JOSE MANUEL			
Drew by	JOSE MANUEL	Review	Date	Name	Review	Date	Name

3151_LSST
MCS Design Electrical Schematics
LSST TELESCOPE
Replaces
Replaced by

PRESSURE SENSORS

Customer:
EMPRESARIOS AGRUPADOS
C/Magallanes, 3
28015 MADRID
91 3098000
http://www.empresariosagrupados.es/

= E1
+ TMA-AZ-CS-CBT-0101

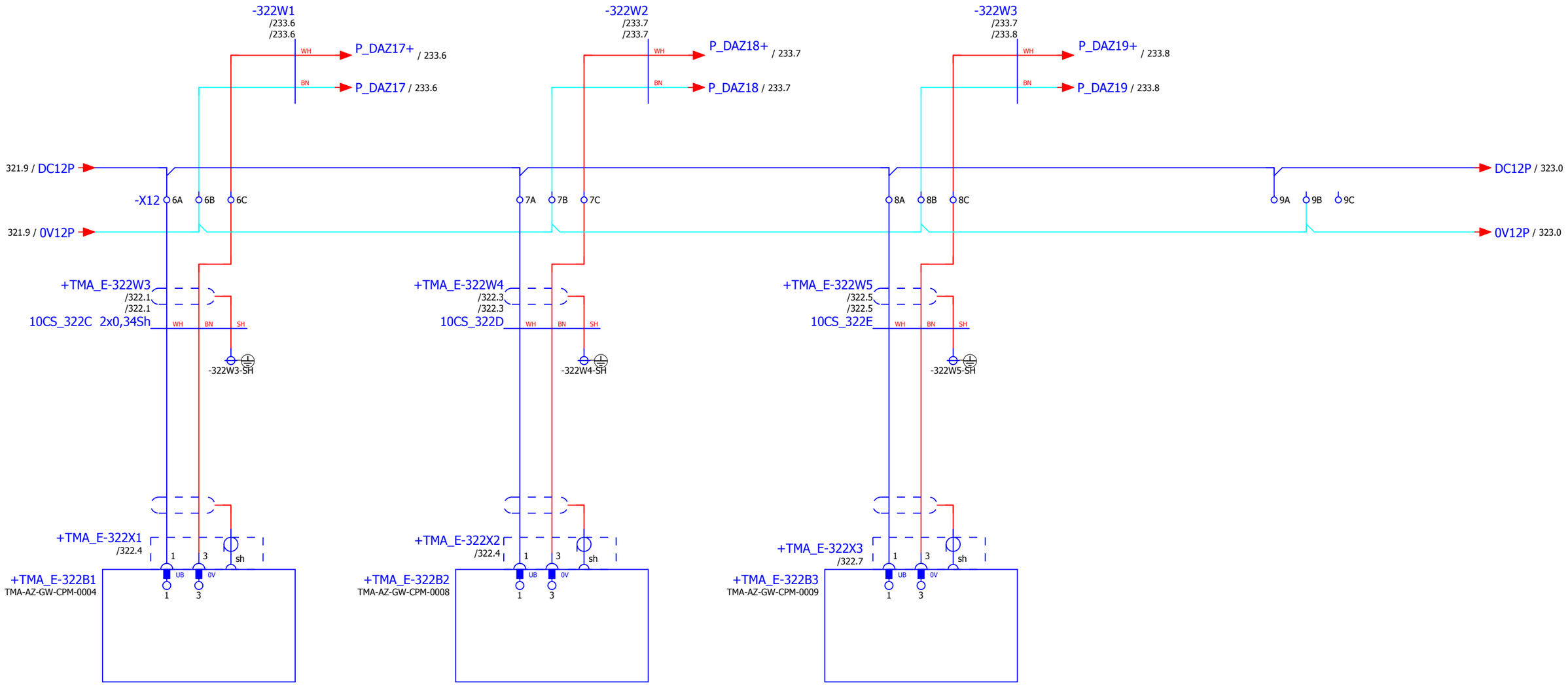

TBD SENSOR:
TYPE OF SENSOR AND CONNECTION
REPRESENTED 4-20mA 2 WIRE M12 4 PIN CONNECTOR

+TMA_E-322X1 = SHIELDED M12 4 PIN
AZ17-24 DRIVERS Cooling Circuit OUT pressure

+TMA_E-322X2 = MCS AZ IO CABINET
COOLING OUTLET PRESSURE

+TMA_E-322X3 = SHIELDED M12 4 PIN
AZ21-22 DRIVERS Cooling Circuit OUT pressure

IK4 TEKNIKER Research Alliance
IK4-TEKNIKER
AVDA. OTAOLA 20
20600 Eibar (Gipuzkoa) Spain
Tfno.:(+34) 943 206744
Fax: (+34) 943 202757
Web: www.tekniker.es

Date	15/12/2017						
Reviewed	F.LÓPEZ	2.3	15/12/2017	JOSE MANUEL			
Drew by	JOSE MANUEL	Review	Date	Name	Review	Date	Name

3151_LSST
MCS Design Electrical Schematics
LSST TELESCOPE
Replaces
Replaced by

AZ DRIVERS COOLING PRESSURE SENSORS

Customer: EMPRESARIOS AGRUPADOS
C/Magallanes, 3
28015 MADRID
91 3098000
http://www.empresariosagrupados.es/

= E1
+ TMA-AZ-CS-CBT-0101

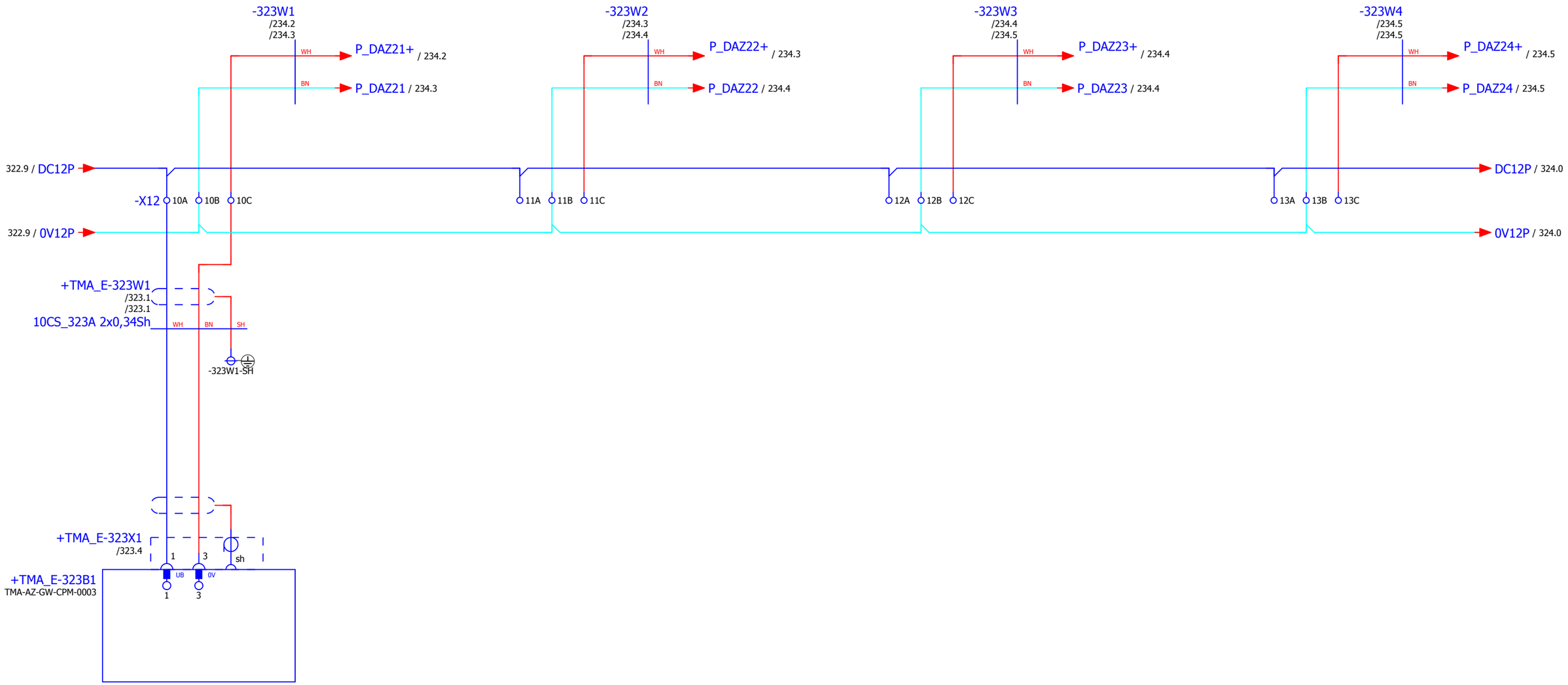

TBD SENSOR:
TYPE OF SENSOR AND CONNECTION
REPRESENTED 4-20mA 2 WIRE M12 4 PIN CONNECTOR

+TMA_E-323X1 = SHIELDED M12 4 PIN
AZ25-26 DRIVERS Cooling Circuit OUT pressure

◁ 322
324 ▷

IK4 TEKNIKER Research Alliance
IK4-TEKNIKER
AVDA. OTAOLA 20
20600 Eibar (Gipuzkoa) Spain
Tfno.:(+34) 943 206744
Fax: (+34) 943 202757
Web: www.tekniker.es

Date	15/12/2017						
Reviewed	F.LÓPEZ	2.3	15/12/2017	JOSE MANUEL			
Drew by	JOSE MANUEL	Review	Date	Name	Review	Date	Name

3151_LSST
MCS Design Electrical Schematics
LSST TELESCOPE
Replaces
Replaced by

AZ DRIVERS COOLING PRESSURE SENSORS

Customer: EMPRESARIOS AGRUPADOS
C/Magallanes, 3
28015 MADRID
91 3098000
http://www.empresariosagrupados.es/

= E1
+ TMA-AZ-CS-CBT-0101

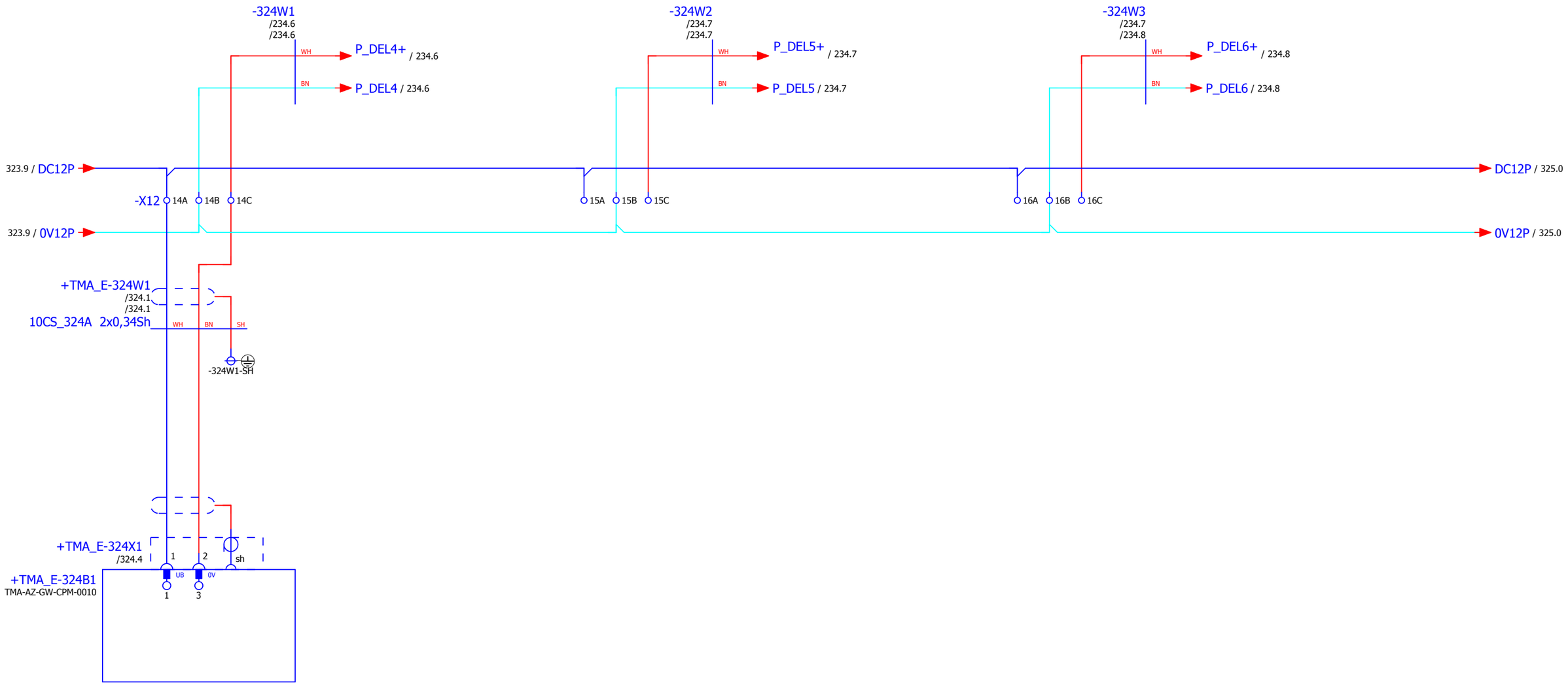

EL 7-12 DRIVERS
COOLING CIRCUIT OUT PRESSURE

+TMA_E-324X1 = SHIELDED M12 4 PIN
EL7-8 DRIVERS Cooling Circuit OUT pressure

TBD SENSOR:
TYPE OF SENSOR AND CONNECTION
REPRESENTED 4-20mA 2 WIRE M12 4 PIN CONNECTOR

◁ 323

325 ▷

IK4 TEKNIKER Research Alliance
IK4-TEKNIKER
AVDA. OTAOLA 20
20600 Eibar (Gipuzkoa) Spain
Tfno.:(+34) 943 206744
Fax: (+34) 943 202757
Web: www.tekniker.es

Date	15/12/2017						
Reviewed	F.LÓPEZ	2.3	15/12/2017	JOSE MANUEL			
Drew by	JOSE MANUEL	Review	Date	Name	Review	Date	Name

3151_LSST
MCS Design Electrical Schematics
LSST TELESCOPE
Replaces
Replaced by

EL DRIVERS COOLING PRESSURE SENSORS

Customer:
EMPRESARIOS AGRUPADOS
C/Magallanes, 3
28015 MADRID
91 3098000
http://www.empresariosagrupados.es/

= E1
+ TMA-AZ-CS-CBT-0101

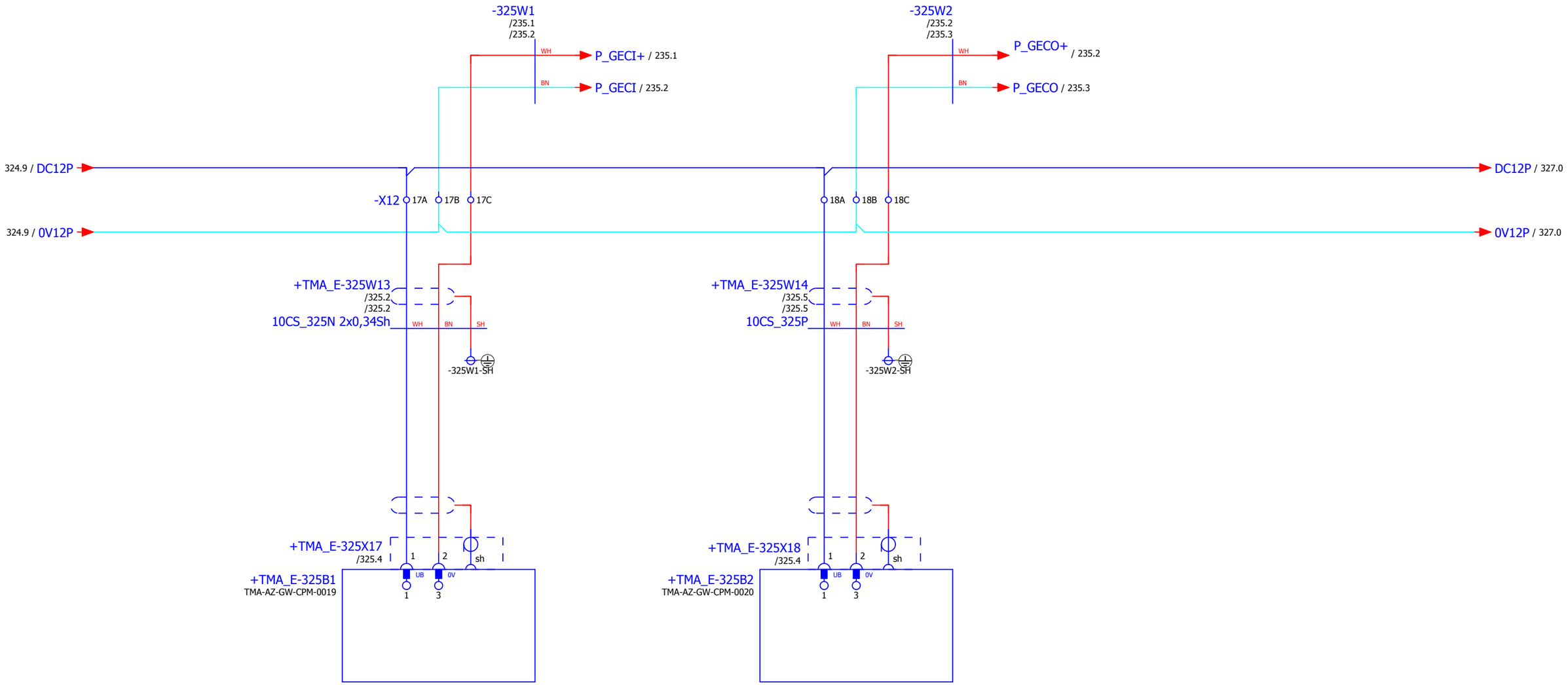

GW EL CW COOLING CIRCUIT IN PRESSURE

GW EL CW COOLING CIRCUIT OUT PRESSURE

TBD SENSOR:
TYPE OF SENSOR AND CONNECTION
REPRESENTED 4-20mA 2 WIRE M12 4 PIN CONNECTOR

+TMA_E-325X17 = GW EL CW COOLING CIRCUIT IN PRESSURE

+TMA_E-325X18 = GW EL CW COOLING CIRCUIT OUT PRESSURE

IK4 TEKNIKER Research Alliance
IK4-TEKNIKER
AVDA. OTAOLA 20
20600 Eibar (Gipuzkoa) Spain
Tfno.:(+34) 943 206744
Fax: (+34) 943 202757
Web: www.tekniker.es

Date	15/12/2017						
Reviewed	F.LÓPEZ	2.3	15/12/2017	JOSE MANUEL			
Drew by	JOSE MANUEL	Review	Date	Name	Review	Date	Name

3151_LSST
MCS Design Electrical Schematics
LSST TELESCOPE

Replaces | Replaced by

GW EL CW COOLING PRESSURE SENSORS

Customer: EMPRESARIOS AGRUPADOS
C/Magallanes, 3
28015 MADRID
91 3098000
http://www.empresariosagrupados.es/

= E1
+ TMA-AZ-CS-CBT-0101

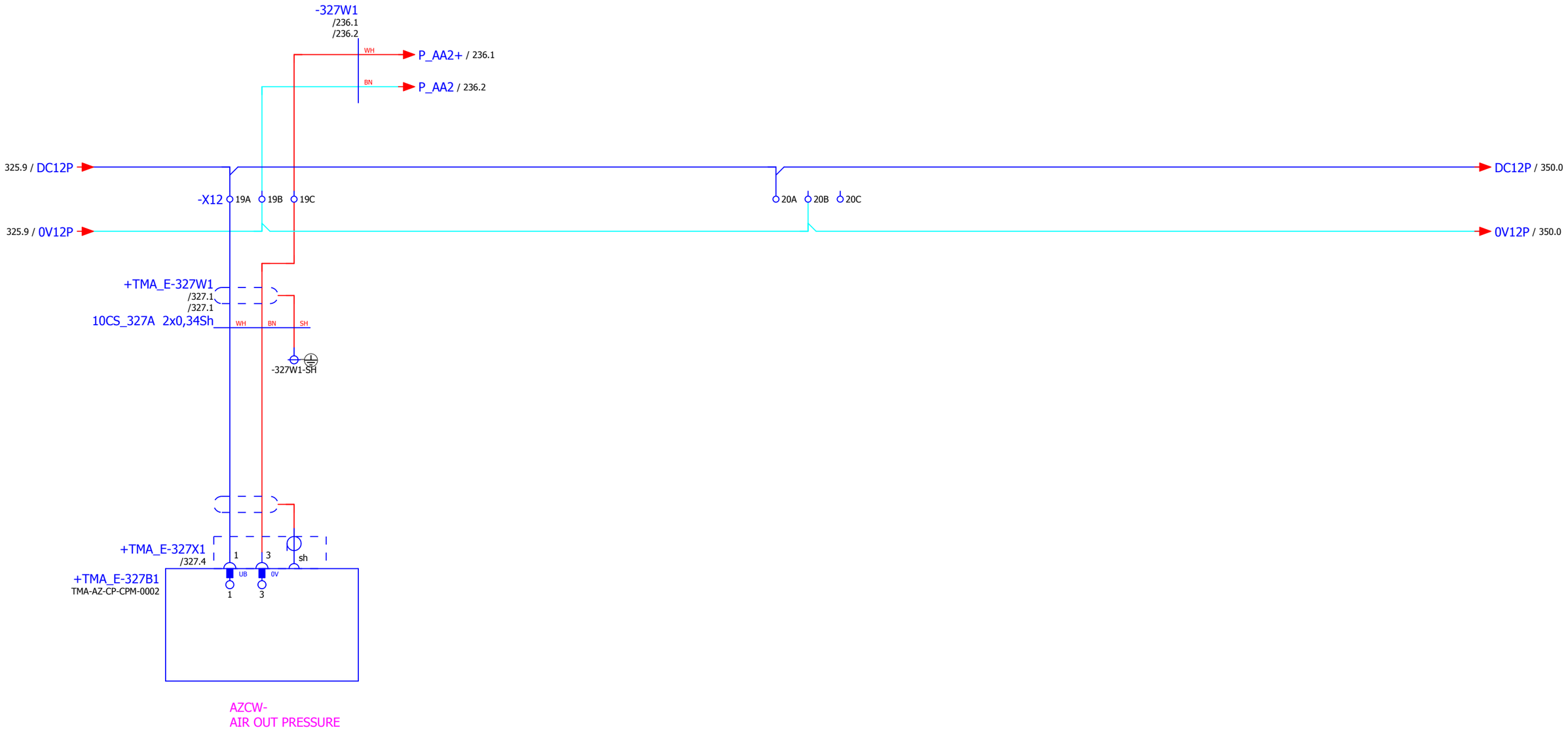

TBD SENSOR:
TYPE OF SENSOR AND CONNECTION
REPRESENTED 4-20mA 2 WIRE M12 4 PIN CONNECTOR

+TMA_E-327X1 = SHIELDED M12 4 PIN
AZCW- AIR OUT pressure

IK4 TEKNIKER Research Alliance
IK4-TEKNIKER
AVDA. OTAOLA 20
20600 Eibar (Gipuzkoa) Spain
Tfno.:(+34) 943 206744
Fax: (+34) 943 202757
Web: www.tekniker.es

Date	15/12/2017						
Reviewed	F.LÓPEZ	2.3	15/12/2017	JOSE MANUEL			
Drew by	JOSE MANUEL	Review	Date	Name	Review	Date	Name

3151_LSST
MCS Design Electrical Schematics
LSST TELESCOPE
Replaces
Replaced by

AIR PRESSURE SENSORS

Customer:
EMPRESARIOS AGRUPADOS
C/Magallanes, 3
28015 MADRID
91 3098000
http://www.empresariosagrupados.es/

= E1
+ TMA-AZ-CS-CBT-0101

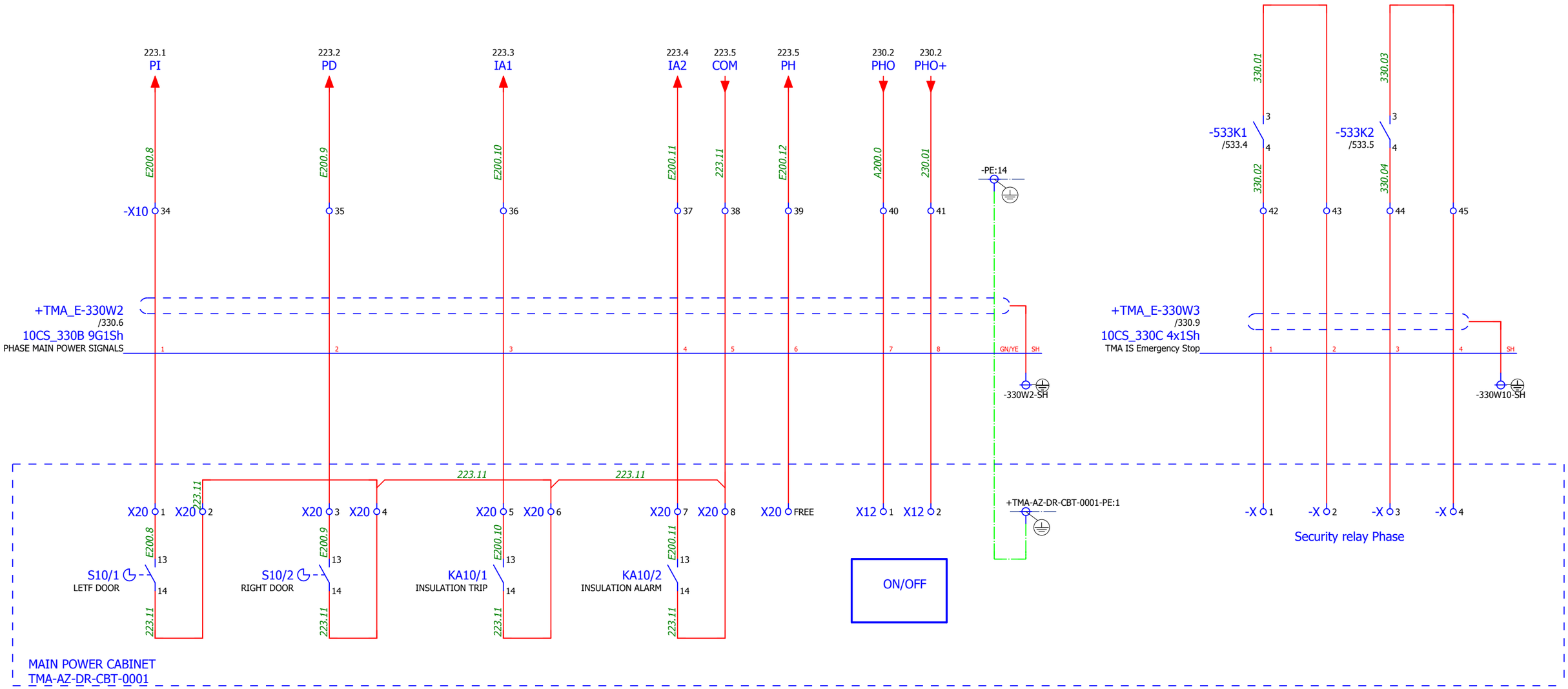

IK4 TEKNIKER Research Alliance	IK4-TEKNIKER AVDA. OTAOLA 20 20600 Eibar (Gipuzkoa) Spain Tfno.:(+34) 943 206744 Fax: (+34) 943 202757 Web: www.tekniker.es									3151_LSST	MCS Design Electrical Schematics LSST TELESCOPE	PHASE MAIN POWER CABINET SIGNALS	Customer: EMPRESARIOS AGRUPADOS C/Magallanes, 3 28015 MADRID 91 3098000 http://www.empresariosagrupados.es/	= E1 + TMA-AZ-CS-CBT-0101
		Date	15/12/2017											
		Reviewed	F.LÓPEZ	2.3	15/12/2017	JOSE MANUEL								
		Drew by	JOSE MANUEL	Review	Date	Name	Review	Date	Name	Replaces	Replaced by			Page 330 Total number 710

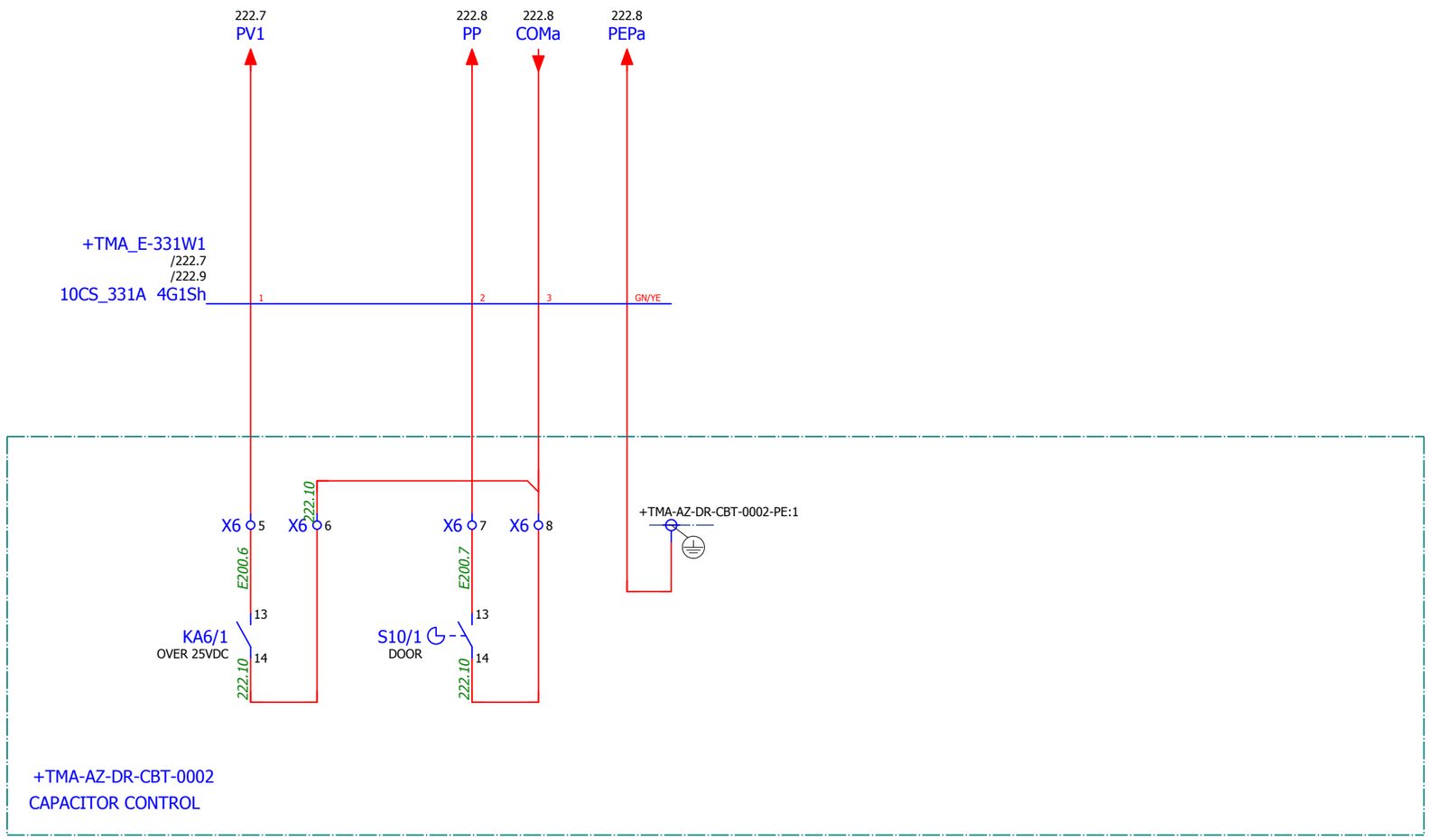

IK4 TEKNIKER Research Alliance
IK4-TEKNIKER
AVDA. OTAOLA 20
20600 Eibar (Gipuzkoa) Spain
Tfno.:(+34) 943 206744
Fax: (+34) 943 202757
Web: www.tekniker.es

Date	15/12/2017							
Reviewed	F.LÓPEZ	2.3	15/12/2017	JOSE MANUEL				
Drew by	JOSE MANUEL	Review	Date	Name	Review	Date	Name	

3151_LSST

MCS Design Electrical Schematics

LSST TELESCOPE

Replaces | Replaced by

PHASE CAPACITOR CONTROL
CABINET SIGNALS

Customer:
EMPRESARIOS AGRUPADOS
C/Magallanes, 3
28015 MADRID
91 3098000
http://www.empresariosagrupados.es/

= E1
+ TMA-AZ-CS-CBT-0101

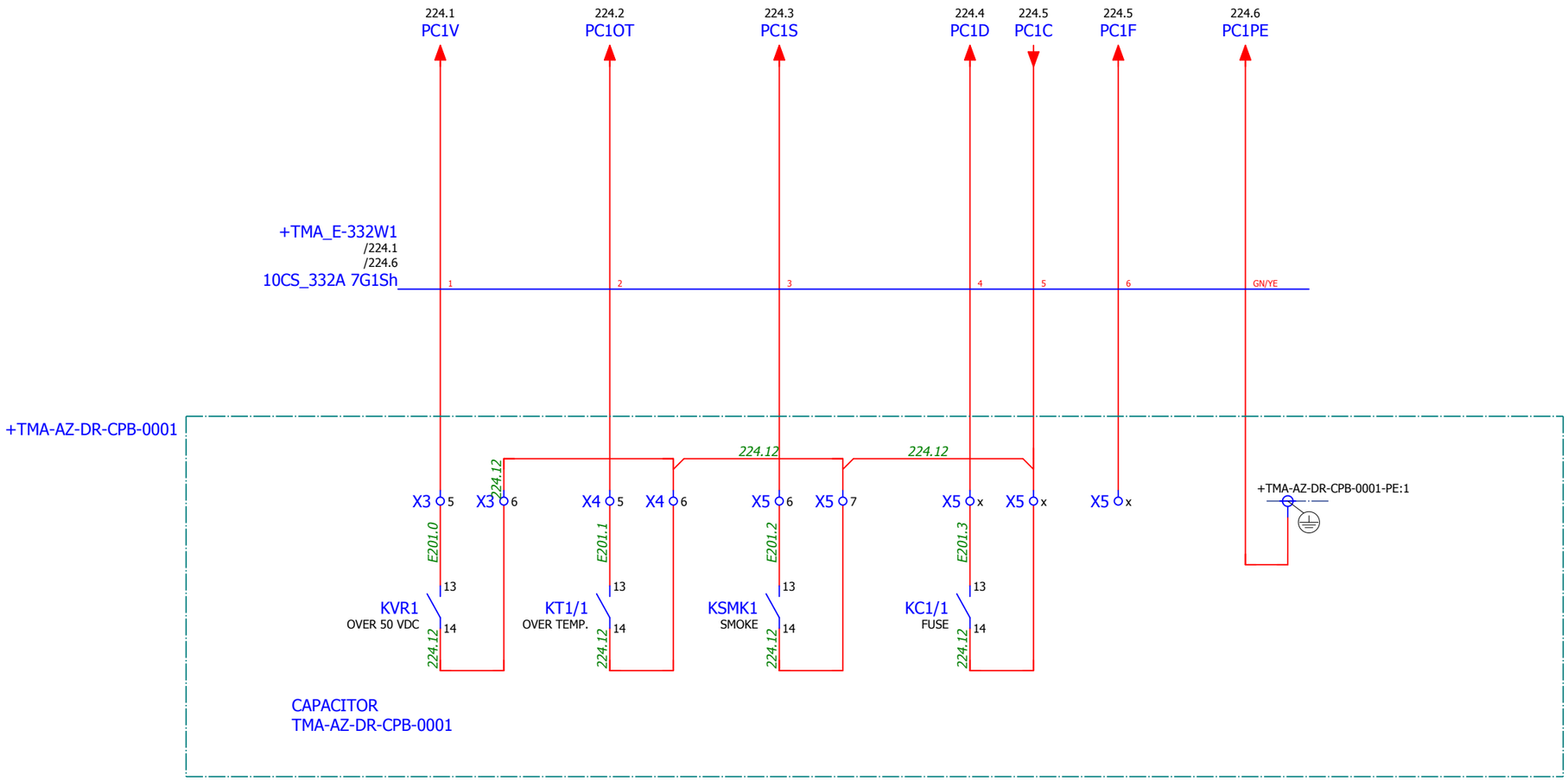

IK4 TEKNIKER Research Alliance
IK4-TEKNIKER
AVDA. OTAOLA 20
20600 Eibar (Gipuzkoa) Spain
Tfno.:(+34) 943 206744
Fax: (+34) 943 202757
Web: www.tekniker.es

Date	15/12/2017						
Reviewed	F.LÓPEZ	2.3	15/12/2017	JOSE MANUEL			
Drew by	JOSE MANUEL	Review	Date	Name	Review	Date	Name

3151_LSST
MCS Design Electrical Schematics
LSST TELESCOPE

Replaces
Replaced by

PHASE CAPACITOR 1 CABINET SIGNALS

Customer:
EMPRESARIOS AGRUPADOS
C/Magallanes, 3
28015 MADRID
91 3098000
http://www.empresariosagrupados.es/

= E1
+ TMA-AZ-CS-CBT-0101

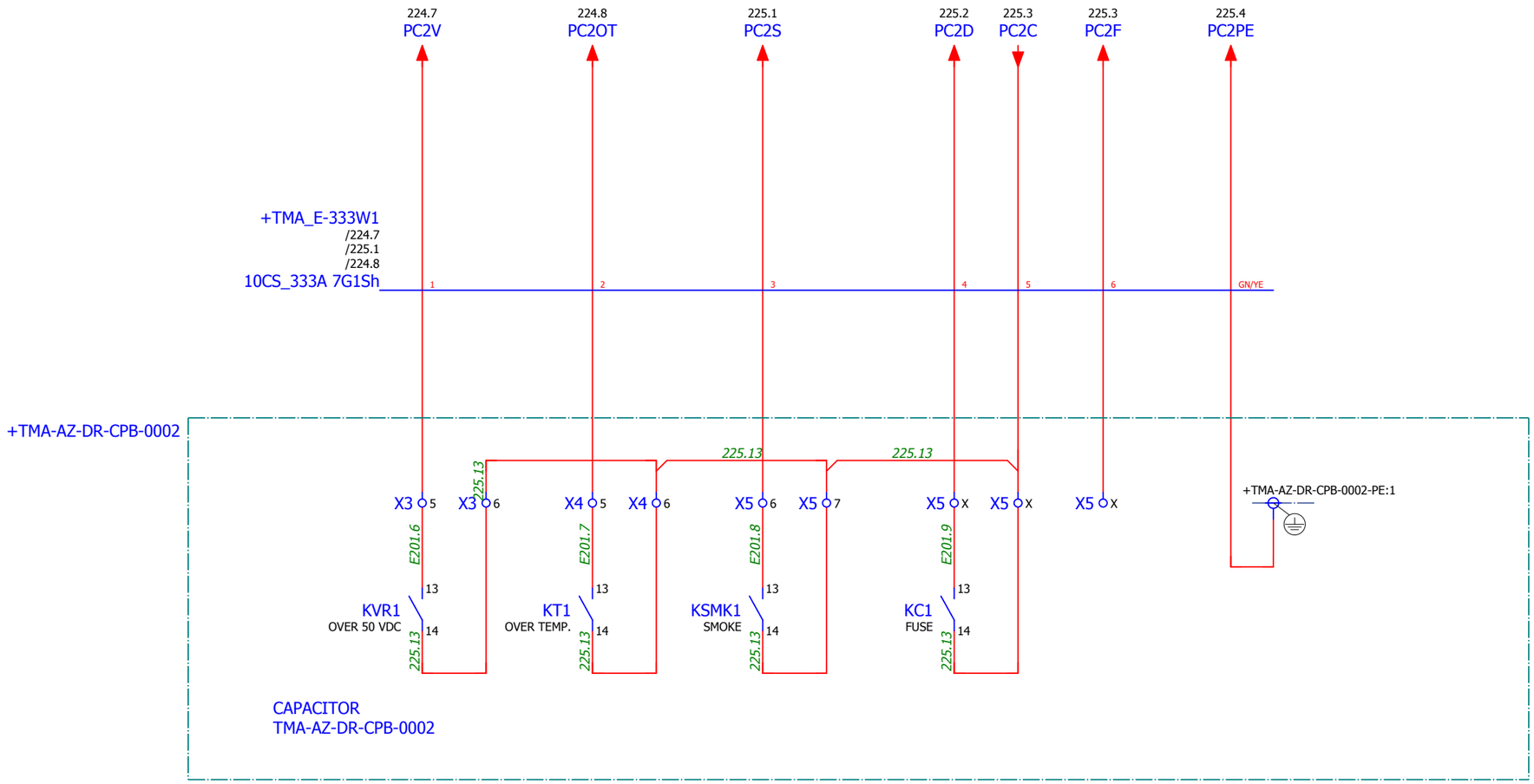

IK4 TEKNIKER Research Alliance

IK4-TEKNIKER
AVDA. OTAOLA 20
20600 Eibar (Gipuzkoa) Spain
Tfno.:(+34) 943 206744
Fax: (+34) 943 202757
Web: www.tekniker.es

Date	15/12/2017						
Reviewed	F.LÓPEZ	2.3	15/12/2017	JOSE MANUEL			
Drew by	JOSE MANUEL	Review	Date	Name	Review	Date	Name

3151_LSST

MCS Design Electrical Schematics

LSST TELESCOPE

Replaces

Replaced by

PHASE CAPACITOR CABINET 2 SIGNALS

Customer:

EMPRESARIOS AGRUPADOS

C/Magallanes, 3
28015 MADRID
91 3098000

http://www.empresariosagrupados.es/

= E1

+ TMA-AZ-CS-CBT-0101

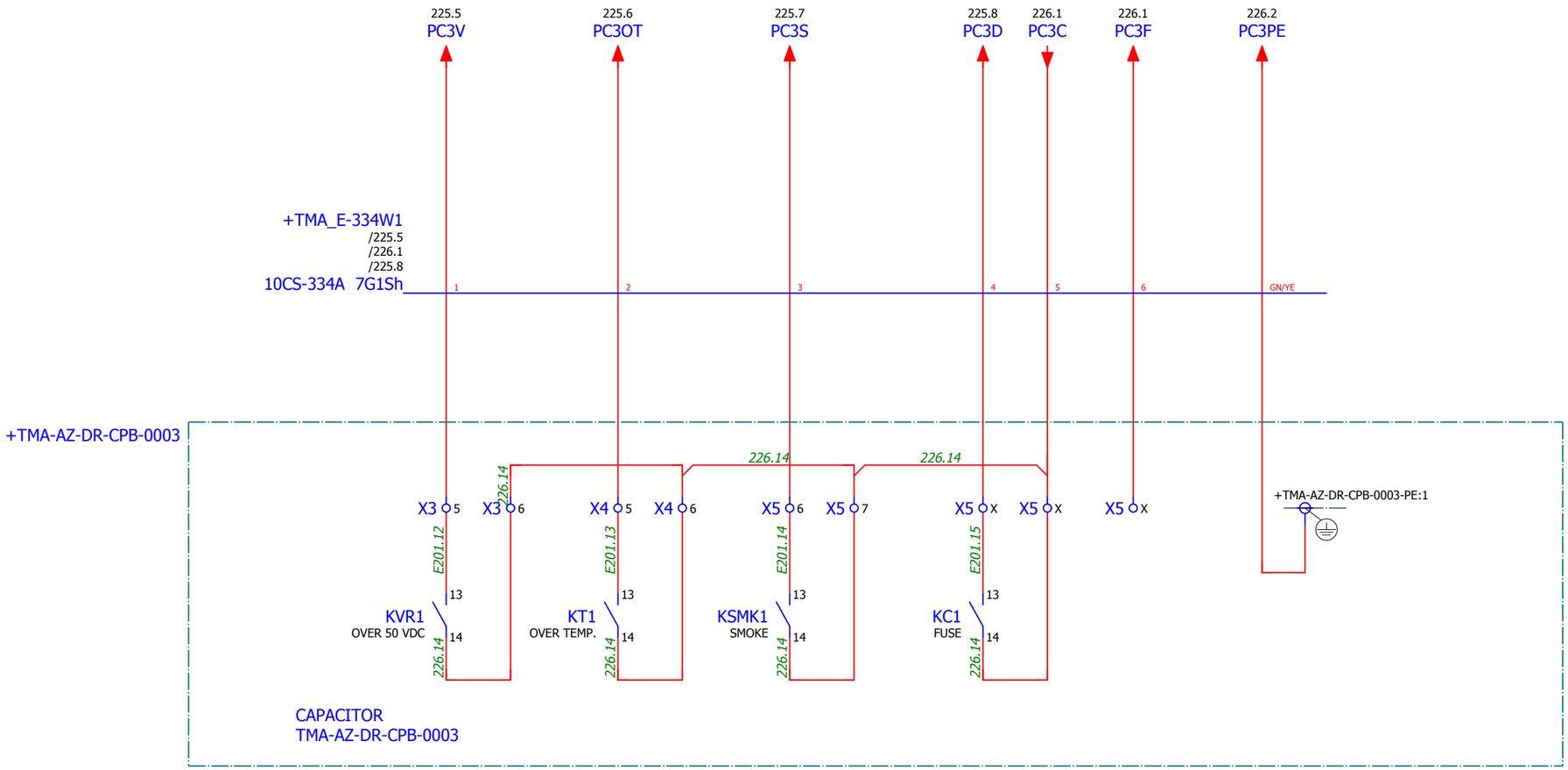

IK4 TEKNIKER Research Alliance

IK4-TEKNIKER
AVDA. OTAOLA 20
20600 Eibar (Gipuzkoa) Spain
Tfno.:(+34) 943 206744
Fax: (+34) 943 202757
Web: www.tekniker.es

Date	15/12/2017						
Reviewed	F.LÓPEZ	2.3	15/12/2017	JOSE MANUEL			
Drew by	JOSE MANUEL	Review	Date	Name	Review	Date	Name

3151_LSST

MCS Design Electrical Schematics

LSST TELESCOPE

Replaces | Replaced by

PHASE CAPACITOR CABINET 3 SIGNALS

Customer: EMPRESARIOS AGRUPADOS

C/Magallanes, 3
28015 MADRID
91 3098000
http://www.empresariosagrupados.es/

= E1

+ TMA-AZ-CS-CBT-0101

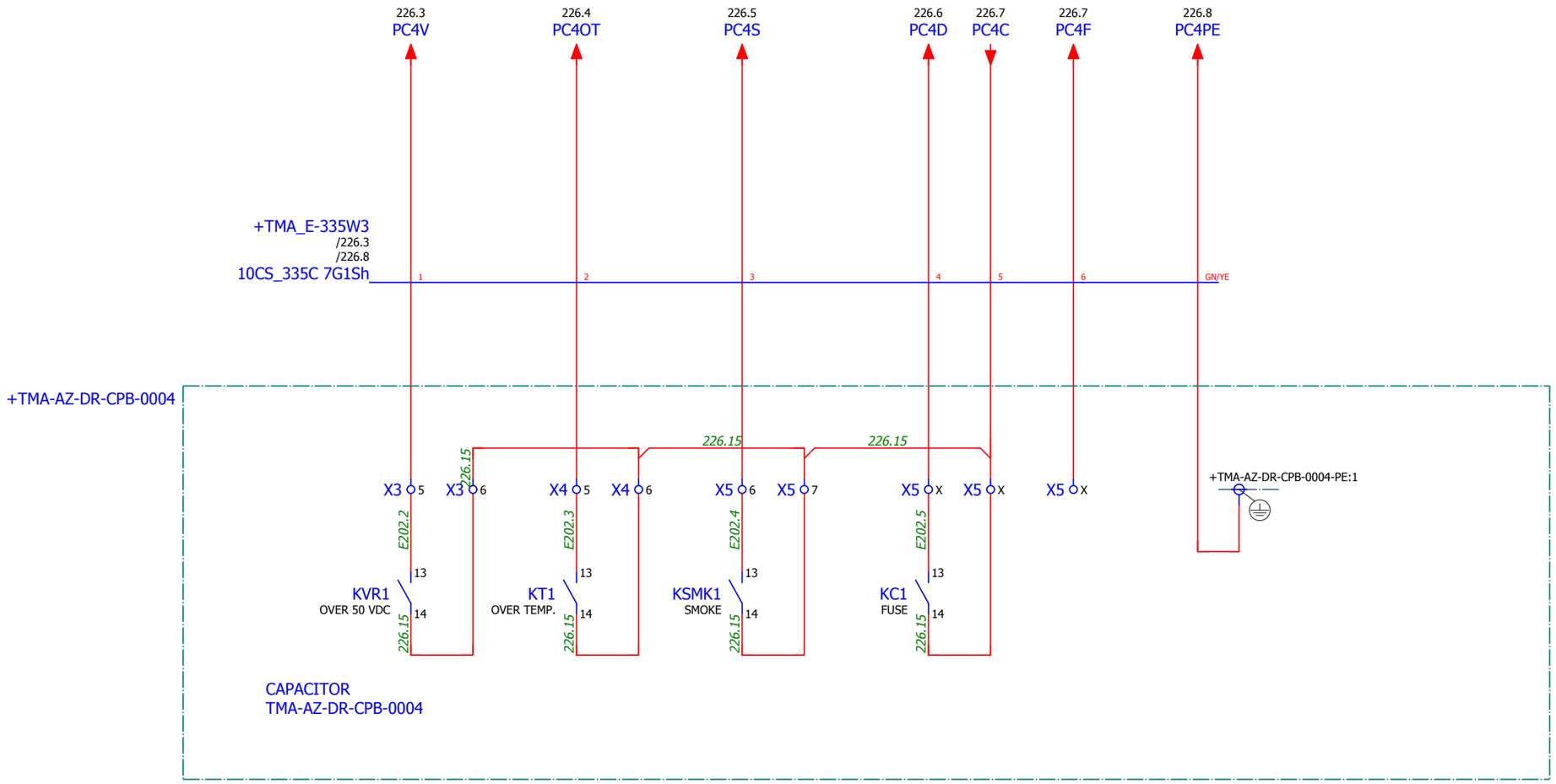

IK4 TEKNIKER Research Alliance

IK4-TEKNIKER
AVDA. OTAOLA 20
20600 Eibar (Gipuzkoa) Spain
Tfno.:(+34) 943 206744
Fax: (+34) 943 202757
Web: www.tekniker.es

Date	15/12/2017						
Reviewed	F.LÓPEZ	2.3	15/12/2017	JOSE MANUEL			
Drew by	JOSE MANUEL	Review	Date	Name	Review	Date	Name

3151_LSST

MCS Design Electrical Schematics

LSST TELESCOPE

Replaces | Replaced by

PHASE CAPACITOR CABINET 4 SIGNALS

Customer: EMPRESARIOS AGRUPADOS

C/Magallanes, 3
28015 MADRID
91 3098000
http://www.empresariosagrupados.es/

= E1

+ TMA-AZ-CS-CBT-0101

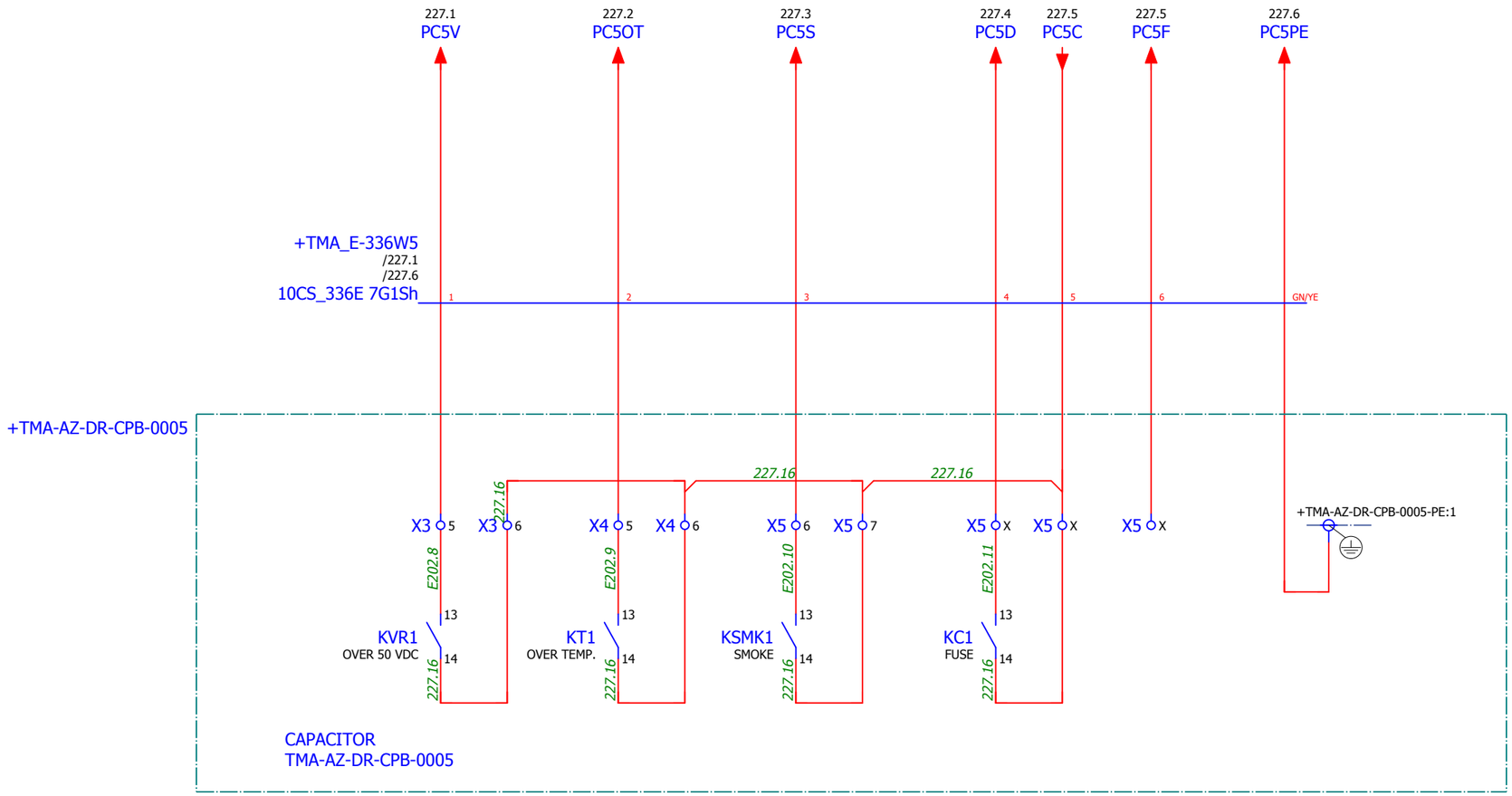

IK4-TEKNIKER
AVDA. OTAOLA 20
20600 Eibar (Gipuzkoa) Spain
Tfno.:(+34) 943 206744
Fax: (+34) 943 202757
Web: www.tekniker.es

Date	15/12/2017						
Reviewed	F.LÓPEZ	2.3	15/12/2017	JOSE MANUEL			
Drew by	JOSE MANUEL	Review	Date	Name	Review	Date	Name

3151_LSST

MCS Design Electrical Schematics

LSST TELESCOPE

Replaces

Replaced by

PHASE CAPACITOR CABINET 5 SIGNALS

Customer:

EMPRESARIOS AGRUPADOS

C/Magallanes, 3
28015 MADRID
91 3098000

http://www.empresariosagrupados.es/

= E1

+ TMA-AZ-CS-CBT-0101

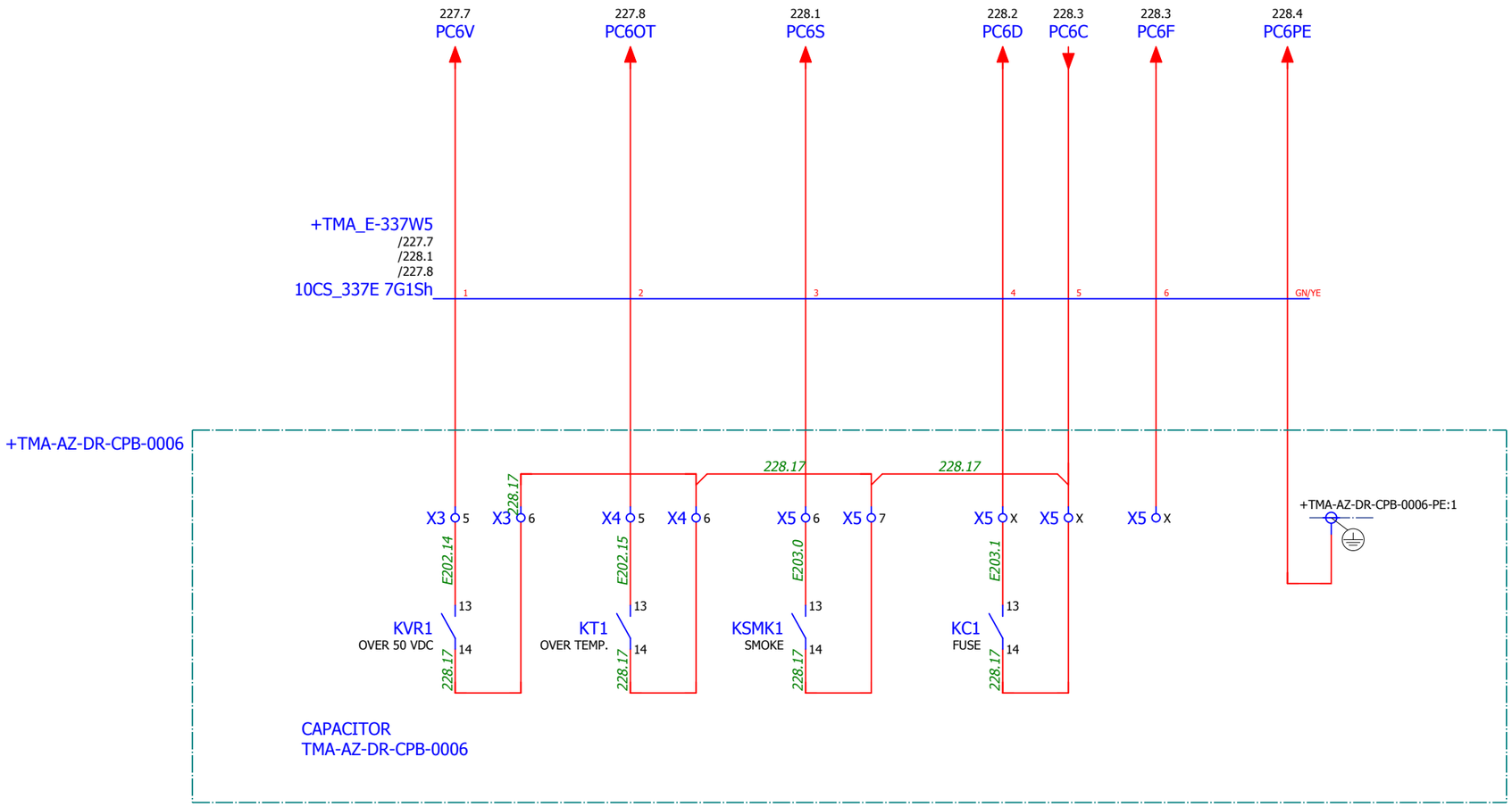

IK4 TEKNIKER Research Alliance

IK4-TEKNIKER
AVDA. OTAOLA 20
20600 Eibar (Gipuzkoa) Spain
Tfno.:(+34) 943 206744
Fax: (+34) 943 202757
Web: www.tekniker.es

Date	15/12/2017						
Reviewed	F.LÓPEZ	2.3	15/12/2017	JOSE MANUEL			
Drew by	JOSE MANUEL	Review	Date	Name	Review	Date	Name

3151_LSST

MCS Design Electrical Schematics

LSST TELESCOPE

Replaces

Replaced by

PHASE CAPACITOR CABINET 6 SIGNALS

Customer:

EMPRESARIOS AGRUPADOS

C/Magallanes, 3
28015 MADRID
91 3098000

http://www.empresariosagrupados.es/

= E1

+ TMA-AZ-CS-CBT-0101

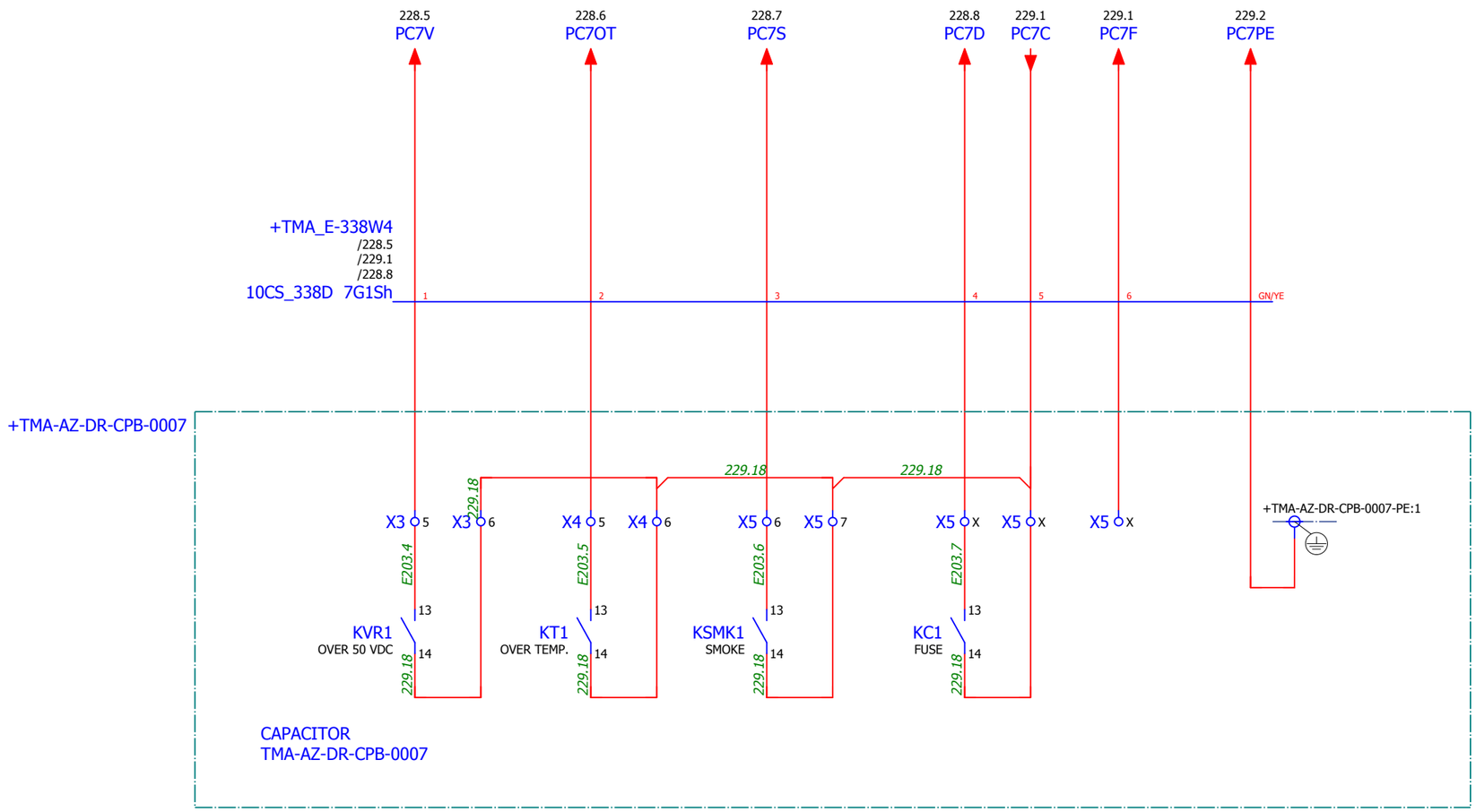

IK4 TEKNIKER Research Alliance

IK4-TEKNIKER
AVDA. OTAOLA 20
20600 Eibar (Gipuzkoa) Spain
Tfno.:(+34) 943 206744
Fax: (+34) 943 202757
Web: www.tekniker.es

Date	15/12/2017						
Reviewed	F.LÓPEZ	2.3	15/12/2017	JOSE MANUEL			
Drew by	JOSE MANUEL	Review	Date	Name	Review	Date	Name

3151_LSST

MCS Design Electrical Schematics

LSST TELESCOPE

Replaces | Replaced by

PHASE CAPACITOR CABINET 7 SIGNALS

Customer: EMPRESARIOS AGRUPADOS
C/Magallanes, 3
28015 MADRID
91 3098000
http://www.empresariosagrupados.es/

= E1
+ TMA-AZ-CS-CBT-0101

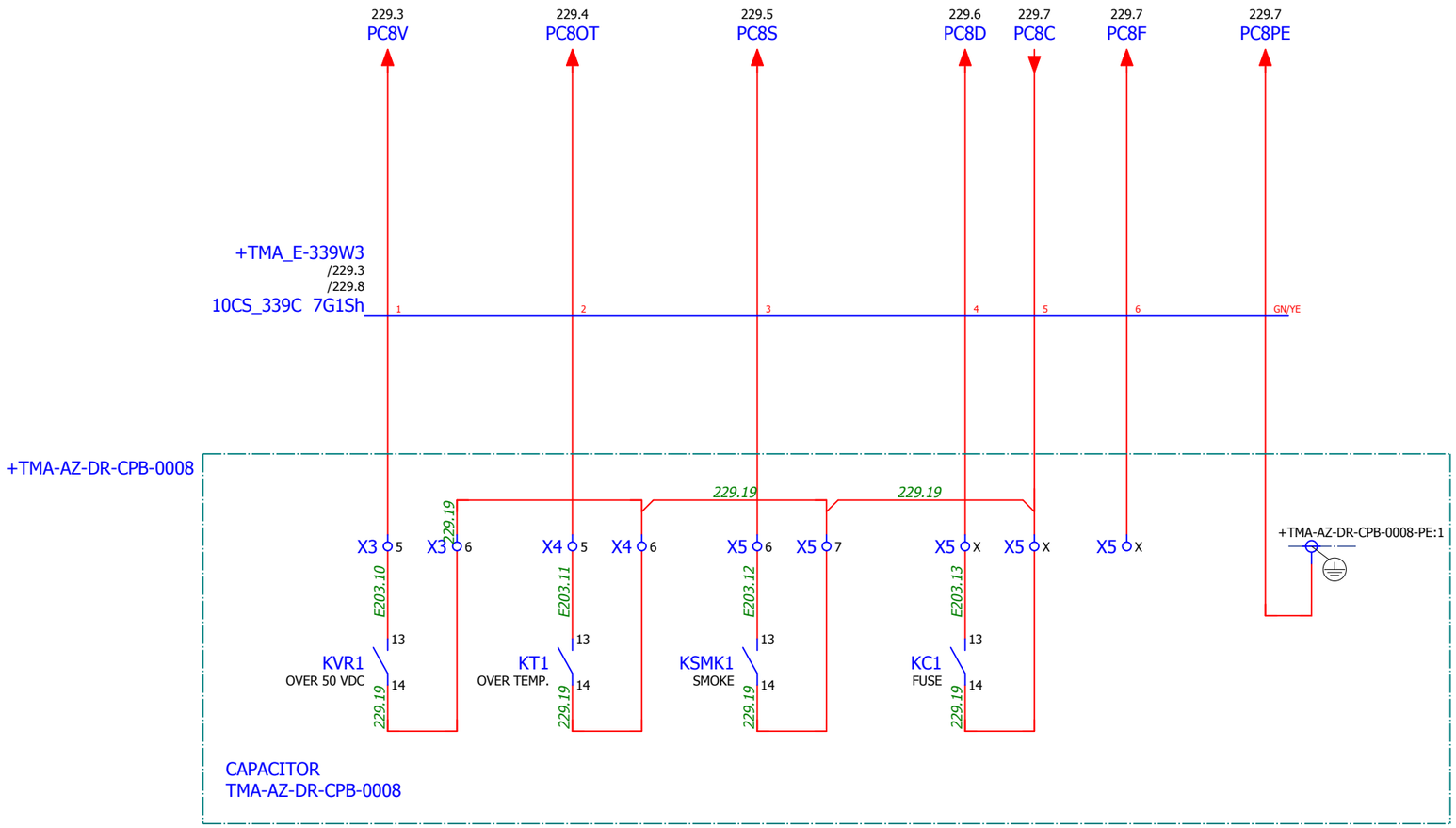

IK4-TEKNIKER
AVDA. OTAOLA 20
20600 Eibar (Gipuzkoa) Spain
Tfno.:(+34) 943 206744
Fax: (+34) 943 202757
Web: www.tekniker.es

Date	15/12/2017						
Reviewed	F.LÓPEZ	2.3	15/12/2017	JOSE MANUEL			
Drew by	JOSE MANUEL	Review	Date	Name	Review	Date	Name

3151_LSST
MCS Design Electrical Schematics
LSST TELESCOPE

Replaces
Replaced by

PHASE CAPACITOR CABINET 8 SIGNALS

Customer:
EMPRESARIOS AGRUPADOS
C/Magallanes, 3
28015 MADRID
91 3098000
http://www.empresariosagrupados.es/

= E1
+ TMA-AZ-CS-CBT-0101

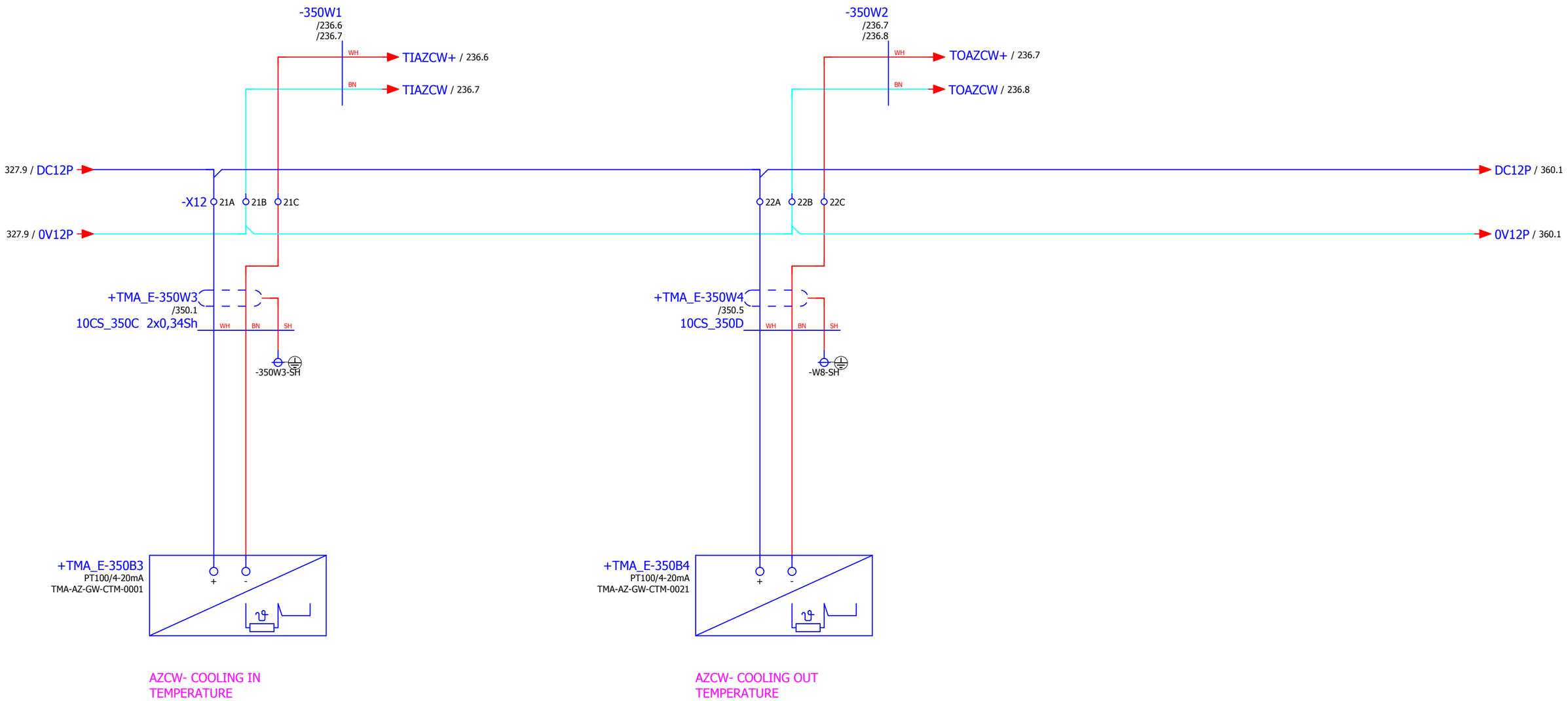

IK4 TEKNIKER Research Alliance

IK4-TEKNIKER
AVDA. OTAOLA 20
20600 Eibar (Gipuzkoa) Spain
Tfno.:(+34) 943 206744
Fax: (+34) 943 202757
Web: www.tekniker.es

Date	15/12/2017						
Reviewed	F.LÓPEZ	2.3	15/12/2017	JOSE MANUEL			
Drew by	JOSE MANUEL	Review	Date	Name	Review	Date	Name

3151_LSST

MCS Design Electrical Schematics

LSST TELESCOPE

Replaces | Replaced by

AZCW+ TEMPERATURE PRESSURE SENSORS

Customer: EMPRESARIOS AGRUPADOS
C/Magallanes, 3
28015 MADRID
91 3098000
http://www.empresariosagrupados.es/

= E1

+ TMA-AZ-CS-CBT-0101

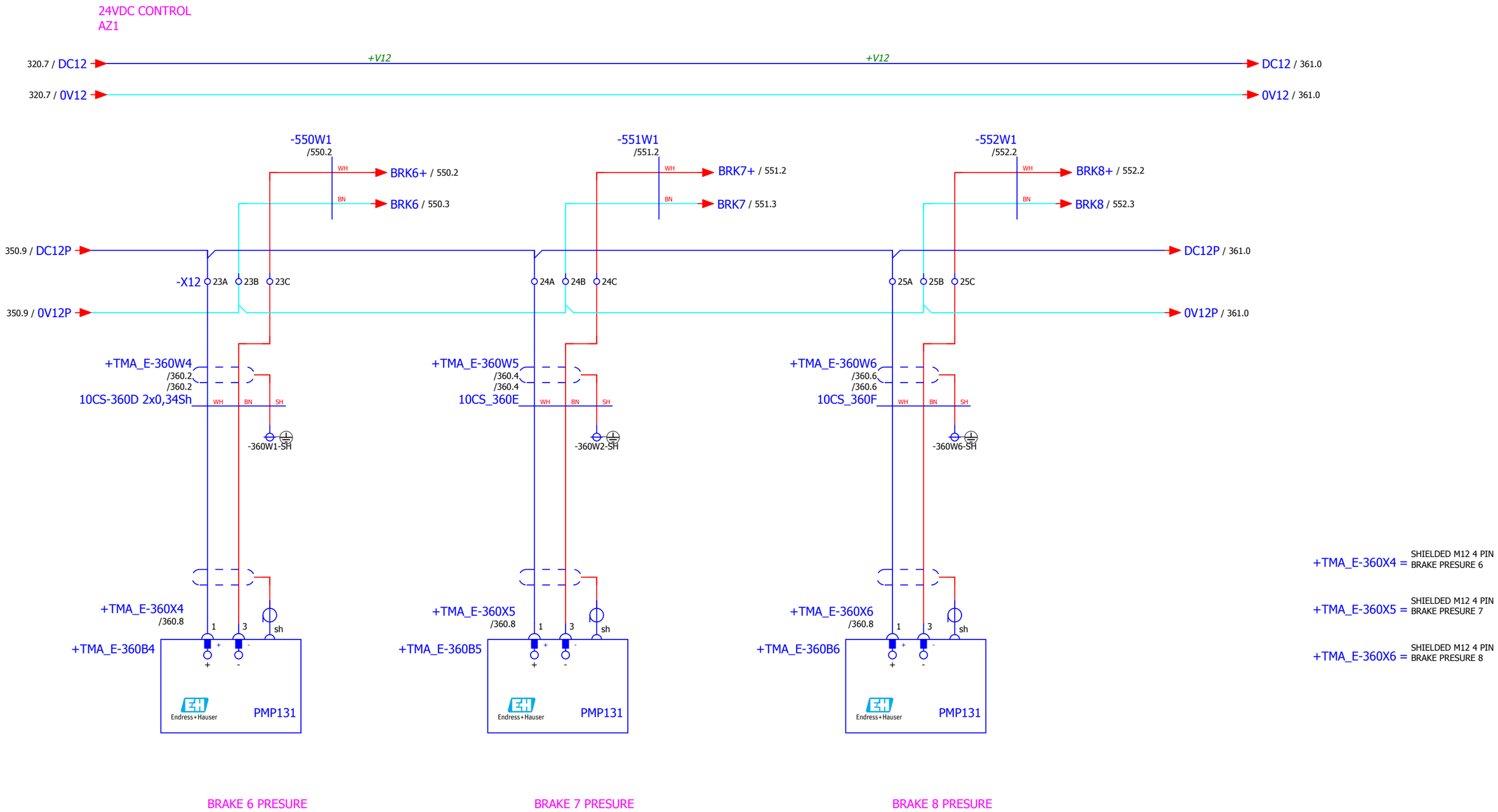

IK4 TEKNIKER Research Alliance

IK4-TEKNIKER
AVDA. OTAOLA 20
20600 Eibar (Gipuzkoa) Spain
Tfno.:(+34) 943 206744
Fax: (+34) 943 202757
Web: www.tekniker.es

Date	15/12/2017						
Reviewed	F.LÓPEZ	2.3	15/12/2017	JOSE MANUEL			
Drew by	JOSE MANUEL	Review	Date	Name	Review	Date	Name

3151_LSST

MCS Design Electrical Schematics

LSST TELESCOPE

Replaces

Replaced by

BRAKE PRESSURE

Customer: EMPRESARIOS AGRUPADOS

C/Magallanes, 3
28015 MADRID
91 3098000

http://www.empresariosagrupados.es/

= E1

+ TMA-AZ-CS-CBT-0101

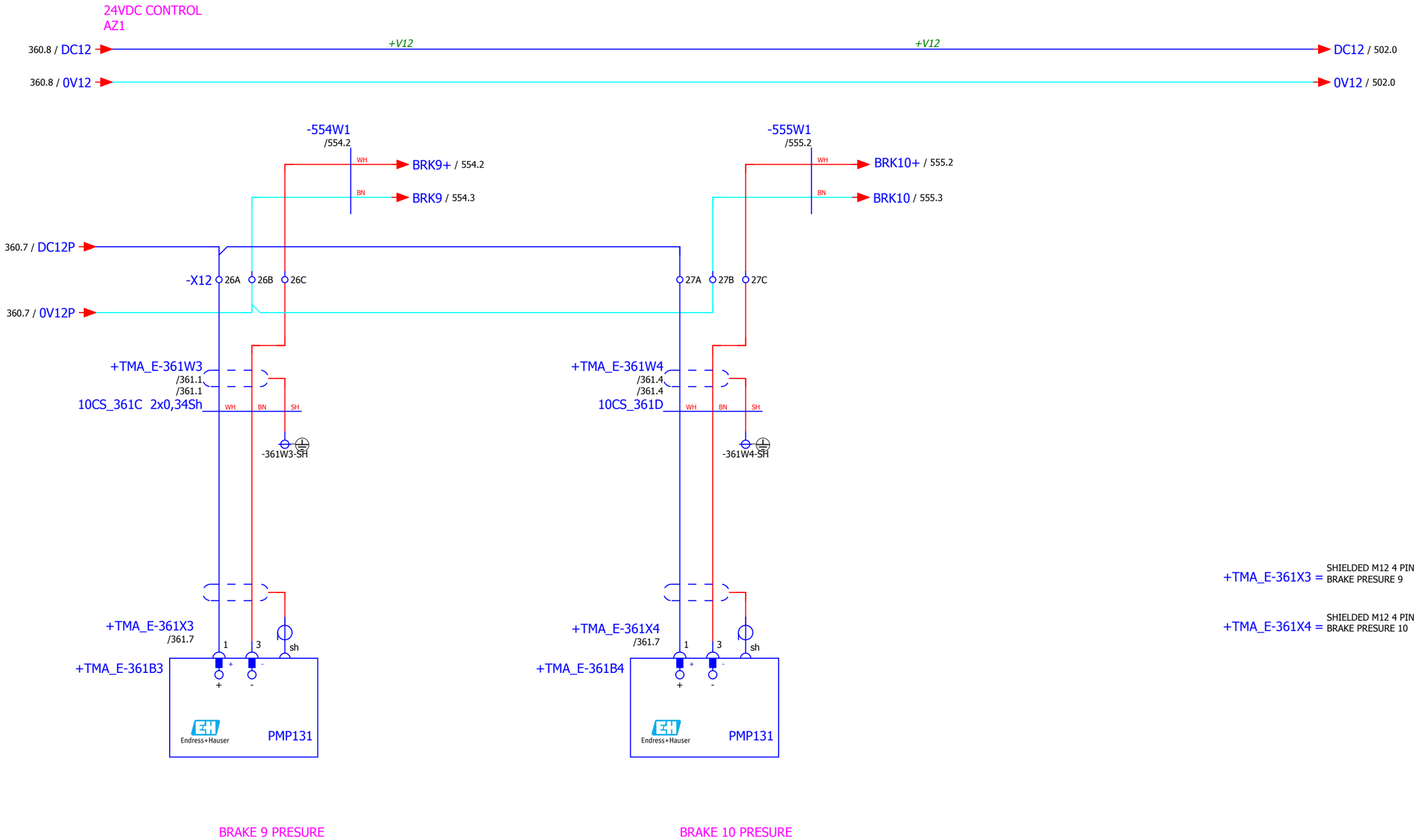

+TMA_E-361X3 = SHIELDED M12 4 PIN BRAKE PRESURE 9

+TMA_E-361X4 = SHIELDED M12 4 PIN BRAKE PRESURE 10

IK4-TEKNIKER
AVDA. OTAOLA 20
20600 Eibar (Gipuzkoa) Spain
Tfno.:(+34) 943 206744
Fax: (+34) 943 202757
Web: www.tekniker.es

Date	15/12/2017						
Reviewed	F.LÓPEZ	2.3	15/12/2017	JOSE MANUEL			
Drew by	JOSE MANUEL	Review	Date	Name	Review	Date	Name

3151_LSST
MCS Design Electrical Schematics
LSST TELESCOPE

Replaces | Replaced by

BRAKE PRESSURE

Customer: EMPRESARIOS AGRUPADOS
C/Magallanes, 3
28015 MADRID
91 3098000
http://www.empresariosagrupados.es/

= E1
+ TMA-AZ-CS-CBT-0101

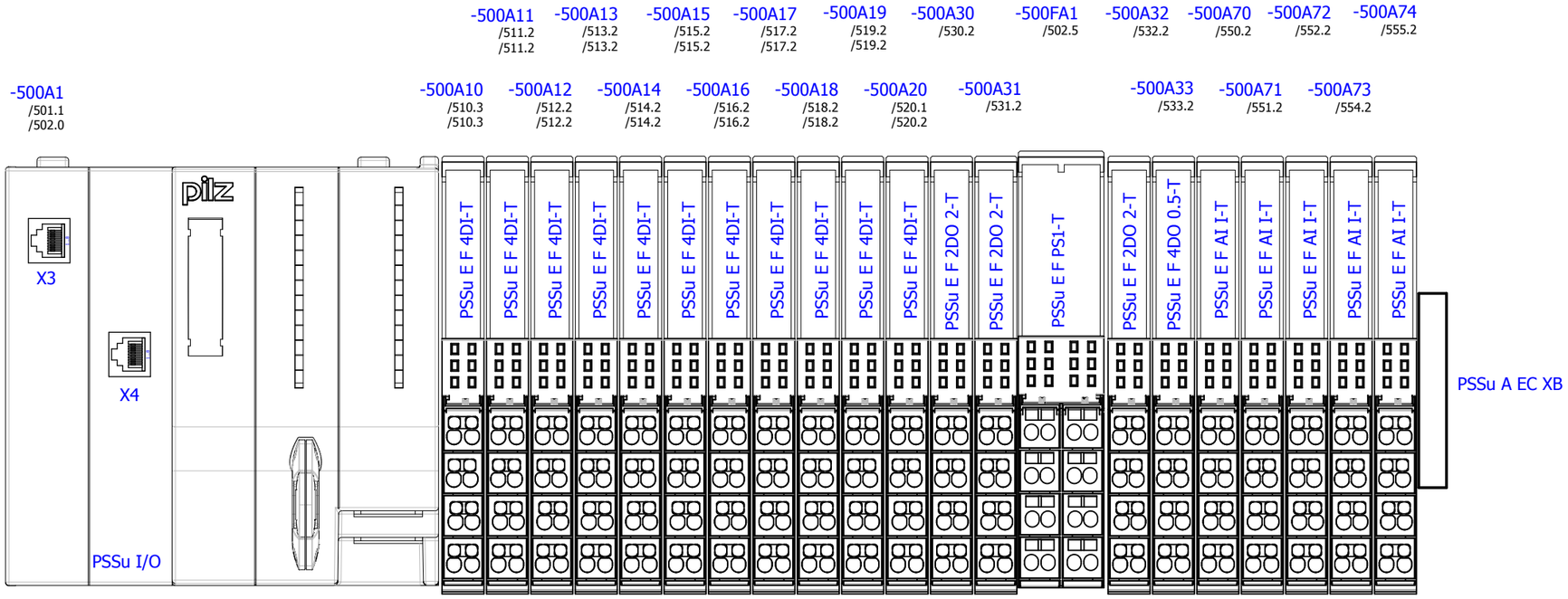

IK4-TEKNIKER
AVDA. OTAOLA 20
20600 Eibar (Gipuzkoa) Spain
Tfno.:(+34) 943 206744
Fax: (+34) 943 202757
Web: www.tekniker.es

Date	15/12/2017						
Reviewed	F.LÓPEZ	2.3	15/12/2017	JOSE MANUEL			
Drew by	JOSE MANUEL	Review	Date	Name	Review	Date	Name

3151_LSST

MCS Design Electrical Schematics

LSST TELESCOPE

Replaces

Replaced by

EMERGENCY PLC PSSuniversal

Customer:

EMPRESARIOS AGRUPADOS
C/Magallanes, 3
28015 MADRID
91 3098000

http://www.empresariosagrupados.es/

= E1

+ TMA-AZ-CS-CBT-0101

Page 500
Total number 710

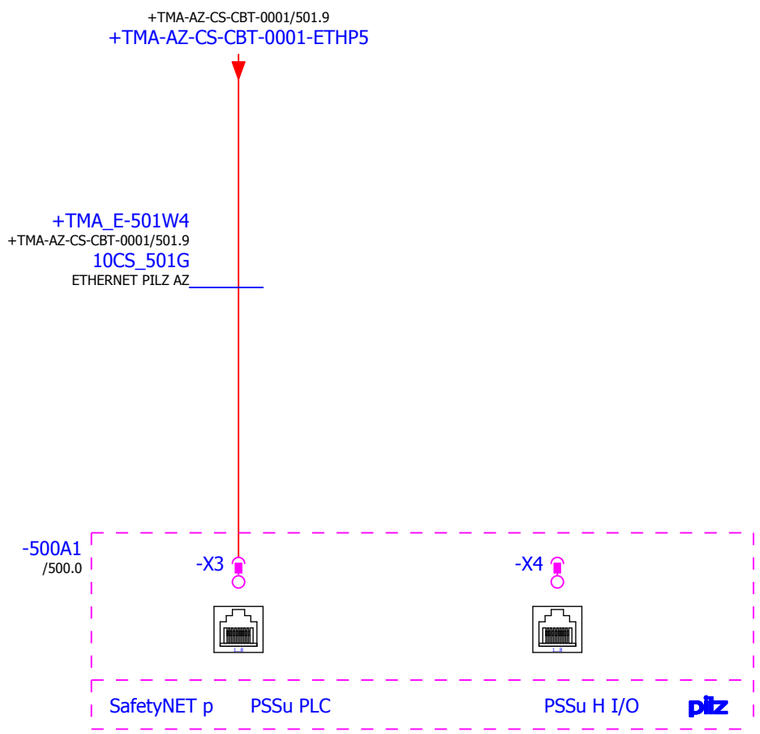

IK4 TEKNIKER Research Alliance

IK4-TEKNIKER
AVDA. OTAOLA 20
20600 Eibar (Gipuzkoa) Spain
Tfno.:(+34) 943 206744
Fax: (+34) 943 202757
Web: www.tekniker.es

Date	15/12/2017						
Reviewed	F.LÓPEZ	2.3	15/12/2017	JOSE MANUEL			
Drew by	JOSE MANUEL	Review	Date	Name	Review	Date	Name

3151_LSST

MCS Design Electrical Schematics

LSST TELESCOPE

Replaces | Replaced by

SAFETY NET

Customer:

EMPRESARIOS AGRUPADOS

C/Magallanes, 3
28015 MADRID
91 3098000

http://www.empresariosagrupados.es/

= E1

+ TMA-AZ-CS-CBT-0101

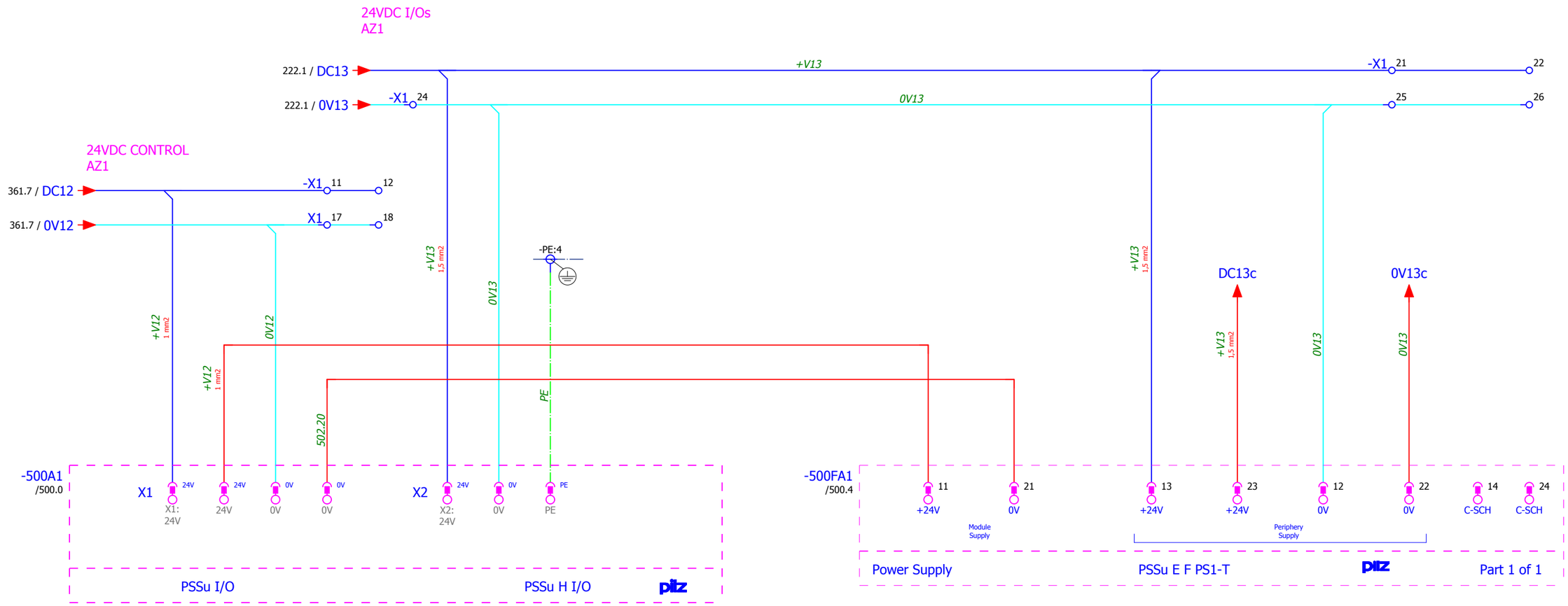

IK4-TEKNIKER
AVDA. OTAOLA 20
20600 Eibar (Gipuzkoa) Spain
Tfno.:(+34) 943 206744
Fax: (+34) 943 202757
Web: www.tekniker.es

Date	14/12/2017						
Reviewed	F.LÓPEZ	2.3	15/12/2017	JOSE MANUEL			
Drew by	JOSE MANUEL	Review	Date	Name	Review	Date	Name

3151_LSST
MCS Design Electrical Schematics
LSST TELESCOPE
Replaces
Replaced by

POWER SAFETY PSS

Customer:
EMPRESARIOS AGRUPADOS
C/Magallanes, 3
28015 MADRID
91 3098000
http://www.empresariosagrupados.es/

= E1
+ TMA-AZ-CS-CBT-0101

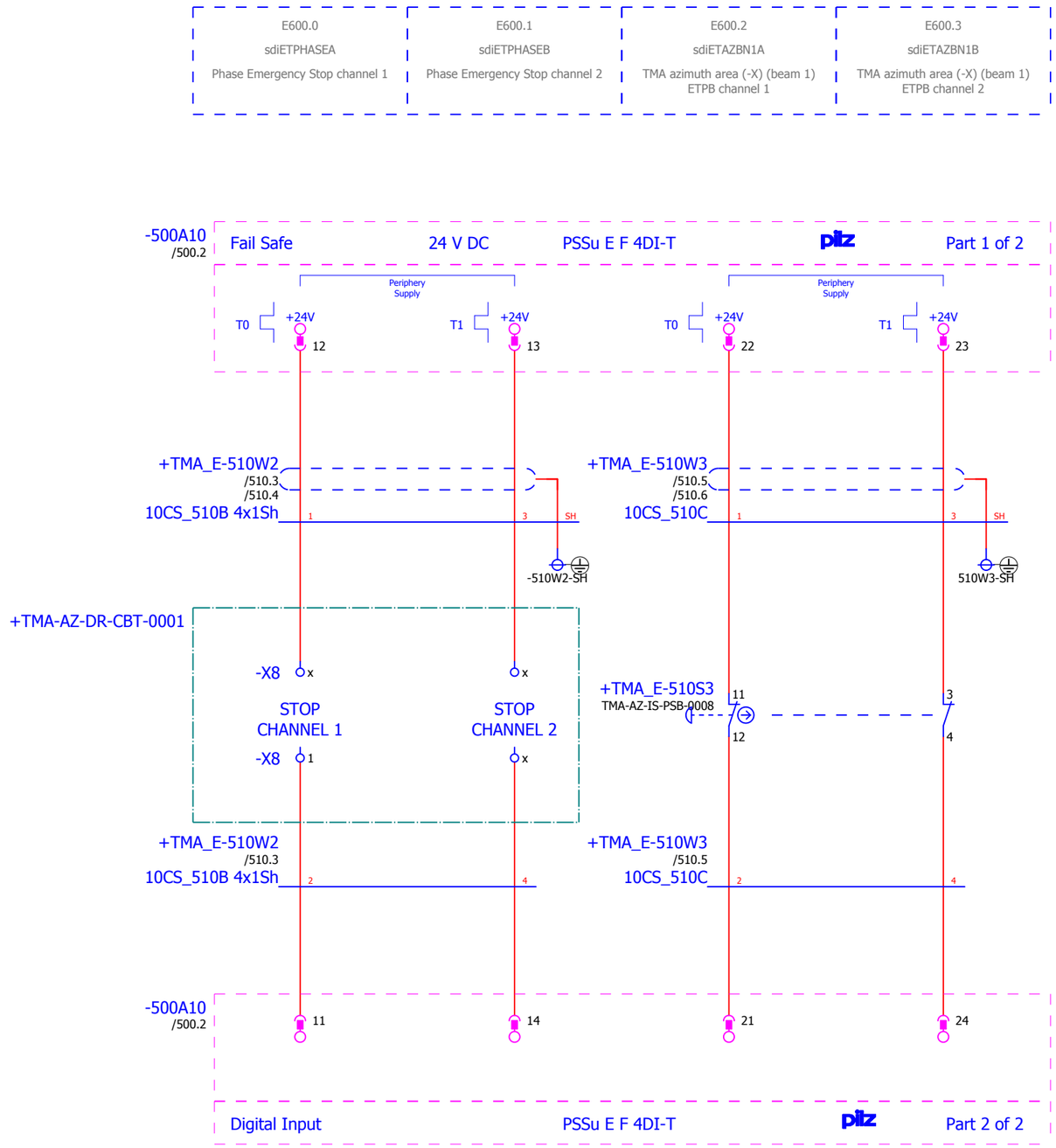

IK4 TEKNIKER Research Alliance

IK4-TEKNIKER
AVDA. OTAOLA 20
20600 Eibar (Gipuzkoa) Spain
Tfno.:(+34) 943 206744
Fax: (+34) 943 202757
Web: www.tekniker.es

Date	15/12/2017						
Reviewed	F.LÓPEZ	2.3	15/12/2017	JOSE MANUEL			
Drew by	JOSE MANUEL	Review	Date	Name	Review	Date	Name

3151_LSST

MCS Design Electrical Schematics

LSST TELESCOPE

Replaces | Replaced by

SAFETY DIGITAL INPUTS

Customer: EMPRESARIOS AGRUPADOS
C/Magallanes, 3
28015 MADRID
91 3098000
http://www.empresariosagrupados.es/

= E1

+ TMA-AZ-CS-CBT-0101

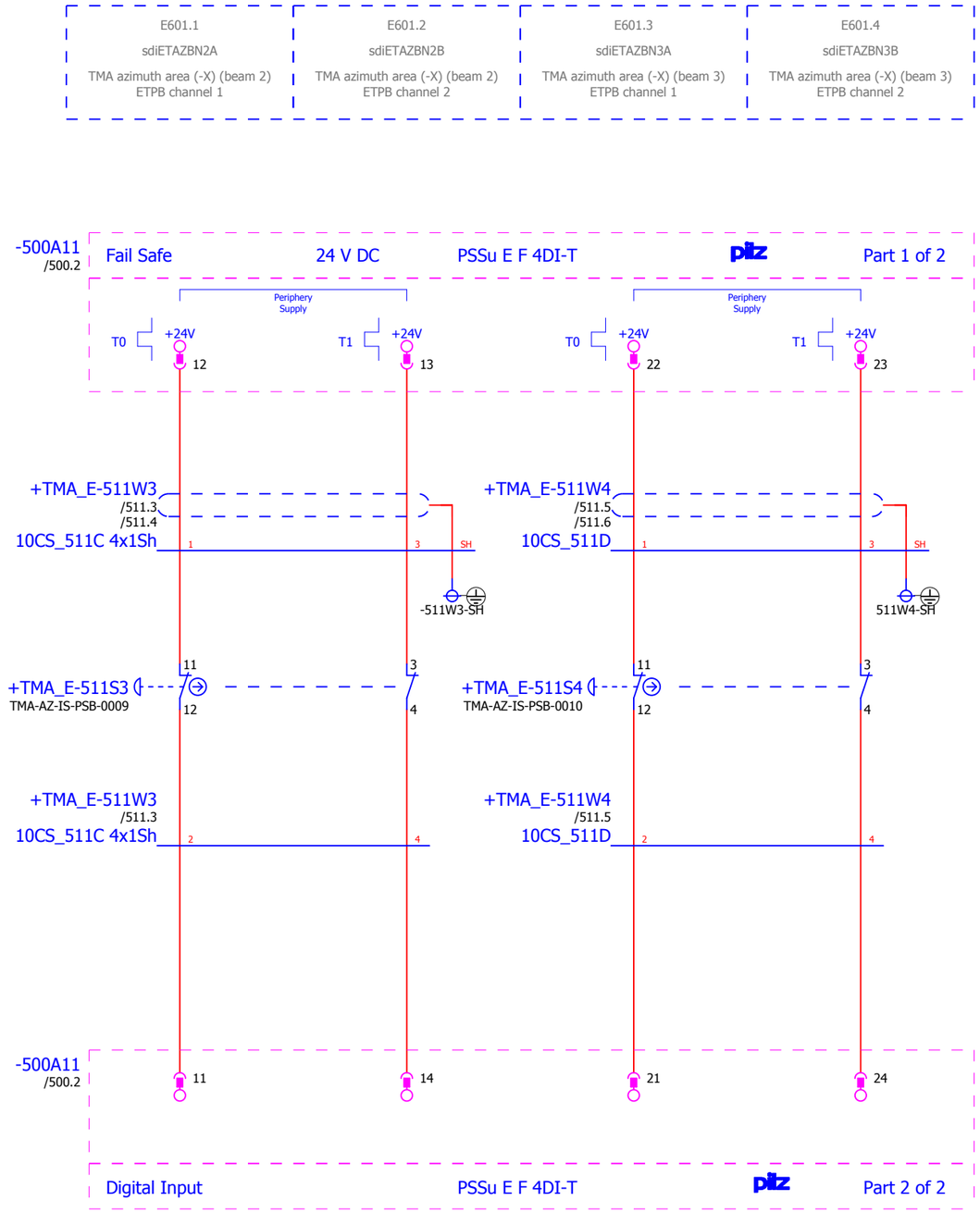

IK4 TEKNIKER Research Alliance

IK4-TEKNIKER
AVDA. OTAOLA 20
20600 Eibar (Gipuzkoa) Spain
Tfno.:(+34) 943 206744
Fax: (+34) 943 202757
Web: www.tekniker.es

Date	15/12/2017						
Reviewed	F.LÓPEZ	2.3	15/12/2017	JOSE MANUEL			
Drew by	JOSE MANUEL	Review	Date	Name	Review	Date	Name

3151_LSST

MCS Design Electrical Schematics

LSST TELESCOPE

Replaces | Replaced by

SAFETY DIGITAL INPUTS

Customer: EMPRESARIOS AGRUPADOS
C/Magallanes, 3
28015 MADRID
91 3098000
http://www.empresariosagrupados.es/

= E1
+ TMA-AZ-CS-CBT-0101

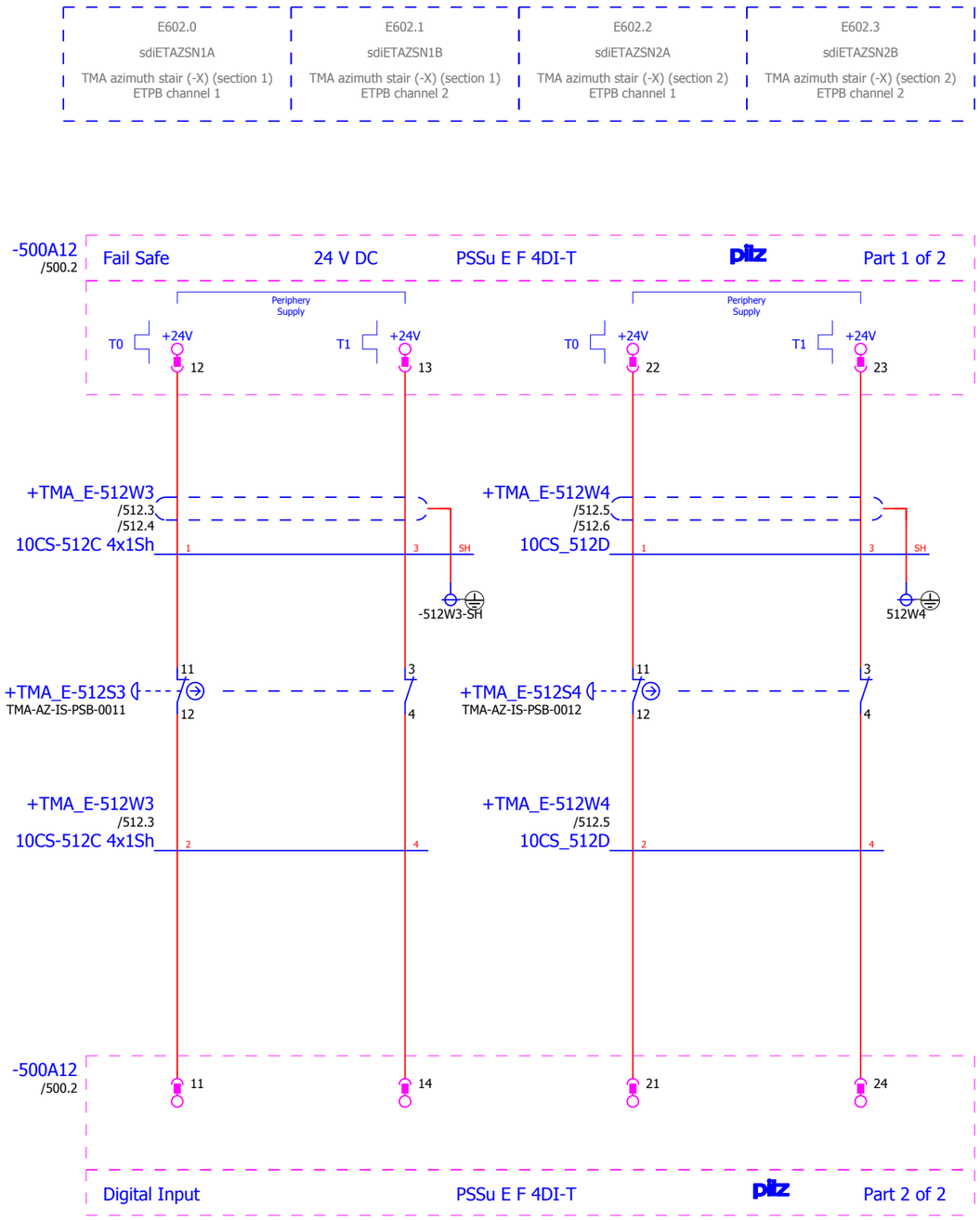

IK4-TEKNIKER
AVDA. OTAOLA 20
20600 Eibar (Gipuzkoa) Spain
Tfno.:(+34) 943 206744
Fax: (+34) 943 202757
Web: www.tekniker.es

Date	15/12/2017						
Reviewed	F.LÓPEZ	2.3	15/12/2017	JOSE MANUEL			
Drew by	JOSE MANUEL	Review	Date	Name	Review	Date	Name

3151_LSST
MCS Design Electrical Schematics
LSST TELESCOPE

Replaces | Replaced by

SAFETY DIGITAL INPUTS

Customer: EMPRESARIOS AGRUPADOS
C/Magallanes, 3
28015 MADRID
91 3098000
http://www.empresariosagrupados.es/

= E1
+ TMA-AZ-CS-CBT-0101

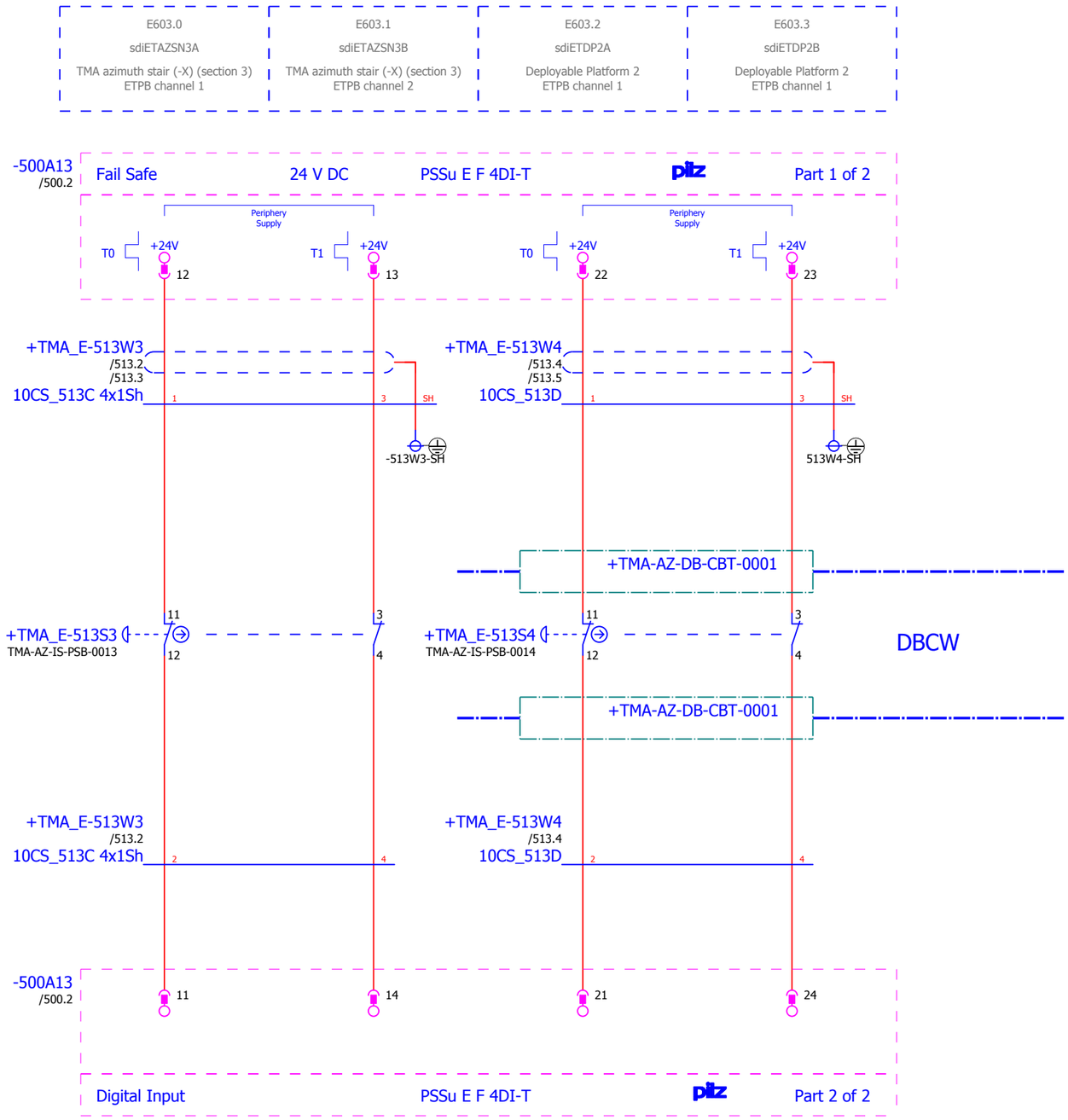

IK4-TEKNIKER
AVDA. OTAOLA 20
20600 Eibar (Gipuzkoa) Spain
Tfno.:(+34) 943 206744
Fax: (+34) 943 202757
Web: www.tekniker.es

Date	15/12/2017							
Reviewed	F.LÓPEZ	2.3	15/12/2017	JOSE MANUEL				
Drew by	JOSE MANUEL	Review	Date	Name	Review	Date	Name	

3151_LSST
MCS Design Electrical Schematics
LSST TELESCOPE
Replaces
Replaced by

SAFETY DIGITAL INPUTS

Customer:
EMPRESARIOS AGRUPADOS
C/Magallanes, 3
28015 MADRID
91 3098000
http://www.empresariosagrupados.es/

= E1
+ TMA-AZ-CS-CBT-0101

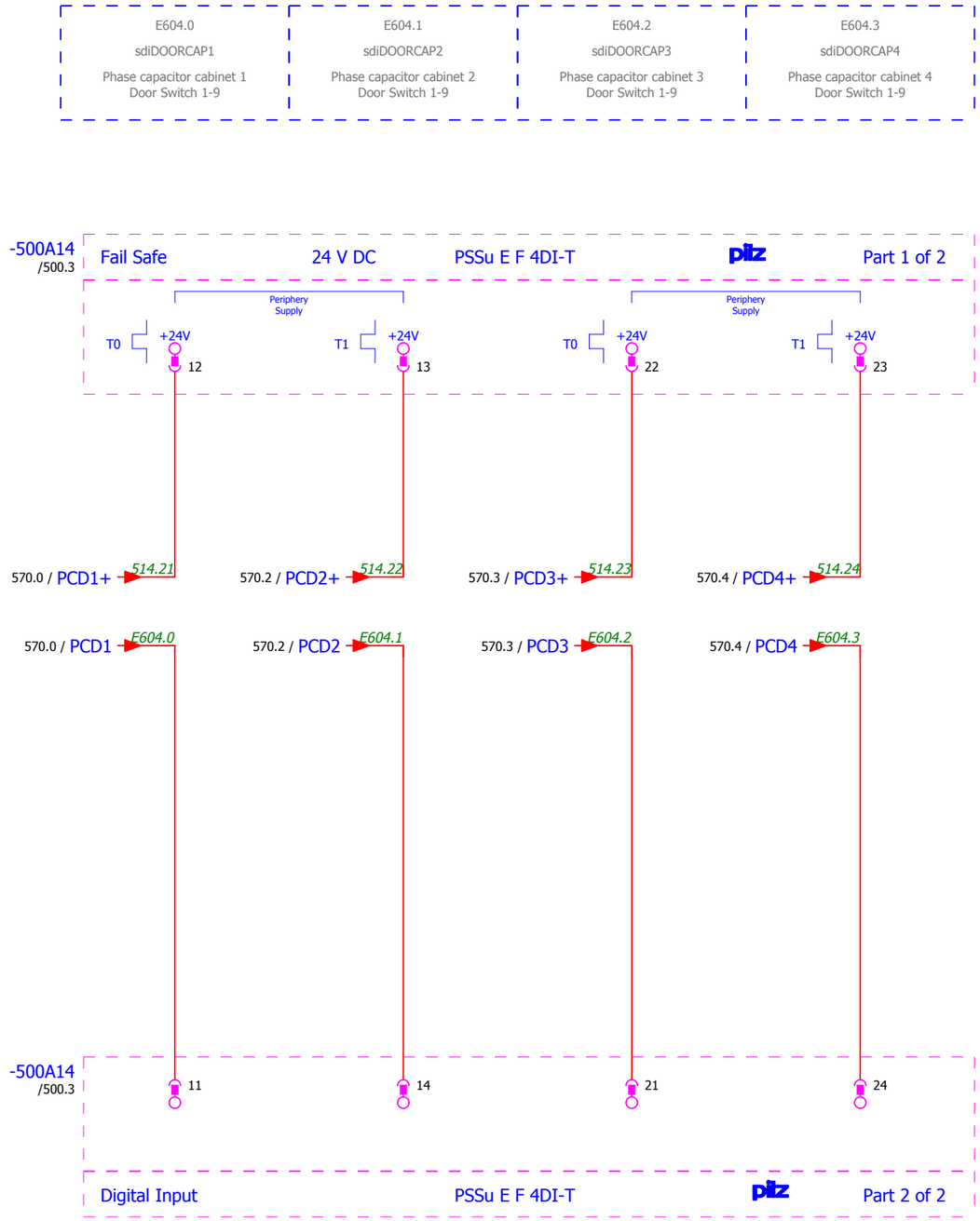

IK4-TEKNIKER
AVDA. OTAOLA 20
20600 Eibar (Gipuzkoa) Spain
Tfno.:(+34) 943 206744
Fax: (+34) 943 202757
Web: www.tekniker.es

Date	14/12/2017						
Reviewed	F.LÓPEZ	2.3	15/12/2017	JOSE MANUEL			
Drew by	JOSE MANUEL	Review	Date	Name	Review	Date	Name

3151_LSST

MCS Design Electrical Schematics

LSST TELESCOPE

Replaces | Replaced by

SAFETY DIGITAL INPUTS

Customer: EMPRESARIOS AGRUPADOS
C/Magallanes, 3
28015 MADRID
91 3098000
http://www.empresariosagrupados.es/

= E1

+ TMA-AZ-CS-CBT-0101

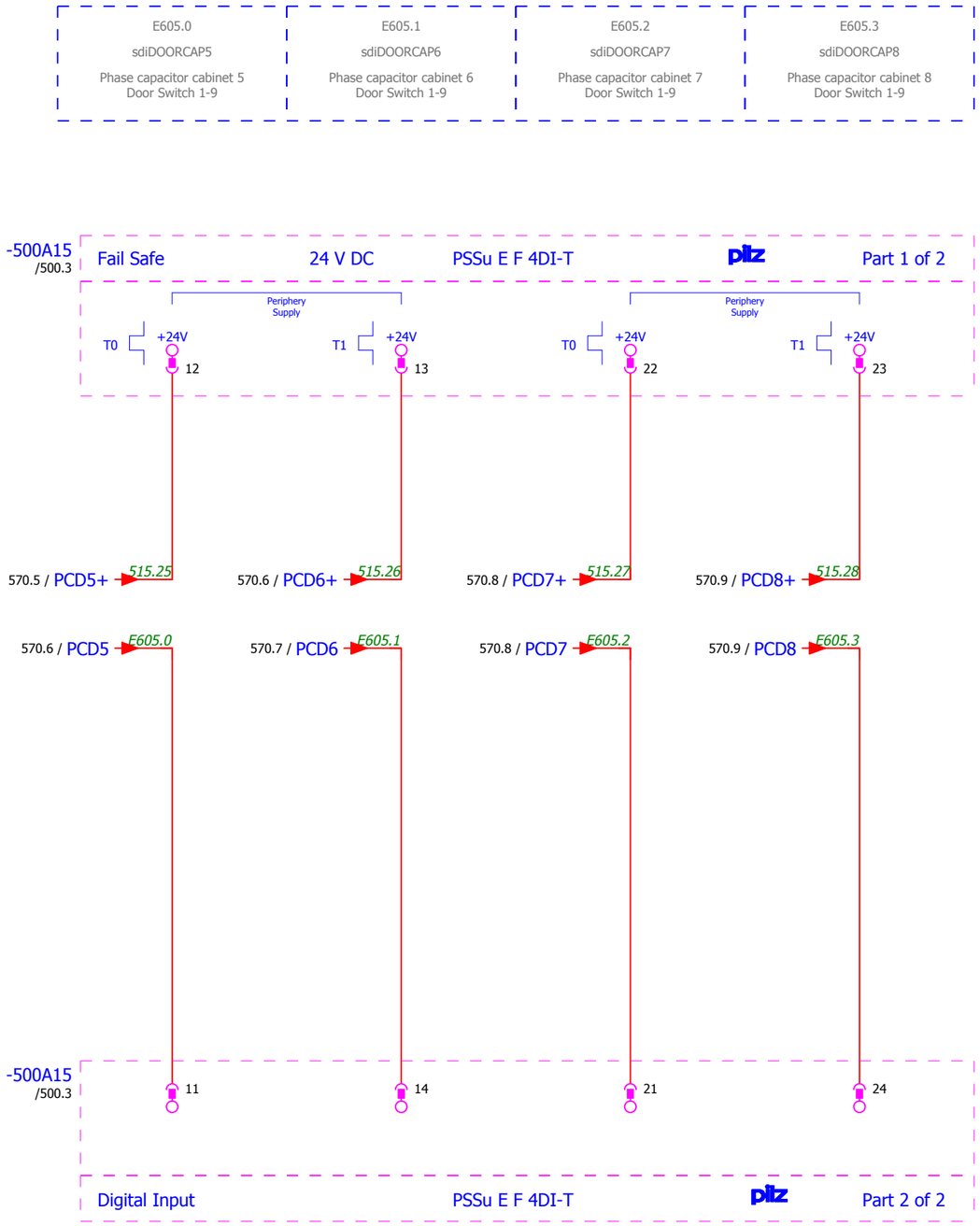

IK4-TEKNIKER
AVDA. OTAOLA 20
20600 Eibar (Gipuzkoa) Spain
Tfno.:(+34) 943 206744
Fax: (+34) 943 202757
Web: www.tekniker.es

Date	14/12/2017						
Reviewed	F.LÓPEZ	2.3	15/12/2017	JOSE MANUEL			
Drew by	JOSE MANUEL	Review	Date	Name	Review	Date	Name

3151_LSST

MCS Design Electrical Schematics

LSST TELESCOPE

Replaces

Replaced by

SAFETY DIGITAL INPUTS

Customer: EMPRESARIOS AGRUPADOS
C/Magallanes, 3
28015 MADRID
91 3098000
http://www.empresariosagrupados.es/

= E1

+ TMA-AZ-CS-CBT-0101

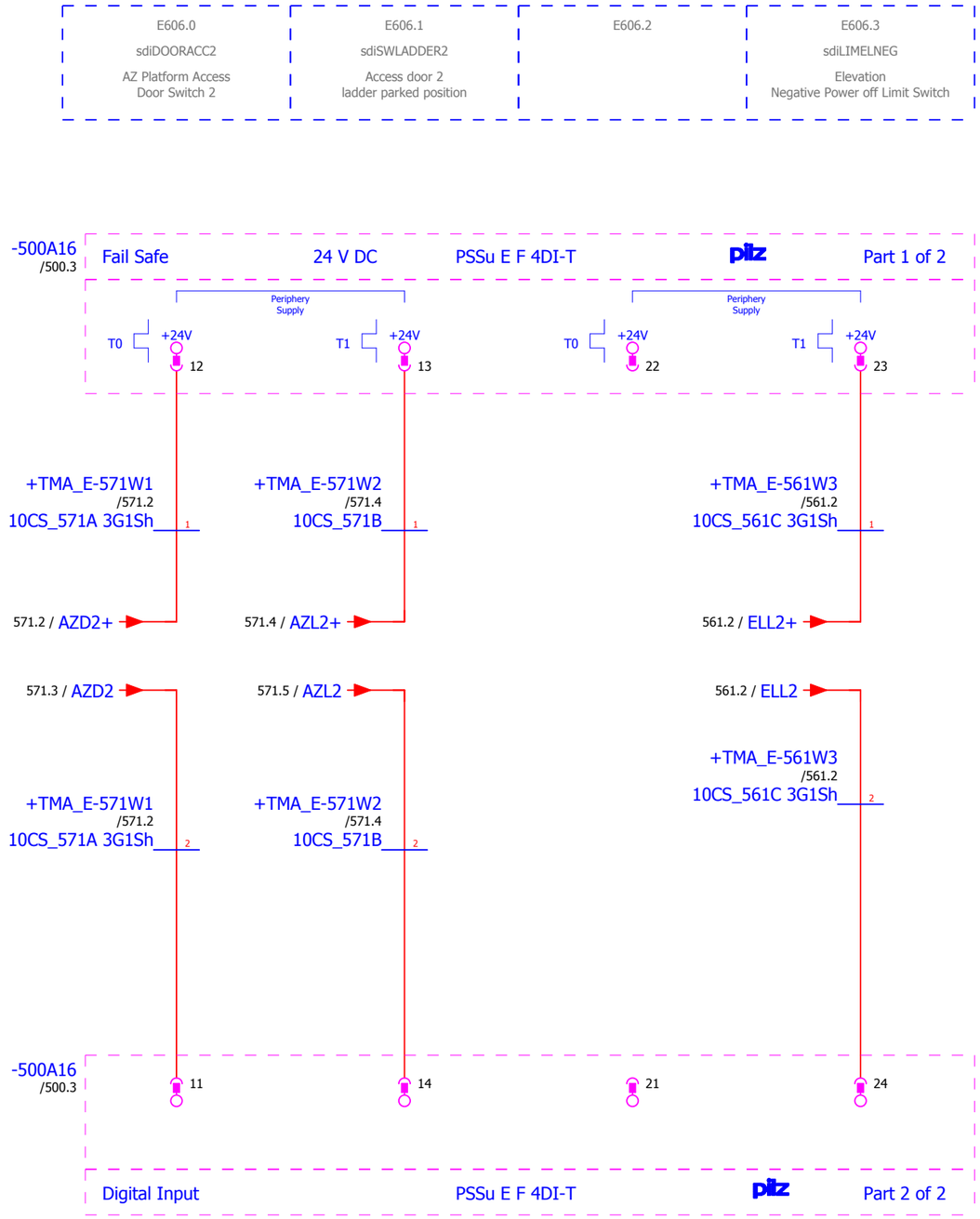

IK4 TEKNIKER Research Alliance

IK4-TEKNIKER
AVDA. OTAOLA 20
20600 Eibar (Gipuzkoa) Spain
Tfno.:(+34) 943 206744
Fax: (+34) 943 202757
Web: www.tekniker.es

Date	15/12/2017						
Reviewed	F.LÓPEZ	2.3	15/12/2017	JOSE MANUEL			
Drew by	JOSE MANUEL	Review	Date	Name	Review	Date	Name

3151_LSST

MCS Design Electrical Schematics

LSST TELESCOPE

Replaces | Replaced by

SAFETY DIGITAL INPUTS

Customer: EMPRESARIOS AGRUPADOS

C/Magallanes, 3
28015 MADRID
91 3098000
http://www.empresariosagrupados.es/

= E1

+ TMA-AZ-CS-CBT-0101

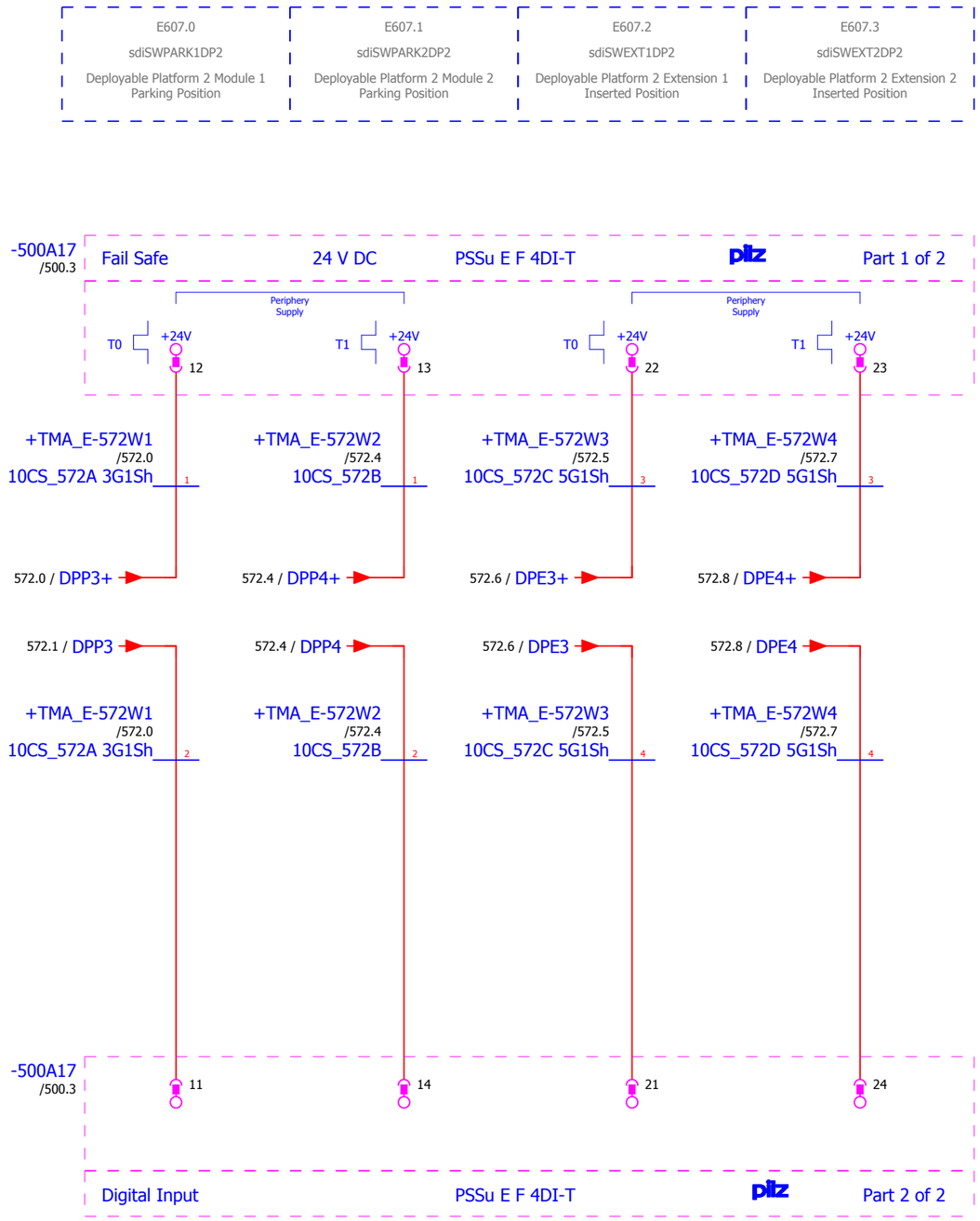

IK4-TEKNIKER
AVDA. OTAOLA 20
20600 Eibar (Gipuzkoa) Spain
Tfno.:(+34) 943 206744
Fax: (+34) 943 202757
Web: www.tekniker.es

Date	15/12/2017						
Reviewed	F.LÓPEZ	2.3	15/12/2017	JOSE MANUEL			
Drew by	JOSE MANUEL	Review	Date	Name	Review	Date	Name

3151_LSST
MCS Design Electrical Schematics
LSST TELESCOPE

Replaces | Replaced by

SAFETY DIGITAL INPUTS

Customer: EMPRESARIOS AGRUPADOS
C/Magallanes, 3
28015 MADRID
91 3098000
http://www.empresariosagrupados.es/

= E1
+ TMA-AZ-CS-CBT-0101

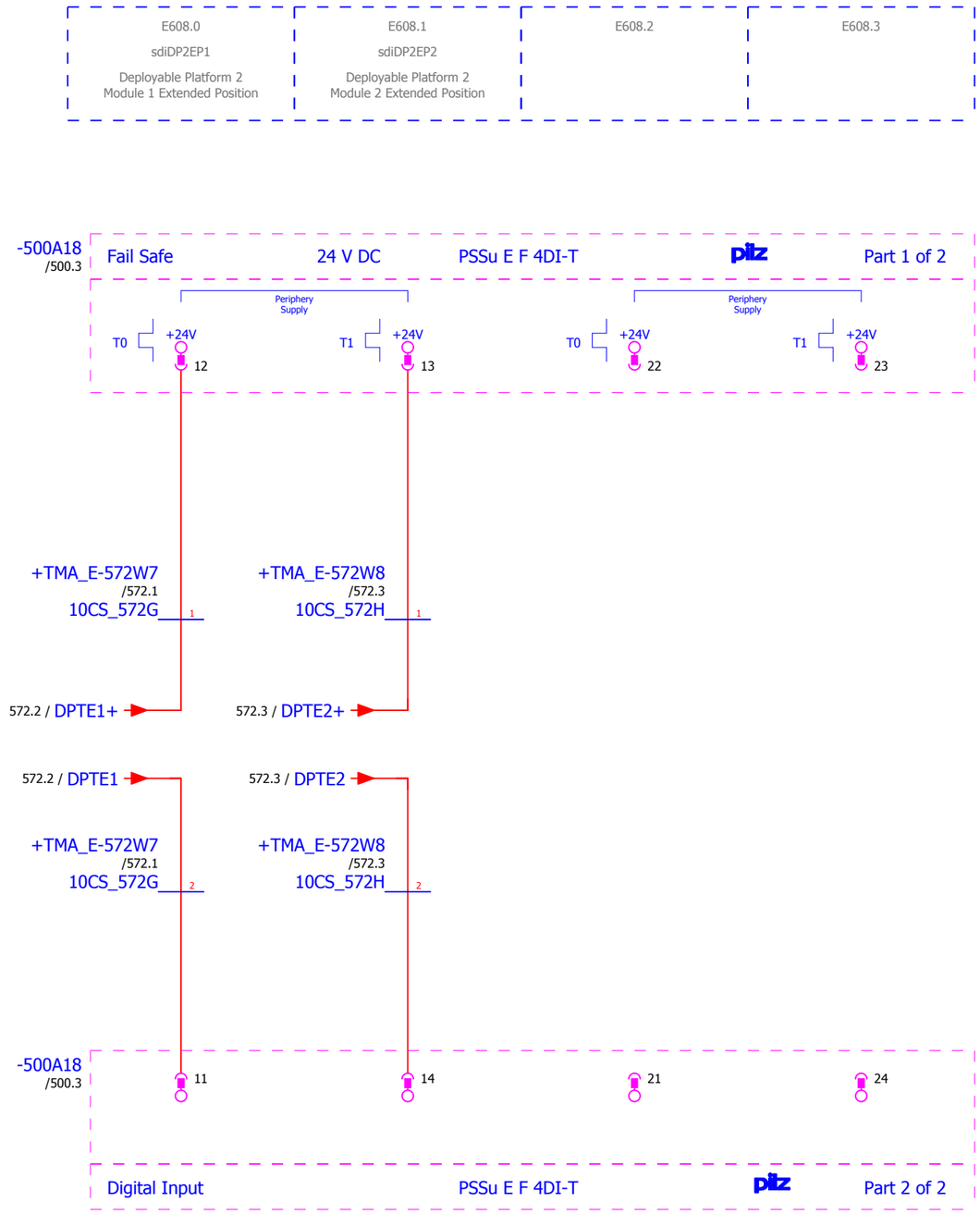

IK4 TEKNIKER Research Alliance
IK4-TEKNIKER
AVDA. OTAOLA 20
20600 Eibar (Gipuzkoa) Spain
Tfno.:(+34) 943 206744
Fax: (+34) 943 202757
Web: www.tekniker.es

Date	15/12/2017						
Reviewed	F.LÓPEZ	2.3	15/12/2017	JOSE MANUEL			
Drew by	JOSE MANUEL	Review	Date	Name	Review	Date	Name

3151_LSST
MCS Design Electrical Schematics
LSST TELESCOPE
Replaces
Replaced by

SAFETY DIGITAL INPUTS

Customer:
EMPRESARIOS AGRUPADOS
C/Magallanes, 3
28015 MADRID
91 3098000
http://www.empresariosagrupados.es/

= E1
+ TMA-AZ-CS-CBT-0101

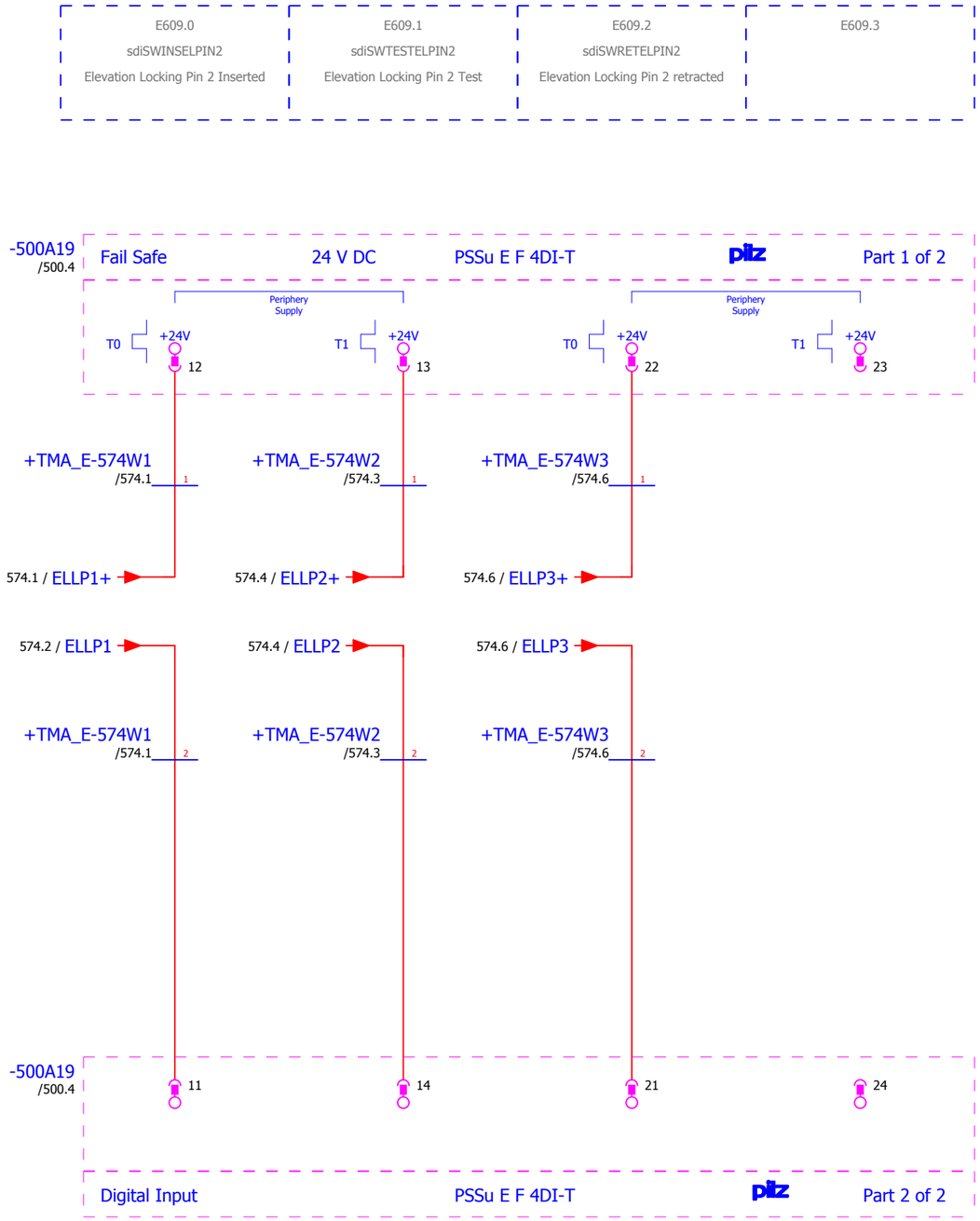

◁ 518

520 ▷

IK4-TEKNIKER
AVDA. OTAOLA 20
20600 Eibar (Gipuzkoa) Spain
Tfno.:(+34) 943 206744
Fax: (+34) 943 202757
Web: www.tekniker.es

Date	15/12/2017						
Reviewed	F.LÓPEZ	2.3	15/12/2017	JOSE MANUEL			
Drew by	JOSE MANUEL	Review	Date	Name	Review	Date	Name

3151_LSST
MCS Design Electrical Schematics
LSST TELESCOPE
Replaces
Replaced by

SAFETY DIGITAL INPUTS

Customer:
EMPRESARIOS AGRUPADOS
C/Magallanes, 3
28015 MADRID
91 3098000
http://www.empresariosagrupados.es/

= E1
+ TMA-AZ-CS-CBT-0101

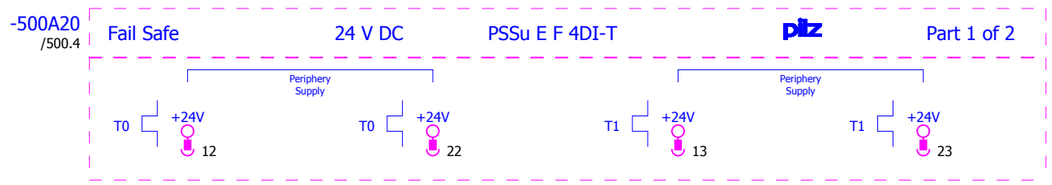

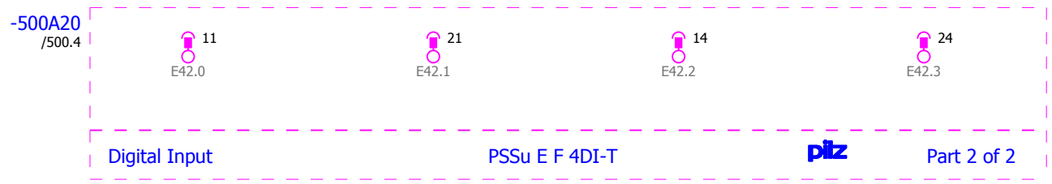

IK4 TEKNIKER Research Alliance
IK4-TEKNIKER
AVDA. OTAOLA 20
20600 Eibar (Gipuzkoa) Spain
Tfno.:(+34) 943 206744
Fax: (+34) 943 202757
Web: www.tekniker.es

Date	23/02/2017						
Reviewed	F.LÓPEZ	2.3	15/12/2017	JOSE MANUEL			
Drew by	jcastano	Review	Date	Name	Review	Date	Name

3151_LSST
MCS Design Electrical Schematics
LSST TELESCOPE
Replaces
Replaced by

SAFETY DIGITAL INPUTS

Customer:
EMPRESARIOS AGRUPADOS
C/Magallanes, 3
28015 MADRID
91 3098000
http://www.empresariosagrupados.es/

= E1
+ TMA-AZ-CS-CBT-0101

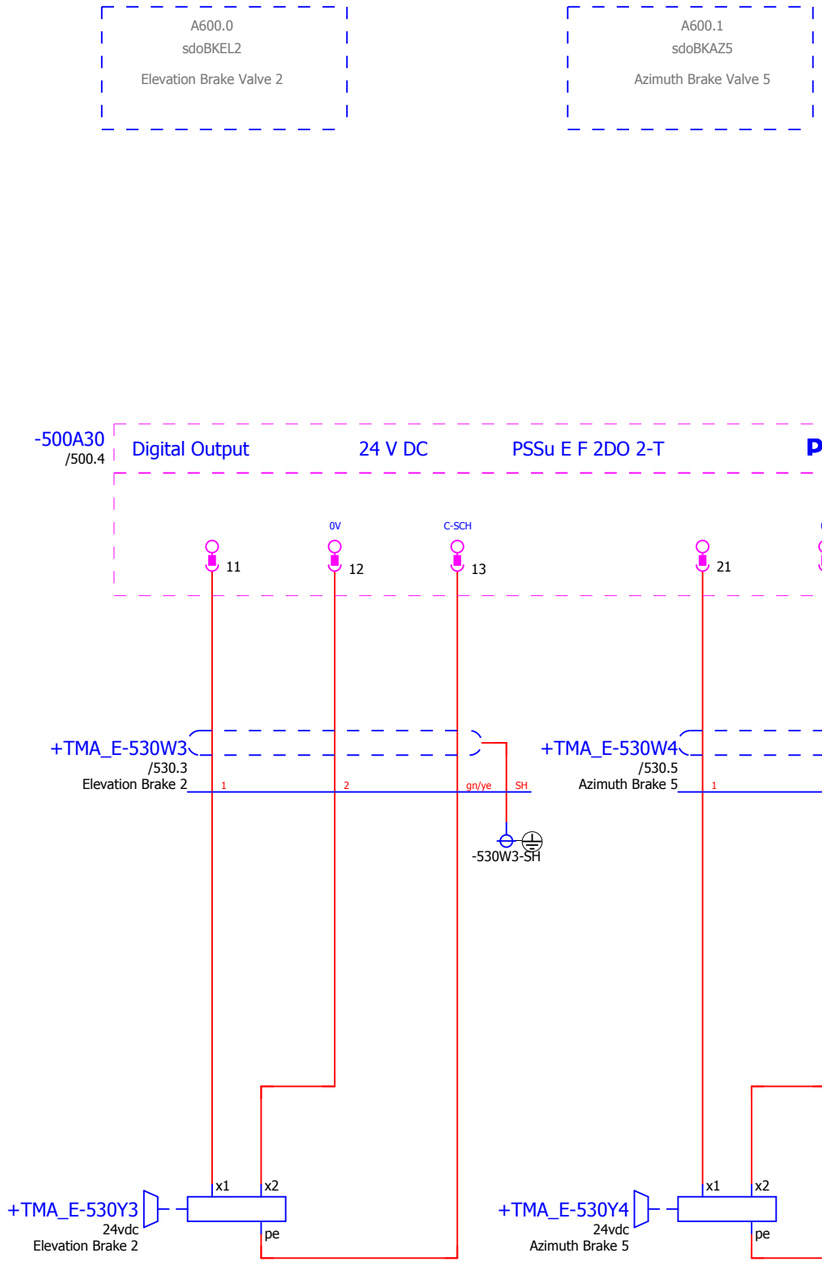

IK4 TEKNIKER Research Alliance

IK4-TEKNIKER
AVDA. OTAOLA 20
20600 Eibar (Gipuzkoa) Spain
Tfno.:(+34) 943 206744
Fax: (+34) 943 202757
Web: www.tekniker.es

Date	15/12/2017						
Reviewed	F.LÓPEZ	2.3	15/12/2017	JOSE MANUEL			
Drew by	JOSE MANUEL	Review	Date	Name	Review	Date	Name

3151_LSST

MCS Design Electrical Schematics

LSST TELESCOPE

Replaces | Replaced by

SAFETY DIGITAL OUTPUTS

Customer: EMPRESARIOS AGRUPADOS
C/Magallanes, 3
28015 MADRID
91 3098000
http://www.empresariosagrupados.es/

= E1
+ TMA-AZ-CS-CBT-0101

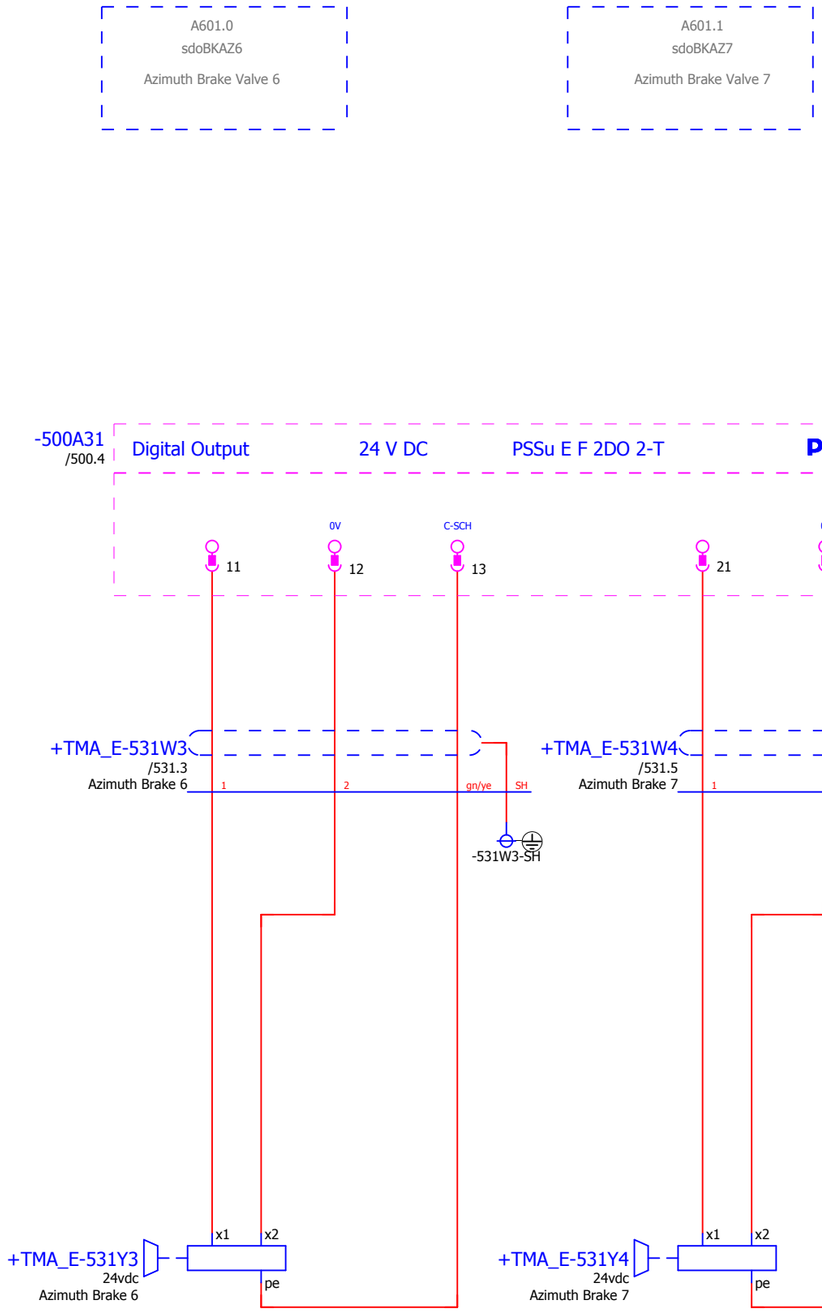

IK4 TEKNIKER Research Alliance

IK4-TEKNIKER
AVDA. OTAOLA 20
20600 Eibar (Gipuzkoa) Spain
Tfno.:(+34) 943 206744
Fax: (+34) 943 202757
Web: www.tekniker.es

Date	15/12/2017						
Reviewed	F.LÓPEZ	2.3	15/12/2017	JOSE MANUEL			
Drew by	JOSE MANUEL	Review	Date	Name	Review	Date	Name

3151_LSST

MCS Design Electrical Schematics

LSST TELESCOPE

Replaces | Replaced by

SAFETY DIGITAL OUTPUTS

Customer: EMPRESARIOS AGRUPADOS

EMPRESARIOS AGRUPADOS
C/Magallanes, 3
28015 MADRID
91 3098000
http://www.empresariosagrupados.es/

= E1

+ TMA-AZ-CS-CBT-0101

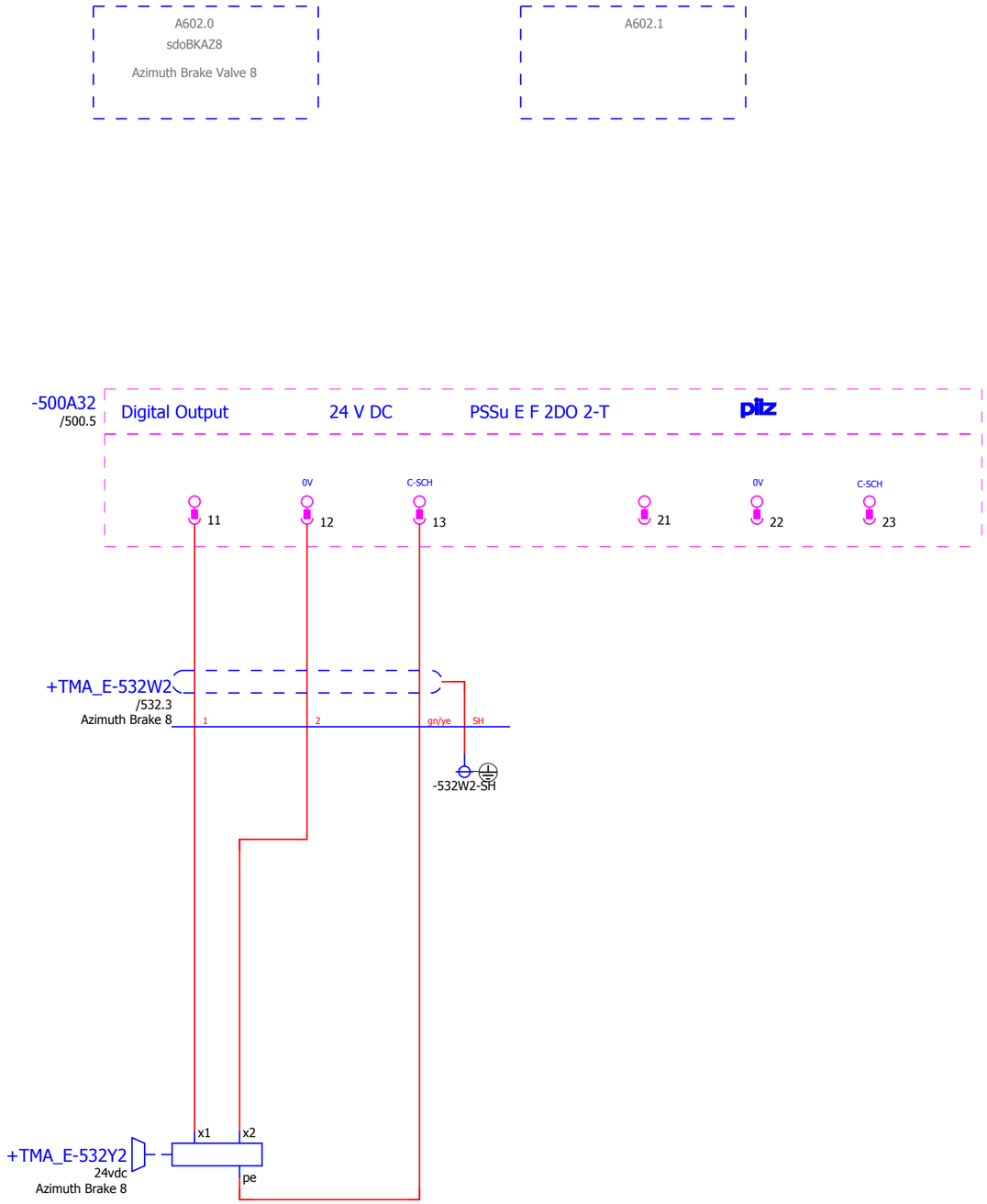

IK4 TEKNIKER Research Alliance
IK4-TEKNIKER
AVDA. OTAOLA 20
20600 Eibar (Gipuzkoa) Spain
Tfno.:(+34) 943 206744
Fax: (+34) 943 202757
Web: www.tekniker.es

Date	15/12/2017						
Reviewed	F.LÓPEZ	2.3	15/12/2017	JOSE MANUEL			
Drew by	JOSE MANUEL	Review	Date	Name	Review	Date	Name

3151_LSST
MCS Design Electrical Schematics
LSST TELESCOPE
Replaces
Replaced by

SAFETY DIGITAL OUTPUTS

Customer:
EMPRESARIOS AGRUPADOS
C/Magallanes, 3
28015 MADRID
91 3098000
http://www.empresariosagrupados.es/

= E1
+ TMA-AZ-CS-CBT-0101

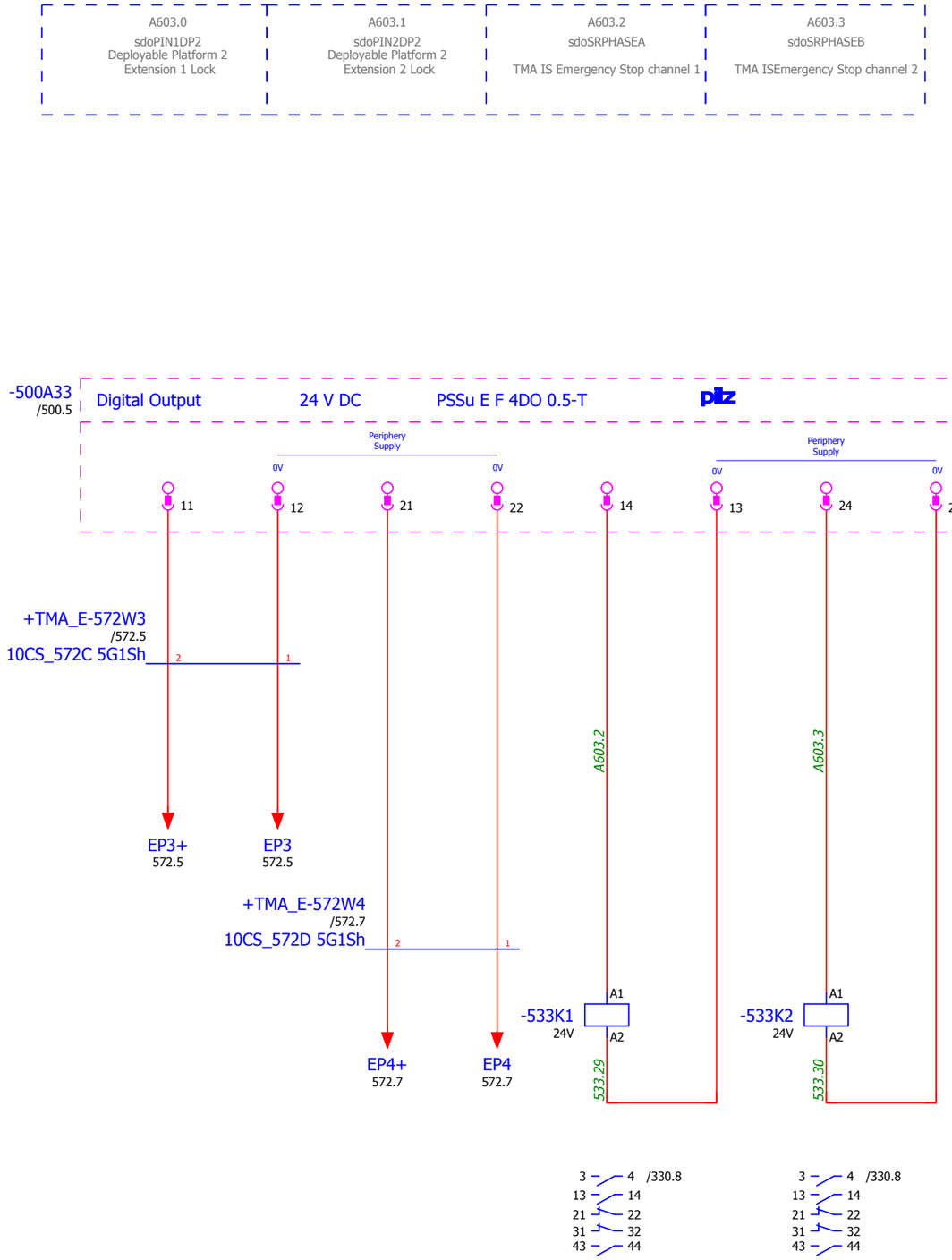

IK4 TEKNIKER Research Alliance
IK4-TEKNIKER
AVDA. OTAOLA 20
20600 Eibar (Gipuzkoa) Spain
Tfno.:(+34) 943 206744
Fax: (+34) 943 202757
Web: www.tekniker.es

Date	14/12/2017						
Reviewed	F.LÓPEZ	2.3	15/12/2017	JOSE MANUEL			
Drew by	JOSE MANUEL	Review	Date	Name	Review	Date	Name

3151_LSST

MCS Design Electrical Schematics

LSST TELESCOPE

Replaces | Replaced by

SAFETY DIGITAL OUTPUTS

Customer: EMPRESARIOS AGRUPADOS
C/Magallanes, 3
28015 MADRID
91 3098000
http://www.empresariosagrupados.es/

= E1
+ TMA-AZ-CS-CBT-0101

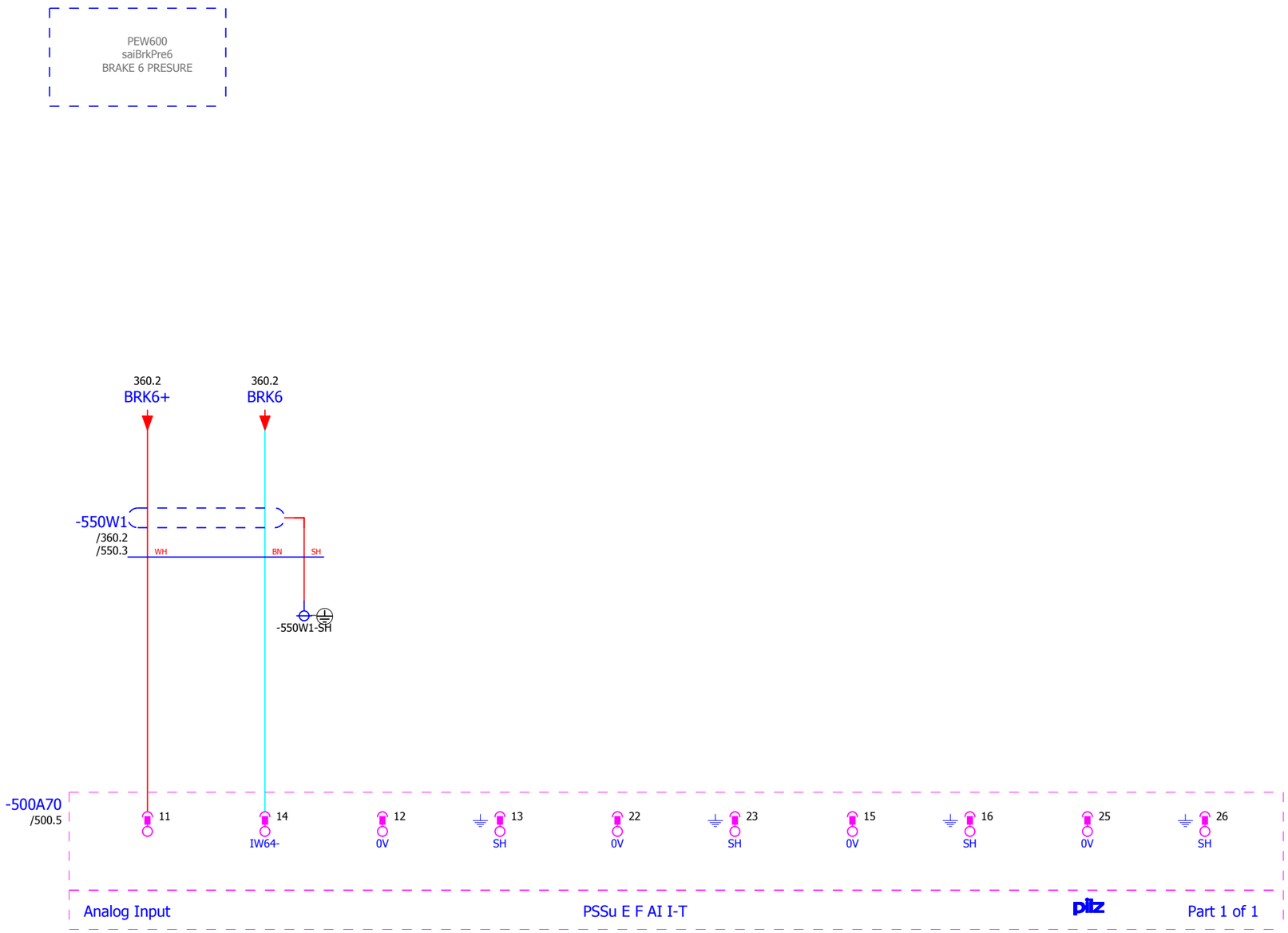

v2.1 señales frenos

IK4 TEKNIKER Research Alliance

IK4-TEKNIKER
AVDA. OTAOLA 20
20600 Eibar (Gipuzkoa) Spain
Tfno.:(+34) 943 206744
Fax: (+34) 943 202757
Web: www.tekniker.es

Date	15/12/2017						
Reviewed	F.LÓPEZ	2.3	15/12/2017	JOSE MANUEL			
Drew by	JOSE MANUEL	Review	Date	Name	Review	Date	Name

3151_LSST

MCS Design Electrical Schematics

LSST TELESCOPE

Replaces | Replaced by

SAFETY ANALOG INPUT

Customer:
EMPRESARIOS AGRUPADOS
C/Magallanes, 3
28015 MADRID
91 3098000
http://www.empresariosagrupados.es/

= E1

+ TMA-AZ-CS-CBT-0101

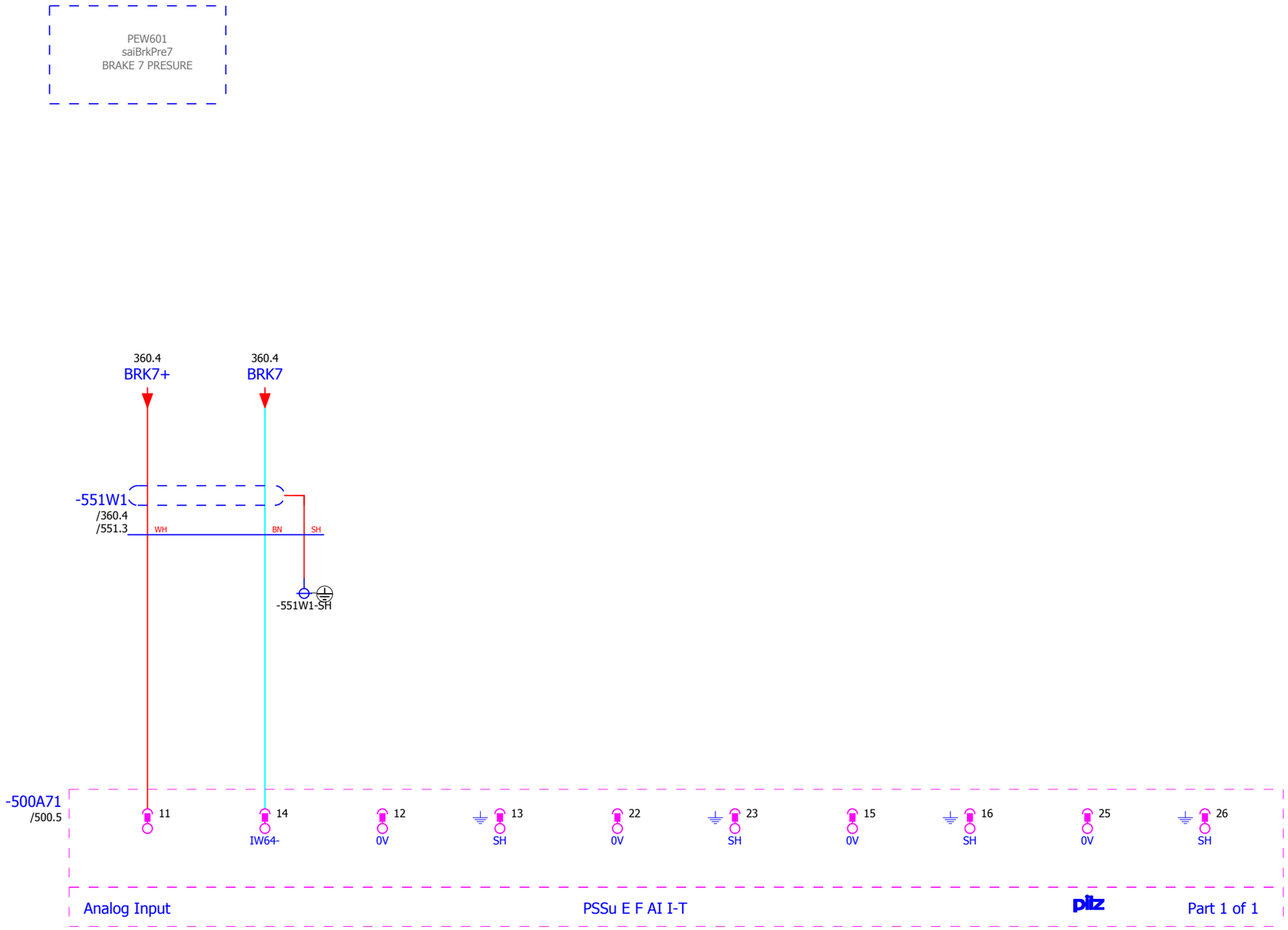

v2.1 señales frenos

IK4 TEKNIKER Research Alliance
IK4-TEKNIKER
AVDA. OTAOLA 20
20600 Eibar (Gipuzkoa) Spain
Tfno.:(+34) 943 206744
Fax: (+34) 943 202757
Web: www.tekniker.es

Date	15/12/2017						
Reviewed	F.LÓPEZ	2.3	15/12/2017	JOSE MANUEL			
Drew by	JOSE MANUEL	Review	Date	Name	Review	Date	Name

3151_LSST
MCS Design Electrical Schematics
LSST TELESCOPE
Replaces
Replaced by

SAFETY ANALOG INPUT

Customer:
EMPRESARIOS AGRUPADOS
C/Magallanes, 3
28015 MADRID
91 3098000
http://www.empresariosagrupados.es/

= E1
+ TMA-AZ-CS-CBT-0101

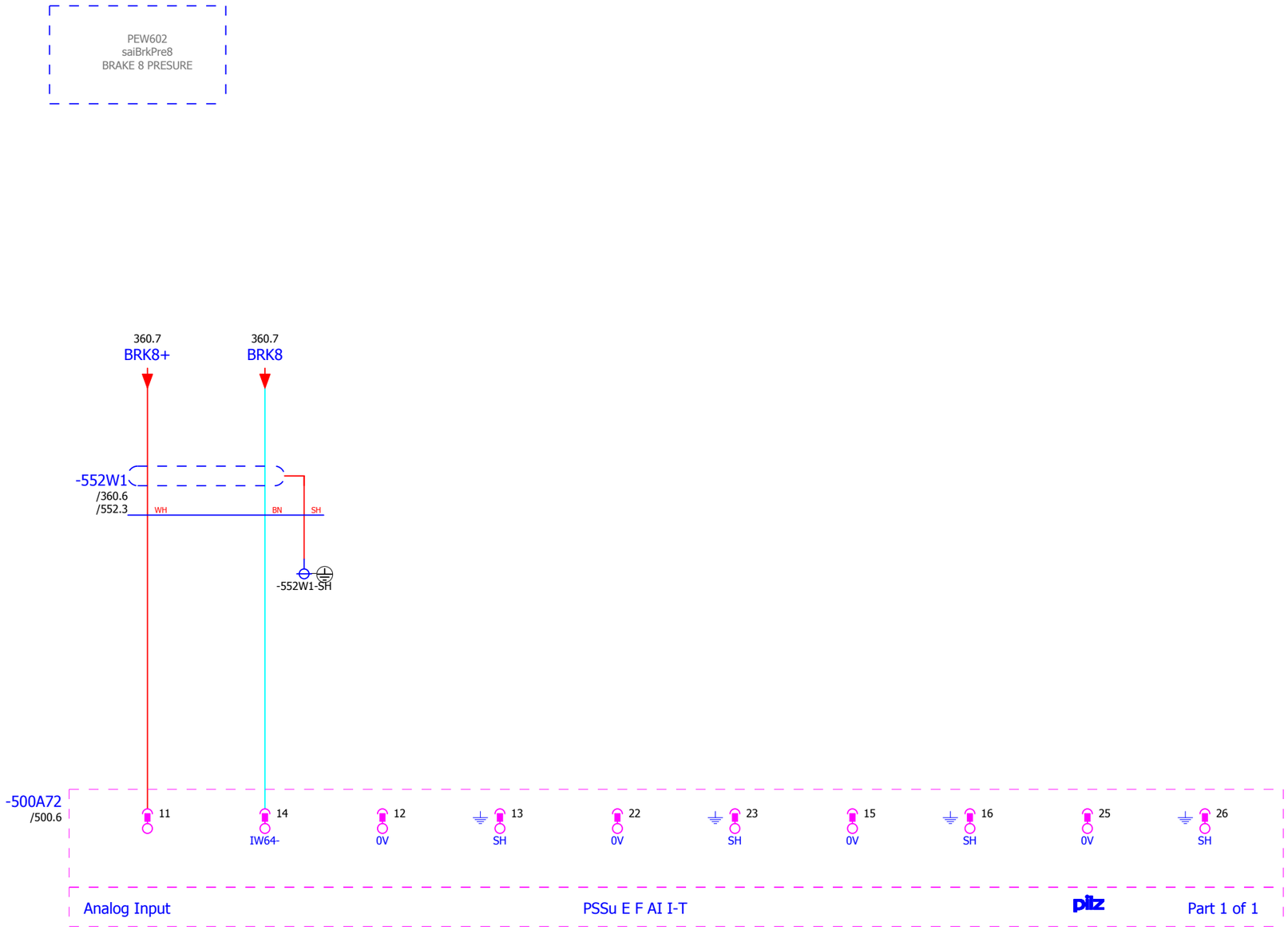

v2.1 señales frenos

IK4 TEKNIKER Research Alliance
IK4-TEKNIKER
AVDA. OTAOLA 20
20600 Eibar (Gipuzkoa) Spain
Tfno.:(+34) 943 206744
Fax: (+34) 943 202757
Web: www.tekniker.es

Date	15/12/2017						
Reviewed	F.LÓPEZ	2.3	15/12/2017	JOSE MANUEL			
Drew by	JOSE MANUEL	Review	Date	Name	Review	Date	Name

3151_LSST
MCS Design Electrical Schematics
LSST TELESCOPE
Replaces
Replaced by

SAFETY ANALOG INPUT

Customer:
EMPRESARIOS AGRUPADOS
C/Magallanes, 3
28015 MADRID
91 3098000
http://www.empresariosagrupados.es/

= E1
+ TMA-AZ-CS-CBT-0101

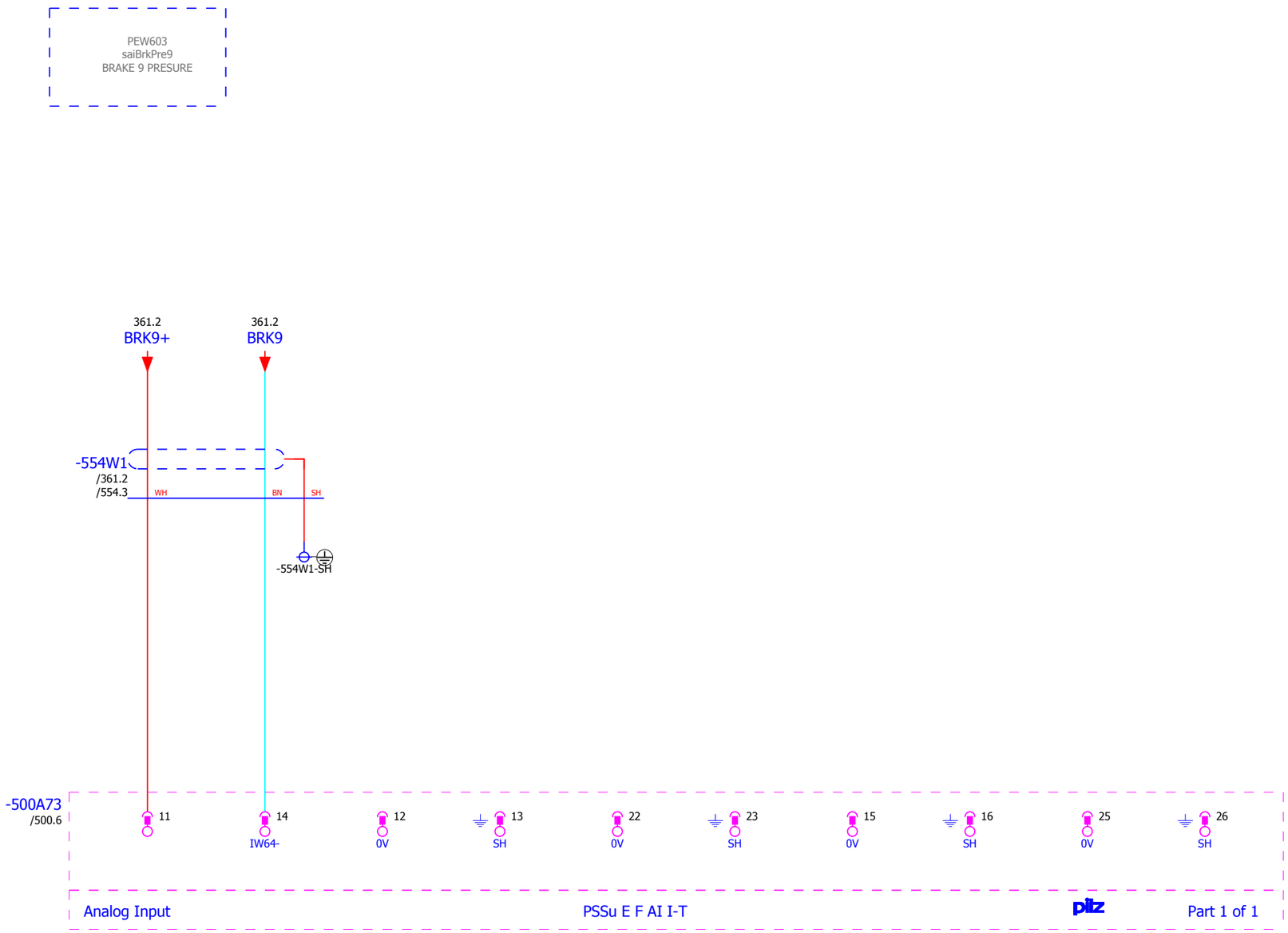

v2.1 señales frenos

IK4 TEKNIKER Research Alliance

IK4-TEKNIKER
AVDA. OTAOLA 20
20600 Eibar (Gipuzkoa) Spain
Tfno.:(+34) 943 206744
Fax: (+34) 943 202757
Web: www.tekniker.es

Date	15/12/2017						
Reviewed	F.LÓPEZ	2.3	15/12/2017	JOSE MANUEL			
Drew by	JOSE MANUEL	Review	Date	Name	Review	Date	Name

3151_LSST

MCS Design Electrical Schematics

LSST TELESCOPE

Replaces | Replaced by

SAFETY ANALOG INPUT

Customer: EMPRESARIOS AGRUPADOS
C/Magallanes, 3
28015 MADRID
91 3098000
http://www.empresariosagrupados.es/

= E1

+ TMA-AZ-CS-CBT-0101

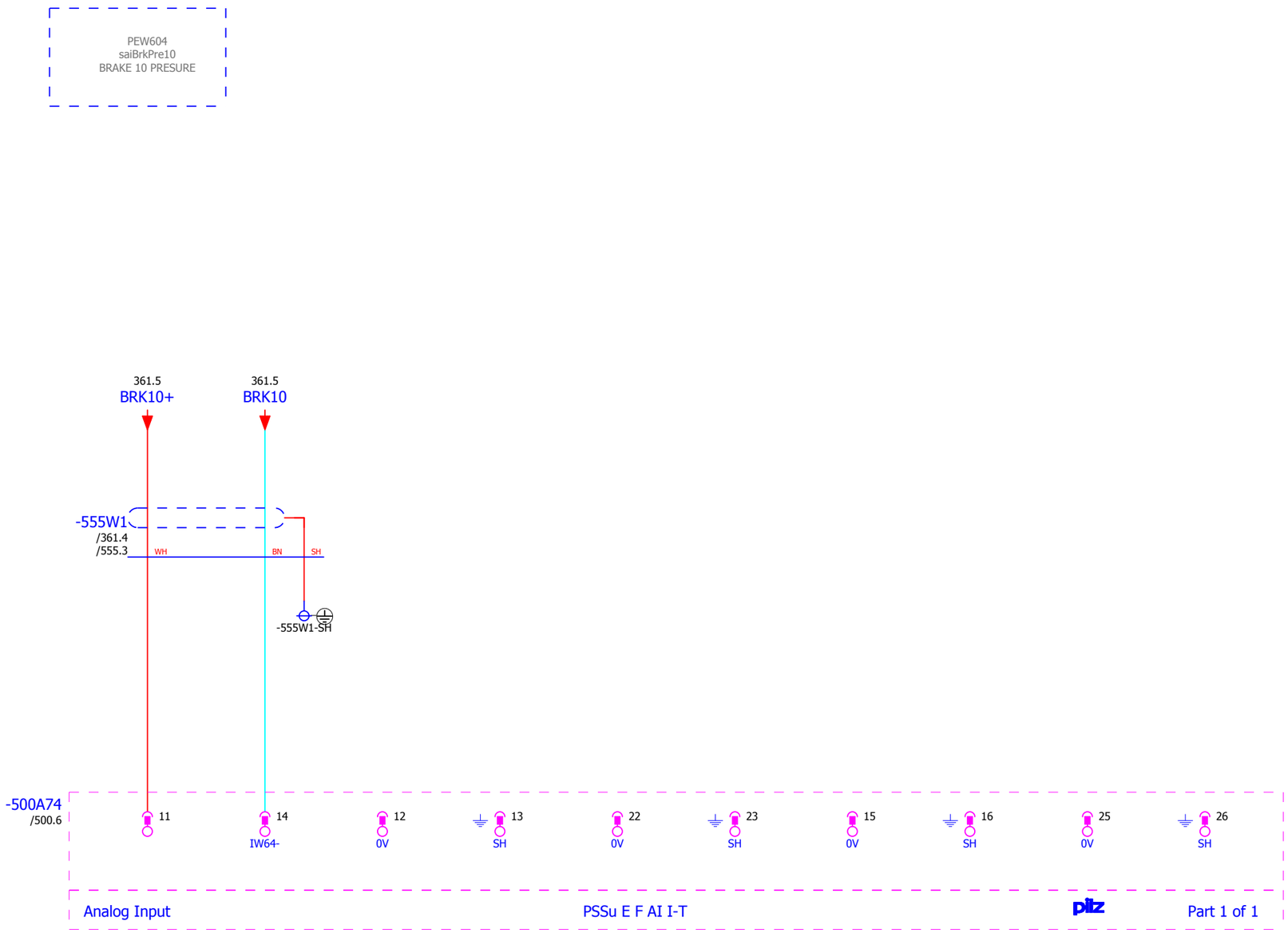

v2.1 señales frenos

IK4 TEKNIKER Research Alliance
IK4-TEKNIKER
AVDA. OTAOLA 20
20600 Eibar (Gipuzkoa) Spain
Tfno.:(+34) 943 206744
Fax: (+34) 943 202757
Web: www.tekniker.es

Date	15/12/2017						
Reviewed	F.LÓPEZ	2.3	15/12/2017	JOSE MANUEL			
Drew by	JOSE MANUEL	Review	Date	Name	Review	Date	Name

3151_LSST
MCS Design Electrical Schematics
LSST TELESCOPE
Replaces
Replaced by

SAFETY ANALOG INPUT

Customer:
EMPRESARIOS AGRUPADOS
C/Magallanes, 3
28015 MADRID
91 3098000
http://www.empresariosagrupados.es/

= E1
+ TMA-AZ-CS-CBT-0101

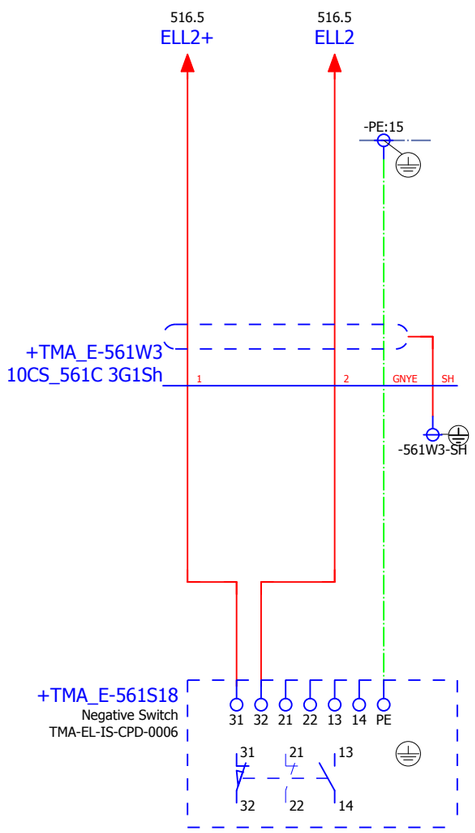

EL Limit switch
POWER OFF (NEGATIVE 0ºC)

IK4 TEKNIKER Research Alliance
IK4-TEKNIKER
AVDA. OTAOLA 20
20600 Eibar (Gipuzkoa) Spain
Tfno.:(+34) 943 206744
Fax: (+34) 943 202757
Web: www.tekniker.es

Date	15/12/2017							
Reviewed	F.LÓPEZ	2.3	15/12/2017	JOSE MANUEL				
Drew by	JOSE MANUEL	Review	Date	Name	Review	Date	Name	

3151_LSST
MCS Design Electrical Schematics
LSST TELESCOPE

Replaces | Replaced by

POWER OFF LIMIT SWITCH

Customer:
EMPRESARIOS AGRUPADOS
C/Magallanes, 3
28015 MADRID
91 3098000
http://www.empresariosagrupados.es/

= E1
+ TMA-AZ-CS-CBT-0101

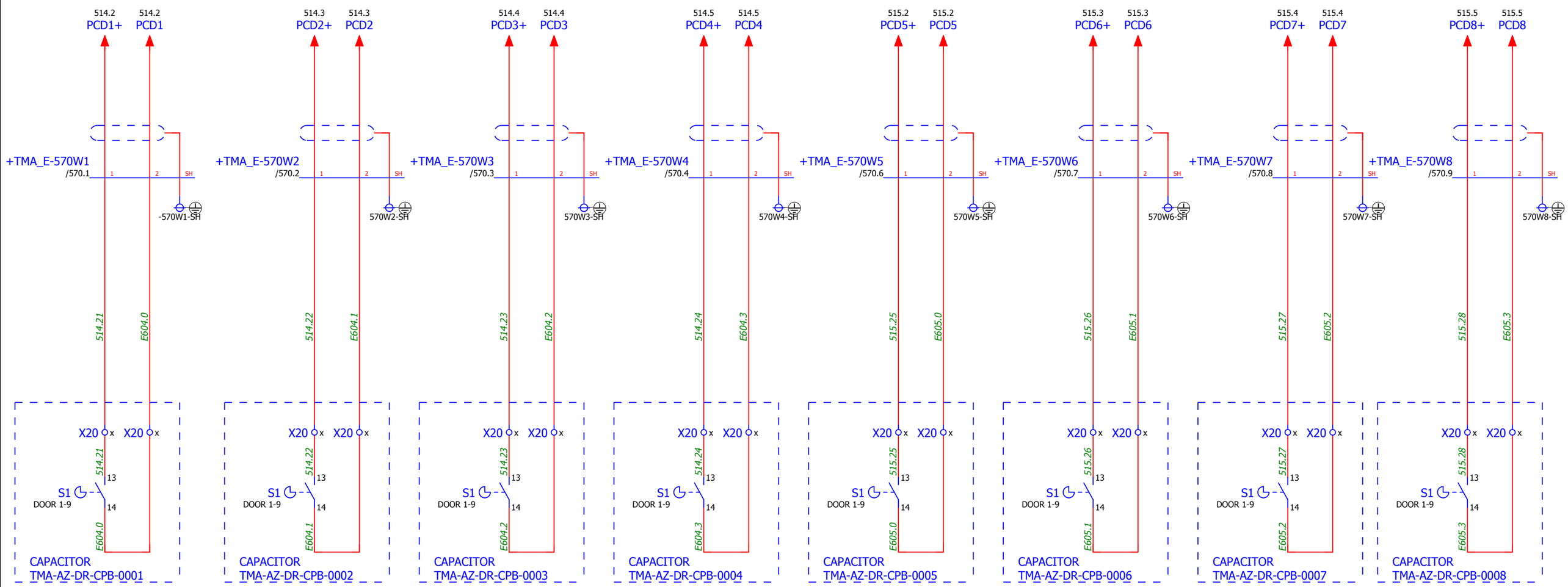

IK4 TEKNIKER Research Alliance

IK4-TEKNIKER
AVDA. OTAOLA 20
20600 Eibar (Gipuzkoa) Spain
Tfno.:(+34) 943 206744
Fax: (+34) 943 202757
Web: www.tekniker.es

Date	15/12/2017						
Reviewed	F.LÓPEZ	2.3	15/12/2017	JOSE MANUEL			
Drew by	JOSE MANUEL	Review	Date	Name	Review	Date	Name

3151_LSST

MCS Design Electrical Schematics

LSST TELESCOPE

Replaces | Replaced by

PHASE CAPACITOR CABINET DOOR SWITCH

Customer: EMPRESARIOS AGRUPADOS

C/Magallanes, 3
28015 MADRID
91 3098000
http://www.empresariosagrupados.es/

= E1

+ TMA-AZ-CS-CBT-0101

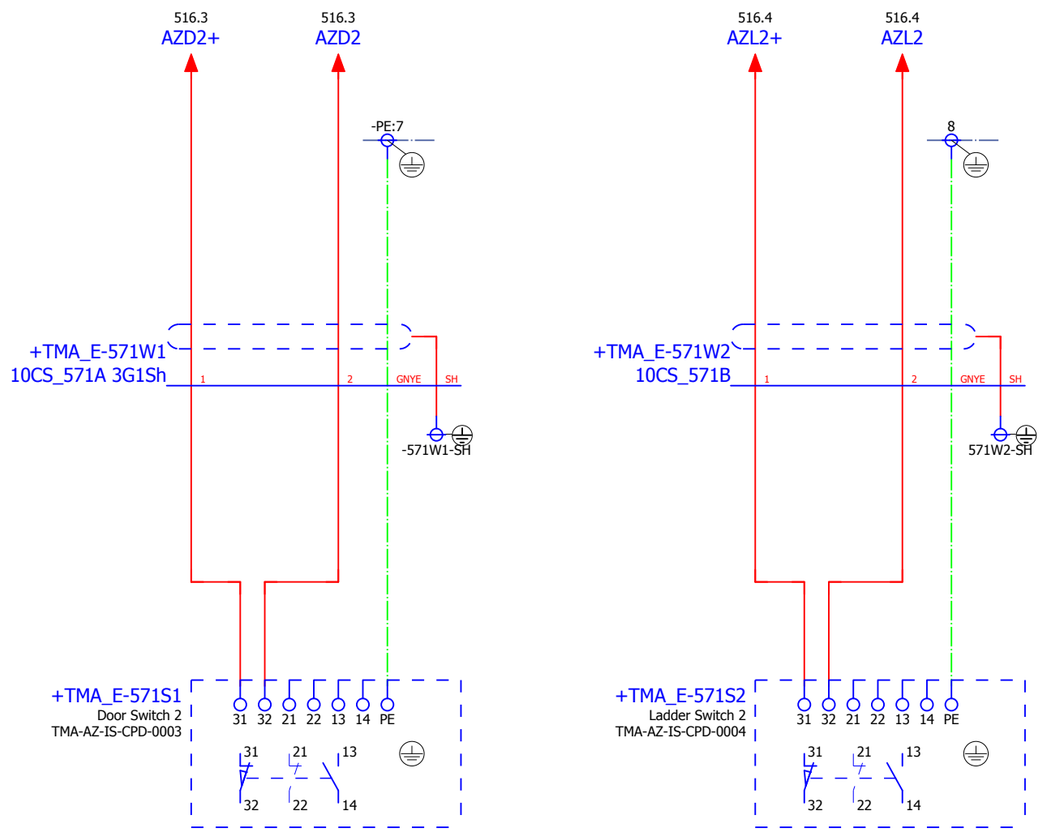

AZ Platform Access 2

ladder parked position 2

IK4 TEKNIKER Research Alliance

IK4-TEKNIKER
AVDA. OTAOLA 20
20600 Eibar (Gipuzkoa) Spain
Tfno.:(+34) 943 206744
Fax: (+34) 943 202757
Web: www.tekniker.es

Date	15/12/2017						
Reviewed	F.LÓPEZ	2.3	15/12/2017	JOSE MANUEL			
Drew by	JOSE MANUEL	Review	Date	Name	Review	Date	Name

3151_LSST

MCS Design Electrical Schematics

LSST TELESCOPE

Replaces | Replaced by

AZIMUTH PLATFORM ACCESS

Customer: EMPRESARIOS AGRUPADOS

C/Magallanes, 3
28015 MADRID
91 3098000

http://www.empresariosagrupados.es/

= E1

+ TMA-AZ-CS-CBT-0101

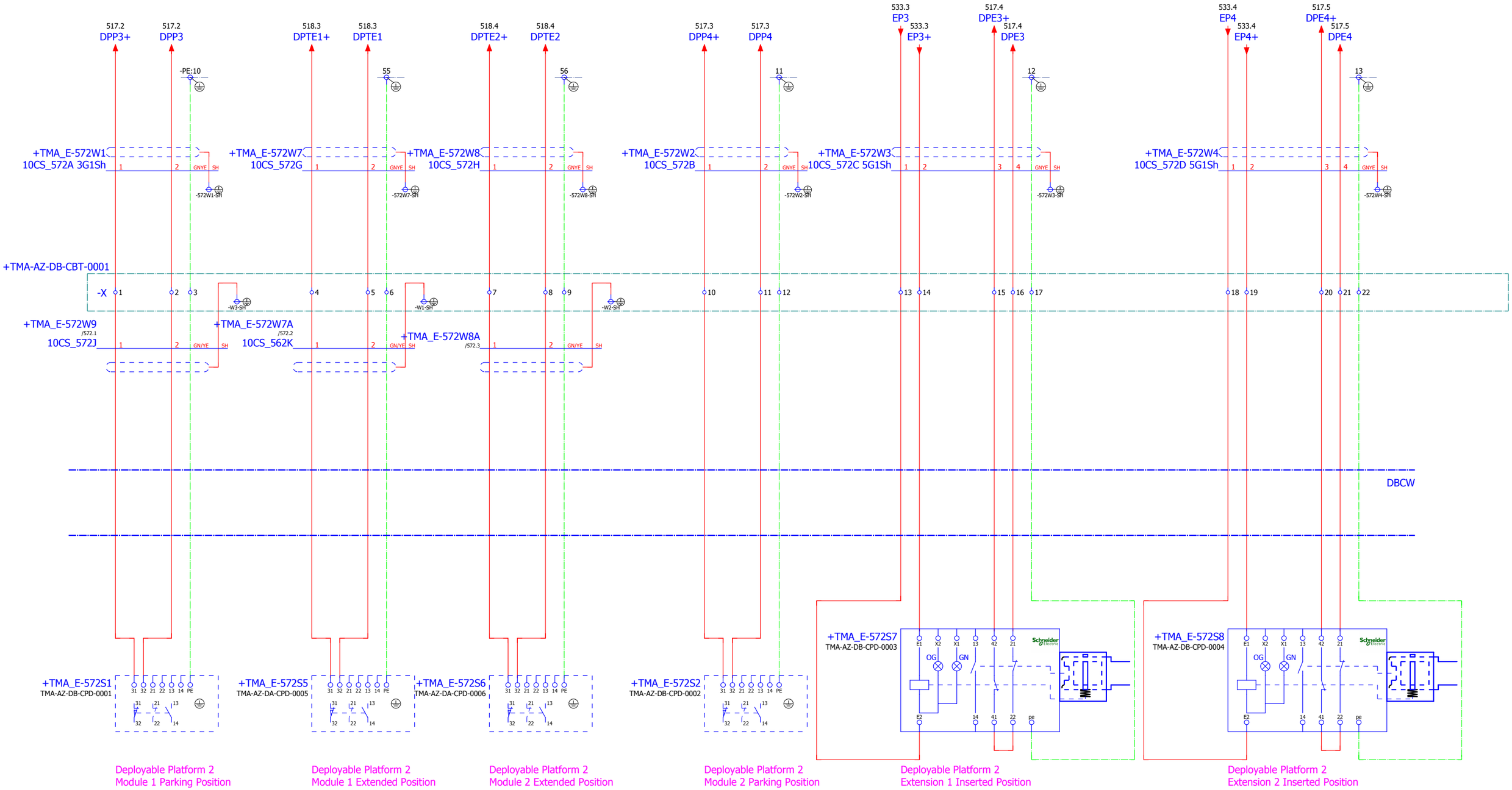

◁ 571

574 ▷

IK4-TEKNIKER
AVDA. OTAOLA 20
20600 Eibar (Gipuzkoa) Spain
Tfno.:(+34) 943 206744
Fax: (+34) 943 202757
Web: www.tekniker.es

Date	15/12/2017						
Reviewed	F.LÓPEZ	2.3	15/12/2017	JOSE MANUEL			
Drew by	JOSE MANUEL	Review	Date	Name	Review	Date	Name

3151_LSST

MCS Design Electrical Schematics

LSST TELESCOPE

Replaces | Replaced by

Deployable Platform Limit Switch

Customer: EMPRESARIOS AGRUPADOS
C/Magallanes, 3
28015 MADRID
91 3098000
http://www.empresariosagrupados.es/

= E1

+ TMA-AZ-CS-CBT-0101

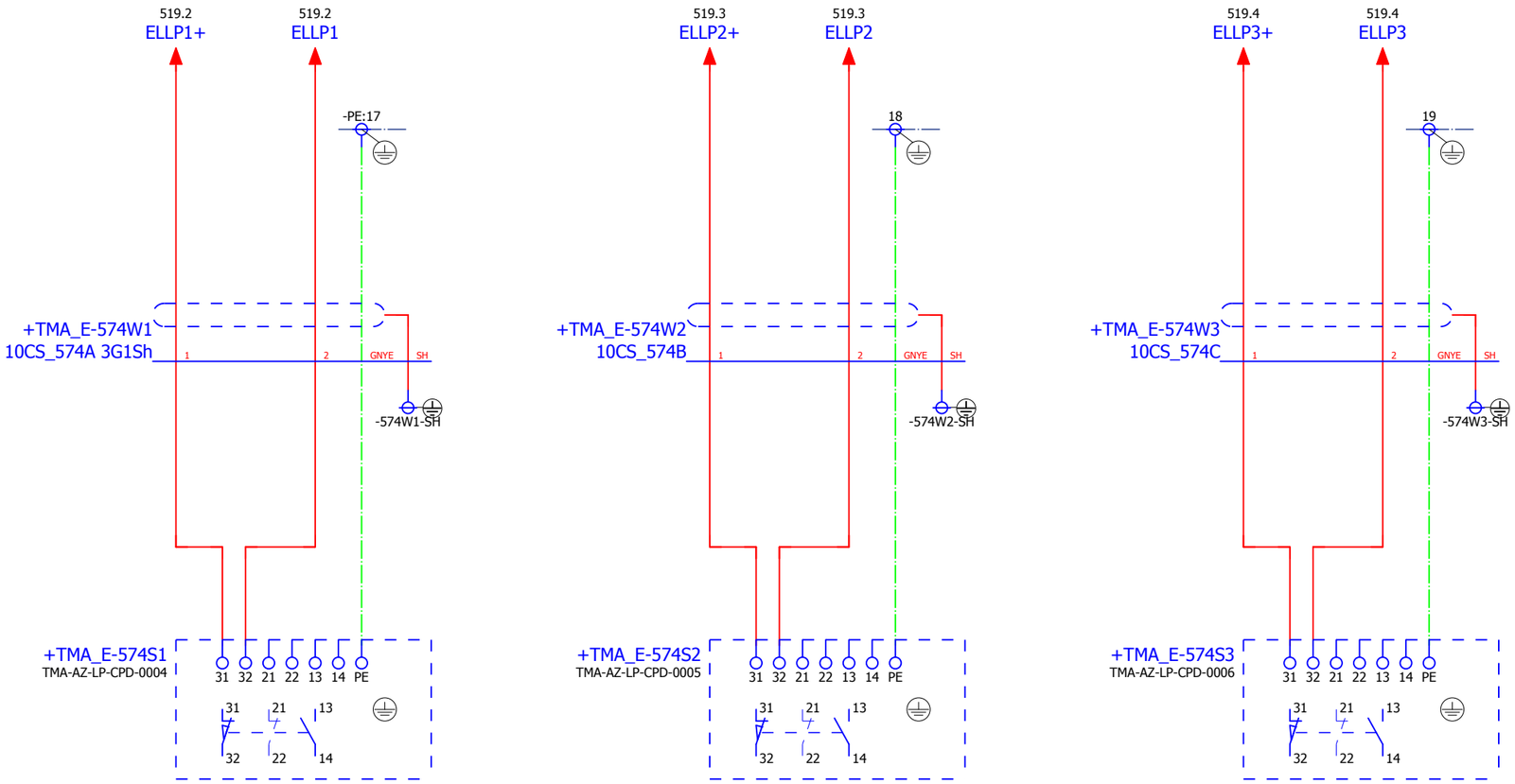

Elevation Locking Pin 2 Inserted

Elevation Locking Pin 2 Test

Elevation Locking Pin 2 retracted

IK4 TEKNIKER Research Alliance
IK4-TEKNIKER
AVDA. OTAOLA 20
20600 Eibar (Gipuzkoa) Spain
Tfno.:(+34) 943 206744
Fax: (+34) 943 202757
Web: www.tekniker.es

Date	15/12/2017							
Reviewed	F.LÓPEZ	2.3	15/12/2017	JOSE MANUEL				
Drew by	JOSE MANUEL	Review	Date	Name	Review	Date	Name	

3151_LSST
MCS Design Electrical Schematics
LSST TELESCOPE

Replaces | Replaced by

Elevation Limit Switch

Customer: EMPRESARIOS AGRUPADOS
C/Magallanes, 3
28015 MADRID
91 3098000
http://www.empresariosagrupados.es/

= E1
+ TMA-AZ-CS-CBT-0101

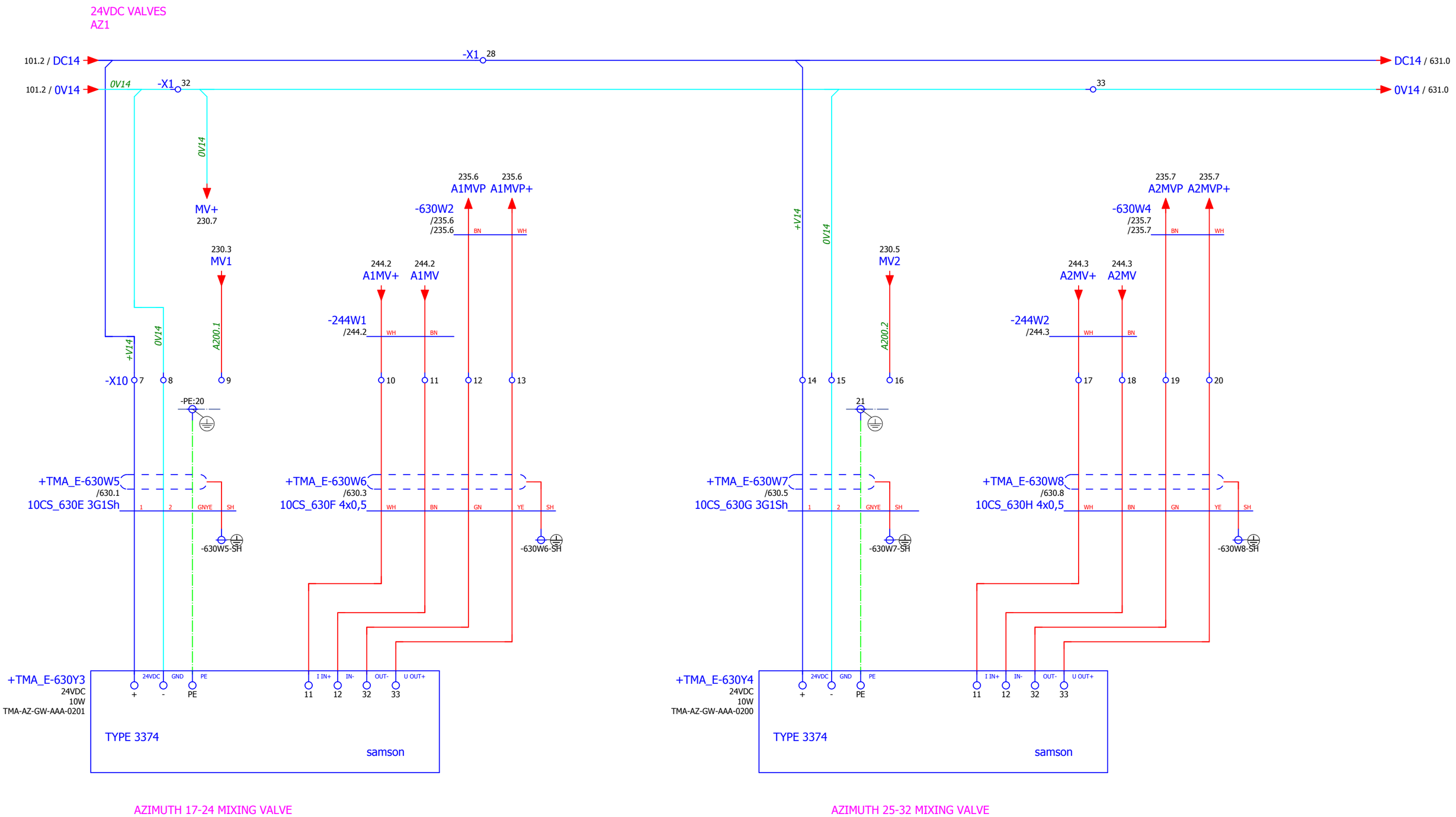

IK4 TEKNIKER Research Alliance

IK4-TEKNIKER
AVDA. OTAOLA 20
20600 Eibar (Gipuzkoa) Spain
Tfno.:(+34) 943 206744
Fax: (+34) 943 202757
Web: www.tekniker.es

Date	15/12/2017						
Reviewed	F.LÓPEZ	2.3	15/12/2017	JOSE MANUEL			
Drew by	JOSE MANUEL	Review	Date	Name	Review	Date	Name

3151_LSST

MCS Design Electrical Schematics

LSST TELESCOPE

Replaces | Replaced by

MIXING VALVES

Customer: EMPRESARIOS AGRUPADOS
C/Magallanes, 3
28015 MADRID
91 3098000
http://www.empresariosagrupados.es/

= E1
+ TMA-AZ-CS-CBT-0101

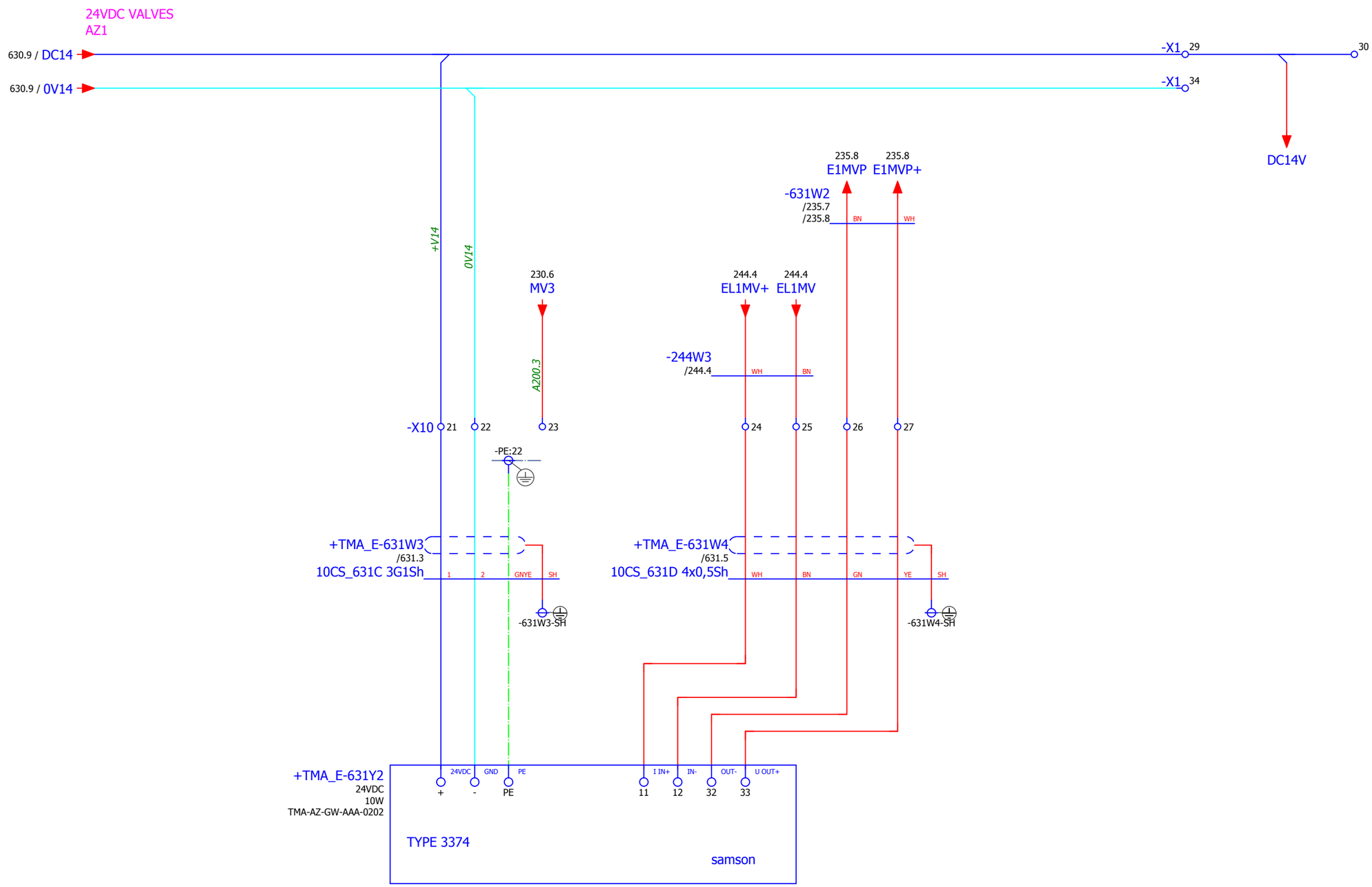

ELEVATION 7-12 MIXING VALVE

IK4 TEKNIKER Research Alliance

IK4-TEKNIKER
AVDA. OTAOLA 20
20600 Eibar (Gipuzkoa) Spain
Tfno.:(+34) 943 206744
Fax: (+34) 943 202757
Web: www.tekniker.es

Date	15/12/2017							
Reviewed	F.LÓPEZ	2.3	15/12/2017	JOSE MANUEL				
Drew by	JOSE MANUEL	Review	Date	Name	Review	Date	Name	

3151_LSST

MCS Design Electrical Schematics

LSST TELESCOPE

Replaces

Replaced by

MIXING VALVES

Customer:

EMPRESARIOS AGRUPADOS
C/Magallanes, 3
28015 MADRID
91 3098000

http://www.empresariosagrupados.es/

= E1

+ TMA-AZ-CS-CBT-0101

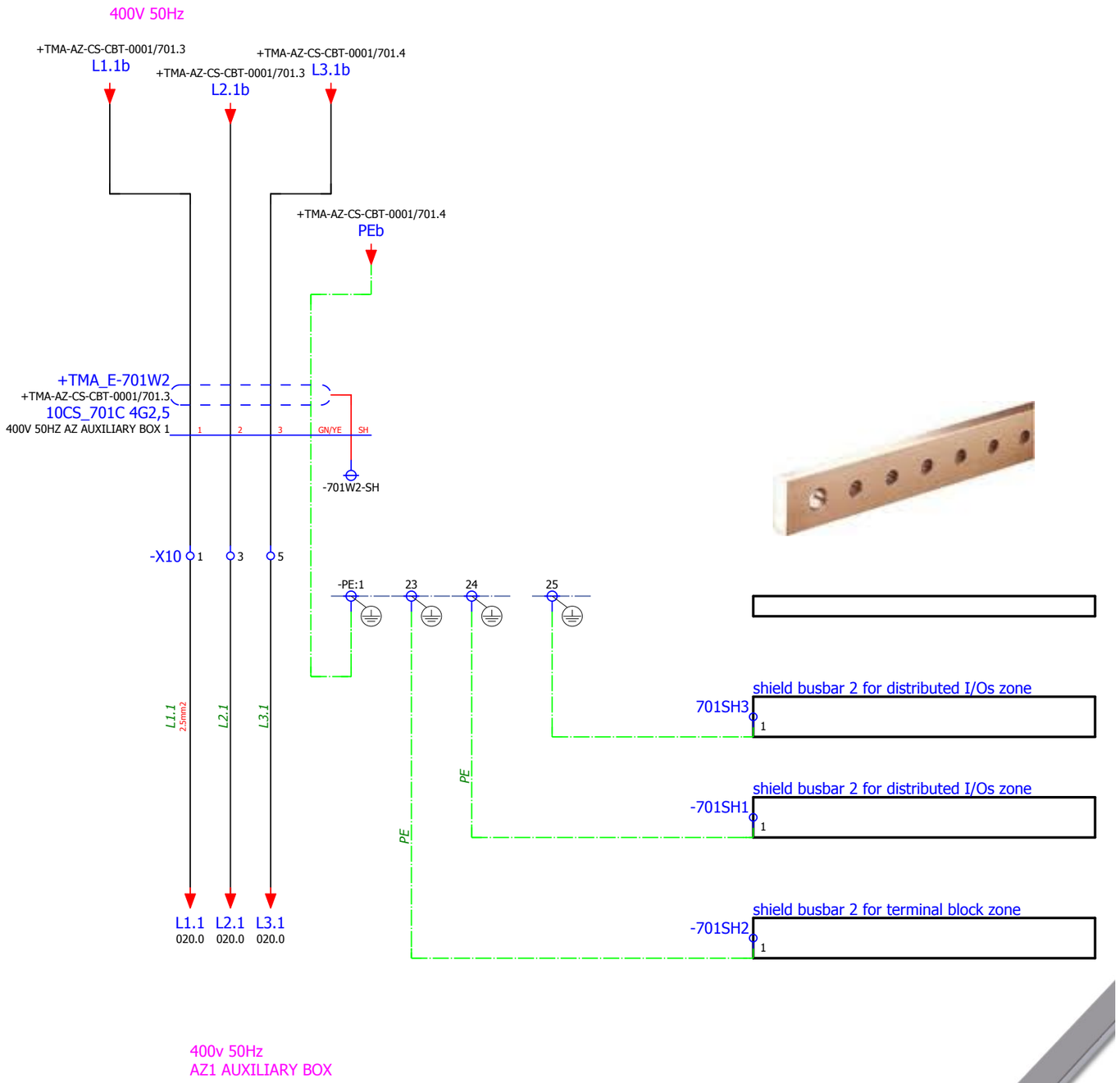

IK4 TEKNIKER
Research Alliance

IK4-TEKNIKER
AVDA. OTAOLA 20
20600 Eibar (Gipuzkoa) Spain
Tfno.:(+34) 943 206744
Fax: (+34) 943 202757
Web: www.tekniker.es

Date	15/12/2017						
Reviewed	F.LÓPEZ	2.3	15/12/2017	JOSE MANUEL			
Drew by	JOSE MANUEL	Review	Date	Name	Review	Date	Name

3151_LSST

MCS Design Electrical Schematics

LSST TELESCOPE

Replaces | Replaced by

POWER SUPPLY FROM MAIN CONTROL CABINET

Customer:

EMPRESARIOS AGRUPADOS
C/Magallanes, 3
28015 MADRID
91 3098000
http://www.empresariosagrupados.es/

= E1

+ TMA-AZ-CS-CBT-0101

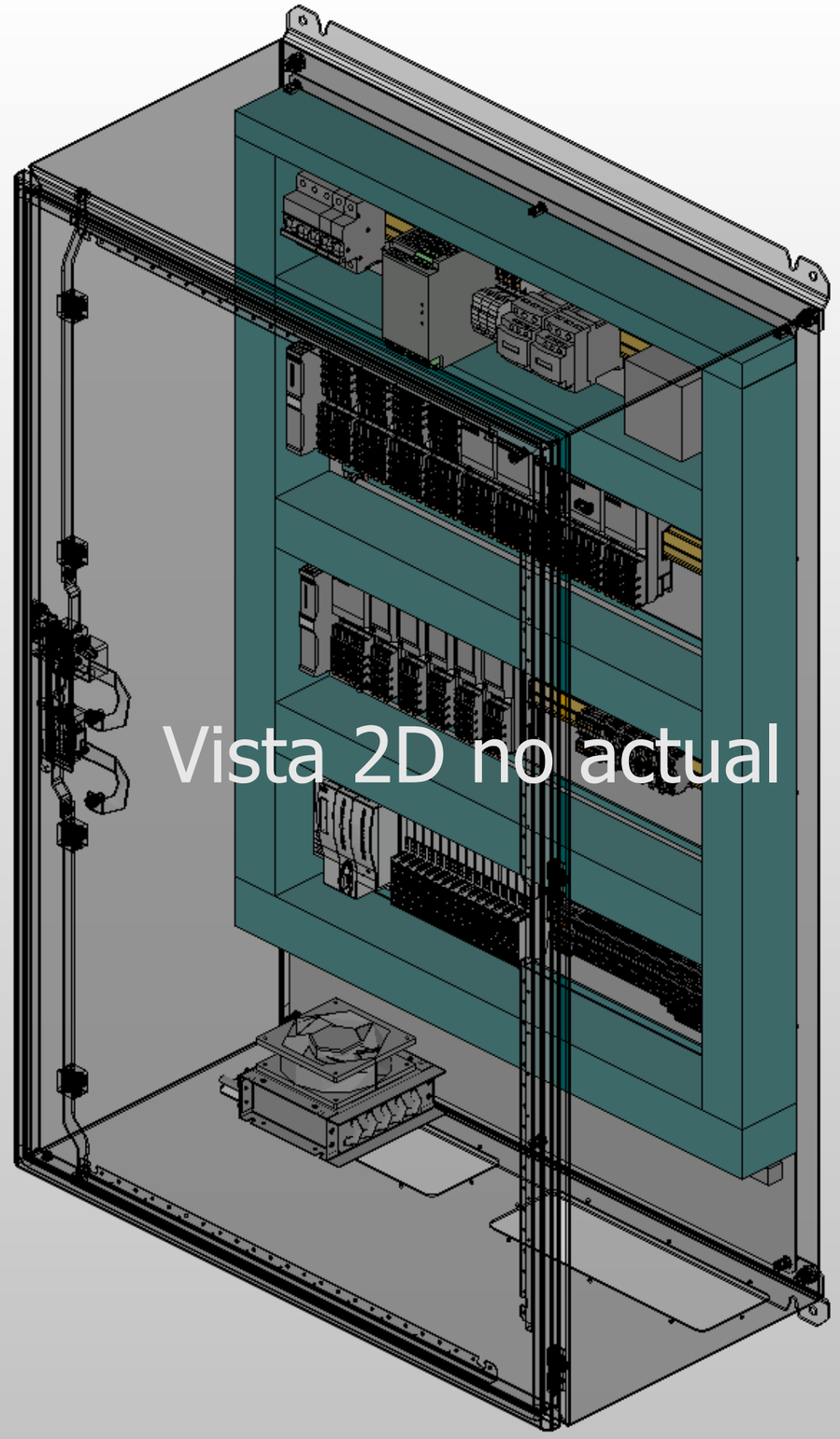

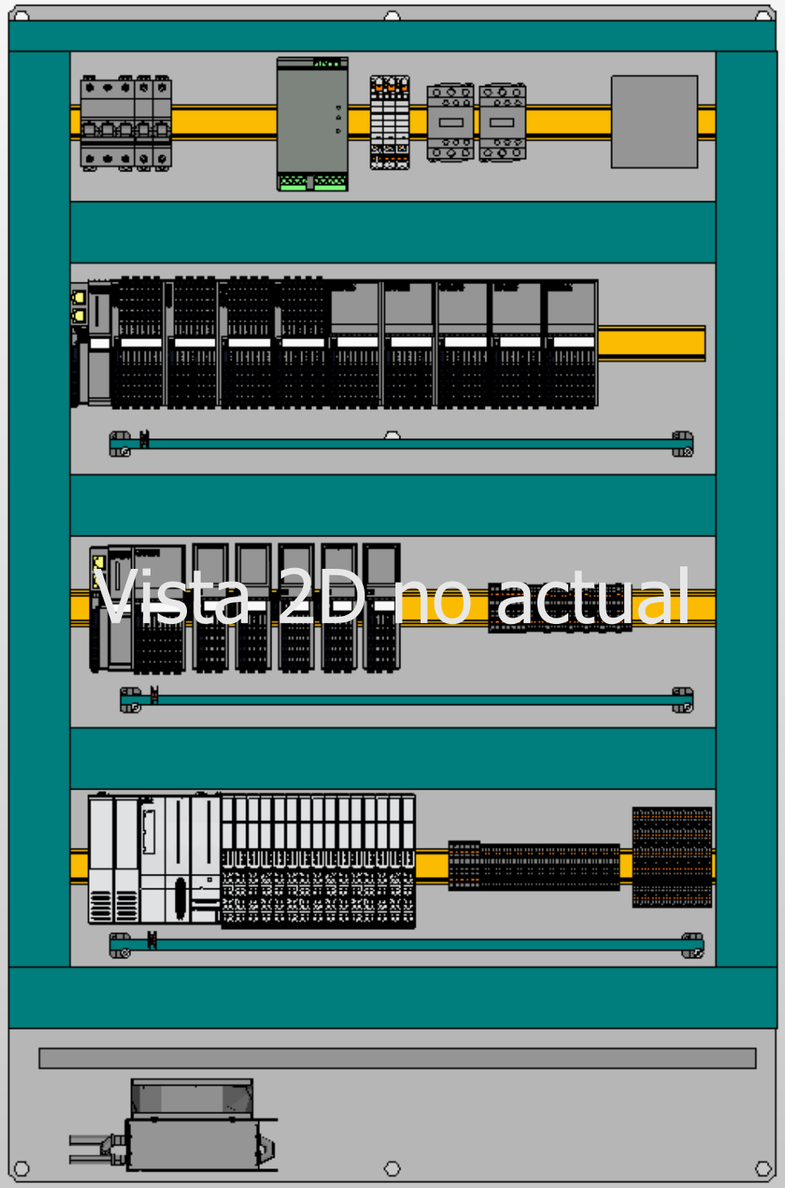

IK4 TEKNIKER Research Alliance

IK4-TEKNIKER
AVDA. OTAOLA 20
20600 Eibar (Gipuzkoa) Spain
Tfno.:(+34) 943 206744
Fax: (+34) 943 202757
Web: www.tekniker.es

Date	20/01/2017						
Reviewed	F.LÓPEZ	2.3	15/12/2017	JOSE MANUEL			
Drew by	jcastano	Review	Date	Name	Review	Date	Name

3151_LSST

MCS Design Electrical Schematics

LSST TELESCOPE

Replaces | Replaced by

BOX VIEW

Customer: EMPRESARIOS AGRUPADOS
C/Magallanes, 3
28015 MADRID
91 3098000
http://www.empresariosagrupados.es/

= E1

+ TMA-AZ-CS-CBT-0101

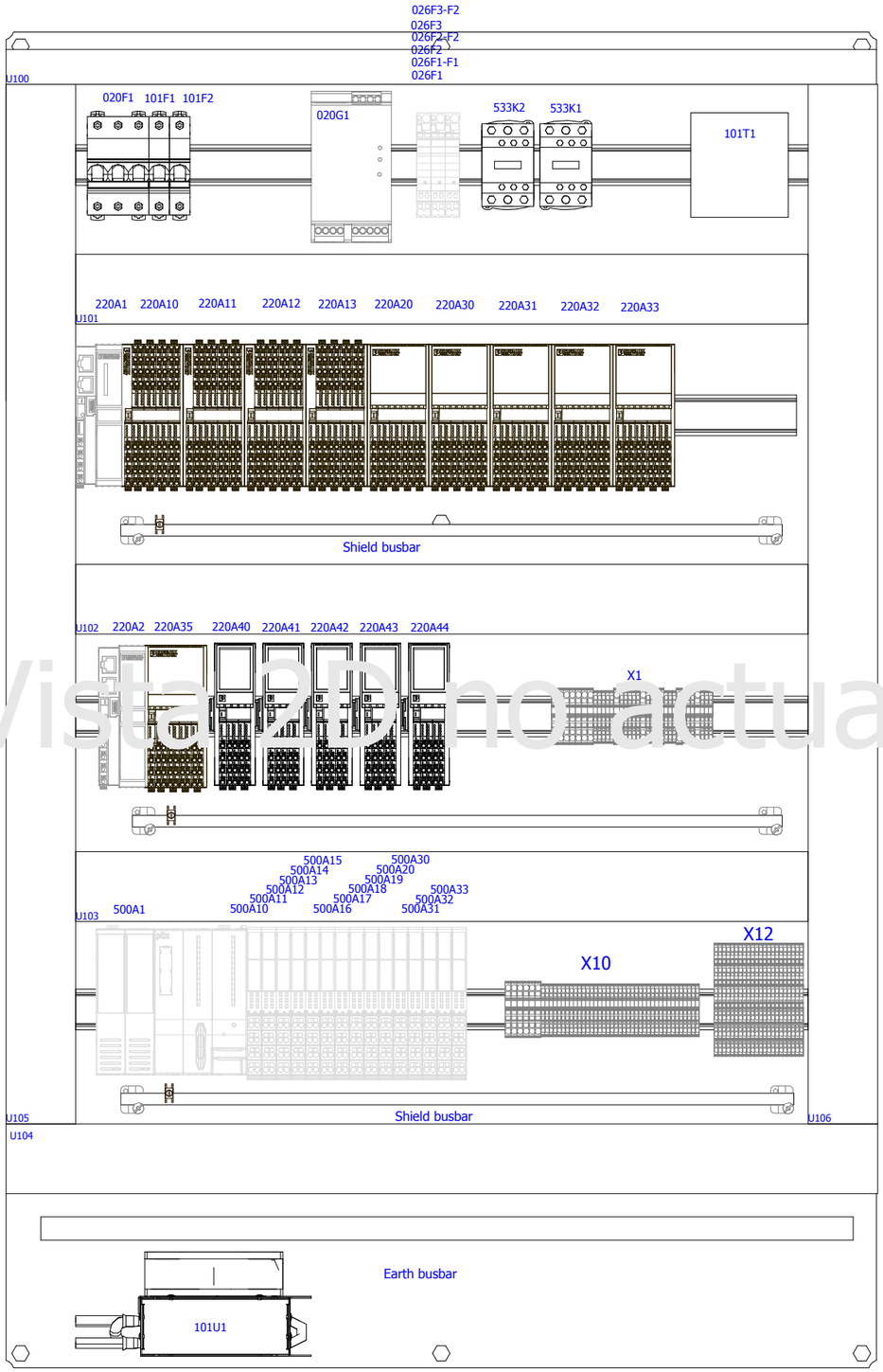

Vista 2D no actual

IK4 TEKNIKER Research Alliance
IK4-TEKNIKER
AVDA. OTAOLA 20
20600 Eibar (Gipuzkoa) Spain
Tfno.:(+34) 943 206744
Fax: (+34) 943 202757
Web: www.tekniker.es

Date	20/01/2017							
Reviewed	F.LÓPEZ	2.3	15/12/2017	JOSE MANUEL				
Drew by	jcastano	Review	Date	Name	Review	Date	Name	

3151_LSST
MCS Design Electrical Schematics
LSST TELESCOPE

Replaces | Replaced by

Mounting Plate

Customer: EMPRESARIOS AGRUPADOS
C/Magallanes, 3
28015 MADRID
91 3098000
http://www.empresariosagrupados.es/

= E1
+ TMA-AZ-CS-CBT-0101

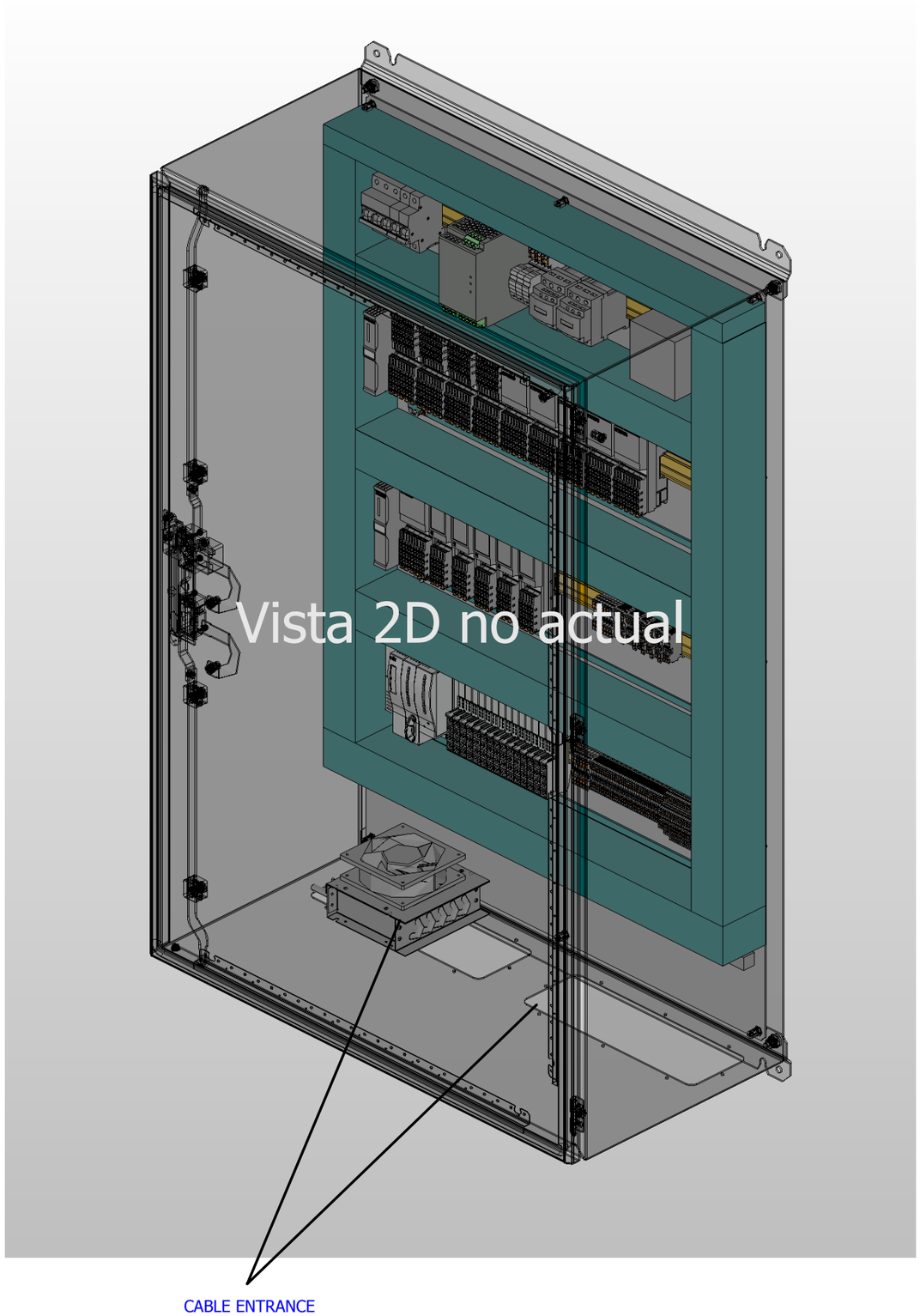

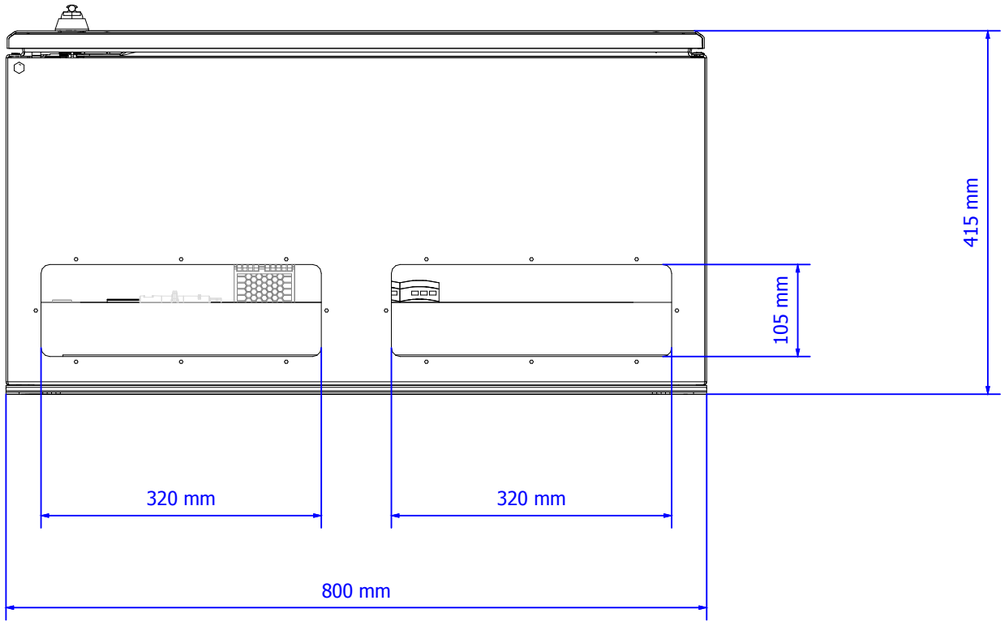

IK4 TEKNIKER Research Alliance
IK4-TEKNIKER
AVDA. OTAOLA 20
20600 Eibar (Gipuzkoa) Spain
Tfno.:(+34) 943 206744
Fax: (+34) 943 202757
Web: www.tekniker.es

Date	20/01/2017							
Reviewed	F.LÓPEZ	2.3	15/12/2017	JOSE MANUEL				
Drew by	jcastano	Review	Date	Name	Review	Date	Name	

3151_LSST
MCS Design Electrical Schematics
LSST TELESCOPE

Replaces | Replaced by

CABLE ENTRANCE DIMENSIONS

Customer: EMPRESARIOS AGRUPADOS
C/Magallanes, 3
28015 MADRID
91 3098000
http://www.empresariosagrupados.es/

= E1
+ TMA-AZ-CS-CBT-0101

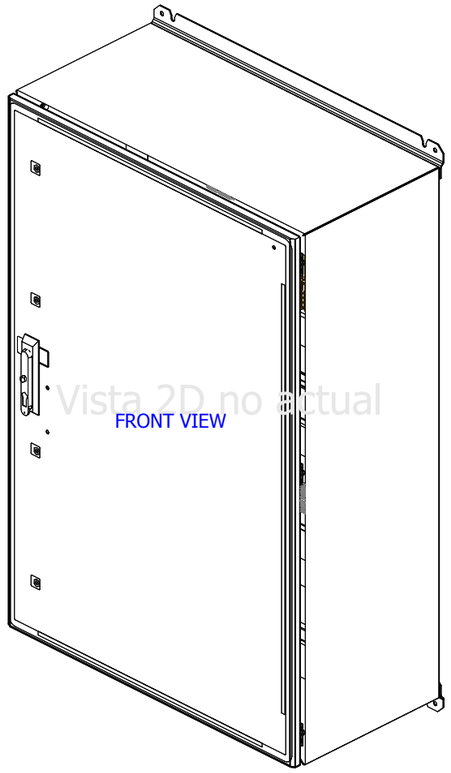

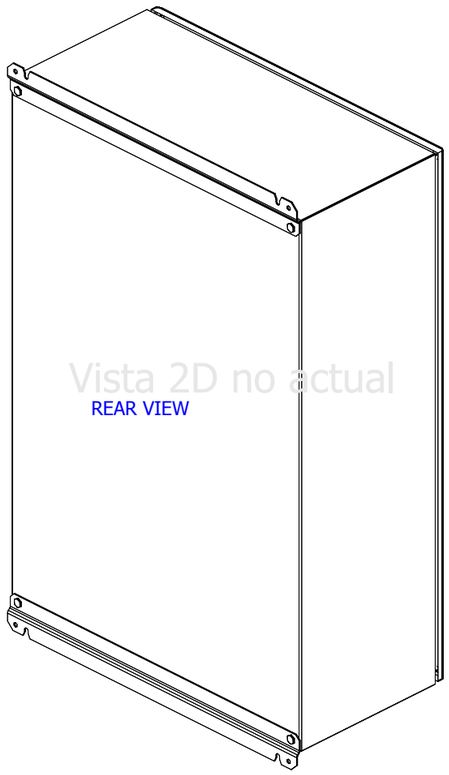

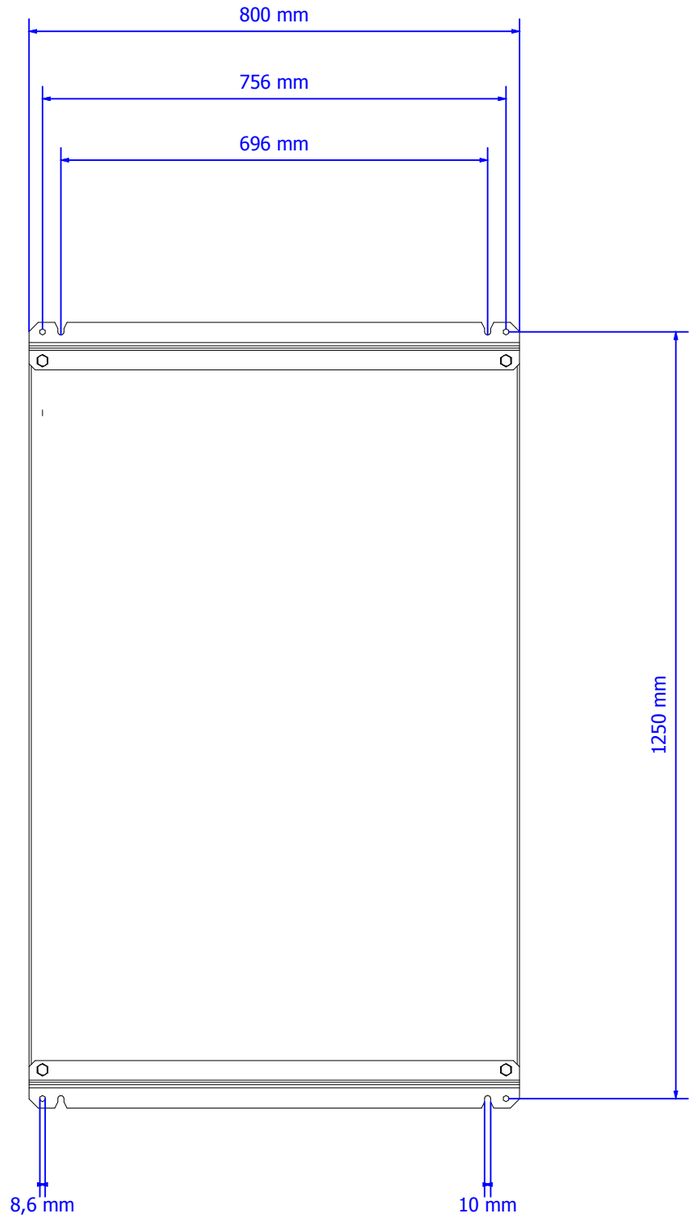

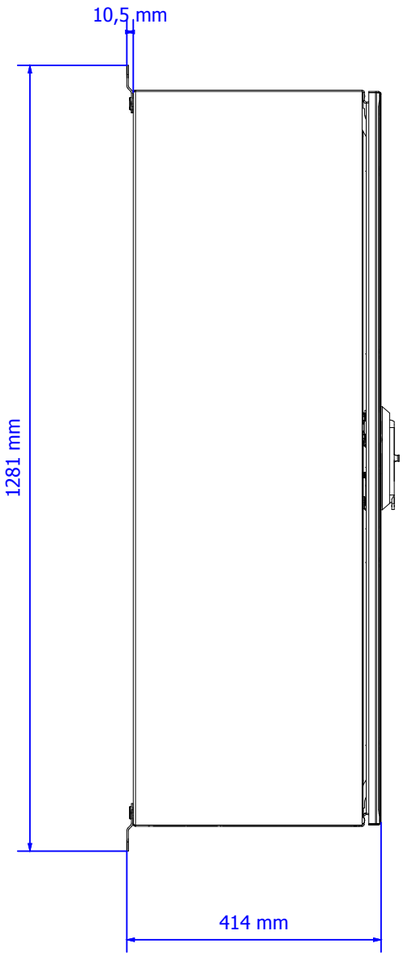

◁ 803

+TMA-EL-CS-CBT-0101/001 ▷

IK4-TEKNIKER
AVDA. OTAOLA 20
20600 Eibar (Gipuzkoa) Spain
Tfno.:(+34) 943 206744
Fax: (+34) 943 202757
Web: www.tekniker.es

Date	20/01/2017								
Reviewed	F.LÓPEZ	2.3	15/12/2017	JOSE MANUEL					
Drew by	jcastano	Review	Date	Name	Review	Date	Name	Replaces	Replaced by

3151_LSST

MCS Design Electrical Schematics

LSST TELESCOPE

CABINET DIMENSIONS

Customer: EMPRESARIOS AGRUPADOS
C/Magallanes, 3
28015 MADRID
91 3098000
http://www.empresariosagrupados.es/

= E1

+ TMA-AZ-CS-CBT-0101

Customer

EMPRESARIOS AGRUPADOS

EMPRESARIOS AGRUPADOS

C/Magallanes, 3
28015 MADRID
ESPAÑA
91 3098000

http://www.empresariosagrupados.es/

Project:

3151_LSST

MCS Design Electrical Schematics

LSST TELESCOPE

E1
TMA

TMA-EL-CS-CBT-0101
AUXILIARY ELEVATION 1 BOX (+X)

Number of pages: 710

Made by:

IK4-TEKNIKER
AVDA. OTAOLA 20
20600 Eibar (Gipuzkoa) Spain
Tfno. : (+34) 943 206744
Fax : (+34) 943 202757
Web: www.tekniker.es

2.3	VERSION INTERMEDIA PARA MONTAJE ASTURFEITO (SIN EVALUACIONES)	15/12/2017	JOSE MANUEL
Review	Review description	Date	Reviewed

Drew by:	J.M.CASTAÑO
Reviewed:	F.LÓPEZ
Date:	16/12/2015
Replaces:	
Replaced by:	

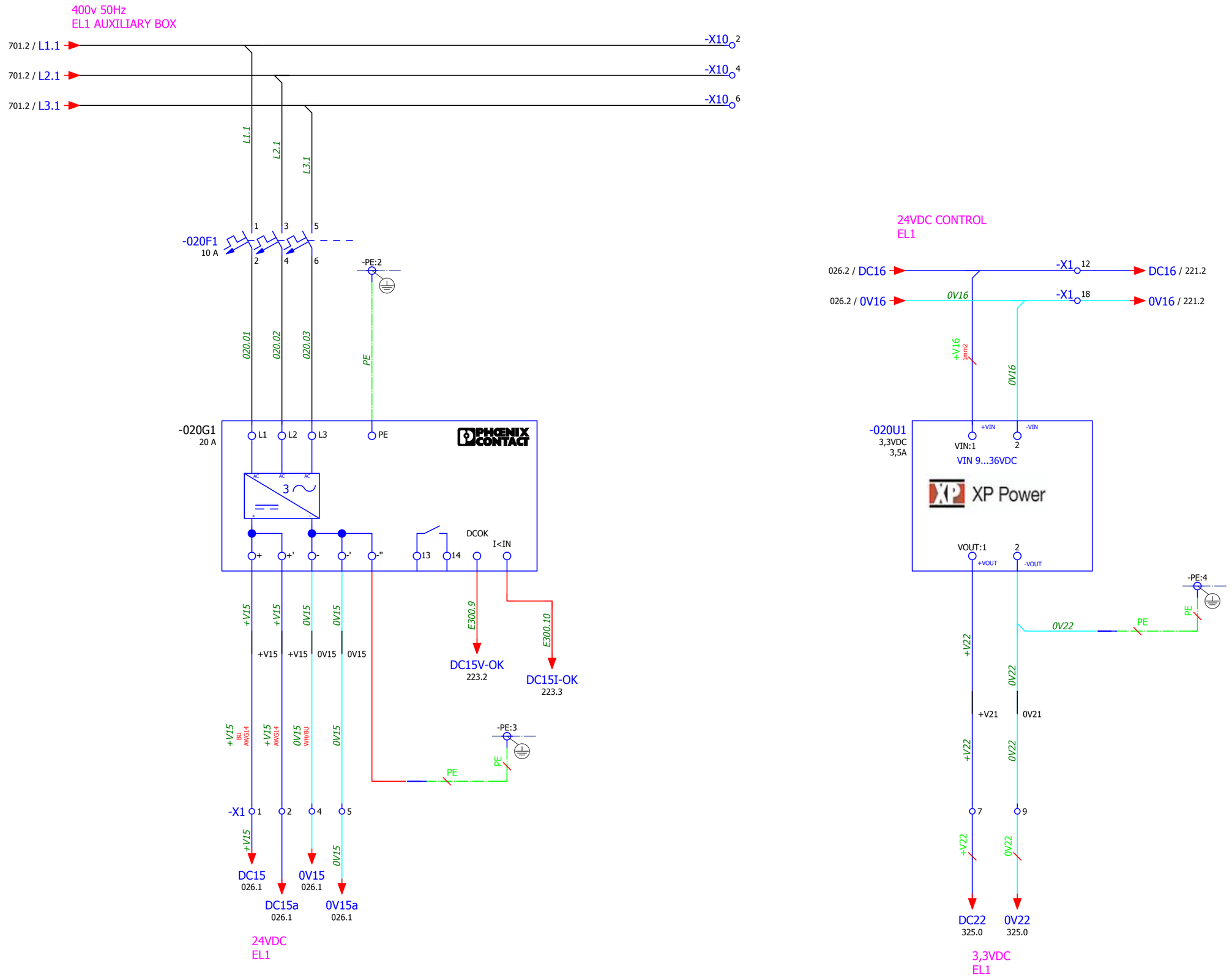

◁ 001

026 ▷

IK4 TEKNIKER Research Alliance	IK4-TEKNIKER AVDA. OTAOLA 20 20600 Eibar (Gipuzkoa) Spain Tfno.:(+34) 943 206744 Fax: (+34) 943 202757 Web: www.tekniker.es								3151_LSST	MCS Design Electrical Schematics LSST TELESCOPE	DC POWER	Customer: EMPRESARIOS AGRUPADOS C/Magallanes, 3 28015 MADRID 91 3098000 http://www.empresariosagrupados.es/	= E1 + TMA-EL-CS-CBT-0101
		Date	15/12/2017										
		Reviewed	F.LÓPEZ	2.3	15/12/2017	JOSE MANUEL							Page 020 Total number 710
		Drew by	JOSE MANUEL	Review	Date	Name	Review	Date	Name	Replaces	Replaced by		

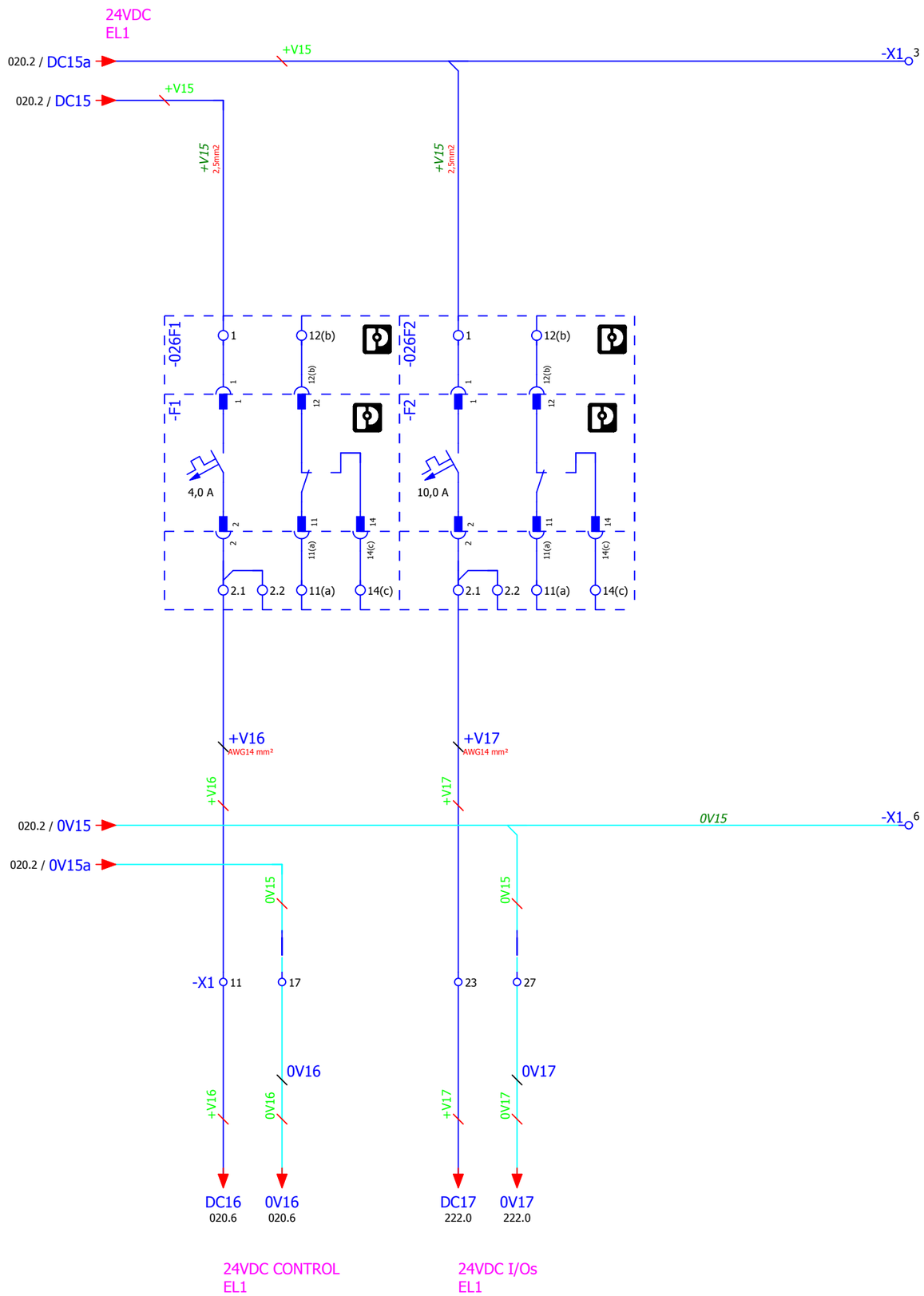

◁ 020

220 ▷

IK4-TEKNIKER
AVDA. OTAOLA 20
20600 Eibar (Gipuzkoa) Spain
Tfno.:(+34) 943 206744
Fax: (+34) 943 202757
Web: www.tekniker.es

Date	23/02/2017						
Reviewed	F.LÓPEZ	2.3	15/12/2017	JOSE MANUEL			
Drew by	jcastano	Review	Date	Name	Review	Date	Name

3151_LSST

MCS Design Electrical Schematics

LSST TELESCOPE

Replaces | Replaced by

24 VDC DISTRIBUTION

Customer: EMPRESARIOS AGRUPADOS

C/Magallanes, 3
28015 MADRID
91 3098000
http://www.empresariosagrupados.es/

= E1

+ TMA-EL-CS-CBT-0101

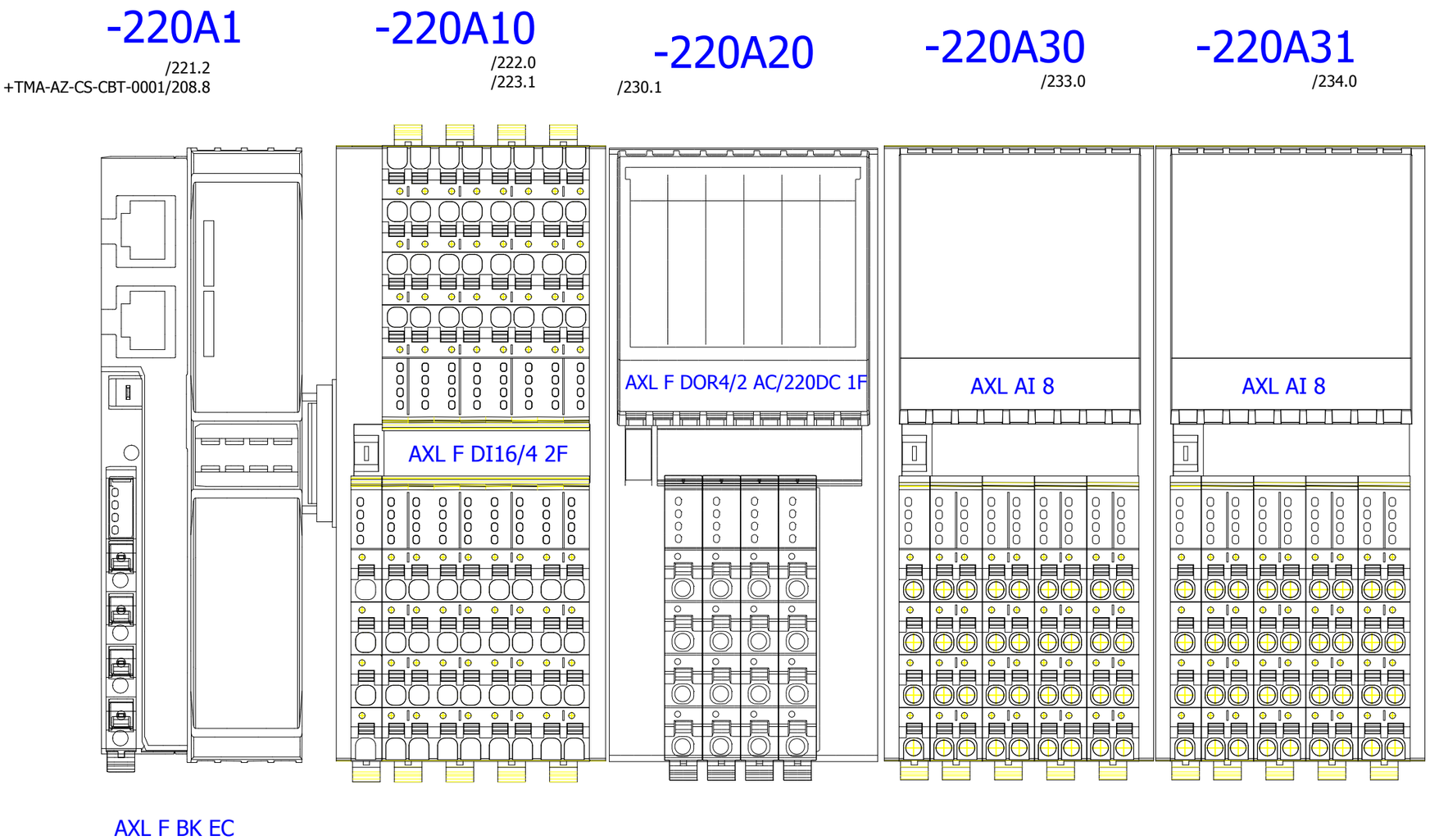

IK4 TEKNIKER Research Alliance

IK4-TEKNIKER
AVDA. OTAOLA 20
20600 Eibar (Gipuzkoa) Spain
Tfno.:(+34) 943 206744
Fax: (+34) 943 202757
Web: www.tekniker.es

Date	23/02/2017							
Reviewed	F.LÓPEZ	2.3	15/12/2017	JOSE MANUEL				
Drew by	jcastano	Review	Date	Name	Review	Date	Name	

3151_LSST — MCS Design Electrical Schematics

LSST TELESCOPE

Replaces | Replaced by

DISTRIBUTED IOs

Customer: EMPRESARIOS AGRUPADOS
C/Magallanes, 3
28015 MADRID
91 3098000
http://www.empresariosagrupados.es/

= E1

+ TMA-EL-CS-CBT-0101

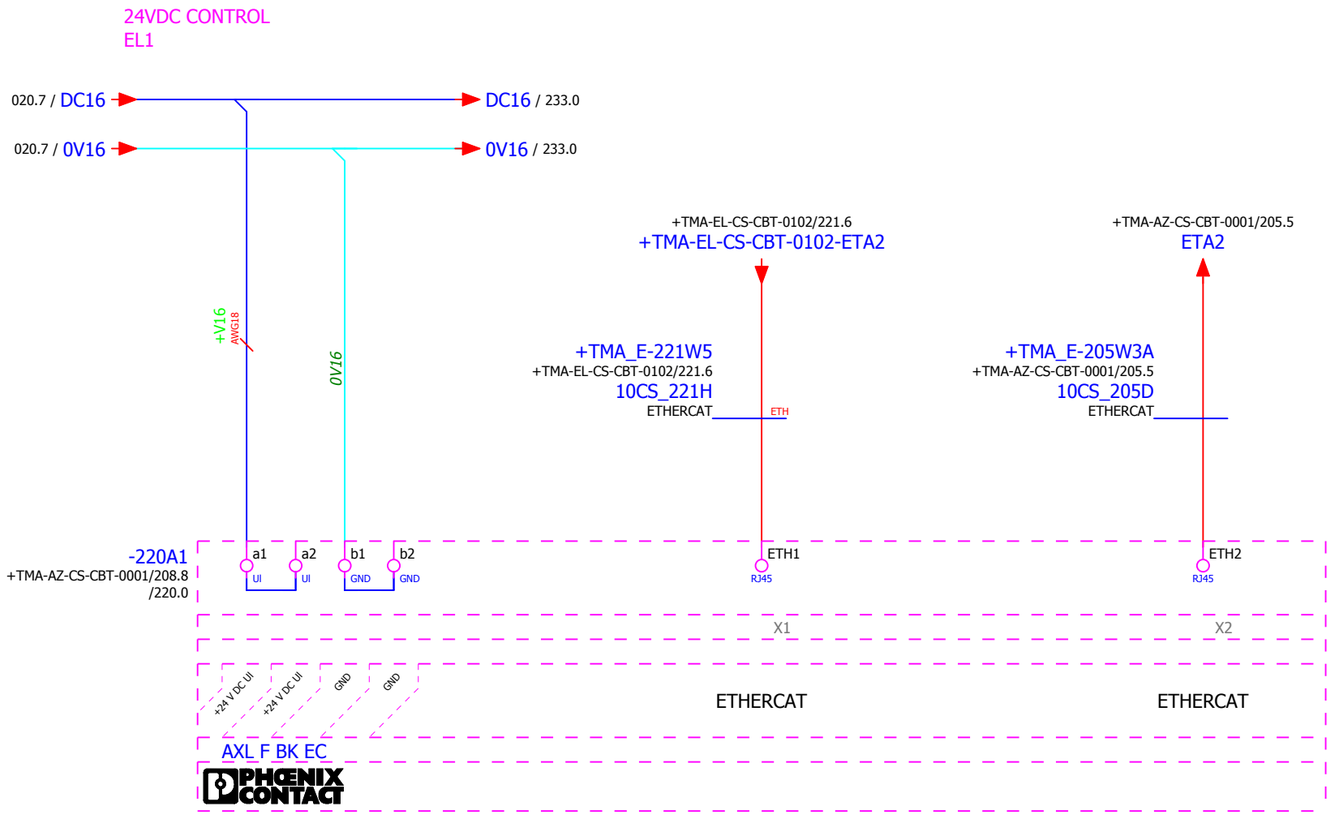

IK4 TEKNIKER Research Alliance

IK4-TEKNIKER
AVDA. OTAOLA 20
20600 Eibar (Gipuzkoa) Spain
Tfno.:(+34) 943 206744
Fax: (+34) 943 202757
Web: www.tekniker.es

Date	15/12/2017						
Reviewed	F.LÓPEZ	2.3	15/12/2017	JOSE MANUEL			
Drew by	JOSE MANUEL	Review	Date	Name	Review	Date	Name

3151_LSST

MCS Design Electrical Schematics

LSST TELESCOPE

Replaces | Replaced by

DISTRIBUTED IOs POWER & ETHERCAT

Customer: EMPRESARIOS AGRUPADOS
C/Magallanes, 3
28015 MADRID
91 3098000
http://www.empresariosagrupados.es/

= E1

+ TMA-EL-CS-CBT-0101

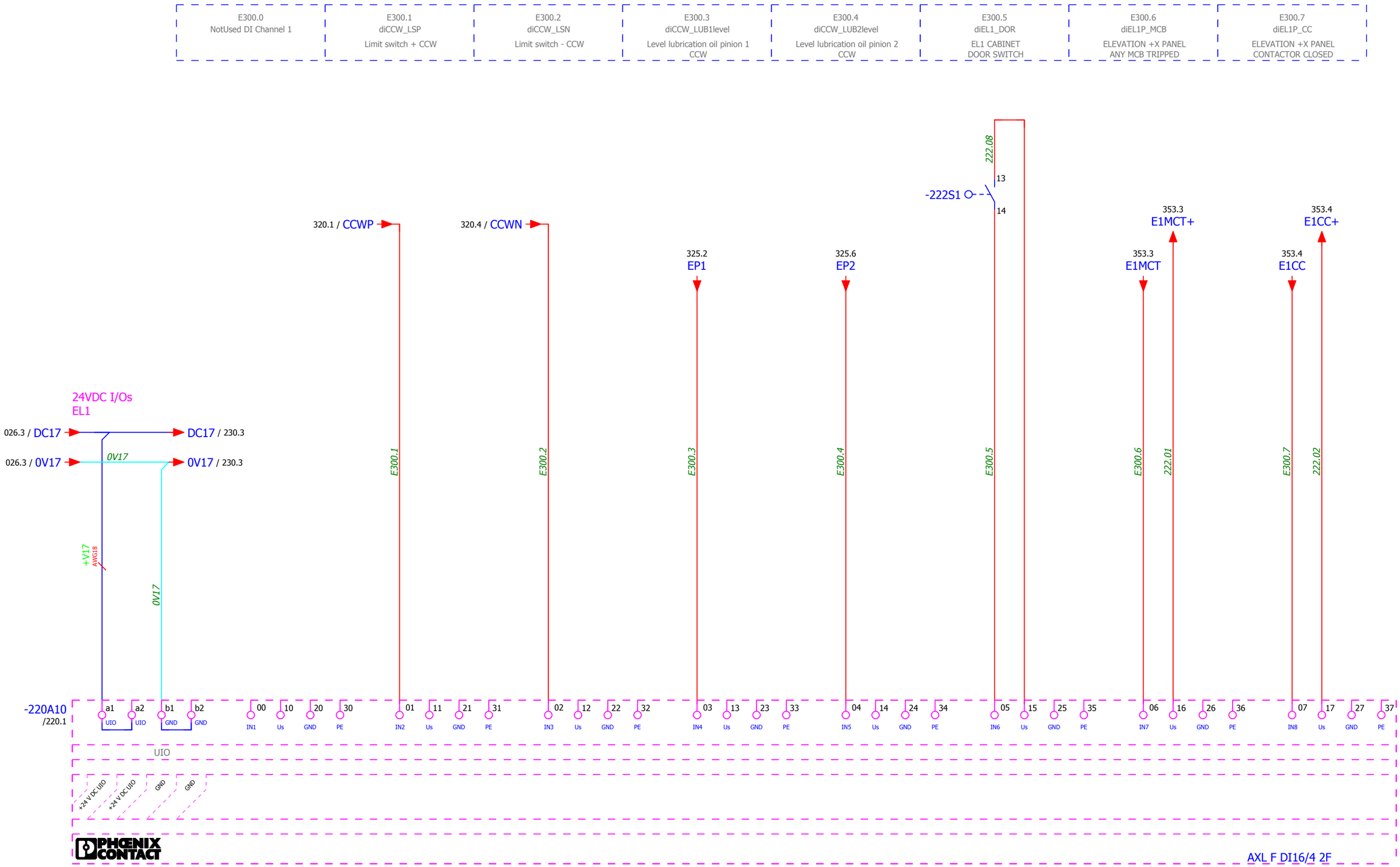

IK4 TEKNIKER
Research Alliance

IK4-TEKNIKER
AVDA. OTAOLA 20
20600 Eibar (Gipuzkoa) Spain
Tfno.:(+34) 943 206744
Fax: (+34) 943 202757
Web: www.tekniker.es

Date	15/12/2017						
Reviewed	F.LÓPEZ	2.3	15/12/2017	JOSE MANUEL			
Drew by	JOSE MANUEL	Review	Date	Name	Review	Date	Name

3151_LSST

MCS Design Electrical Schematics

LSST TELESCOPE

Replaces

Replaced by

DISTRIBUTED DIGITAL INPUT MODULE

Customer:
EMPRESARIOS AGRUPADOS
C/Magallanes, 3
28015 MADRID
91 3098000
http://www.empresariosagrupados.es/

= E1

+ TMA-EL-CS-CBT-0101

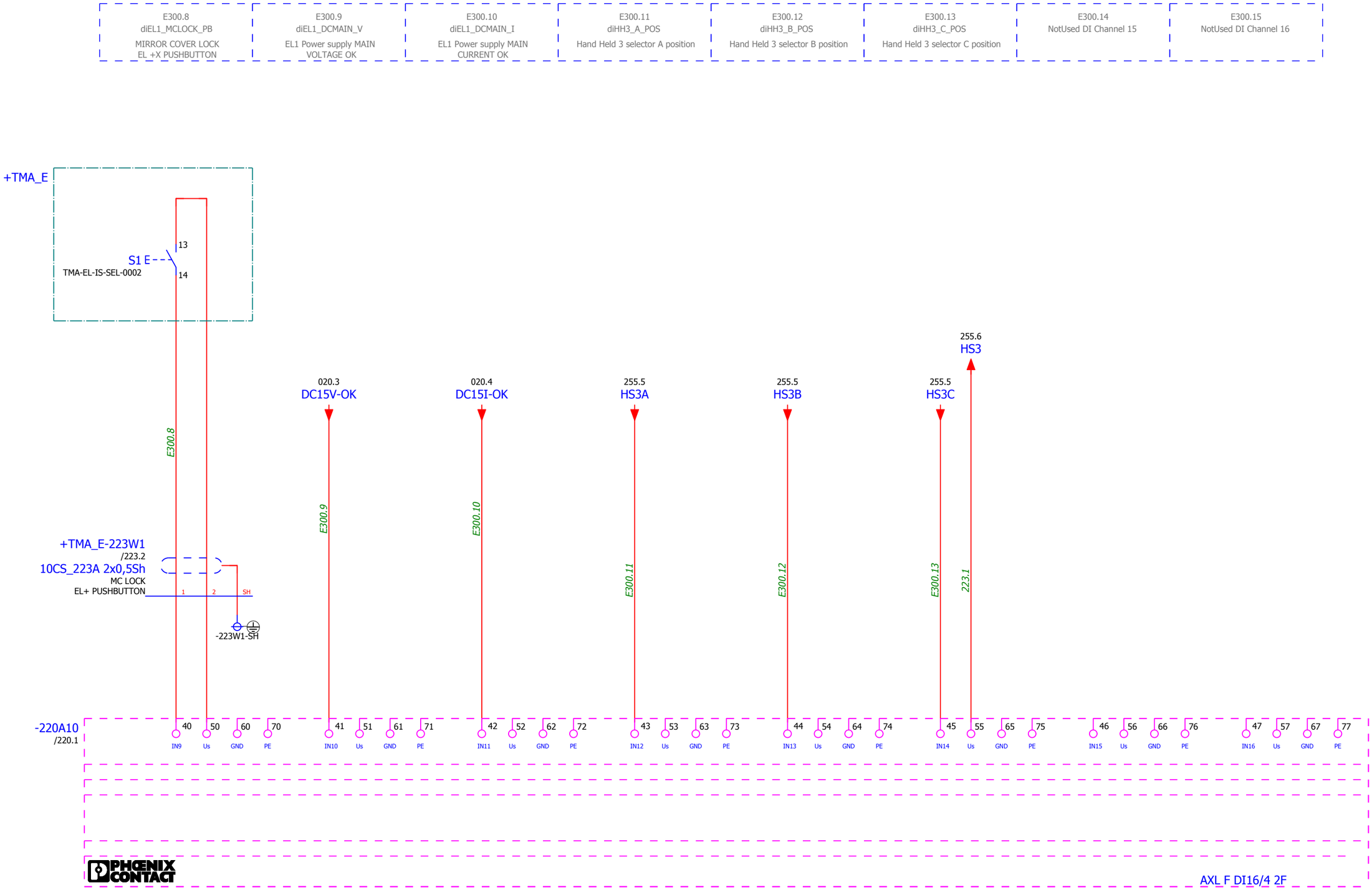

IK4 TEKNIKER Research Alliance

IK4-TEKNIKER
AVDA. OTAOLA 20
20600 Eibar (Gipuzkoa) Spain
Tfno.:(+34) 943 206744
Fax: (+34) 943 202757
Web: www.tekniker.es

Date	15/12/2017						
Reviewed	F.LÓPEZ	2.3	15/12/2017	JOSE MANUEL			
Drew by	JOSE MANUEL	Review	Date	Name	Review	Date	Name

3151_LSST

MCS Design Electrical Schematics

LSST TELESCOPE

Replaces | Replaced by

DISTRIBUTED DIGITAL INPUT MODULE

Customer: EMPRESARIOS AGRUPADOS

C/Magallanes, 3
28015 MADRID
91 3098000

http://www.empresariosagrupados.es/

= E1

+ TMA-EL-CS-CBT-0101

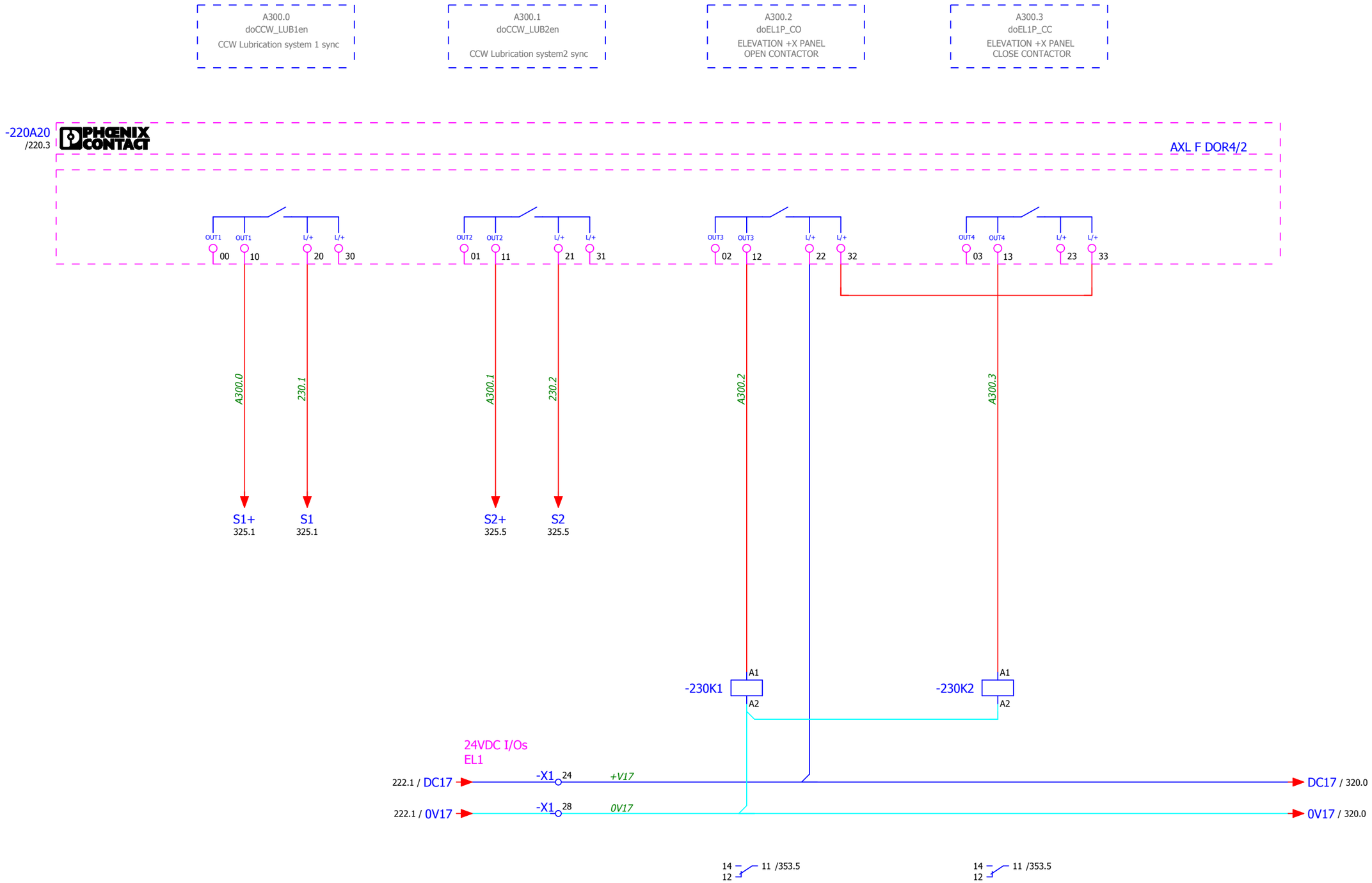

IK4 TEKNIKER Research Alliance
IK4-TEKNIKER
AVDA. OTAOLA 20
20600 Eibar (Gipuzkoa) Spain
Tfno.:(+34) 943 206744
Fax: (+34) 943 202757
Web: www.tekniker.es

Date	14/12/2017						
Reviewed	F.LÓPEZ	2.3	15/12/2017	JOSE MANUEL			
Drew by	JOSE MANUEL	Review	Date	Name	Review	Date	Name

3151_LSST
MCS Design Electrical Schematics
LSST TELESCOPE

Replaces | Replaced by

DISTRIBUTED DIGITAL OUTPUT MODULE

Customer:
EMPRESARIOS AGRUPADOS
C/Magallanes, 3
28015 MADRID
91 3098000
http://www.empresariosagrupados.es/

= E1
+ TMA-EL-CS-CBT-0101

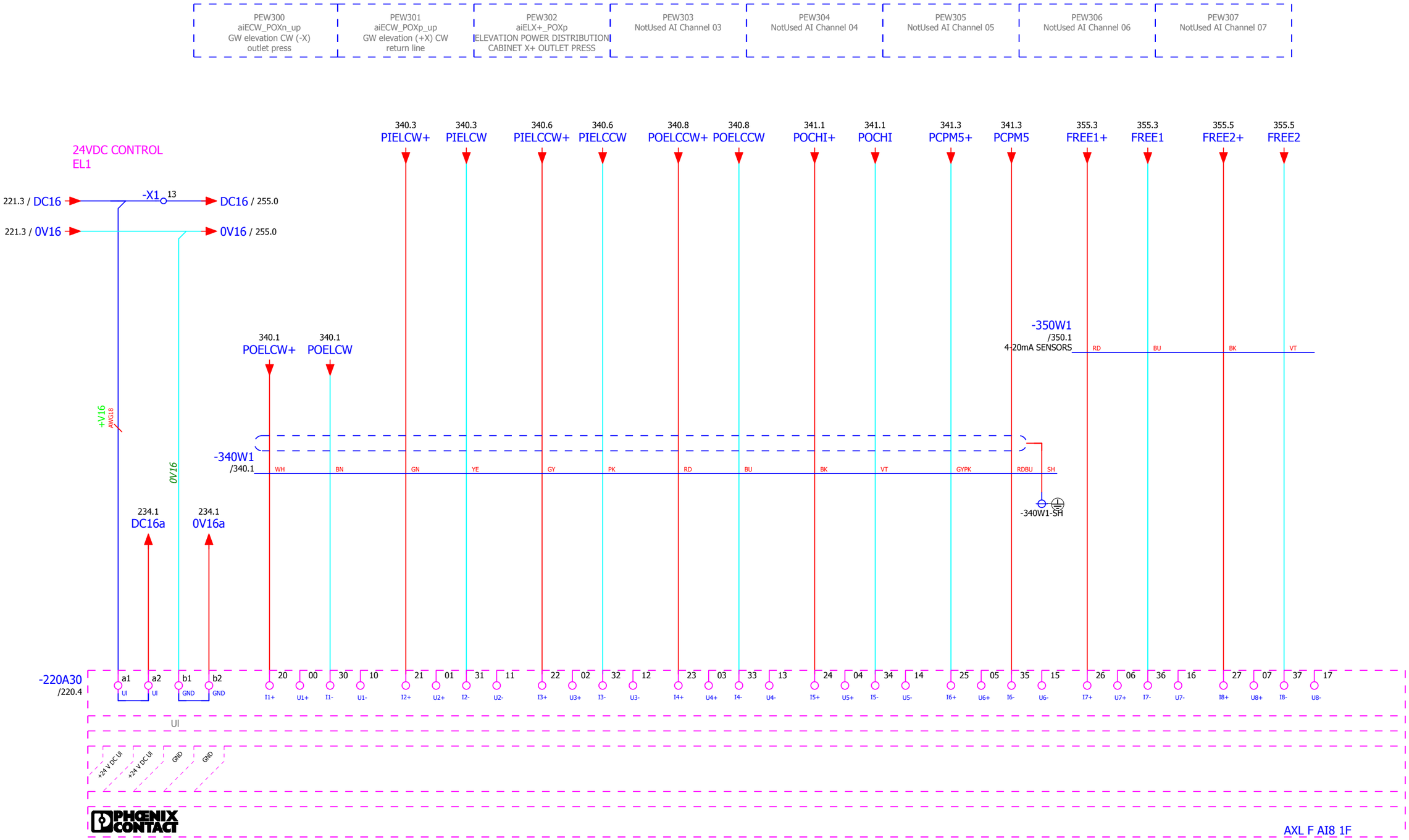

IK4 TEKNIKER Research Alliance

IK4-TEKNIKER
AVDA. OTAOLA 20
20600 Eibar (Gipuzkoa) Spain
Tfno.:(+34) 943 206744
Fax: (+34) 943 202757
Web: www.tekniker.es

Date	15/12/2017							
Reviewed	F.LÓPEZ	2.3	15/12/2017	JOSE MANUEL				
Drew by	JOSE MANUEL	Review	Date	Name	Review	Date	Name	

3151_LSST

MCS Design Electrical Schematics

LSST TELESCOPE

Replaces | Replaced by

DISTRIBUTED ANALOG INPUT MODULE

Customer: EMPRESARIOS AGRUPADOS
C/Magallanes, 3
28015 MADRID
91 3098000
http://www.empresariosagrupados.es/

= E1

+ TMA-EL-CS-CBT-0101

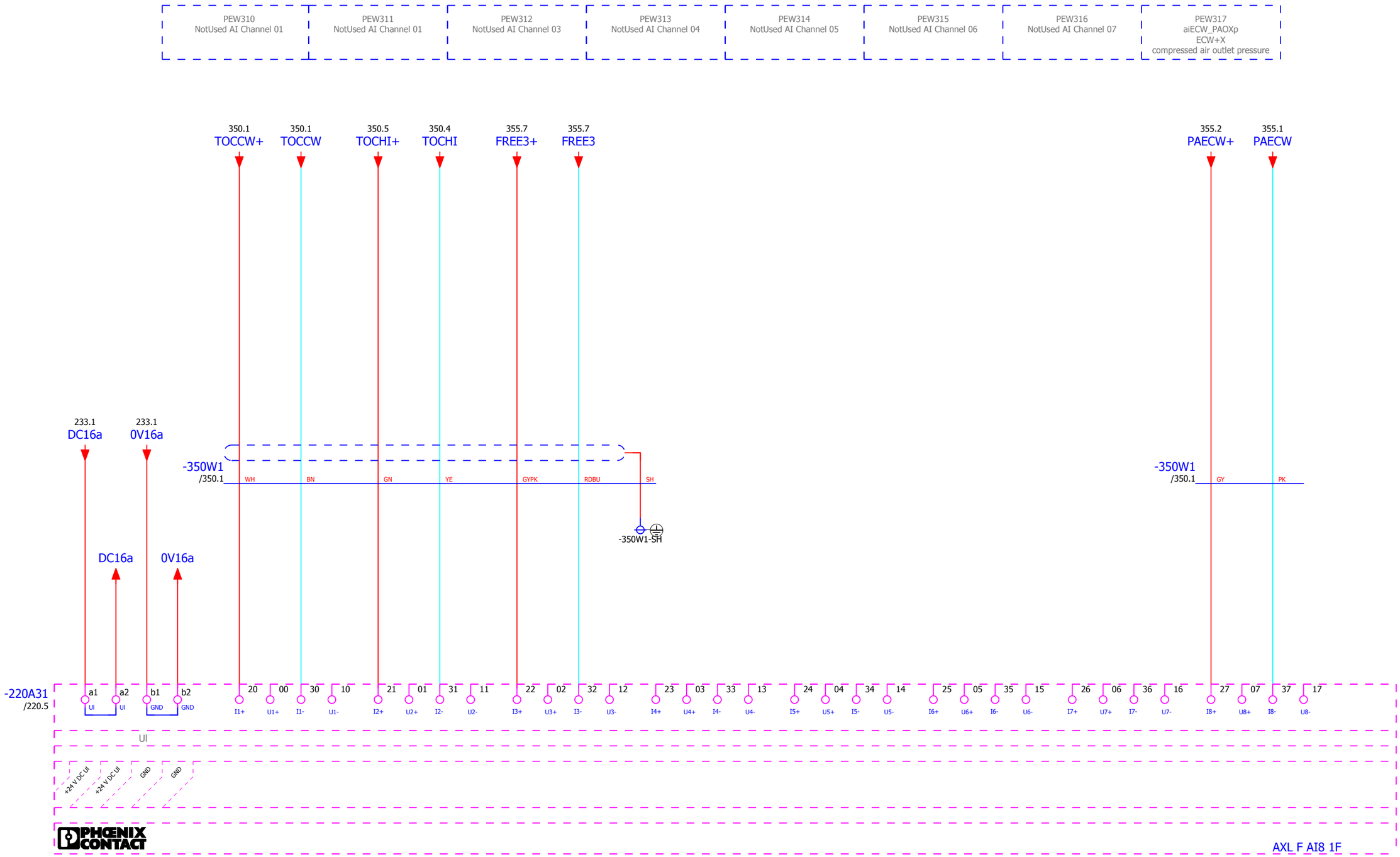

IK4 TEKNIKER Research Alliance
IK4-TEKNIKER
AVDA. OTAOLA 20
20600 Eibar (Gipuzkoa) Spain
Tfno.:(+34) 943 206744
Fax: (+34) 943 202757
Web: www.tekniker.es

Date	15/12/2017						
Reviewed	F.LÓPEZ	2.3	15/12/2017	JOSE MANUEL			
Drew by	JOSE MANUEL	Review	Date	Name	Review	Date	Name

3151_LSST

MCS Design Electrical Schematics

LSST TELESCOPE

Replaces | Replaced by

DISTRIBUTED ANALOG INPUT MODULE

Customer: EMPRESARIOS AGRUPADOS
C/Magallanes, 3
28015 MADRID
91 3098000
http://www.empresariosagrupados.es/

= E1

+ TMA-EL-CS-CBT-0101

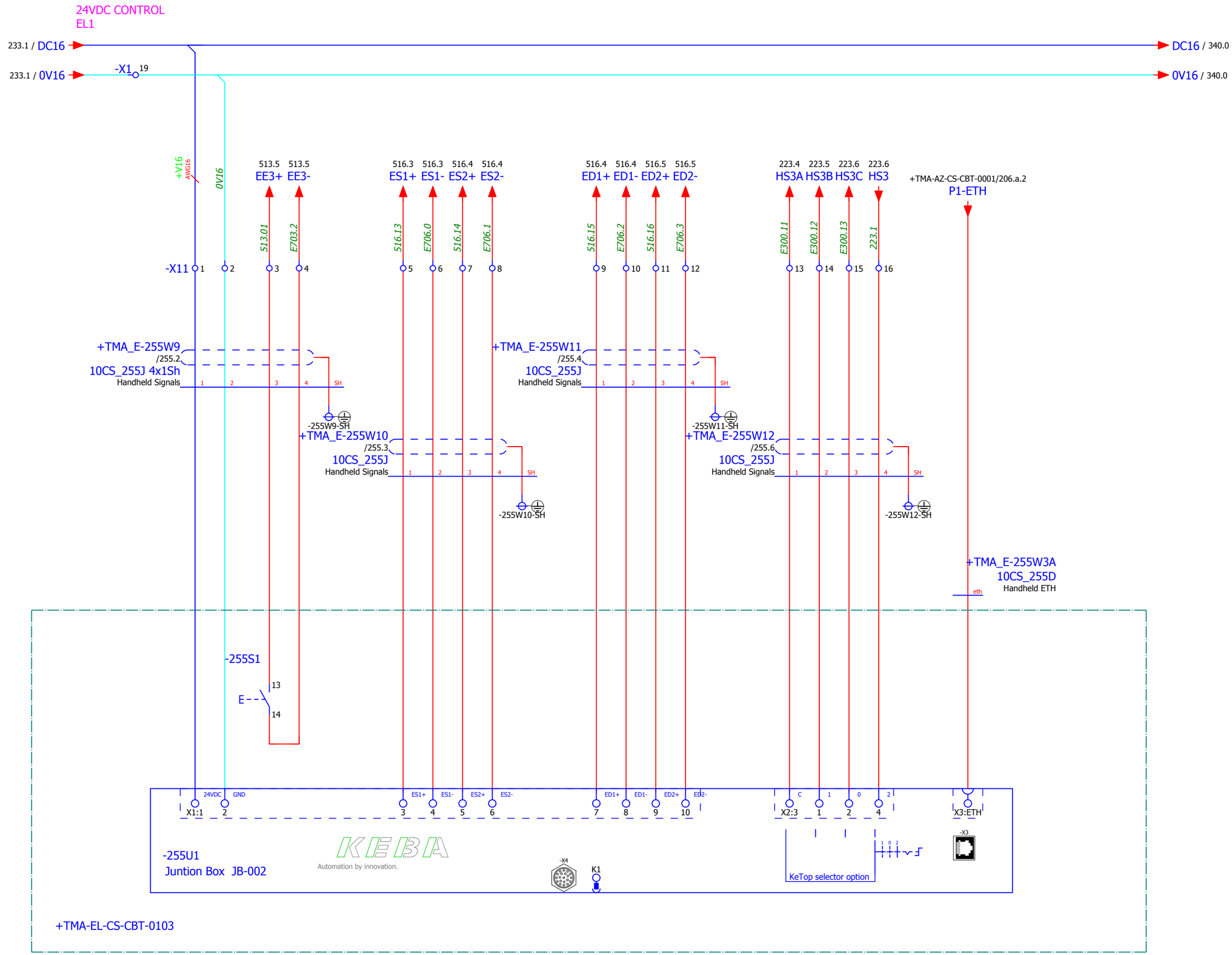

IK4 TEKNIKER
Research Alliance

IK4 TEKNIKER
POLO TECNOLOGICO DE EIBAR
C/Iñaki Goenaga nº 5
20600 Eibar (Gipuzkoa) Spain
Tfno.:(+34) 943 206744
Fax: (+34) 943 202757
Web: www.tekniker.es

Date	15/12/2017						
No traducción	E. LÓPEZ	2.3	15/12/2017	JOSE MANUEL			
Realizado	JOSE MANUEL	Revisión	Date	Name	Revisión	Date	Name

MCS Design Electrical Schematics
LSST TELESCOPE

Sustituye a: | Replaced by

HANDHELD

Cliente: EMPRESARIOS AGRUPADOS
C/Magallanes, 3
28015 MADRID
91 3098000
http://www.empresariosagrupados.es/

= E1
+ TMA-EL-CS-CBT-0101

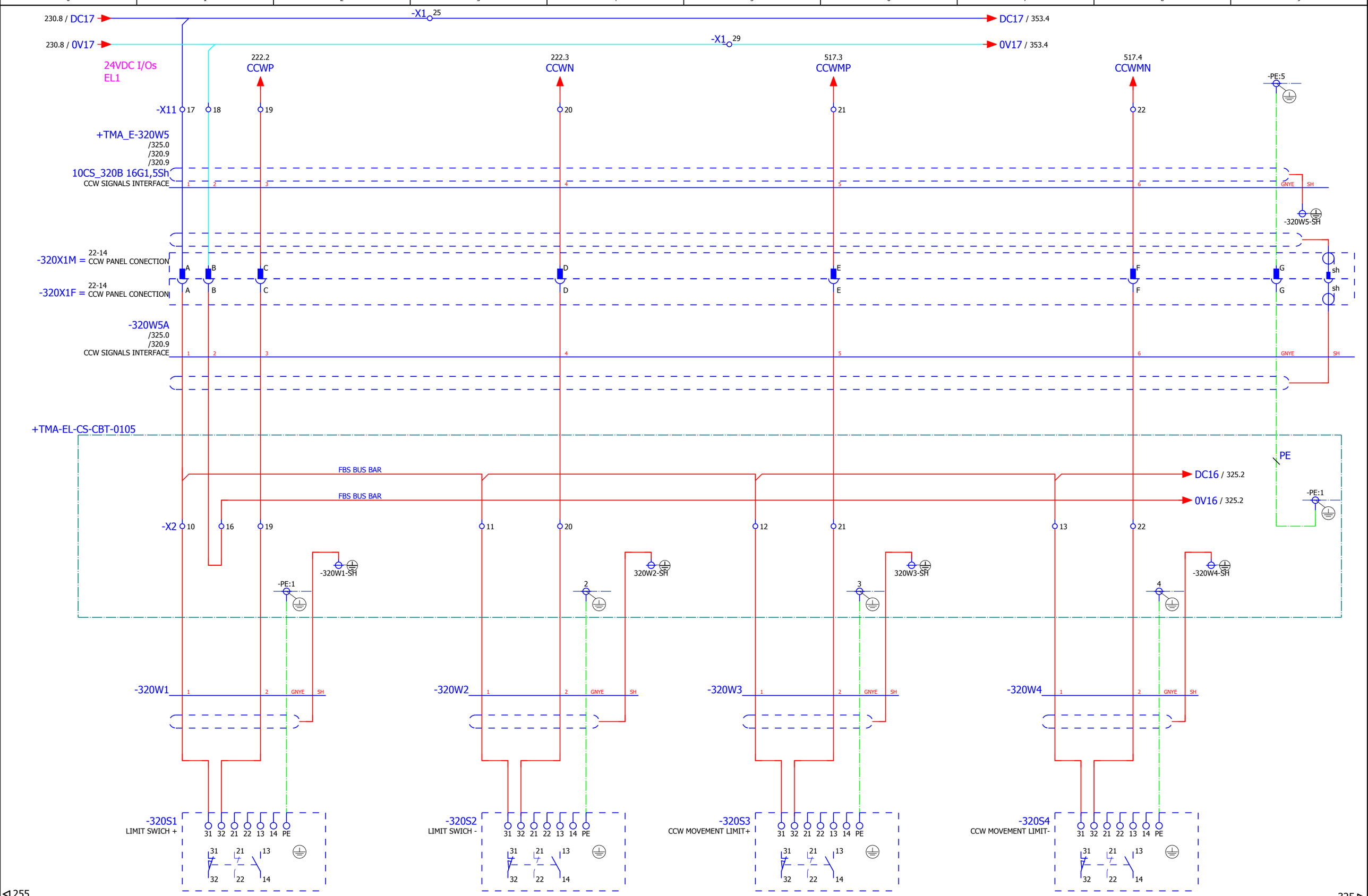

◁ 255

325 ▷

IK4 TEKNIKER Research Alliance	IK4-TEKNIKER AVDA. OTAOLA 20 20600 Eibar (Gipuzkoa) Spain Tfno.:(+34) 943 206744 Fax: (+34) 943 202757 Web: www.tekniker.es								3151_LSST	MCS Design Electrical Schematics LSST TELESCOPE	CAMERA CABLE WRAP LIMIT SWITCHES
		Date	15/12/2017								
		Reviewed	F.LÓPEZ	2.3	15/12/2017	JOSE MANUEL					
		Drew by	JOSE MANUEL	Review	Date	Name	Review	Date	Name	Replaces	Replaced by

Customer: EMPRESARIOS AGRUPADOS
C/Magallanes, 3
28015 MADRID
91 3098000
http://www.empresariosagrupados.es/

= E1
+ TMA-EL-CS-CBT-0101

Page 320
Total number 710

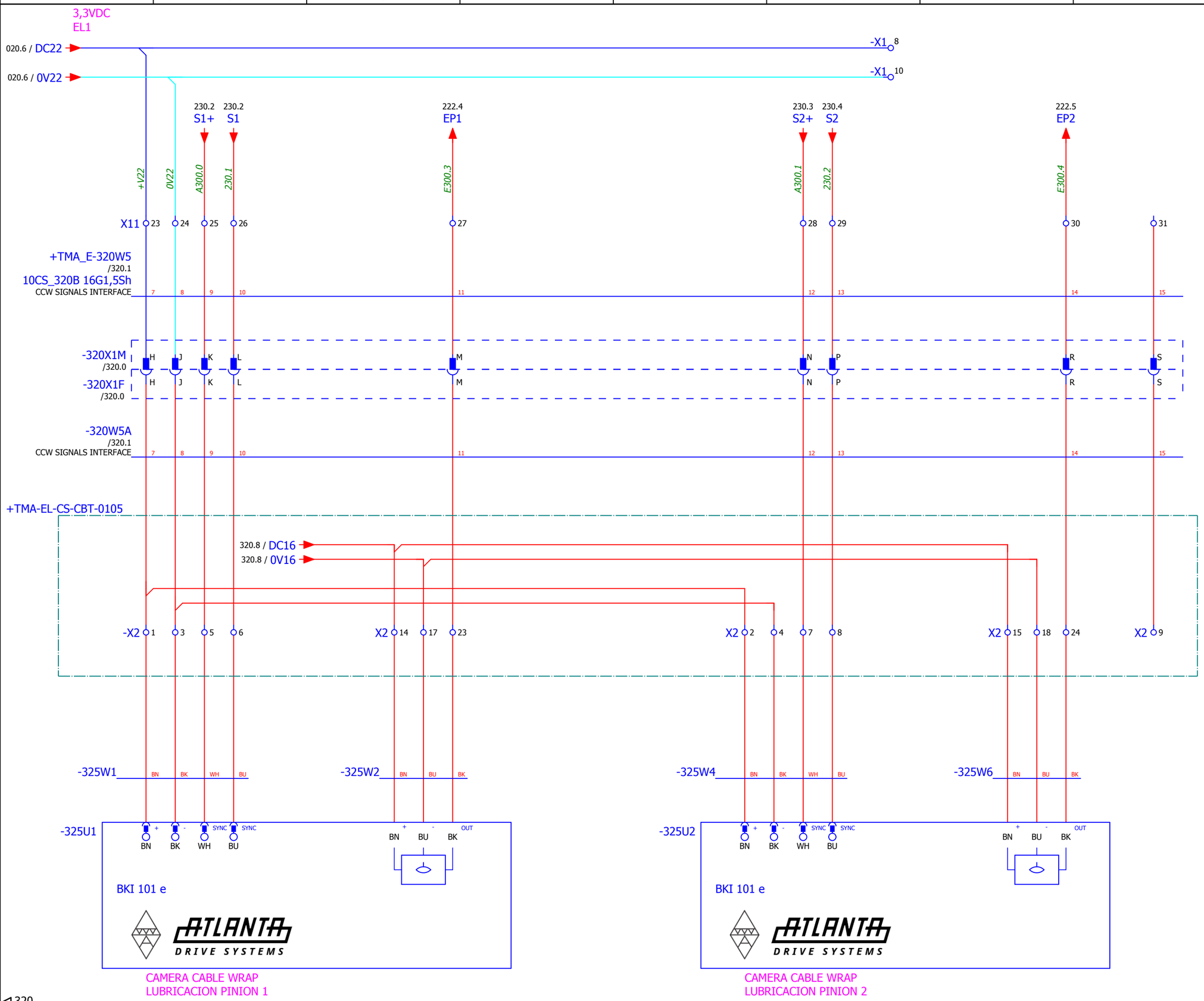

◁ 320

340 ▷

IK4 TEKNIKER Research Alliance	IK4-TEKNIKER AVDA. OTAOLA 20 20600 Eibar (Gipuzkoa) Spain Tfno.:(+34) 943 206744 Fax: (+34) 943 202757 Web: www.tekniker.es									3151_LSST	MCS Design Electrical Schematics LSST TELESCOPE	PINION LUBRICATION	Customer: EMPRESARIOS AGRUPADOS C/Magallanes, 3 28015 MADRID 91 3098000 http://www.empresariosagrupados.es/	= E1 + TMA-EL-CS-CBT-0101
		Date	15/12/2017											
		Reviewed	F.LÓPEZ	2.3	15/12/2017	JOSE MANUEL								
		Drew by	JOSE MANUEL	Review	Date	Name	Review	Date	Name	Replaces	Replaced by			Page 325 Total number 710

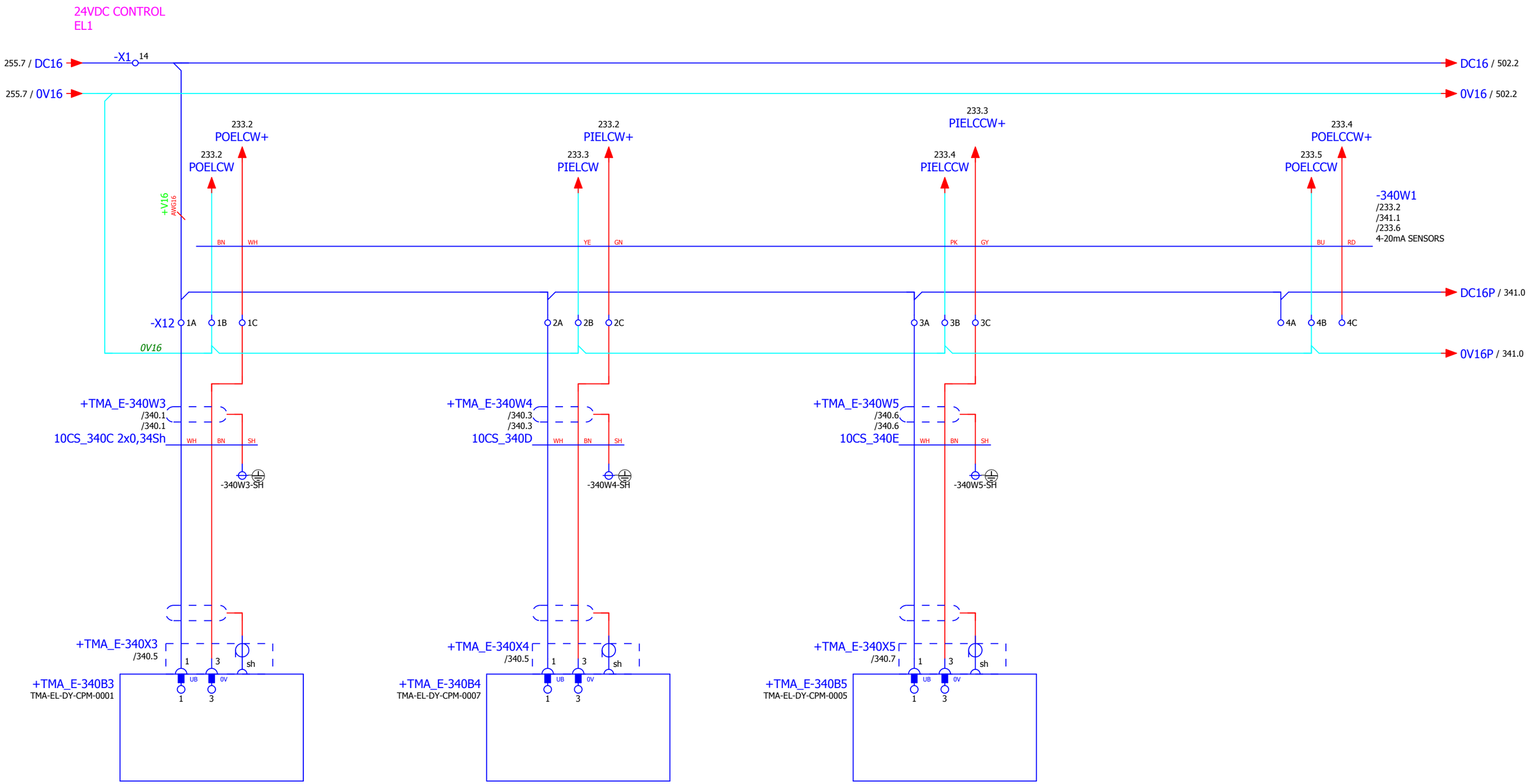

EL CW
COOLING CIRCUIT OUT PRESSURE

EL CW
COOLING CIRCUIT IN PRESSURE

EL POWER DISTRIBUTION CBT +X
OUTLET PRESS

TBD SENSOR:
TYPE OF SENSOR AND CONNECTION
REPRESENTED 4-20mA 2 WIRE M12 4 PIN CONNECTOR

+TMA_E-340X3 = EL CW COOLING CIRCUIT OUT PRESSURE

+TMA_E-340X4 = EL CW COOLING CIRCUIT IN PRESSURE

+TMA_E-340X5 = EL CCW COOLING CIRCUIT IN PRESSURE

IK4 TEKNIKER Research Alliance
IK4-TEKNIKER
AVDA. OTAOLA 20
20600 Eibar (Gipuzkoa) Spain
Tfno.:(+34) 943 206744
Fax: (+34) 943 202757
Web: www.tekniker.es

Date	15/12/2017						
Reviewed	F.LÓPEZ	2.3	15/12/2017	JOSE MANUEL			
Drew by	JOSE MANUEL	Review	Date	Name	Review	Date	Name

3151_LSST
MCS Design Electrical Schematics
LSST TELESCOPE

Replaces | Replaced by

COOLING PRESSURE SENSORS

Customer: EMPRESARIOS AGRUPADOS
C/Magallanes, 3
28015 MADRID
91 3098000
http://www.empresariosagrupados.es/

= E1
+ TMA-EL-CS-CBT-0101

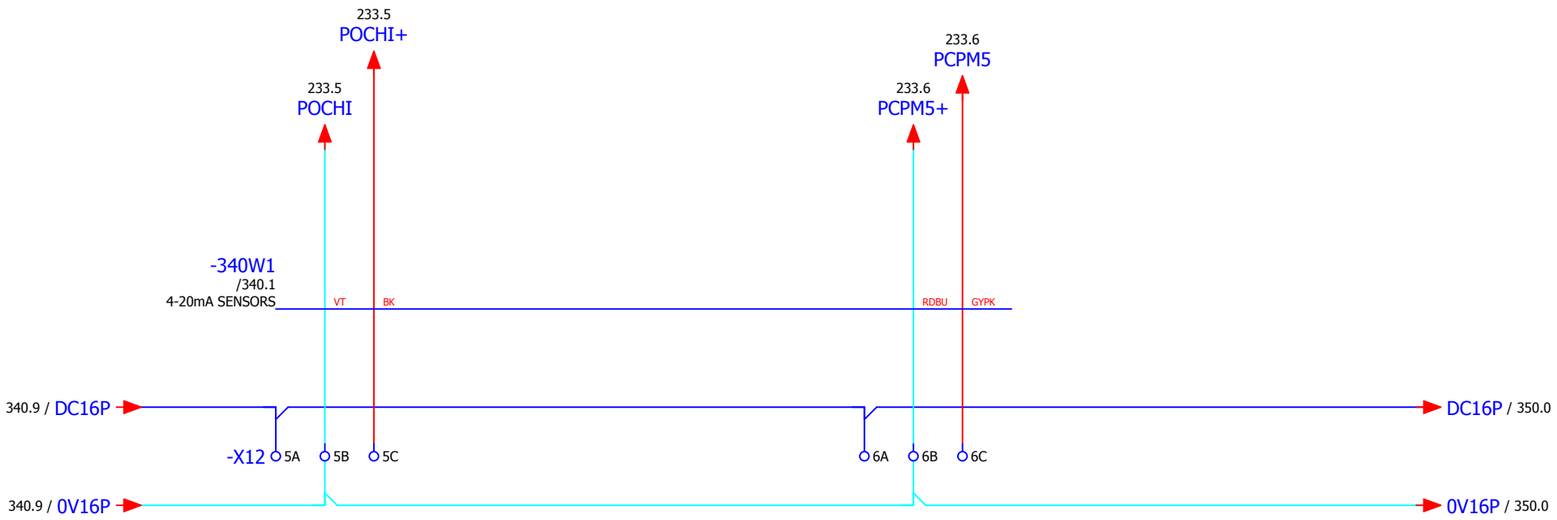

IK4 TEKNIKER Research Alliance

IK4-TEKNIKER
AVDA. OTAOLA 20
20600 Eibar (Gipuzkoa) Spain
Tfno.:(+34) 943 206744
Fax: (+34) 943 202757
Web: www.tekniker.es

Date	15/12/2017						
Reviewed	F.LÓPEZ	2.3	15/12/2017	JOSE MANUEL			
Drew by	JOSE MANUEL	Review	Date	Name	Review	Date	Name

3151_LSST

MCS Design Electrical Schematics

LSST TELESCOPE

Replaces

Replaced by

COOLING PRESSURE SENSORS

Customer:

EMPRESARIOS AGRUPADOS

C/Magallanes, 3
28015 MADRID
91 3098000

http://www.empresariosagrupados.es/

= E1

+ TMA-EL-CS-CBT-0101

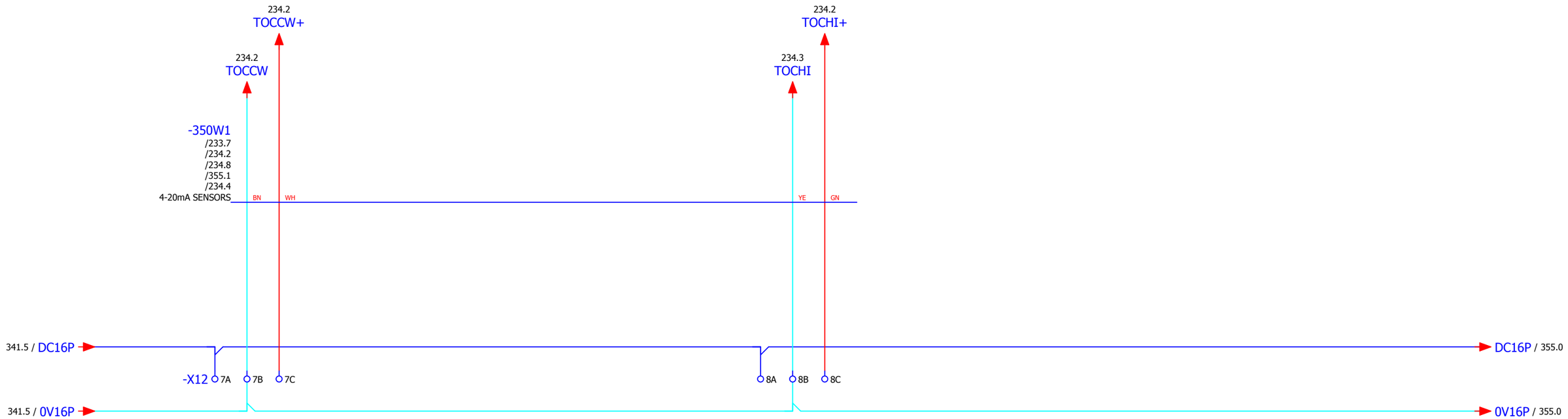

IK4-TEKNIKER
AVDA. OTAOLA 20
20600 Eibar (Gipuzkoa) Spain
Tfno.:(+34) 943 206744
Fax: (+34) 943 202757
Web: www.tekniker.es

Date	15/12/2017						
Reviewed	F.LÓPEZ	2.3	15/12/2017	JOSE MANUEL			
Drew by	JOSE MANUEL	Review	Date	Name	Review	Date	Name

3151_LSST

MCS Design Electrical Schematics

LSST TELESCOPE

Replaces

Replaced by

CCW & CHILLER TEMPERATURE PRESSURE SENSORS

Customer:

EMPRESARIOS AGRUPADOS

C/Magallanes, 3
28015 MADRID
91 3098000

http://www.empresariosagrupados.es/

= E1

+ TMA-EL-CS-CBT-0101

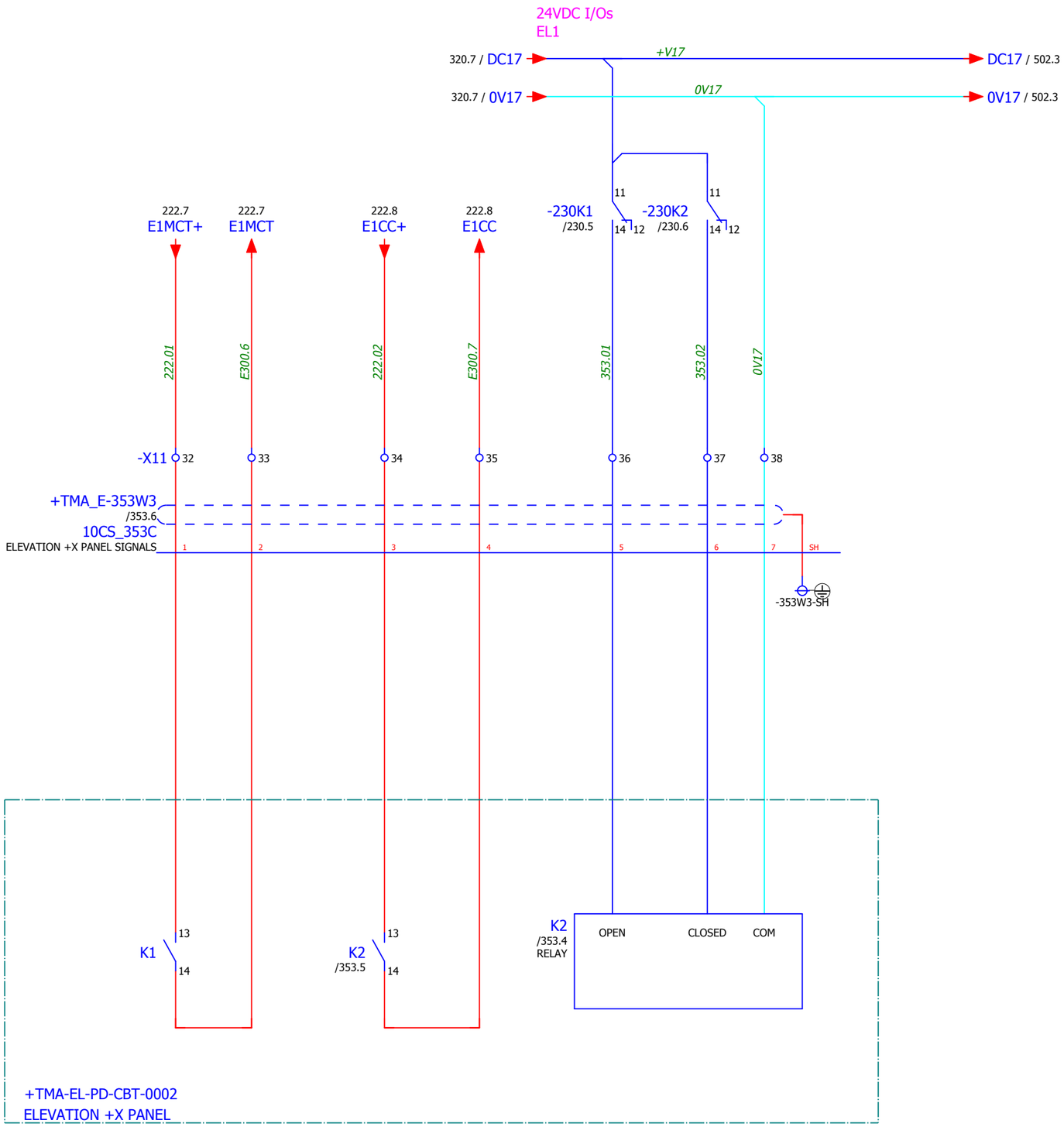

IK4 TEKNIKER Research Alliance
IK4-TEKNIKER
AVDA. OTAOLA 20
20600 Eibar (Gipuzkoa) Spain
Tfno.:(+34) 943 206744
Fax: (+34) 943 202757
Web: www.tekniker.es

Date	15/12/2017						
Reviewed	F.LÓPEZ	2.3	15/12/2017	JOSE MANUEL			
Drew by	JOSE MANUEL	Review	Date	Name	Review	Date	Name

3151_LSST

MCS Design Electrical Schematics

LSST TELESCOPE

Replaces

Replaced by

ELEVATION X+ PANEL

Customer:

EMPRESARIOS AGRUPADOS

C/Magallanes, 3
28015 MADRID
91 3098000

http://www.empresariosagrupados.es/

= E1

+ TMA-EL-CS-CBT-0101

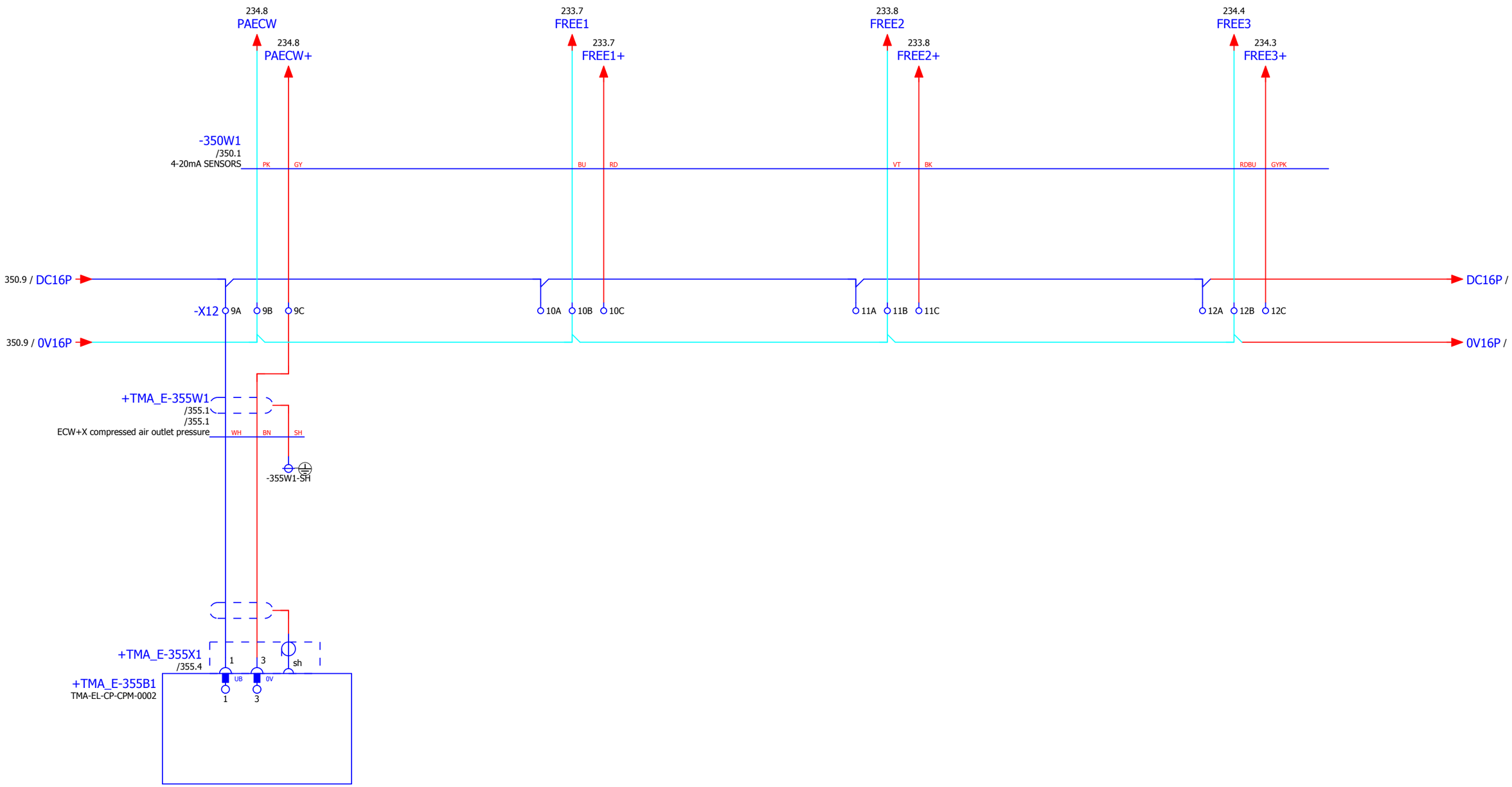

ECW+X compressed air outlet pressure

TBD SENSOR:
TIPO DE SENSOR Y CONEXION
SENSOR REPRESENTADO 4-20mA
TECNICA DE CONEXION A 2 HILOS
CONECTOR M12 4 PIN

+TMA_E-355X1 = SHIELDED M12 4 PIN
ECW+X compressed air outlet pressure

IK4 TEKNIKER Research Alliance
IK4-TEKNIKER
AVDA. OTAOLA 20
20600 Eibar (Gipuzkoa) Spain
Tfno.:(+34) 943 206744
Fax: (+34) 943 202757
Web: www.tekniker.es

Date	15/12/2017						
Reviewed	F.LÓPEZ	2.3	15/12/2017	JOSE MANUEL			
Drew by	JOSE MANUEL	Review	Date	Name	Review	Date	Name

3151_LSST
MCS Design Electrical Schematics
LSST TELESCOPE
Replaces
Replaced by

AIR PRESSURE SENSORS

Customer: EMPRESARIOS AGRUPADOS
C/Magallanes, 3
28015 MADRID
91 3098000
http://www.empresariosagrupados.es/

= E1
+ TMA-EL-CS-CBT-0101

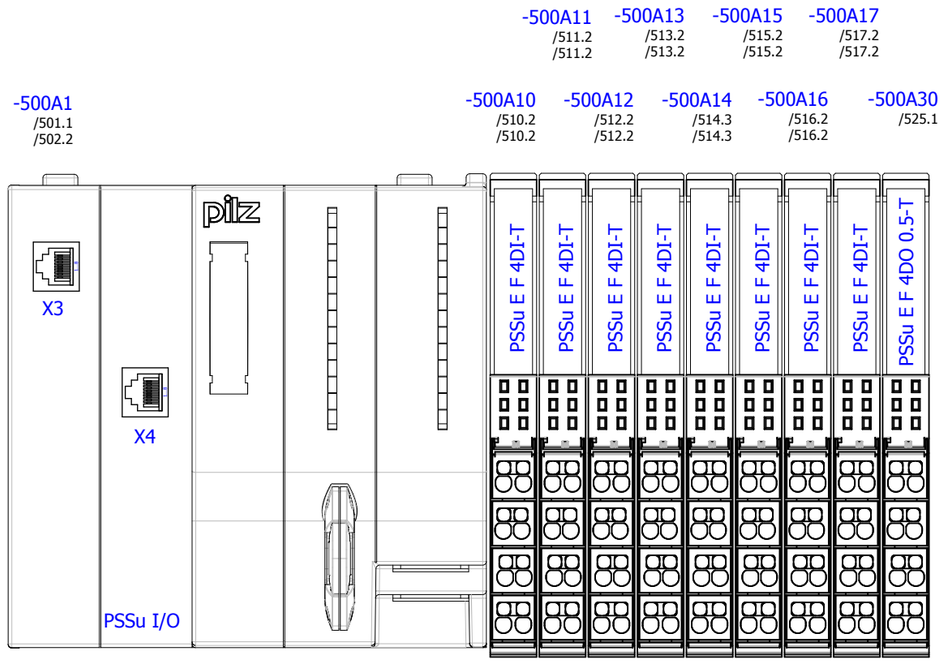

IK4-TEKNIKER
AVDA. OTAOLA 20
20600 Eibar (Gipuzkoa) Spain
Tfno.:(+34) 943 206744
Fax: (+34) 943 202757
Web: www.tekniker.es

Date	23/02/2017						
Reviewed	F.LÓPEZ	2.3	15/12/2017	JOSE MANUEL			
Drew by	jcastano	Review	Date	Name	Review	Date	Name

3151_LSST
MCS Design Electrical Schematics
LSST TELESCOPE

Replaces | Replaced by

EMERGENCY PLC PSSuniversal

Customer:
EMPRESARIOS AGRUPADOS
C/Magallanes, 3
28015 MADRID
91 3098000
http://www.empresariosagrupados.es/

= E1
+ TMA-EL-CS-CBT-0101

Page 500
Total number 710

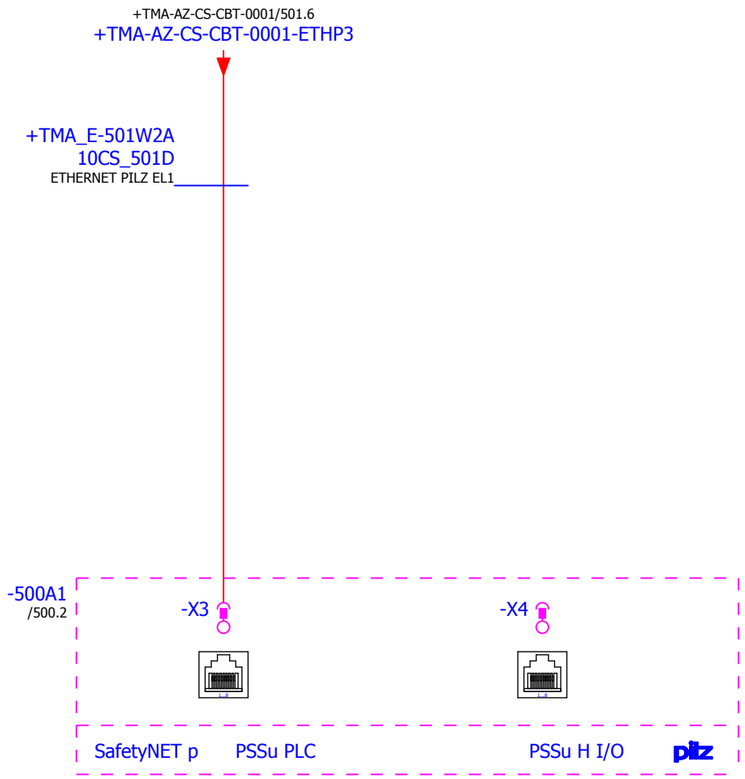

IK4 TEKNIKER Research Alliance

IK4-TEKNIKER
AVDA. OTAOLA 20
20600 Eibar (Gipuzkoa) Spain
Tfno.:(+34) 943 206744
Fax: (+34) 943 202757
Web: www.tekniker.es

Date	15/12/2017						
Reviewed	F.LÓPEZ	2.3	15/12/2017	JOSE MANUEL			
Drew by	JOSE MANUEL	Review	Date	Name	Review	Date	Name

3151_LSST

MCS Design Electrical Schematics

LSST TELESCOPE

Replaces | Replaced by

SAFETY NET

Customer: EMPRESARIOS AGRUPADOS
C/Magallanes, 3
28015 MADRID
91 3098000
http://www.empresariosagrupados.es/

= E1

+ TMA-EL-CS-CBT-0101

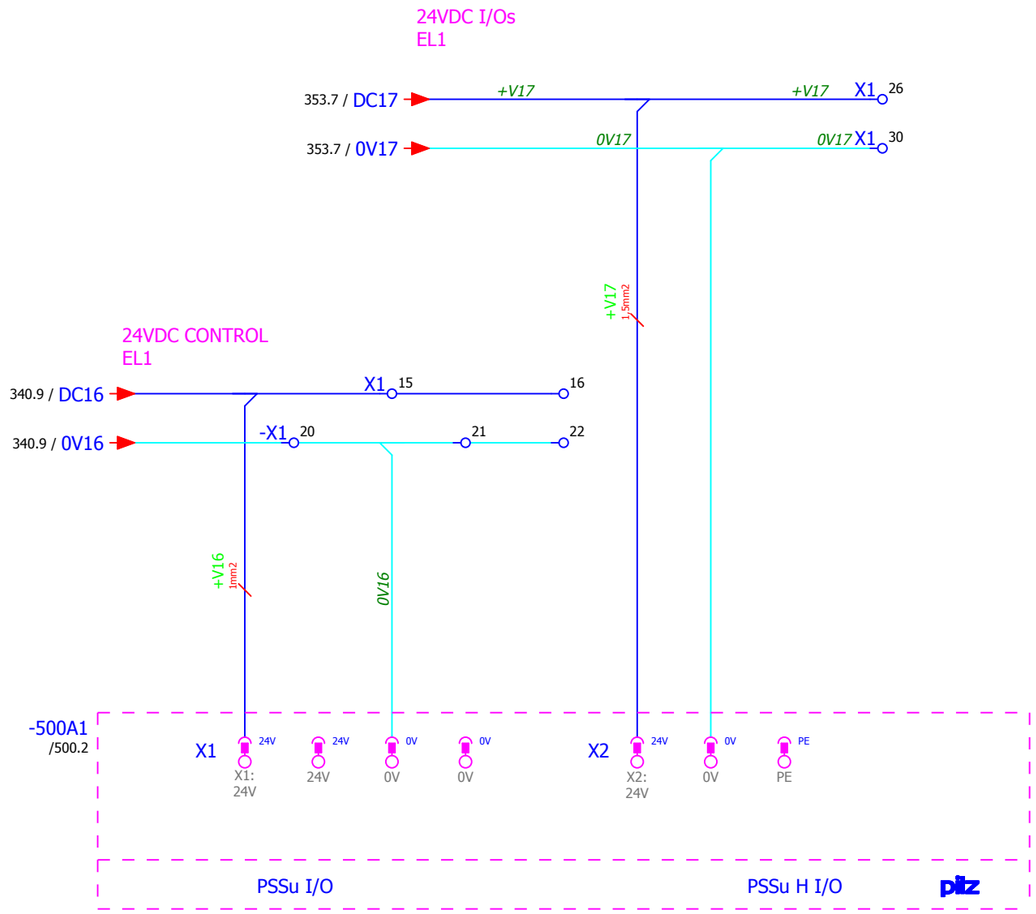

IK4-TEKNIKER
AVDA. OTAOLA 20
20600 Eibar (Gipuzkoa) Spain
Tfno.:(+34) 943 206744
Fax: (+34) 943 202757
Web: www.tekniker.es

Date	15/12/2017						
Reviewed	F.LÓPEZ	2.3	15/12/2017	JOSE MANUEL			
Drew by	JOSE MANUEL	Review	Date	Name	Review	Date	Name

3151_LSST
MCS Design Electrical Schematics
LSST TELESCOPE

Replaces | Replaced by

POWER SAFETY PSS

Customer: EMPRESARIOS AGRUPADOS
C/Magallanes, 3
28015 MADRID
91 3098000
http://www.empresariosagrupados.es/

= E1
+ TMA-EL-CS-CBT-0101

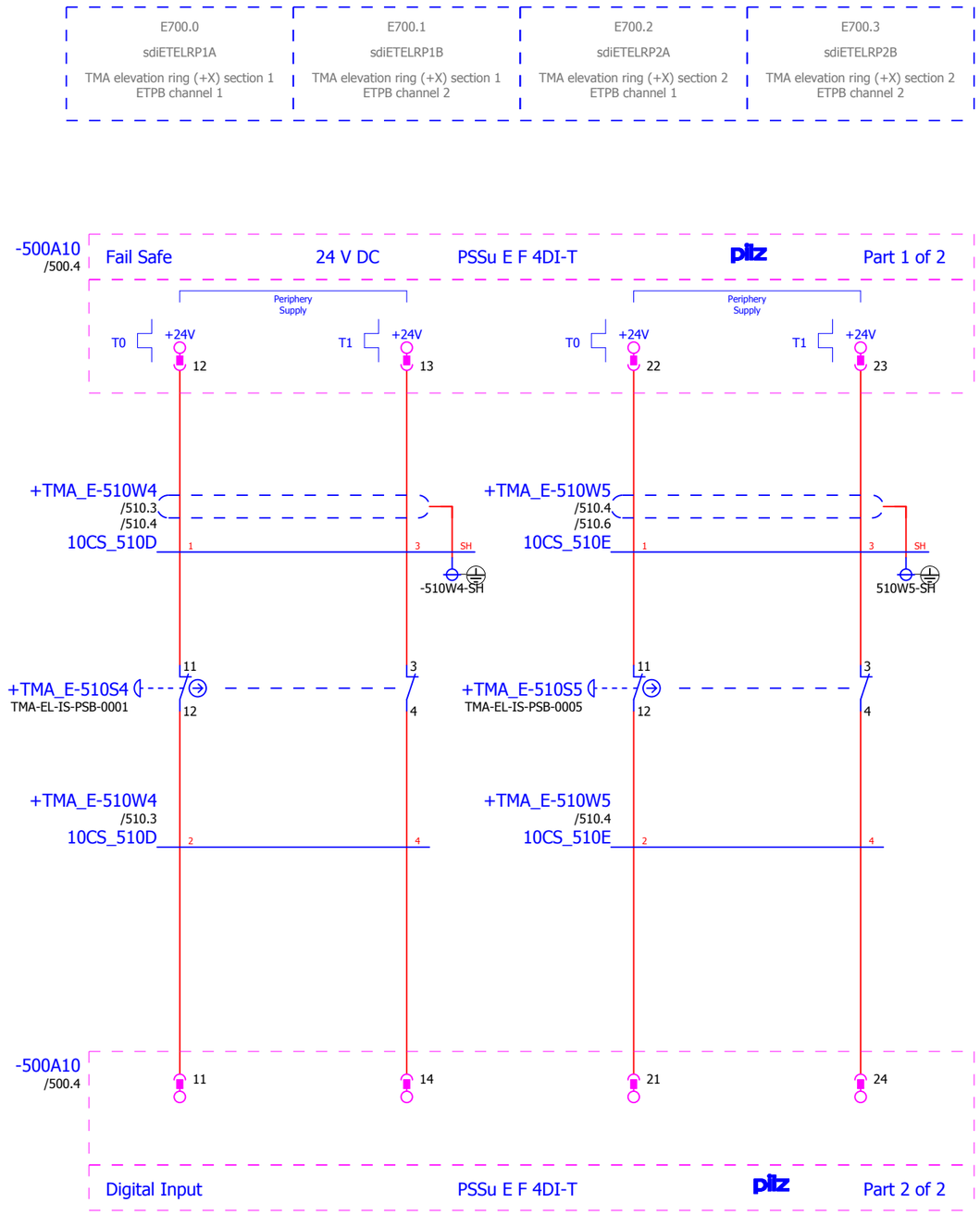

IK4 TEKNIKER Research Alliance

IK4-TEKNIKER
AVDA. OTAOLA 20
20600 Eibar (Gipuzkoa) Spain
Tfno.:(+34) 943 206744
Fax: (+34) 943 202757
Web: www.tekniker.es

Date	15/12/2017						
Reviewed	F.LÓPEZ	2.3	15/12/2017	JOSE MANUEL			
Drew by	JOSE MANUEL	Review	Date	Name	Review	Date	Name

3151_LSST

MCS Design Electrical Schematics

LSST TELESCOPE

Replaces | Replaced by

SAFETY DIGITAL INPUTS

Customer: EMPRESARIOS AGRUPADOS

C/Magallanes, 3
28015 MADRID
91 3098000
http://www.empresariosagrupados.es/

= E1

+ TMA-EL-CS-CBT-0101

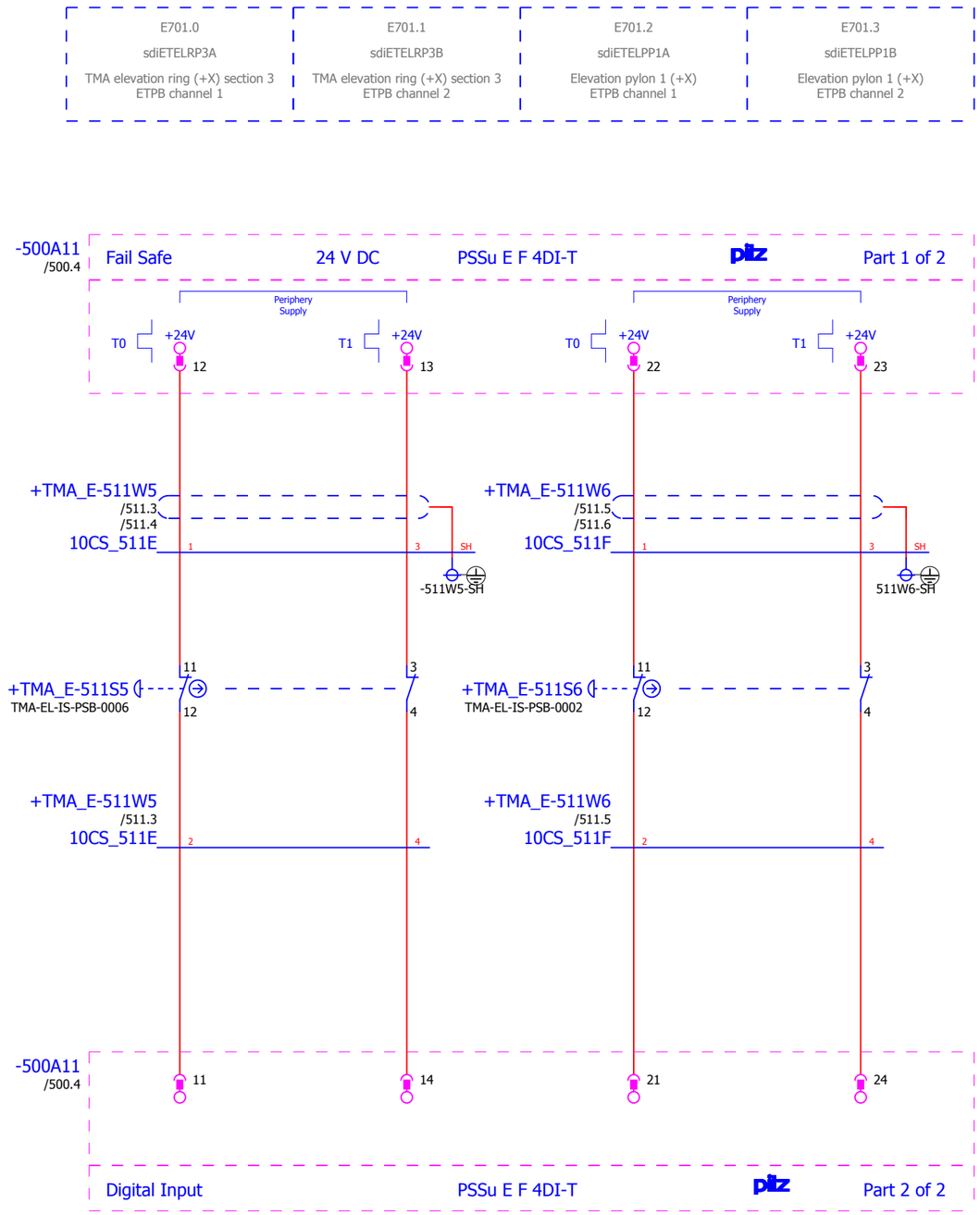

IK4 TEKNIKER Research Alliance

IK4-TEKNIKER
AVDA. OTAOLA 20
20600 Eibar (Gipuzkoa) Spain
Tfno.:(+34) 943 206744
Fax: (+34) 943 202757
Web: www.tekniker.es

Date	15/12/2017						
Reviewed	F.LÓPEZ	2.3	15/12/2017	JOSE MANUEL			
Drew by	JOSE MANUEL	Review	Date	Name	Review	Date	Name

3151_LSST

MCS Design Electrical Schematics

LSST TELESCOPE

Replaces | Replaced by

SAFETY DIGITAL INPUTS

Customer: EMPRESARIOS AGRUPADOS
C/Magallanes, 3
28015 MADRID
91 3098000
http://www.empresariosagrupados.es/

= E1

+ TMA-EL-CS-CBT-0101

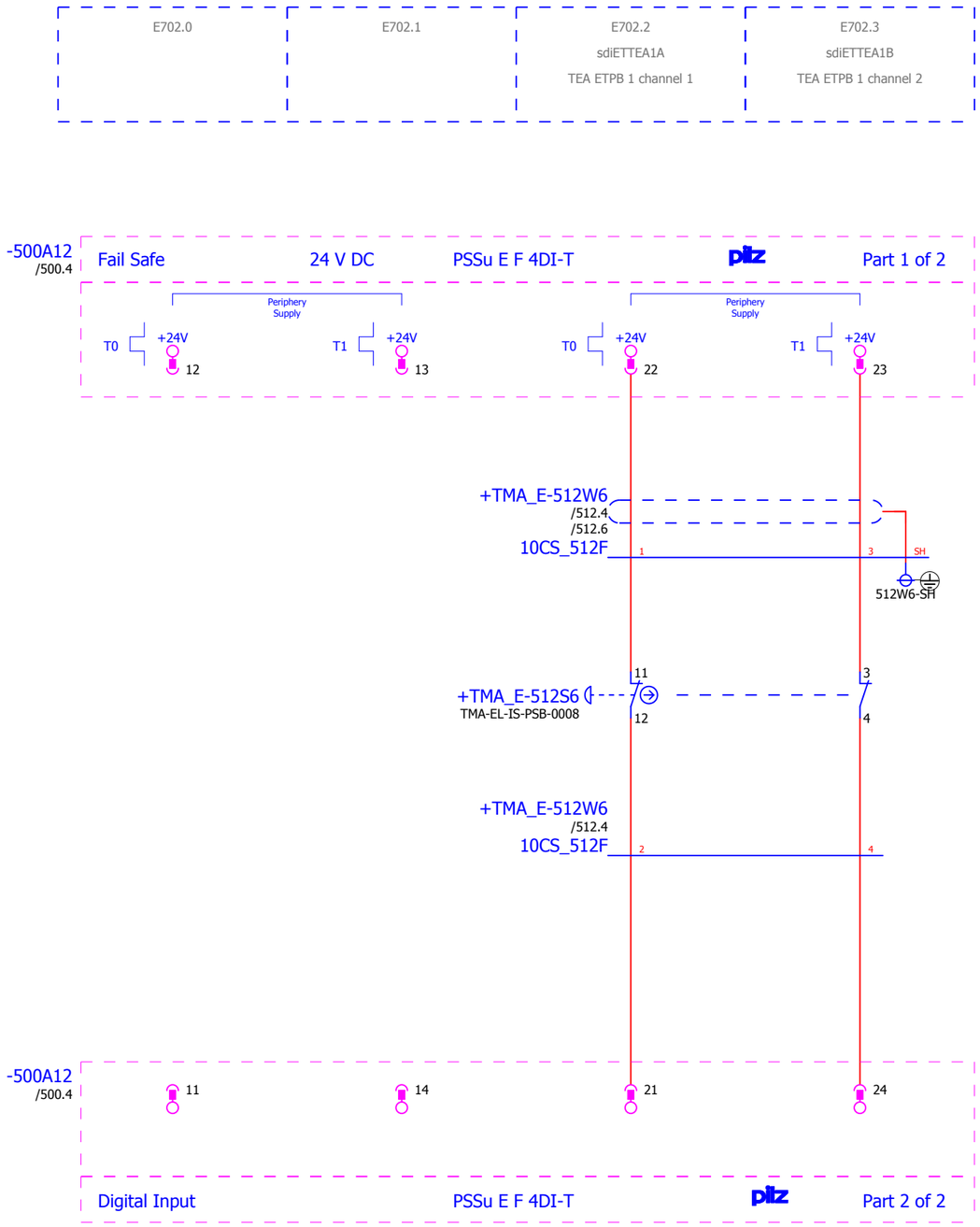

IK4-TEKNIKER
AVDA. OTAOLA 20
20600 Eibar (Gipuzkoa) Spain
Tfno.:(+34) 943 206744
Fax: (+34) 943 202757
Web: www.tekniker.es

Date	15/12/2017						
Reviewed	F.LÓPEZ	2.3	15/12/2017	JOSE MANUEL			
Drew by	JOSE MANUEL	Review	Date	Name	Review	Date	Name

3151_LSST

MCS Design Electrical Schematics

LSST TELESCOPE

Replaces | Replaced by

SAFETY DIGITAL INPUTS

Customer: EMPRESARIOS AGRUPADOS

C/Magallanes, 3
28015 MADRID
91 3098000
http://www.empresariosagrupados.es/

= E1

+ TMA-EL-CS-CBT-0101

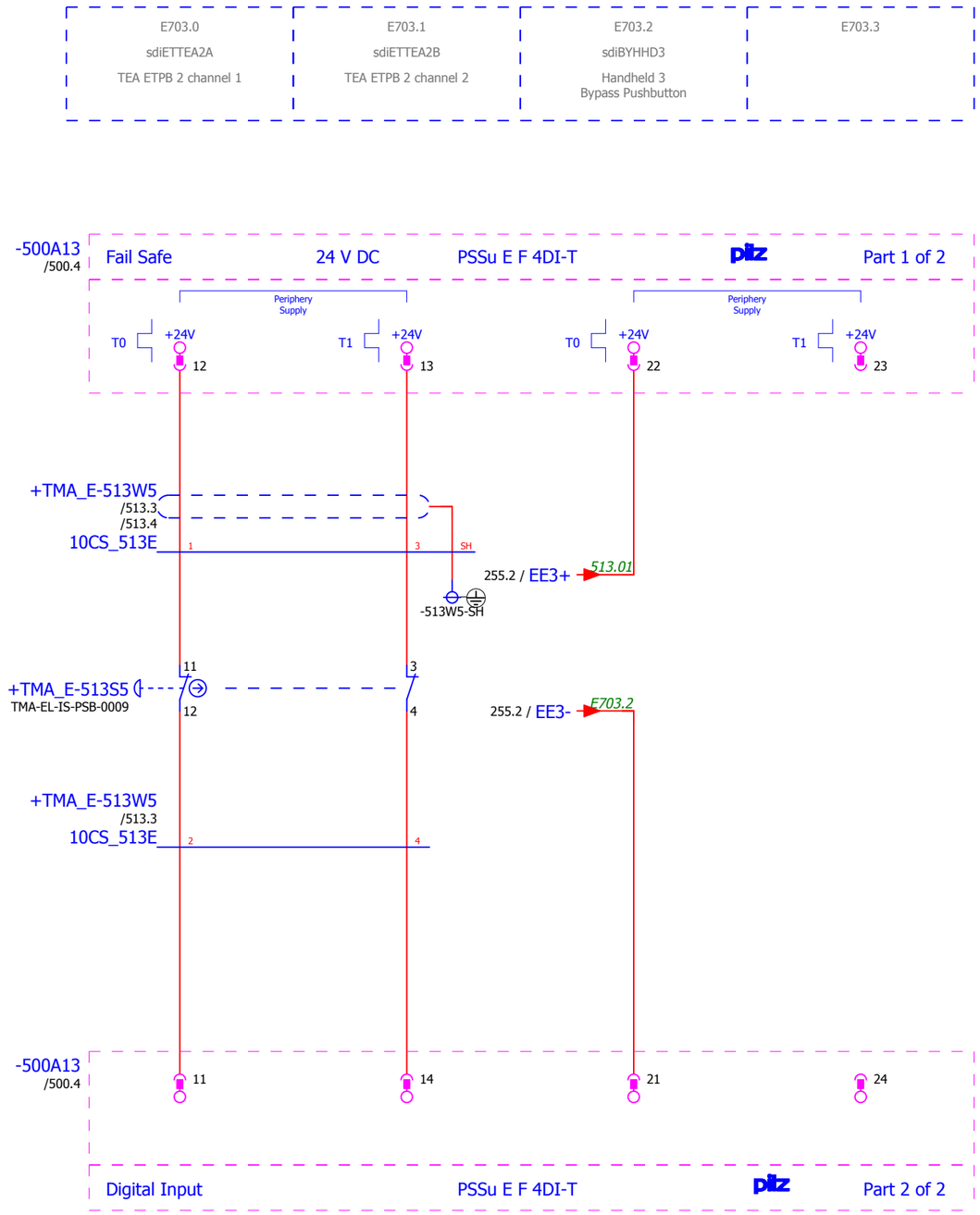

IK4-TEKNIKER
AVDA. OTAOLA 20
20600 Eibar (Gipuzkoa) Spain
Tfno.:(+34) 943 206744
Fax: (+34) 943 202757
Web: www.tekniker.es

Date	15/12/2017						
Reviewed	F.LÓPEZ	2.3	15/12/2017	JOSE MANUEL			
Drew by	JOSE MANUEL	Review	Date	Name	Review	Date	Name

3151_LSST

MCS Design Electrical Schematics

LSST TELESCOPE

Replaces | Replaced by

SAFETY DIGITAL INPUTS

Customer: EMPRESARIOS AGRUPADOS
C/Magallanes, 3
28015 MADRID
91 3098000
http://www.empresariosagrupados.es/

= E1
+ TMA-EL-CS-CBT-0101

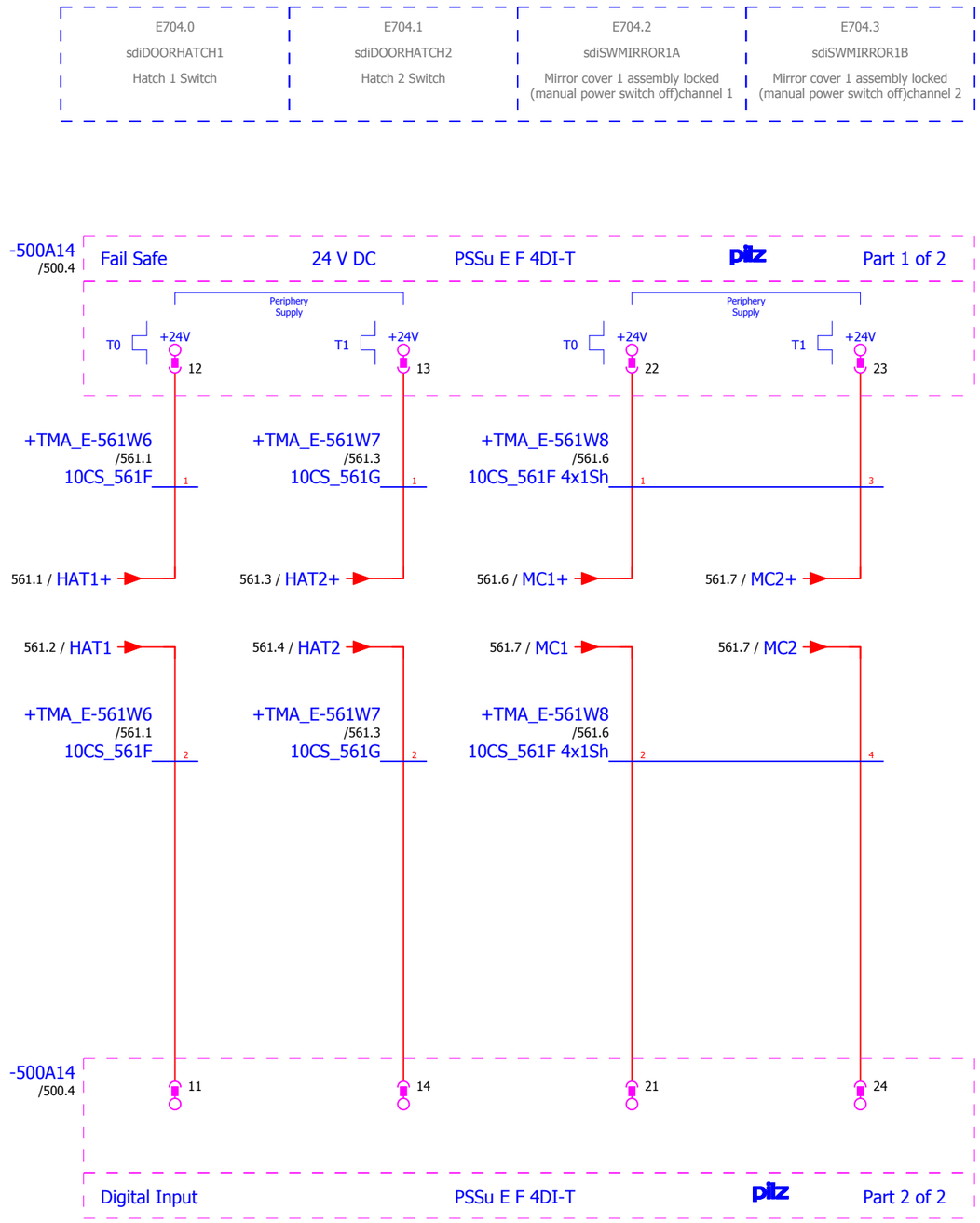

IK4-TEKNIKER
AVDA. OTAOLA 20
20600 Eibar (Gipuzkoa) Spain
Tfno.:(+34) 943 206744
Fax: (+34) 943 202757
Web: www.tekniker.es

Date	15/12/2017						
Reviewed	F.LÓPEZ	2.3	15/12/2017	JOSE MANUEL			
Drew by	JOSE MANUEL	Review	Date	Name	Review	Date	Name

3151_LSST
MCS Design Electrical Schematics
LSST TELESCOPE

Replaces | Replaced by

SAFETY DIGITAL INPUTS

Customer: EMPRESARIOS AGRUPADOS
C/Magallanes, 3
28015 MADRID
91 3098000
http://www.empresariosagrupados.es/

= E1
+ TMA-EL-CS-CBT-0101

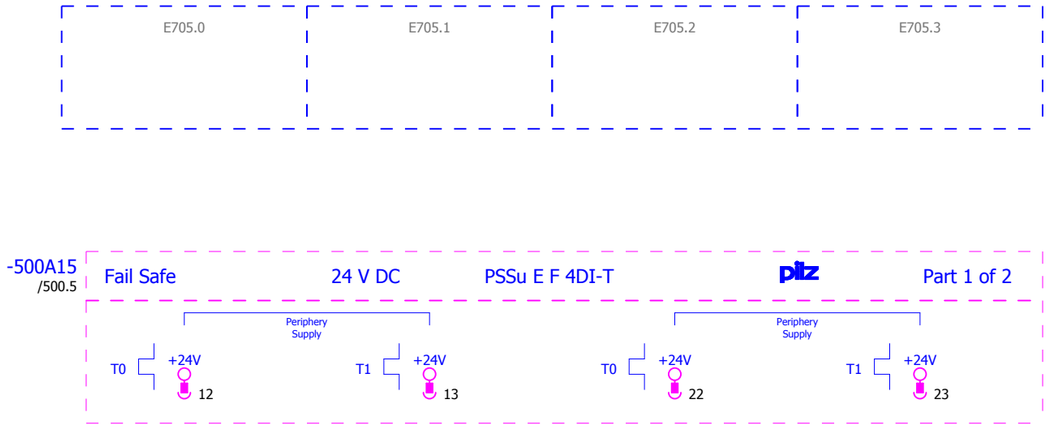

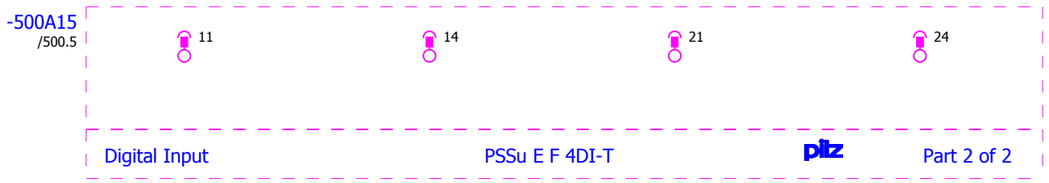

IK4 TEKNIKER Research Alliance
IK4-TEKNIKER
AVDA. OTAOLA 20
20600 Eibar (Gipuzkoa) Spain
Tfno.:(+34) 943 206744
Fax: (+34) 943 202757
Web: www.tekniker.es

Date	26/10/2016						
Reviewed	F.LÓPEZ	2.3	15/12/2017	JOSE MANUEL			
Drew by	jcastano	Review	Date	Name	Review	Date	Name

3151_LSST
MCS Design Electrical Schematics
LSST TELESCOPE
Replaces
Replaced by

SAFETY DIGITAL INPUTS

Customer:
EMPRESARIOS AGRUPADOS
C/Magallanes, 3
28015 MADRID
91 3098000
http://www.empresariosagrupados.es/

= E1
+ TMA-EL-CS-CBT-0101

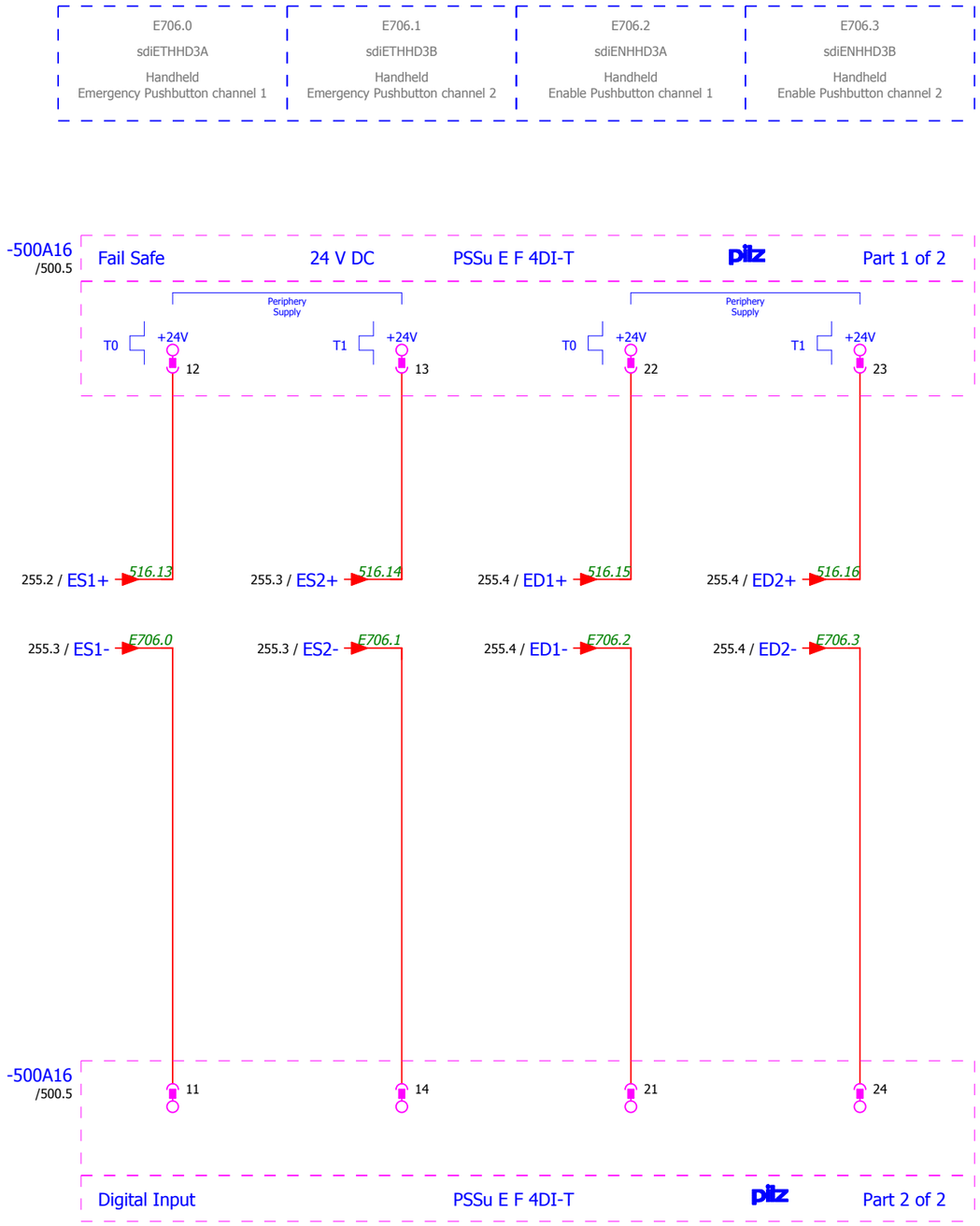

IK4 TEKNIKER Research Alliance

IK4-TEKNIKER
AVDA. OTAOLA 20
20600 Eibar (Gipuzkoa) Spain
Tfno.:(+34) 943 206744
Fax: (+34) 943 202757
Web: www.tekniker.es

Date	14/12/2017						
Reviewed	F.LÓPEZ	2.3	15/12/2017	JOSE MANUEL			
Drew by	JOSE MANUEL	Review	Date	Name	Review	Date	Name

3151_LSST

MCS Design Electrical Schematics

LSST TELESCOPE

Replaces

Replaced by

SAFETY DIGITAL INPUTS

Customer:

EMPRESARIOS AGRUPADOS

C/Magallanes, 3
28015 MADRID
91 3098000

http://www.empresariosagrupados.es/

= E1

+ TMA-EL-CS-CBT-0101

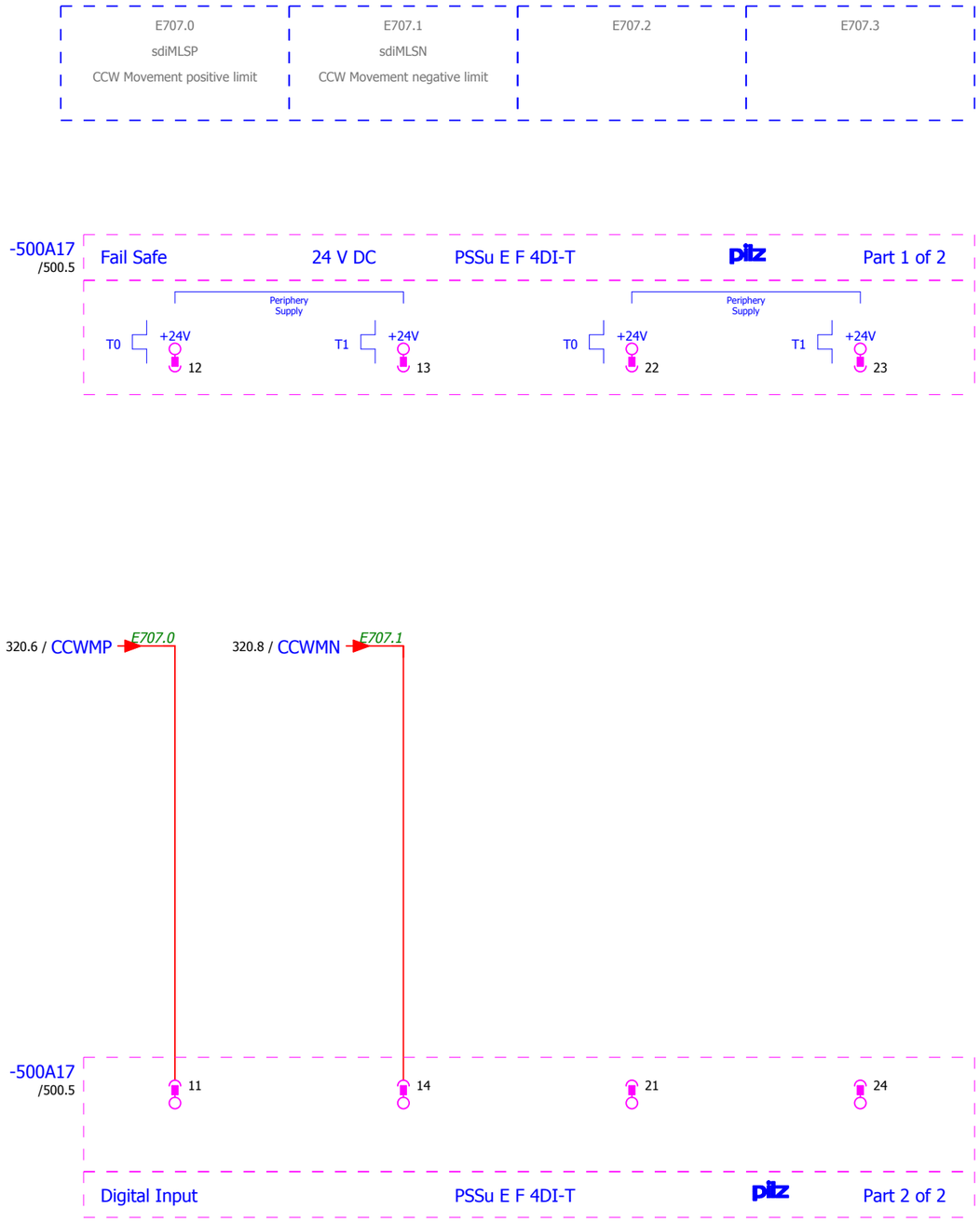

IK4 TEKNIKER Research Alliance

IK4-TEKNIKER
AVDA. OTAOLA 20
20600 Eibar (Gipuzkoa) Spain
Tfno.:(+34) 943 206744
Fax: (+34) 943 202757
Web: www.tekniker.es

Date	15/12/2017						
Reviewed	F.LÓPEZ	2.3	15/12/2017	JOSE MANUEL			
Drew by	JOSE MANUEL	Review	Date	Name	Review	Date	Name

3151_LSST

MCS Design Electrical Schematics

LSST TELESCOPE

Replaces | Replaced by

SAFETY DIGITAL INPUTS

Customer: EMPRESARIOS AGRUPADOS

C/Magallanes, 3
28015 MADRID
91 3098000
http://www.empresariosagrupados.es/

= E1

+ TMA-EL-CS-CBT-0101

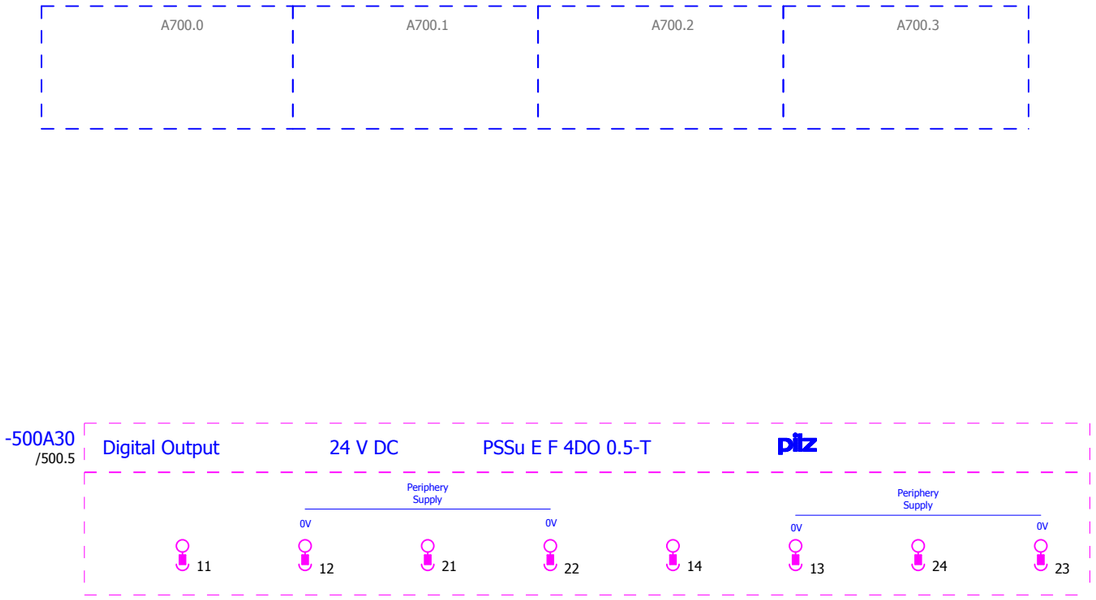

◁ 517

561 ▷

IK4 TEKNIKER Research Alliance
IK4-TEKNIKER
AVDA. OTAOLA 20
20600 Eibar (Gipuzkoa) Spain
Tfno.:(+34) 943 206744
Fax: (+34) 943 202757
Web: www.tekniker.es

Date	23/02/2017						
Reviewed	F.LÓPEZ	2.3	15/12/2017	JOSE MANUEL			
Drew by	jcastano	Review	Date	Name	Review	Date	Name

3151_LSST
MCS Design Electrical Schematics
LSST TELESCOPE

Replaces
Replaced by

SAFETY DIGITAL OUTPUTS

Customer:
EMPRESARIOS AGRUPADOS
C/Magallanes, 3
28015 MADRID
91 3098000
http://www.empresariosagrupados.es/

= E1
+ TMA-EL-CS-CBT-0101

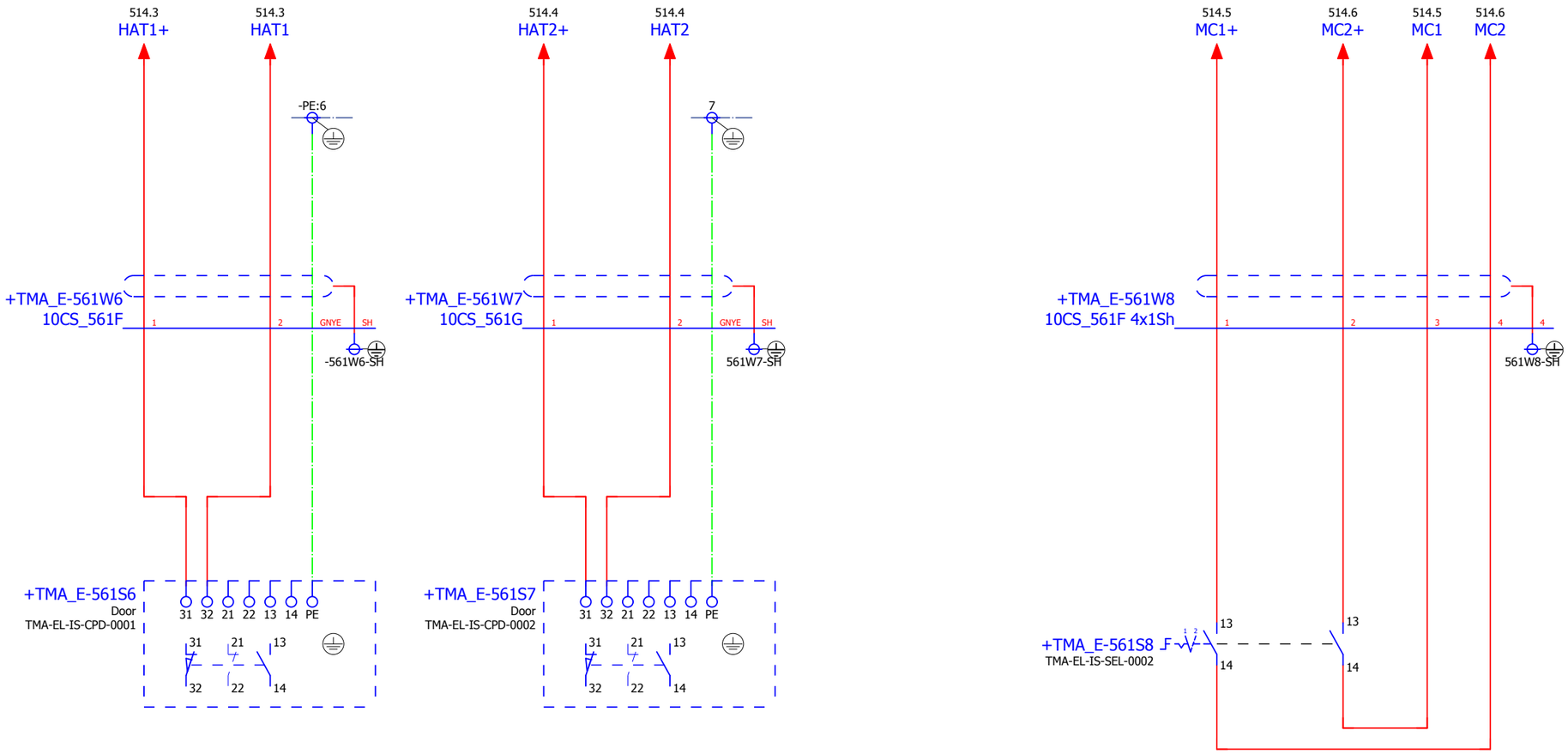

Hatch 1

Hatch 2

Mirror cover 1 assembly locked

IK4 TEKNIKER Research Alliance

IK4-TEKNIKER
AVDA. OTAOLA 20
20600 Eibar (Gipuzkoa) Spain
Tfno.:(+34) 943 206744
Fax: (+34) 943 202757
Web: www.tekniker.es

Date	15/12/2017						
Reviewed	F.LÓPEZ	2.3	15/12/2017	JOSE MANUEL			
Drew by	JOSE MANUEL	Review	Date	Name	Review	Date	Name

3151_LSST

MCS Design Electrical Schematics

LSST TELESCOPE

Replaces | Replaced by

SECURITY Limit Switch

Customer: EMPRESARIOS AGRUPADOS
C/Magallanes, 3
28015 MADRID
91 3098000
http://www.empresariosagrupados.es/

= E1

+ TMA-EL-CS-CBT-0101

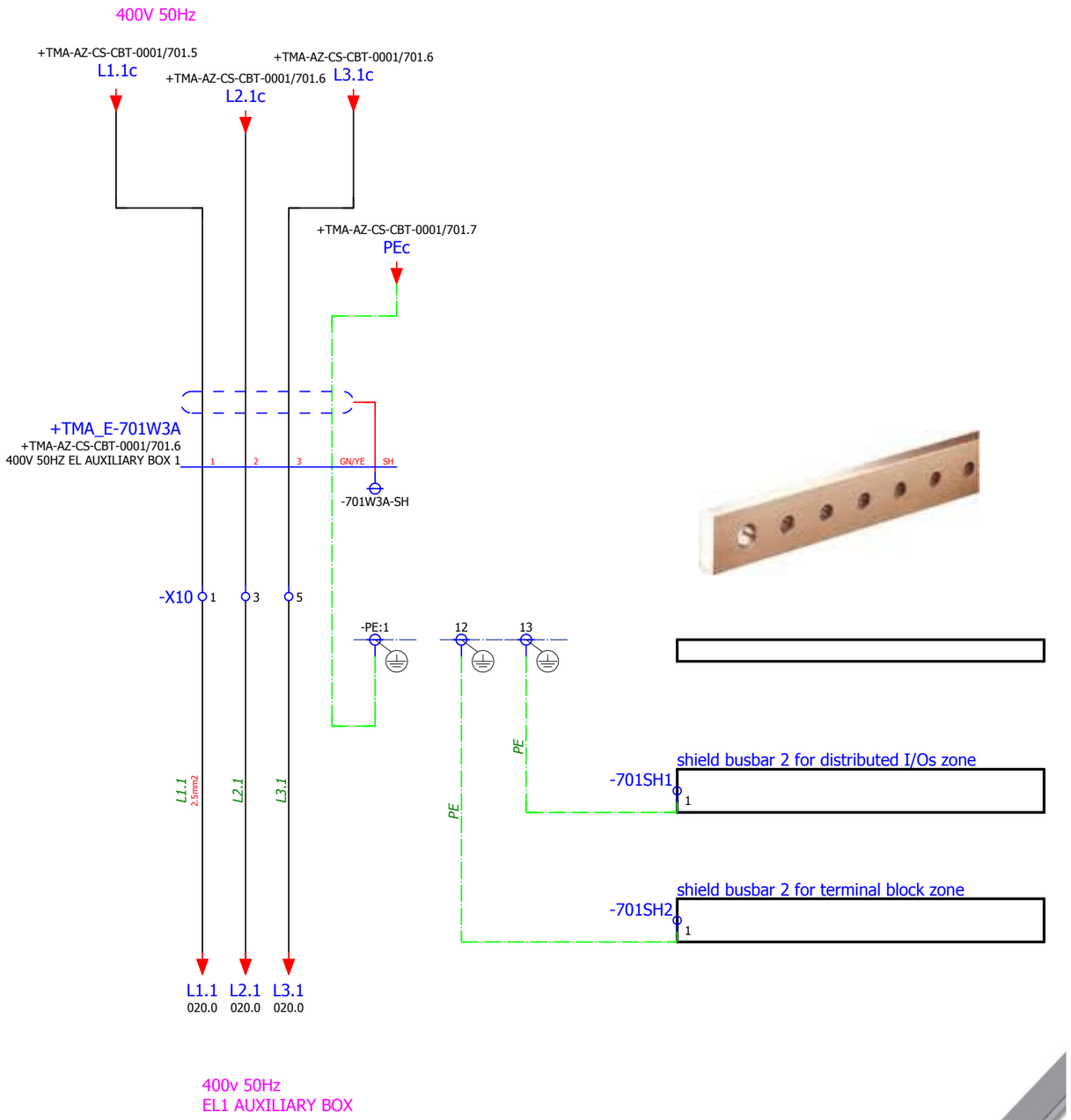

IK4 TEKNIKER Research Alliance

IK4-TEKNIKER
AVDA. OTAOLA 20
20600 Eibar (Gipuzkoa) Spain
Tfno.:(+34) 943 206744
Fax: (+34) 943 202757
Web: www.tekniker.es

Date	15/12/2017						
Reviewed	F.LÓPEZ	2.3	15/12/2017	JOSE MANUEL			
Drew by	JOSE MANUEL	Review	Date	Name	Review	Date	Name

3151_LSST

MCS Design Electrical Schematics

LSST TELESCOPE

Replaces | Replaced by

POWER SUPPLY FROM MAIN CONTROL CABINET

Customer: EMPRESARIOS AGRUPADOS
C/Magallanes, 3
28015 MADRID
91 3098000
http://www.empresariosagrupados.es/

= E1

+ TMA-EL-CS-CBT-0101

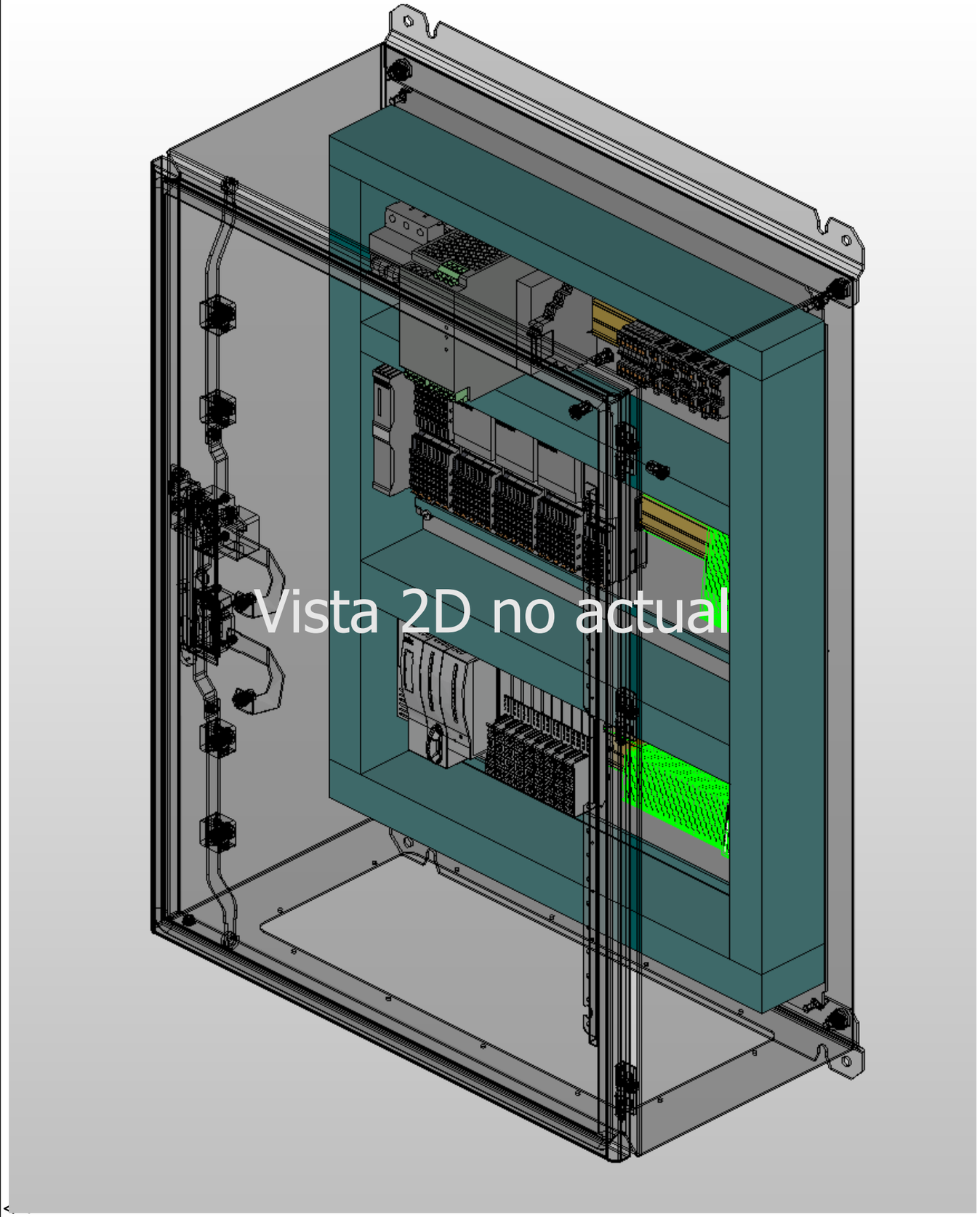

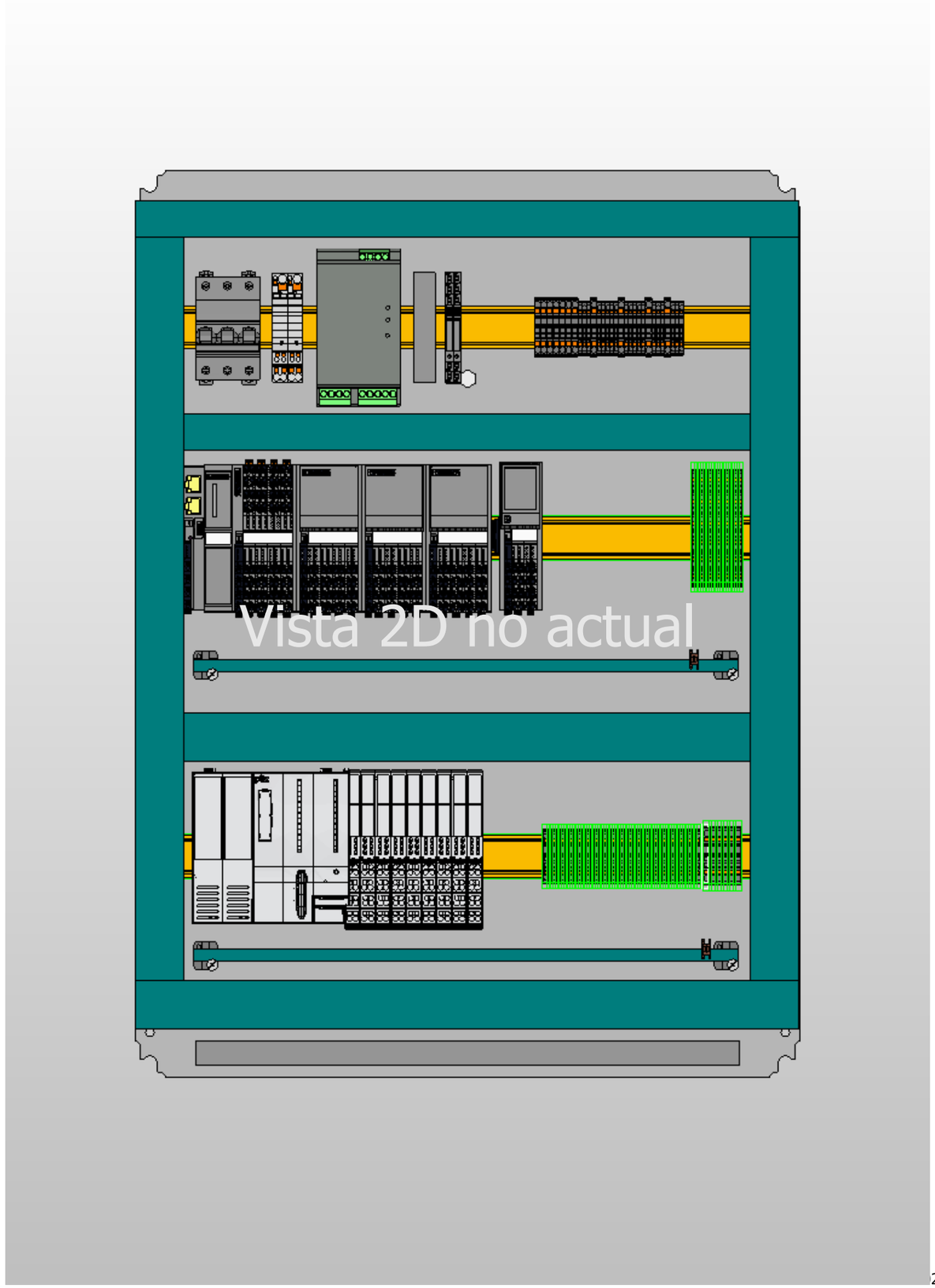

IK4-TEKNIKER
AVDA. OTAOLA 20
20600 Eibar (Gipuzkoa) Spain
Tfno.:(+34) 943 206744
Fax: (+34) 943 202757
Web: www.tekniker.es

Date	20/03/2017						
Reviewed	F.LÓPEZ	2.3	15/12/2017	JOSE MANUEL			
Drew by	jcastano	Review	Date	Name	Review	Date	Name

3151_LSST

MCS Design Electrical Schematics

LSST TELESCOPE

Replaces | Replaced by

BOX VIEW

Customer: EMPRESARIOS AGRUPADOS
C/Magallanes, 3
28015 MADRID
91 3098000
http://www.empresariosagrupados.es/

= E1
+ TMA-EL-CS-CBT-0101

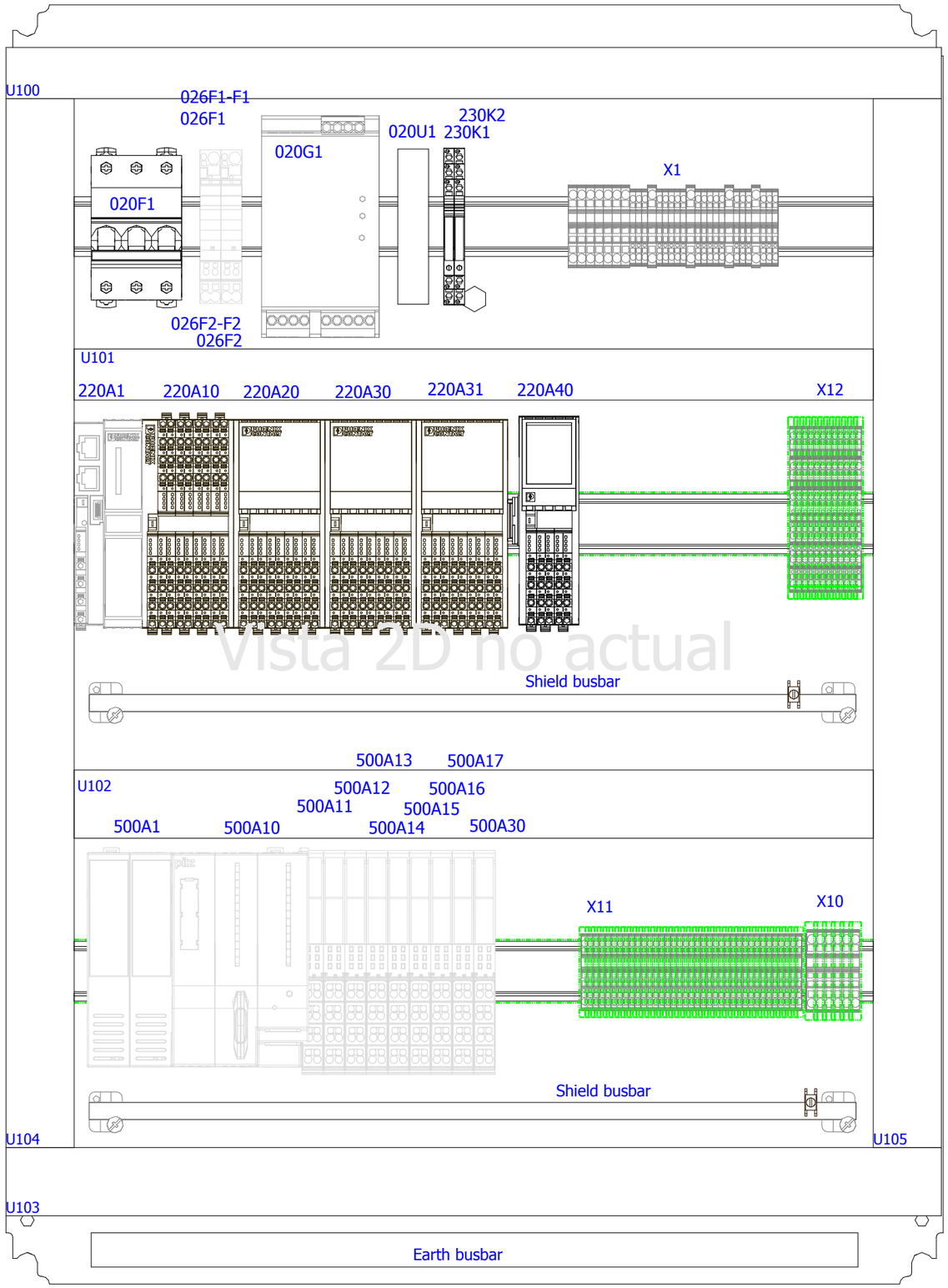

IK4 TEKNIKER Research Alliance

IK4-TEKNIKER
AVDA. OTAOLA 20
20600 Eibar (Gipuzkoa) Spain
Tfno.:(+34) 943 206744
Fax: (+34) 943 202757
Web: www.tekniker.es

Date	20/03/2017						
Reviewed	F.LÓPEZ	2.3	15/12/2017	JOSE MANUEL			
Drew by	jcastano	Review	Date	Name	Review	Date	Name

3151_LSST

MCS Design Electrical Schematics

LSST TELESCOPE

Replaces | Replaced by

Mounting Plate

Customer: EMPRESARIOS AGRUPADOS

C/Magallanes, 3
28015 MADRID
91 3098000
http://www.empresariosagrupados.es/

= E1

+ TMA-EL-CS-CBT-0101

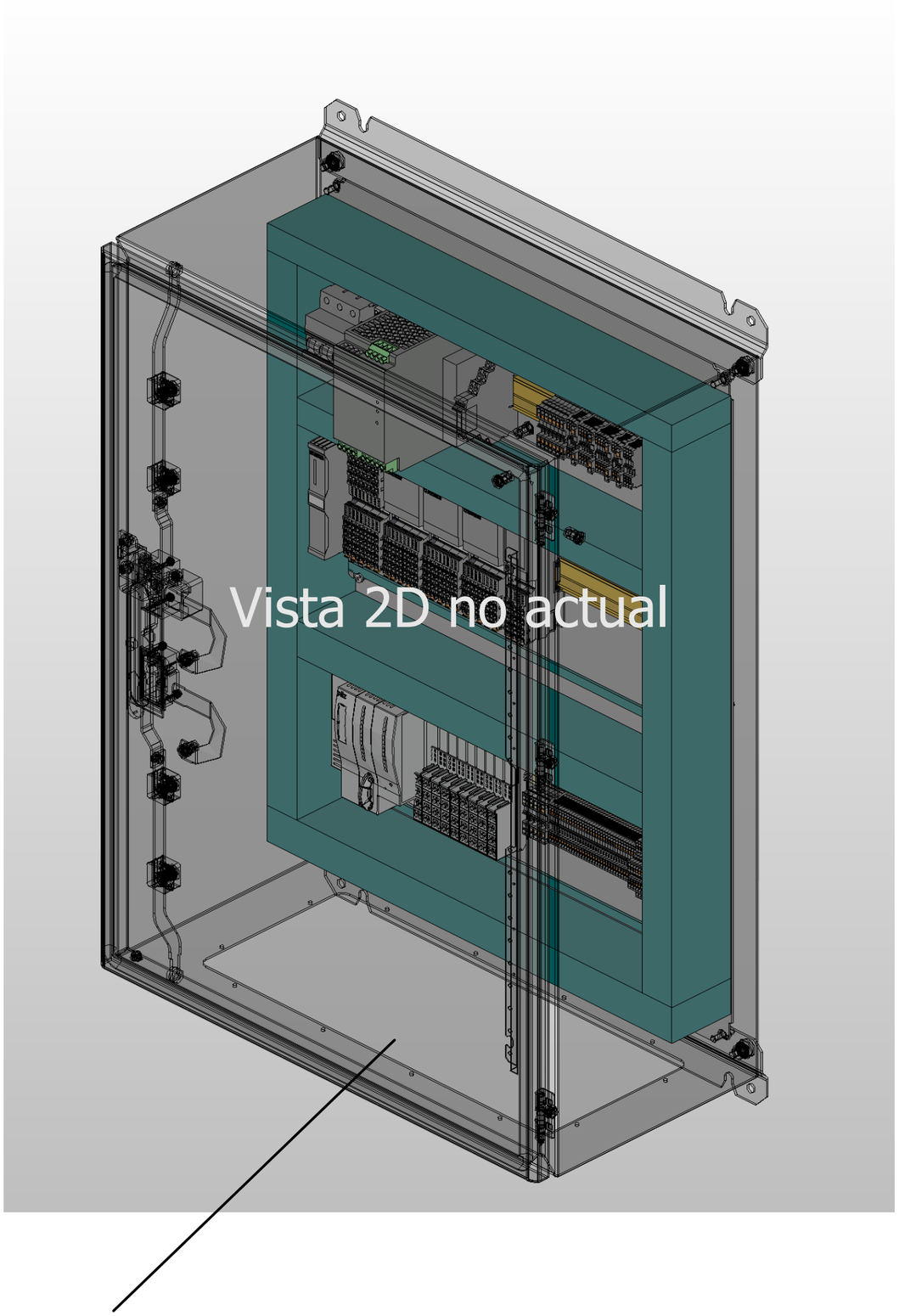

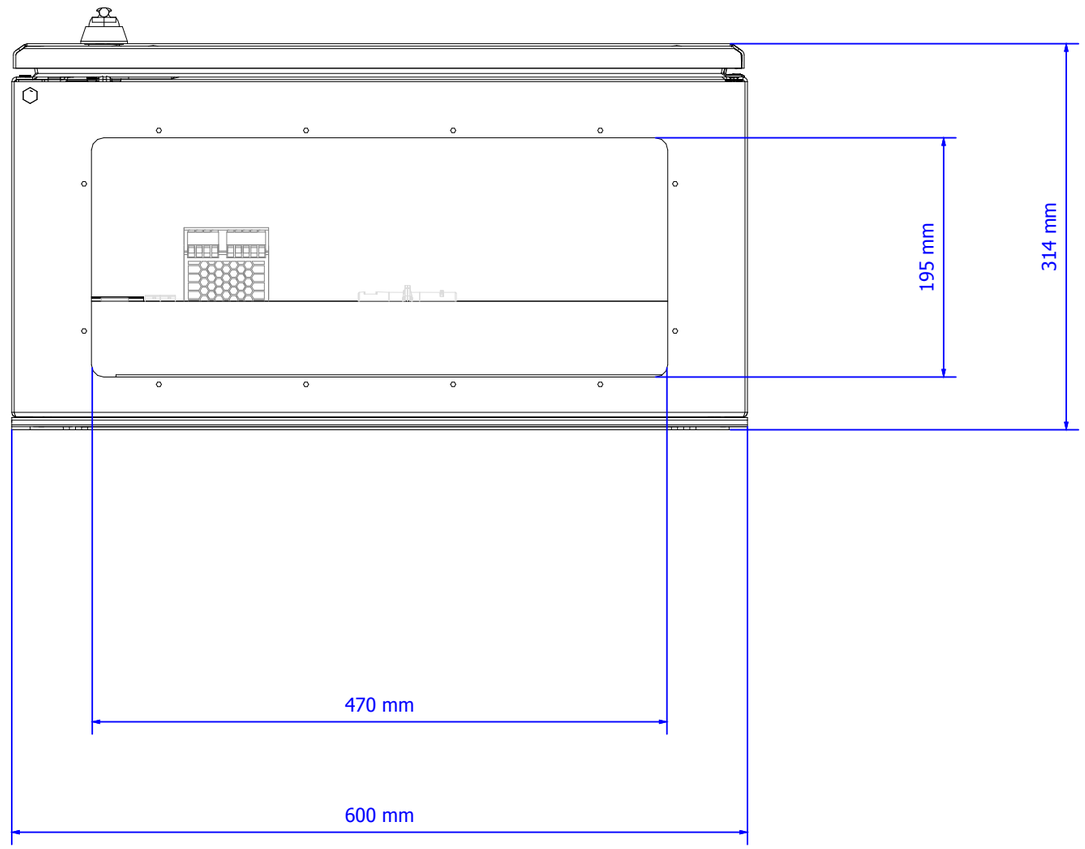

◁ 802

804 ▷

IK4 TEKNIKER Research Alliance
IK4-TEKNIKER
AVDA. OTAOLA 20
20600 Eibar (Gipuzkoa) Spain
Tfno.:(+34) 943 206744
Fax: (+34) 943 202757
Web: www.tekniker.es

Date	20/01/2017							
Reviewed	F.LÓPEZ	2.3	15/12/2017	JOSE MANUEL				
Drew by	jcastano	Review	Date	Name	Review	Date	Name	

3151_LSST
MCS Design Electrical Schematics
LSST TELESCOPE

Replaces | Replaced by

CABLE ENTRANCE DIMENSIONS

Customer: EMPRESARIOS AGRUPADOS
C/Magallanes, 3
28015 MADRID
91 3098000
http://www.empresariosagrupados.es/

= E1
+ TMA-EL-CS-CBT-0101

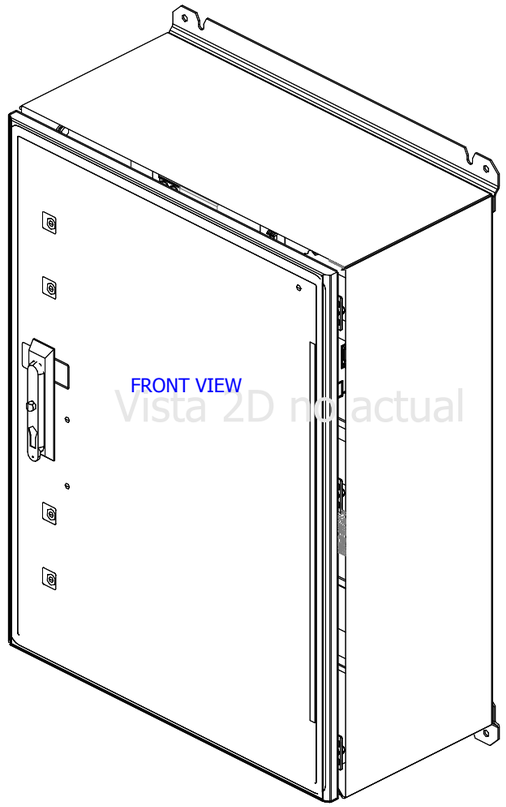

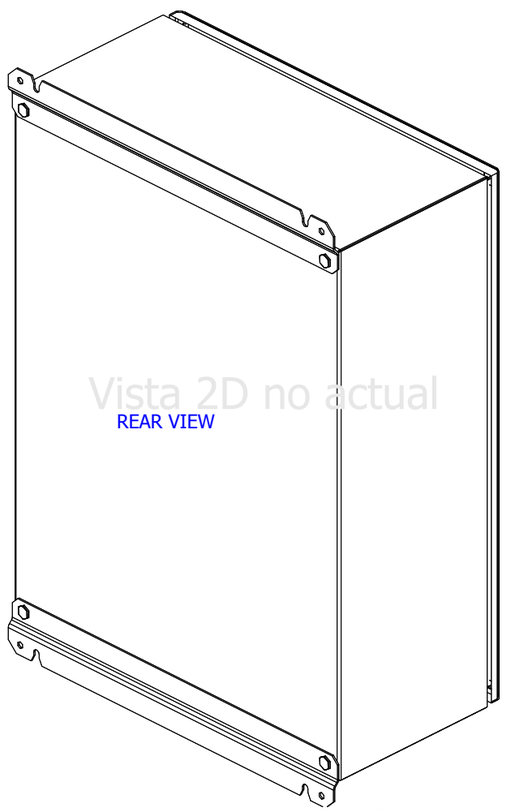

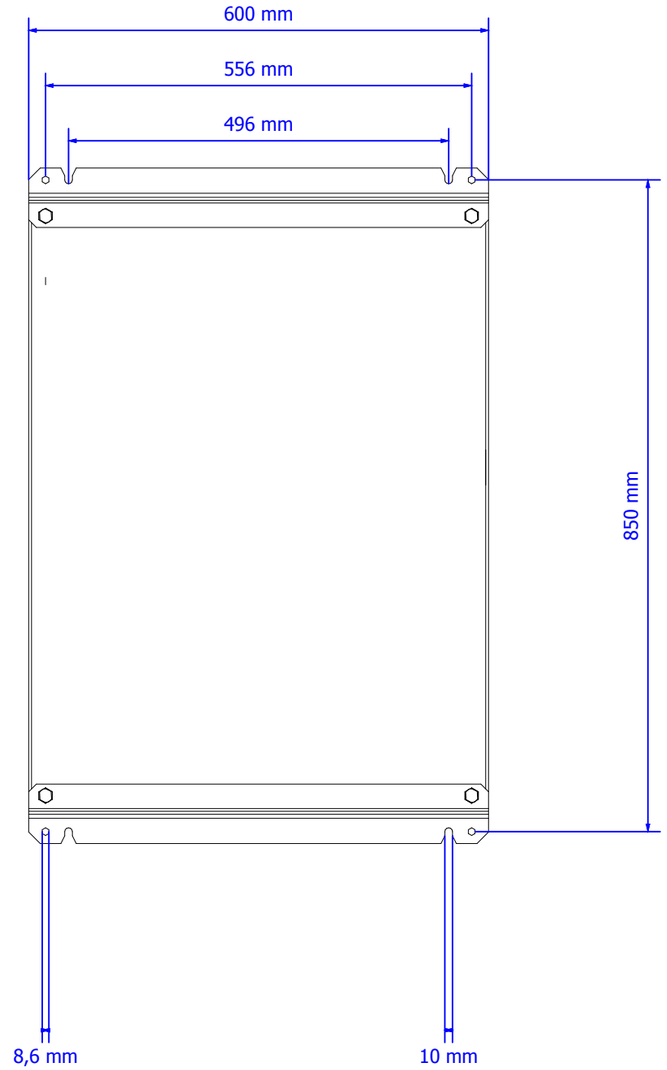

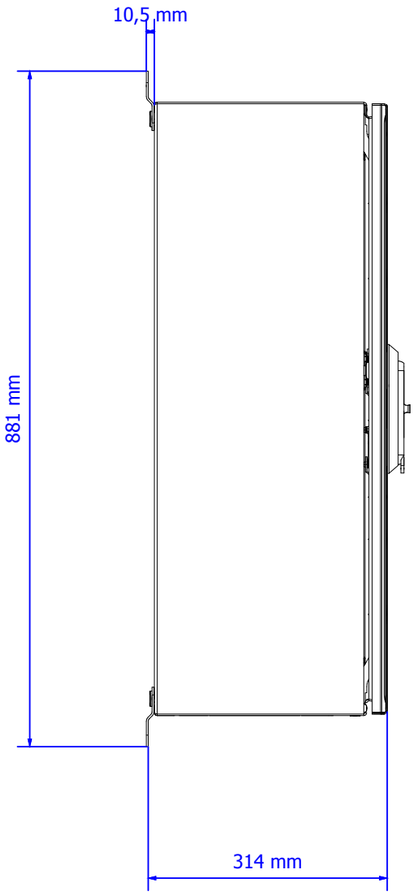

IK4 TEKNIKER Research Alliance

IK4-TEKNIKER
AVDA. OTAOLA 20
20600 Eibar (Gipuzkoa) Spain
Tfno.:(+34) 943 206744
Fax: (+34) 943 202757
Web: www.tekniker.es

Date	20/01/2017						
Reviewed	F.LÓPEZ	2.3	15/12/2017	JOSE MANUEL			
Drew by	jcastano	Review	Date	Name	Review	Date	Name

3151_LSST

MCS Design Electrical Schematics

LSST TELESCOPE

Replaces | Replaced by

CABINET DIMENSIONS

Customer: EMPRESARIOS AGRUPADOS
C/Magallanes, 3
28015 MADRID
91 3098000
http://www.empresariosagrupados.es/

= E1

+ TMA-EL-CS-CBT-0101

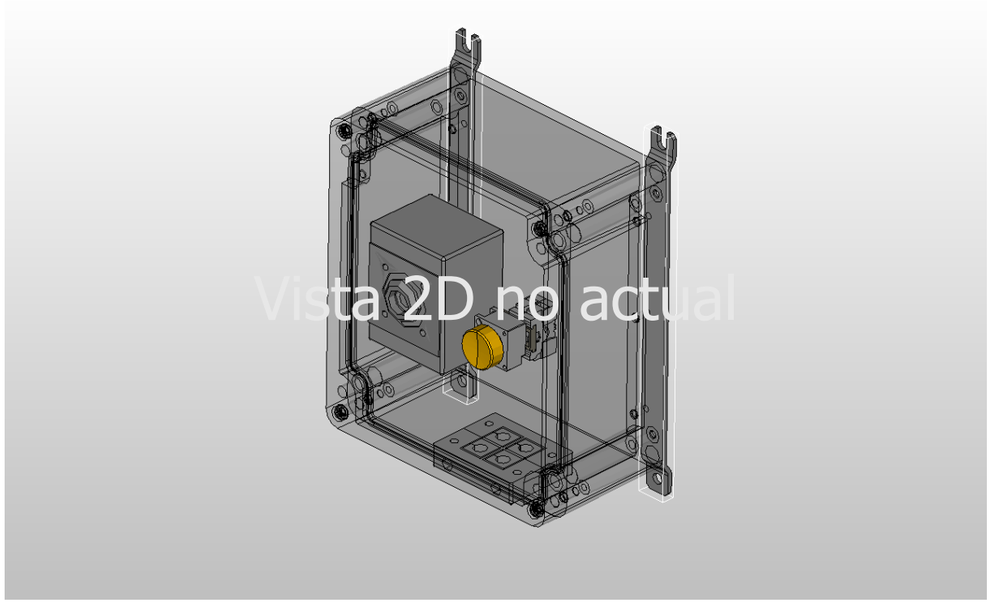

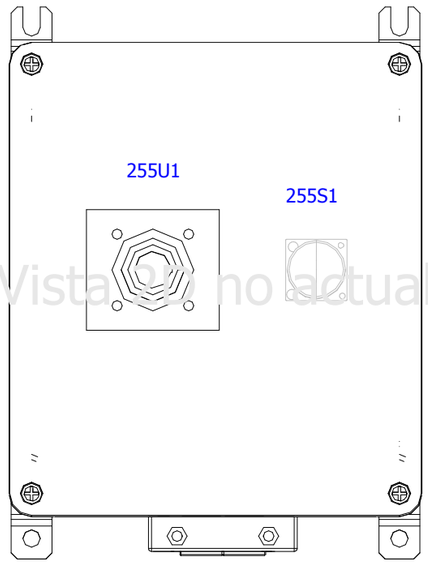

IK4 TEKNIKER Research Alliance

IK4-TEKNIKER
AVDA. OTAOLA 20
20600 Eibar (Gipuzkoa) Spain
Tfno.:(+34) 943 206744
Fax: (+34) 943 202757
Web: www.tekniker.es

Date	15/12/2017						
Reviewed	F.LÓPEZ	2.3	15/12/2017	JOSE MANUEL			
Drew by	JOSE MANUEL	Review	Date	Name	Review	Date	Name

3151_LSST

MCS Design Electrical Schematics

LSST TELESCOPE

Replaces | Replaced by

HANDHELD EL +X

Customer:

EMPRESARIOS AGRUPADOS
C/Magallanes, 3
28015 MADRID
91 3098000
http://www.empresariosagrupados.es/

= E1

+ TMA-EL-CS-CBT-0101

Customer

EMPRESARIOS AGRUPADOS

EMPRESARIOS AGRUPADOS

C/Magallanes, 3
28015 MADRID
ESPAÑA
91 3098000

http://www.empresariosagrupados.es/

Project:

3151_LSST

MCS Design Electrical Schematics

LSST TELESCOPE

E1
TMA

TMA-EL-CS-CBT-0102
AUXILIARY ELEVATION 2 BOX (-X)

Number of pages: 710

Made by:

IK4-TEKNIKER
AVDA. OTAOLA 20
20600 Eibar (Gipuzkoa) Spain
Tfno. : (+34) 943 206744
Fax : (+34) 943 202757
Web: www.tekniker.es

2.3	VERSION INTERMEDIA PARA MONTAJE ASTURFEITO (SIN EVALUACIONES)	15/12/2017	JOSE MANUEL
Review	Review description	Date	Reviewed

Drew by:	J.M.CASTAÑO
Reviewed:	F.LÓPEZ
Date:	16/12/2015
Replaces:	
Replaced by:	

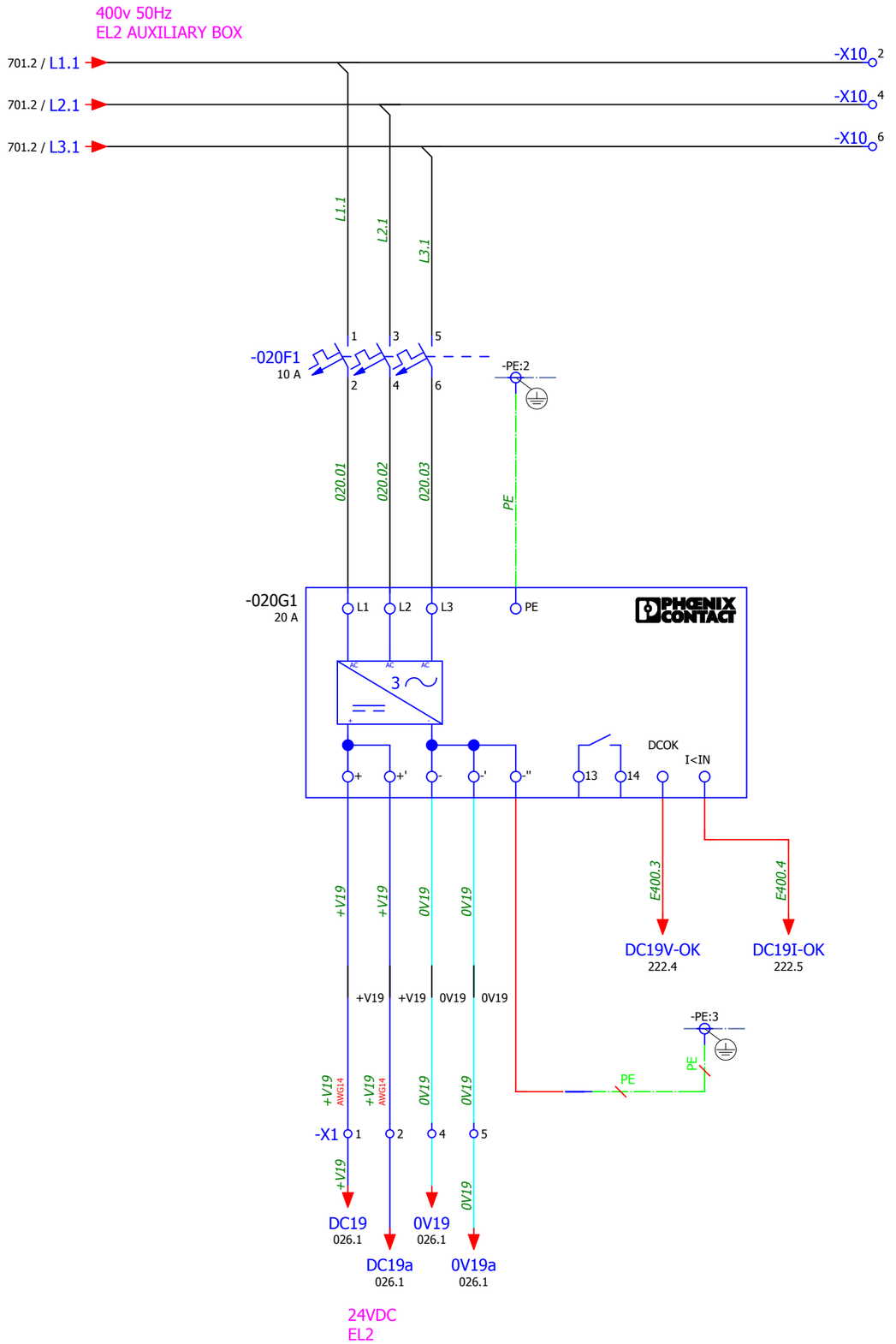

-X11 = FIELD terminal block

-X10 = POWER terminal block

-X1 = distribution terminal block

-X12 = 4-20mA SENSORS

◁ 001

026 ▷

IK4 TEKNIKER Research Alliance	IK4-TEKNIKER AVDA. OTAOLA 20 20600 Eibar (Gipuzkoa) Spain Tfno.:(+34) 943 206744 Fax: (+34) 943 202757 Web: www.tekniker.es								3151_LSST	MCS Design Electrical Schematics LSST TELESCOPE	DC POWER	Customer: EMPRESARIOS AGRUPADOS C/Magallanes, 3 28015 MADRID 91 3098000 http://www.empresariosagrupados.es/	= E1 + TMA-EL-CS-CBT-0102
		Date	14/12/2017										
		Reviewed	F.LÓPEZ	2.3	15/12/2017	JOSE MANUEL							
		Drew by	JOSE MANUEL	Review	Date	Name	Review	Date	Name	Replaces	Replaced by		Page 020 Total number 710

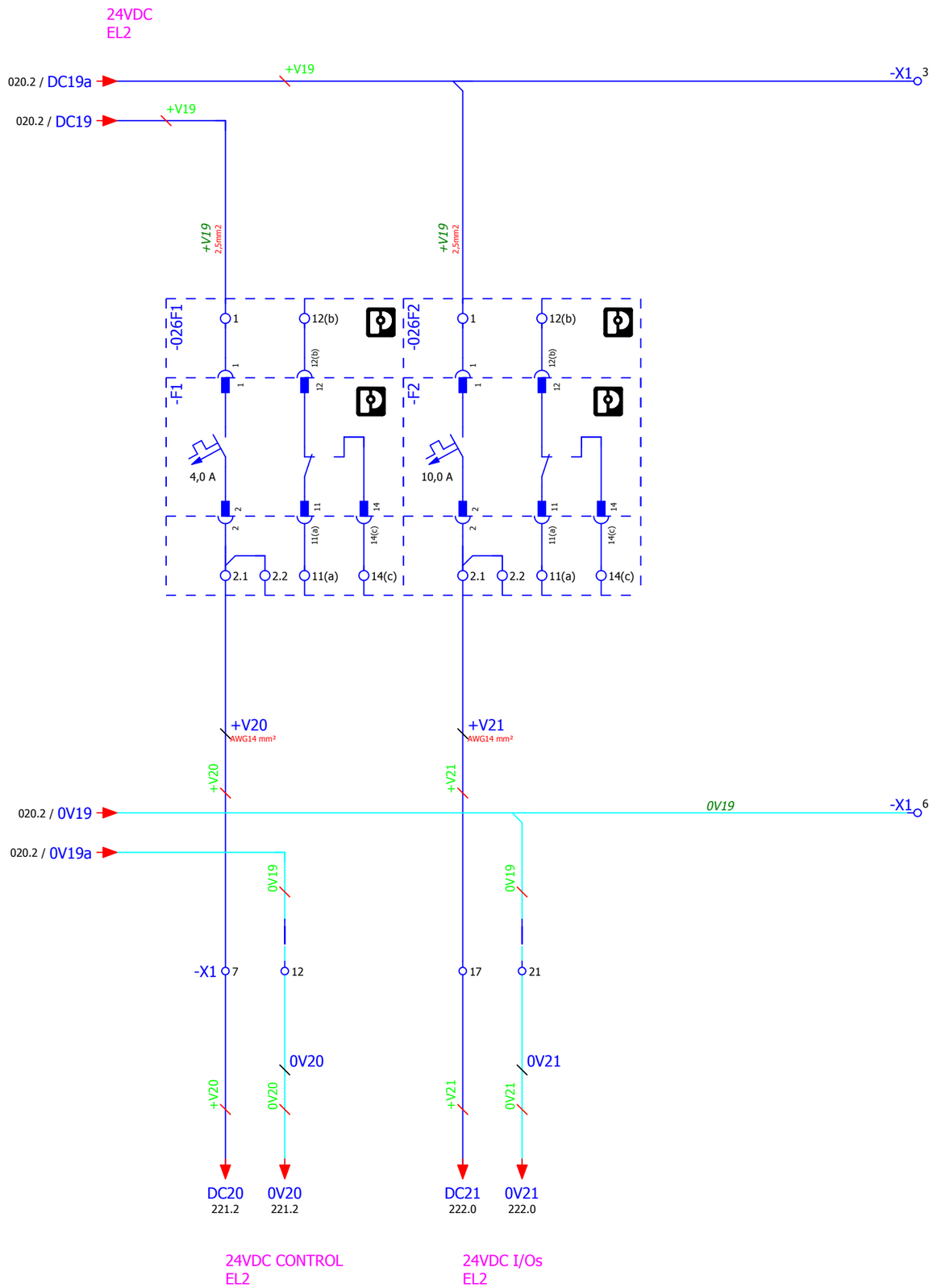

◁ 020

220 ▷

IK4-TEKNIKER
AVDA. OTAOLA 20
20600 Eibar (Gipuzkoa) Spain
Tfno.:(+34) 943 206744
Fax: (+34) 943 202757
Web: www.tekniker.es

Date	14/12/2017						
Reviewed	F.LÓPEZ	2.3	15/12/2017	JOSE MANUEL			
Drew by	JOSE MANUEL	Review	Date	Name	Review	Date	Name

3151_LSST

MCS Design Electrical Schematics

LSST TELESCOPE

Replaces | Replaced by

24 VDC DISTRIBUTION

Customer: EMPRESARIOS AGRUPADOS

C/Magallanes, 3
28015 MADRID
91 3098000
http://www.empresariosagrupados.es/

= E1

+ TMA-EL-CS-CBT-0102

-220A1

/221.2
+TMA-AZ-CS-CBT-0001/208.7

-220A10

/222.0
/223.1

-220A20

/230.1

-220A30

/233.0

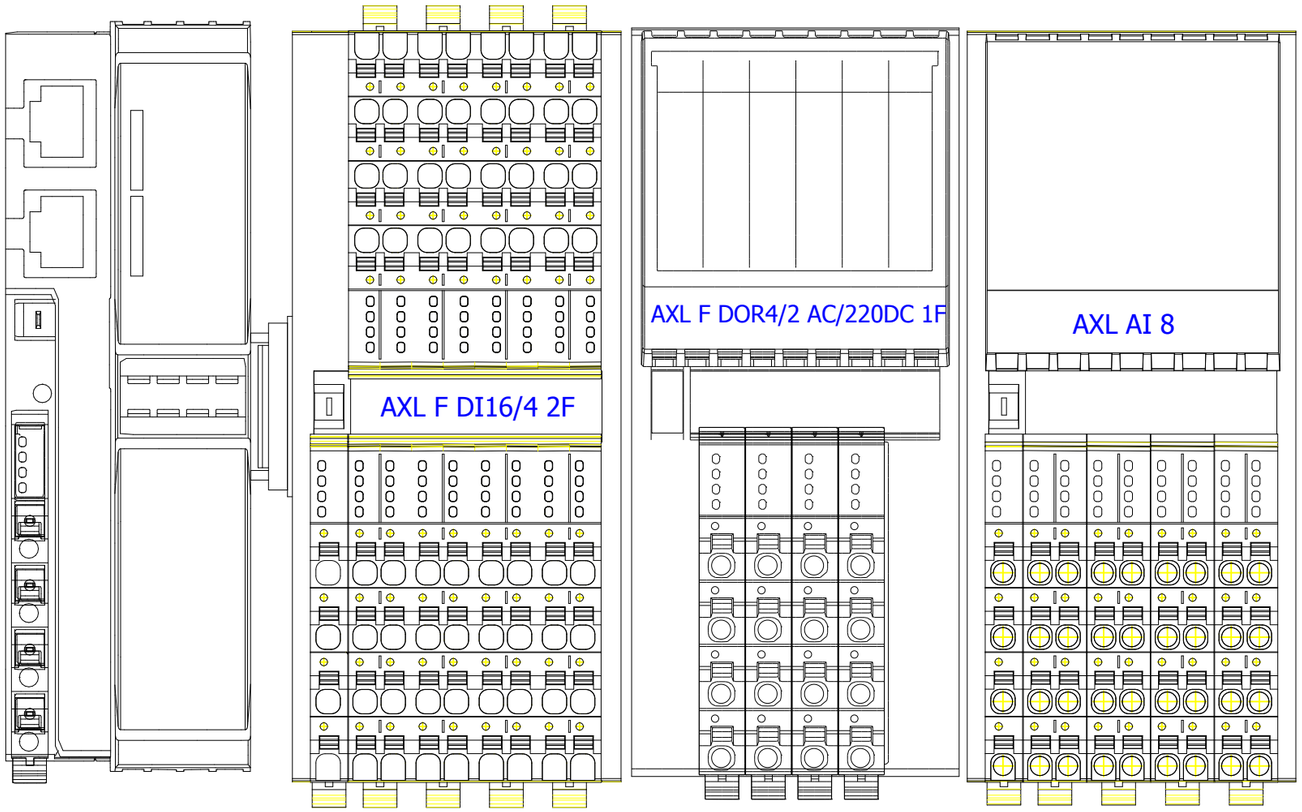

AXL F BK EC

IK4 TEKNIKER Research Alliance
IK4-TEKNIKER
AVDA. OTAOLA 20
20600 Eibar (Gipuzkoa) Spain
Tfno.:(+34) 943 206744
Fax: (+34) 943 202757
Web: www.tekniker.es

Date	23/02/2017						
Reviewed	F.LÓPEZ	2.3	15/12/2017	JOSE MANUEL			
Drew by	jcastano	Review	Date	Name	Review	Date	Name

3151_LSST
MCS Design Electrical Schematics
LSST TELESCOPE

Replaces | Replaced by

DISTRIBUTED IOs

Customer: EMPRESARIOS AGRUPADOS
C/Magallanes, 3
28015 MADRID
91 3098000
http://www.empresariosagrupados.es/

= E1
+ TMA-EL-CS-CBT-0102

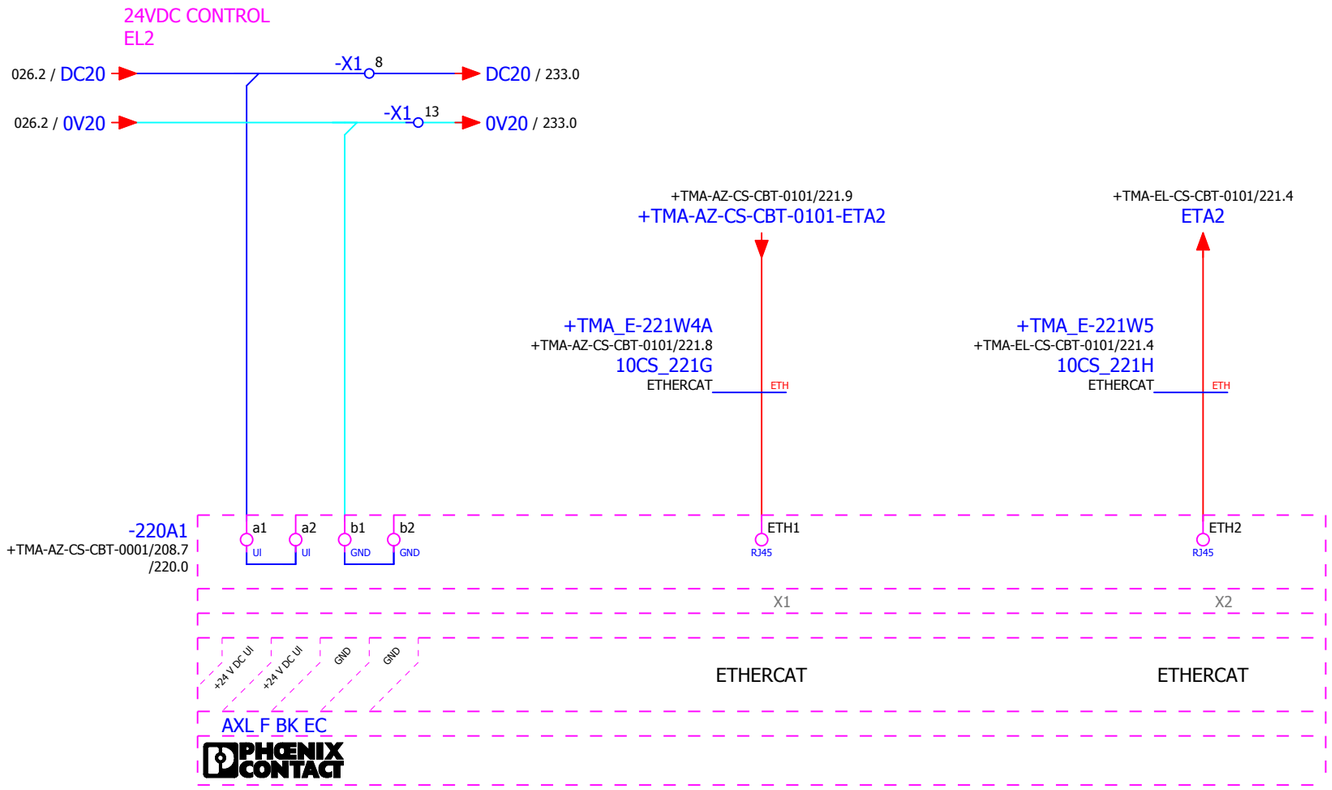

IK4 TEKNIKER Research Alliance

IK4-TEKNIKER
AVDA. OTAOLA 20
20600 Eibar (Gipuzkoa) Spain
Tfno.:(+34) 943 206744
Fax: (+34) 943 202757
Web: www.tekniker.es

Date	15/12/2017						
Reviewed	F.LÓPEZ	2.3	15/12/2017	JOSE MANUEL			
Drew by	JOSE MANUEL	Review	Date	Name	Review	Date	Name

3151_LSST

MCS Design Electrical Schematics

LSST TELESCOPE

Replaces | Replaced by

DISTRIBUTED IOs POWER & ETHERCAT

Customer:

EMPRESARIOS AGRUPADOS

C/Magallanes, 3
28015 MADRID
91 3098000

http://www.empresariosagrupados.es/

= E1

+ TMA-EL-CS-CBT-0102

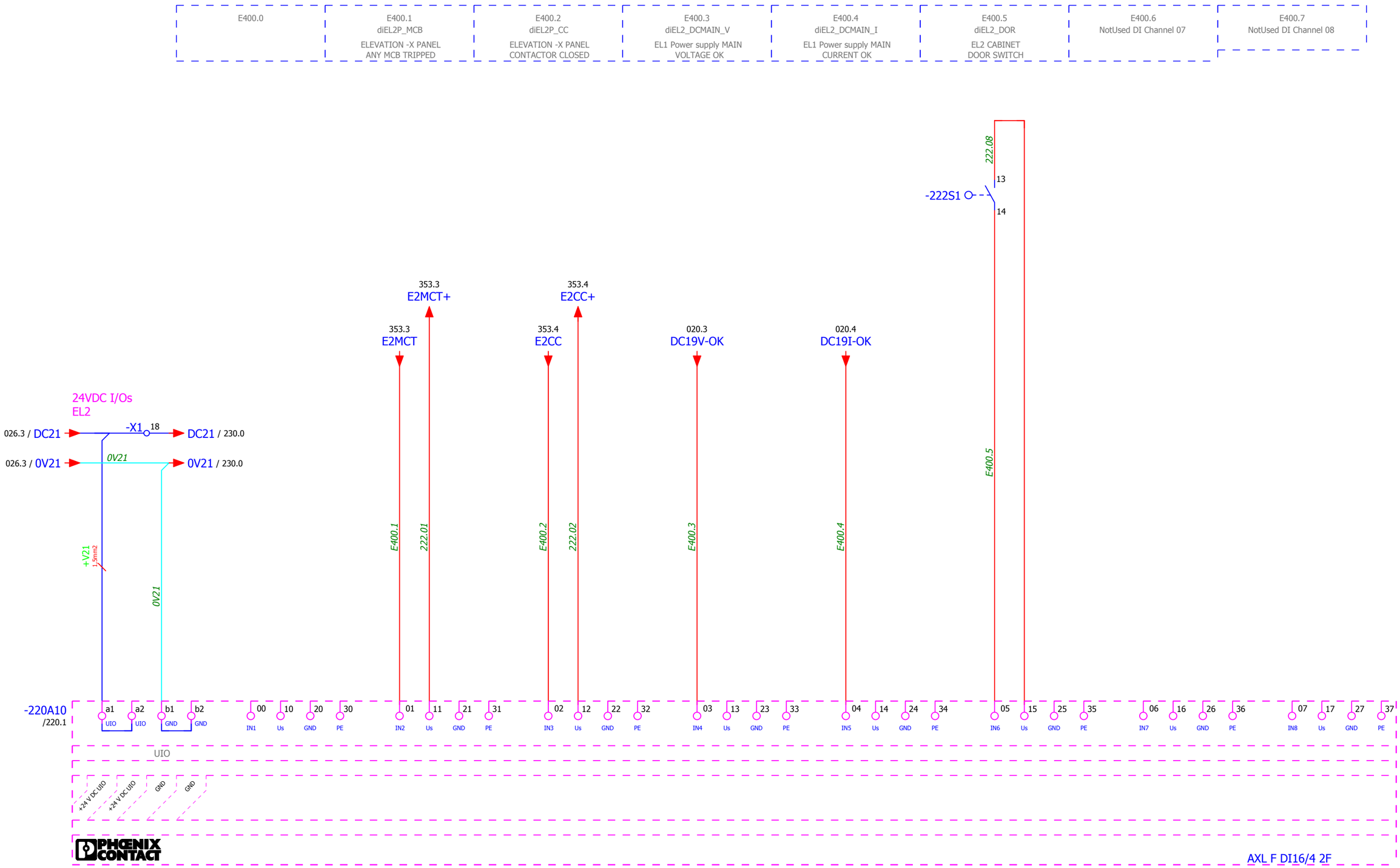

IK4 TEKNIKER Research Alliance
IK4-TEKNIKER
AVDA. OTAOLA 20
20600 Eibar (Gipuzkoa) Spain
Tfno.:(+34) 943 206744
Fax: (+34) 943 202757
Web: www.tekniker.es

Date	14/12/2017						
Reviewed	F.LÓPEZ	2.3	15/12/2017	JOSE MANUEL			
Drew by	JOSE MANUEL	Review	Date	Name	Review	Date	Name

3151_LSST

MCS Design Electrical Schematics

LSST TELESCOPE

Replaces | Replaced by

DISTRIBUTED DIGITAL INPUT MODULE

Customer: EMPRESARIOS AGRUPADOS
C/Magallanes, 3
28015 MADRID
91 3098000
http://www.empresariosagrupados.es/

= E1

+ TMA-EL-CS-CBT-0102

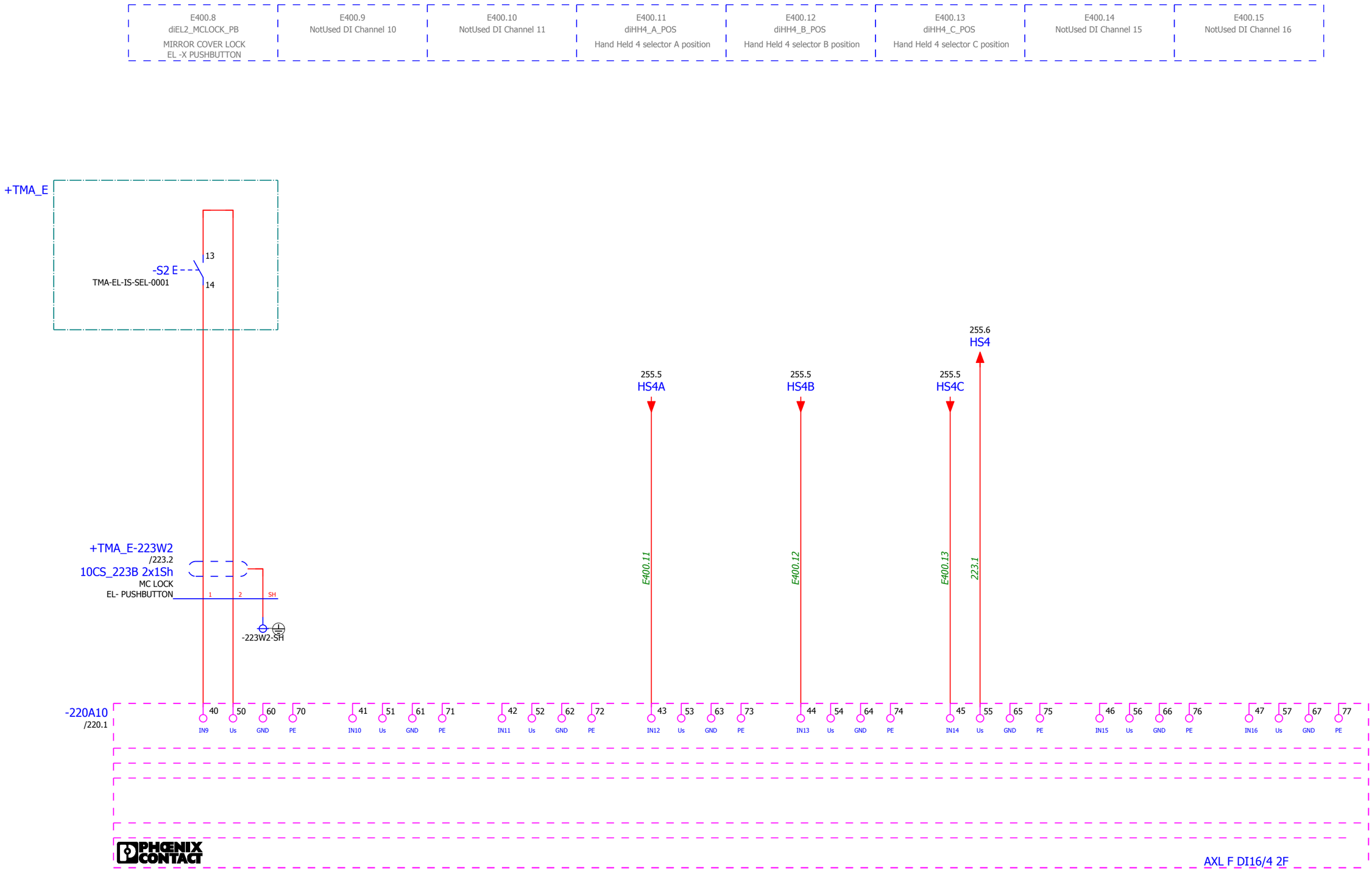

IK4 TEKNIKER Research Alliance

IK4-TEKNIKER
AVDA. OTAOLA 20
20600 Eibar (Gipuzkoa) Spain
Tfno.:(+34) 943 206744
Fax: (+34) 943 202757
Web: www.tekniker.es

Date	15/12/2017						
Reviewed	F.LÓPEZ	2.3	15/12/2017	JOSE MANUEL			
Drew by	JOSE MANUEL	Review	Date	Name	Review	Date	Name

3151_LSST

MCS Design Electrical Schematics

LSST TELESCOPE

Replaces | Replaced by

DISTRIBUTED DIGITAL INPUT MODULE

Customer: EMPRESARIOS AGRUPADOS

C/Magallanes, 3
28015 MADRID
91 3098000
http://www.empresariosagrupados.es/

= E1

+ TMA-EL-CS-CBT-0102

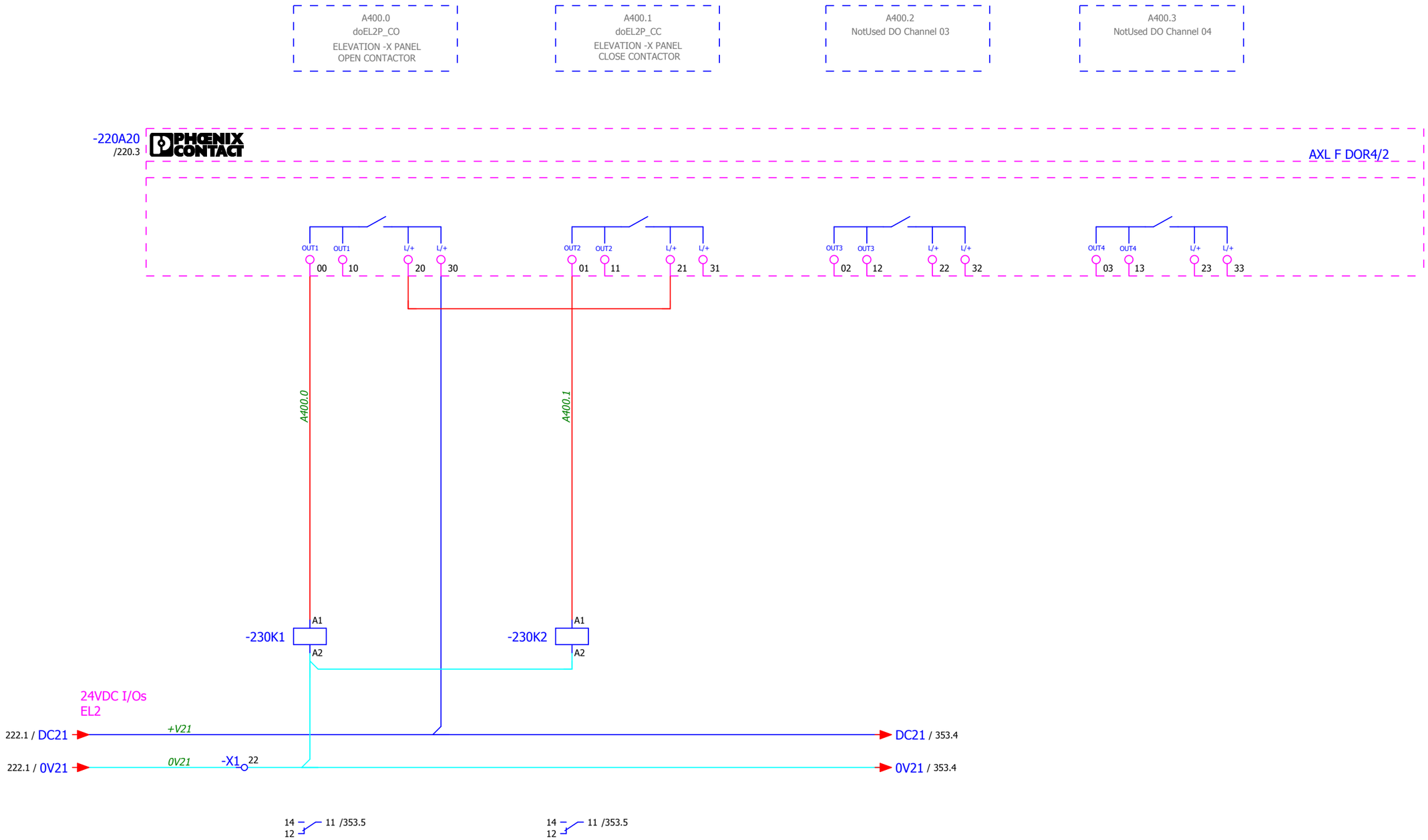

IK4 TEKNIKER Research Alliance

IK4-TEKNIKER
AVDA. OTAOLA 20
20600 Eibar (Gipuzkoa) Spain
Tfno.:(+34) 943 206744
Fax: (+34) 943 202757
Web: www.tekniker.es

Date	14/12/2017						
Reviewed	F.LÓPEZ	2.3	15/12/2017	JOSE MANUEL			
Drew by	JOSE MANUEL	Review	Date	Name	Review	Date	Name

3151_LSST

MCS Design Electrical Schematics

LSST TELESCOPE

Replaces | Replaced by

DISTRIBUTED DIGITAL OUTPUT MODULE

Customer: EMPRESARIOS AGRUPADOS

C/Magallanes, 3
28015 MADRID
91 3098000
http://www.empresariosagrupados.es/

= E1

+ TMA-EL-CS-CBT-0102

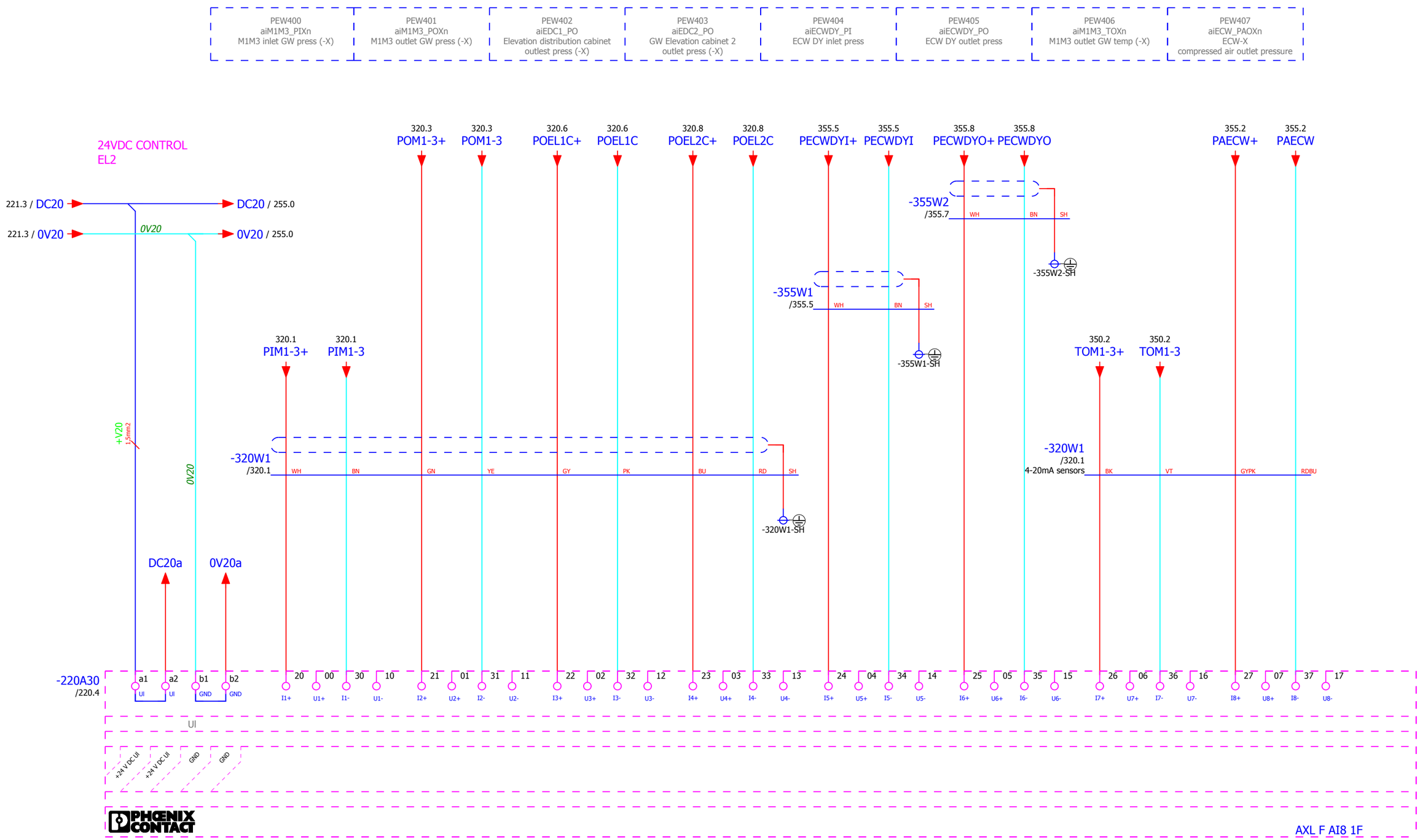

IK4 TEKNIKER Research Alliance
IK4-TEKNIKER
AVDA. OTAOLA 20
20600 Eibar (Gipuzkoa) Spain
Tfno.:(+34) 943 206744
Fax: (+34) 943 202757
Web: www.tekniker.es

Date	15/12/2017						
Reviewed	F.LÓPEZ	2.3	15/12/2017	JOSE MANUEL			
Drew by	JOSE MANUEL	Review	Date	Name	Review	Date	Name

3151_LSST

MCS Design Electrical Schematics

LSST TELESCOPE

Replaces | Replaced by

DISTRIBUTED ANALOG INPUT MODULE

Customer: EMPRESARIOS AGRUPADOS
C/Magallanes, 3
28015 MADRID
91 3098000
http://www.empresariosagrupados.es/

= E1

+ TMA-EL-CS-CBT-0102

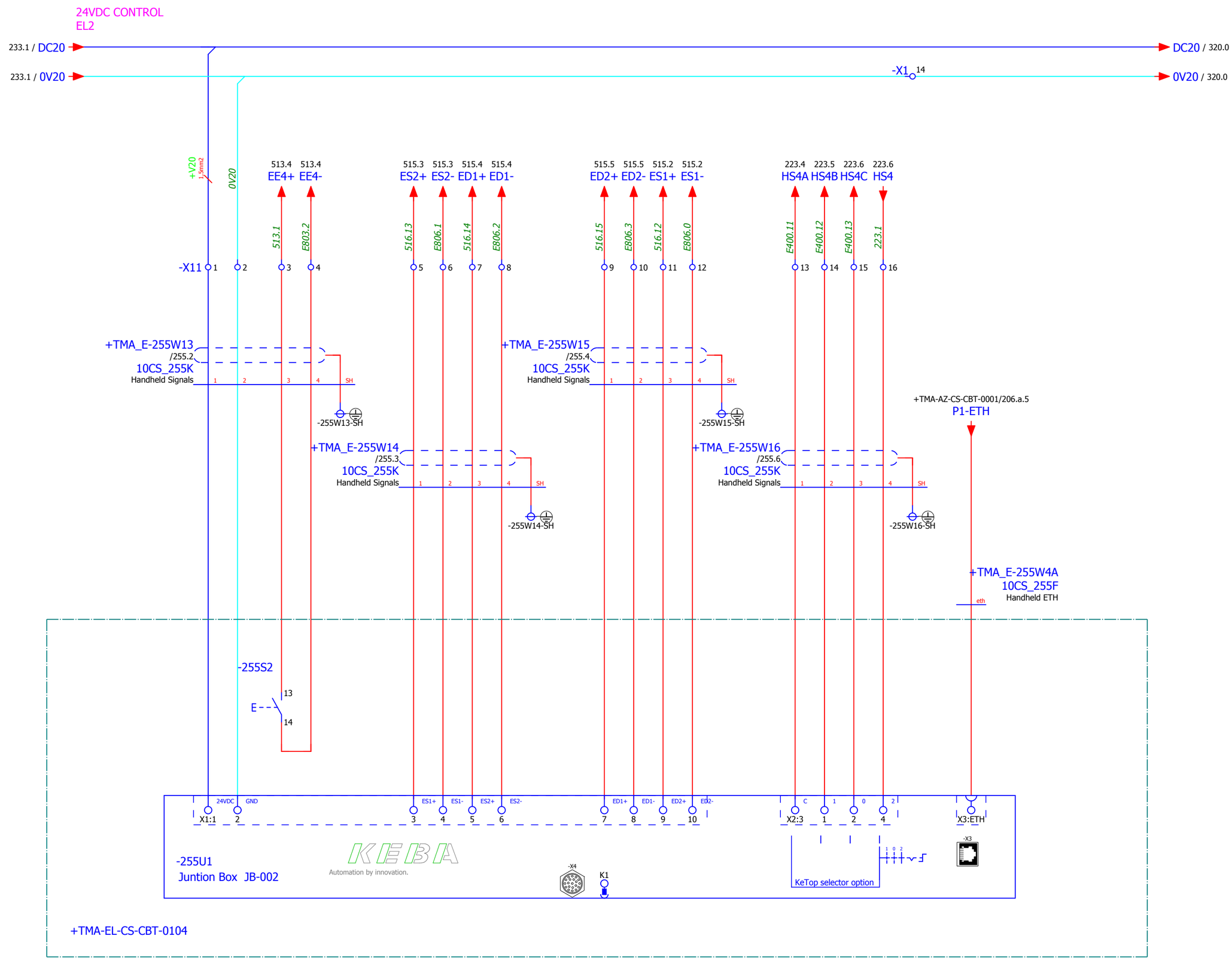

IK4 TEKNIKER
Research Alliance
IK4 TEKNIKER
POLO TECNOLOGICO DE EIBAR
C/Iñaki Goenaga nº 5
20600 Eibar (Gipuzkoa) Spain
Tfno.:(+34) 943 206744
Fax: (+34) 943 202757
Web: www.tekniker.es

Date	15/12/2017						
No traducción	E.LÓPEZ	2.3	15/12/2017	JOSE MANUEL			
Realizado	JOSE MANUEL	Revisión	Date	Name	Revisión	Date	Name

MCS Design Electrical Schematics
LSST TELESCOPE

Sustituye a: | Replaced by

HANDHELD

Cliente: EMPRESARIOS AGRUPADOS
C/Magallanes, 3
28015 MADRID
91 3098000
http://www.empresariosagrupados.es/

= E1
+ TMA-EL-CS-CBT-0102

24VDC CONTROL
EL2

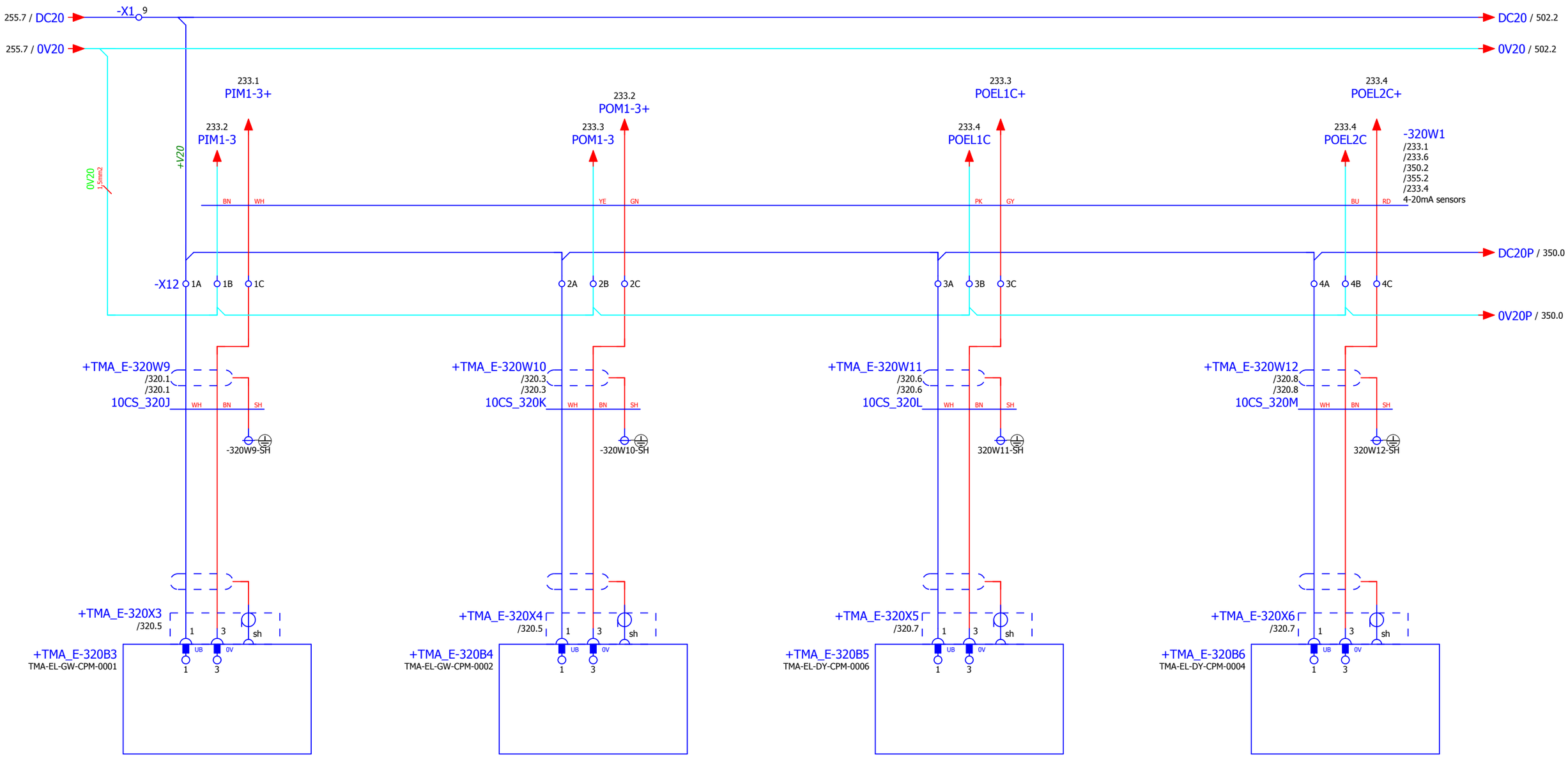

M1-M3
COOLING CIRCUIT IN PRESSURE

M1-M3
COOLING CIRCUIT OUT PRESSURE

EL1 CABINET COOLING CIRCUIT OUT PRESSURE

EL1 CABINET COOLING CIRCUIT OUT PRESSURE

TBD SENSOR:
TYPE OF SENSOR AND CONNECTION
REPRESENTED 4-20mA 2 WIRE M12 4 PIN CONNECTOR

+TMA_E-320X3 = M1-M3 COOLING CIRCUIT IN PRESSURE

+TMA_E-320X4 = M1-M3 COOLING CIRCUIT OUT PRESSURE

+TMA_E-320X5 = EL1 CABINET COOLING CIRCUIT OUT PRESSURE

+TMA_E-320X6 = EL2 CABINET COOLING CIRCUIT OUT PRESSURE

IK4 TEKNIKER Research Alliance
IK4-TEKNIKER
AVDA. OTAOLA 20
20600 Eibar (Gipuzkoa) Spain
Tfno.:(+34) 943 206744
Fax: (+34) 943 202757
Web: www.tekniker.es

Date	15/12/2017						
Reviewed	F.LÓPEZ	2.3	15/12/2017	JOSE MANUEL			
Drew by	JOSE MANUEL	Review	Date	Name	Review	Date	Name

3151_LSST
MCS Design Electrical Schematics
LSST TELESCOPE

Replaces | Replaced by

AZCW- COOLING PRESSURE SENSORS

Customer: EMPRESARIOS AGRUPADOS
C/Magallanes, 3
28015 MADRID
91 3098000
http://www.empresariosagrupados.es/

= E1
+ TMA-EL-CS-CBT-0102

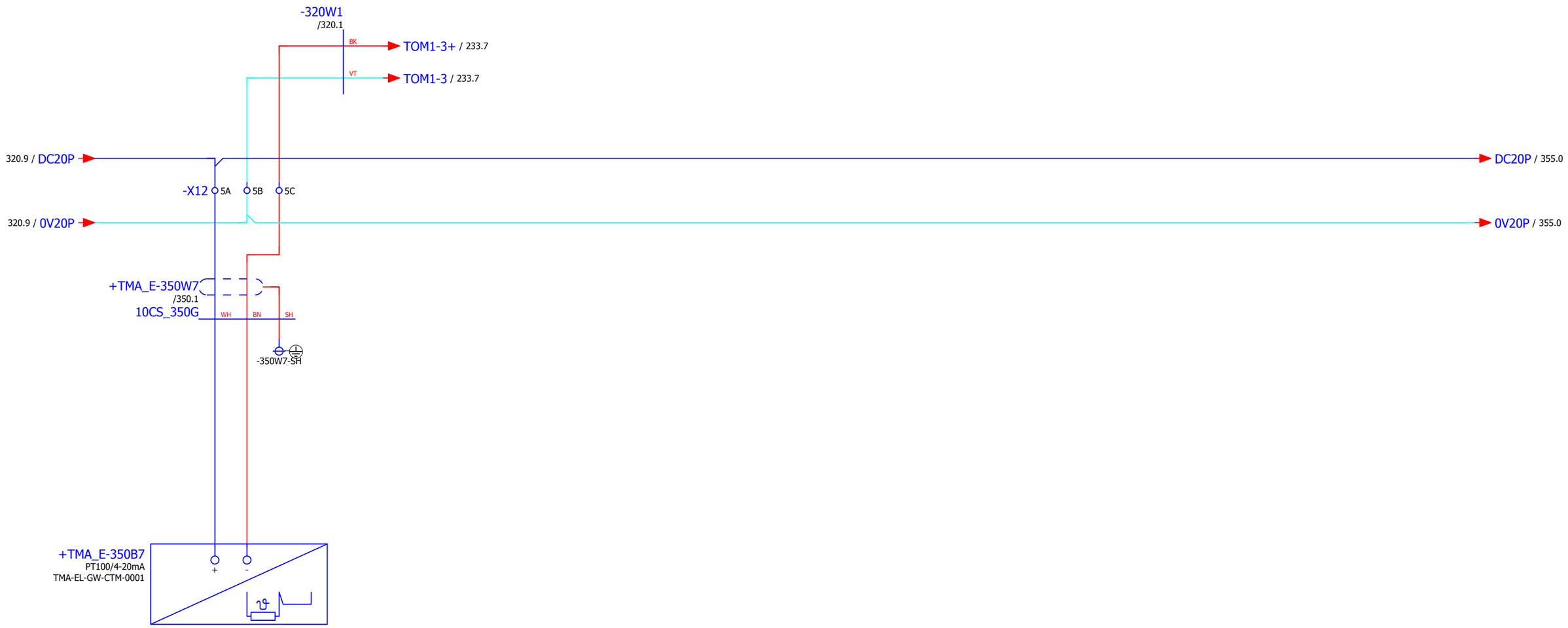

M1 M3 COOLING CIRCUIT OUT TEMPERATURE

IK4 TEKNIKER Research Alliance

IK4-TEKNIKER
AVDA. OTAOLA 20
20600 Eibar (Gipuzkoa) Spain
Tfno.:(+34) 943 206744
Fax: (+34) 943 202757
Web: www.tekniker.es

Date	15/12/2017						
Reviewed	F.LÓPEZ	2.3	15/12/2017	JOSE MANUEL			
Drew by	JOSE MANUEL	Review	Date	Name	Review	Date	Name

3151_LSST

MCS Design Electrical Schematics

LSST TELESCOPE

Replaces | Replaced by

M1 M3 TEMPERATURE PRESSURE SENSORS

Customer:

EMPRESARIOS AGRUPADOS

EMPRESARIOS AGRUPADOS
C/Magallanes, 3
28015 MADRID
91 3098000
http://www.empresariosagrupados.es/

= E1

+ TMA-EL-CS-CBT-0102

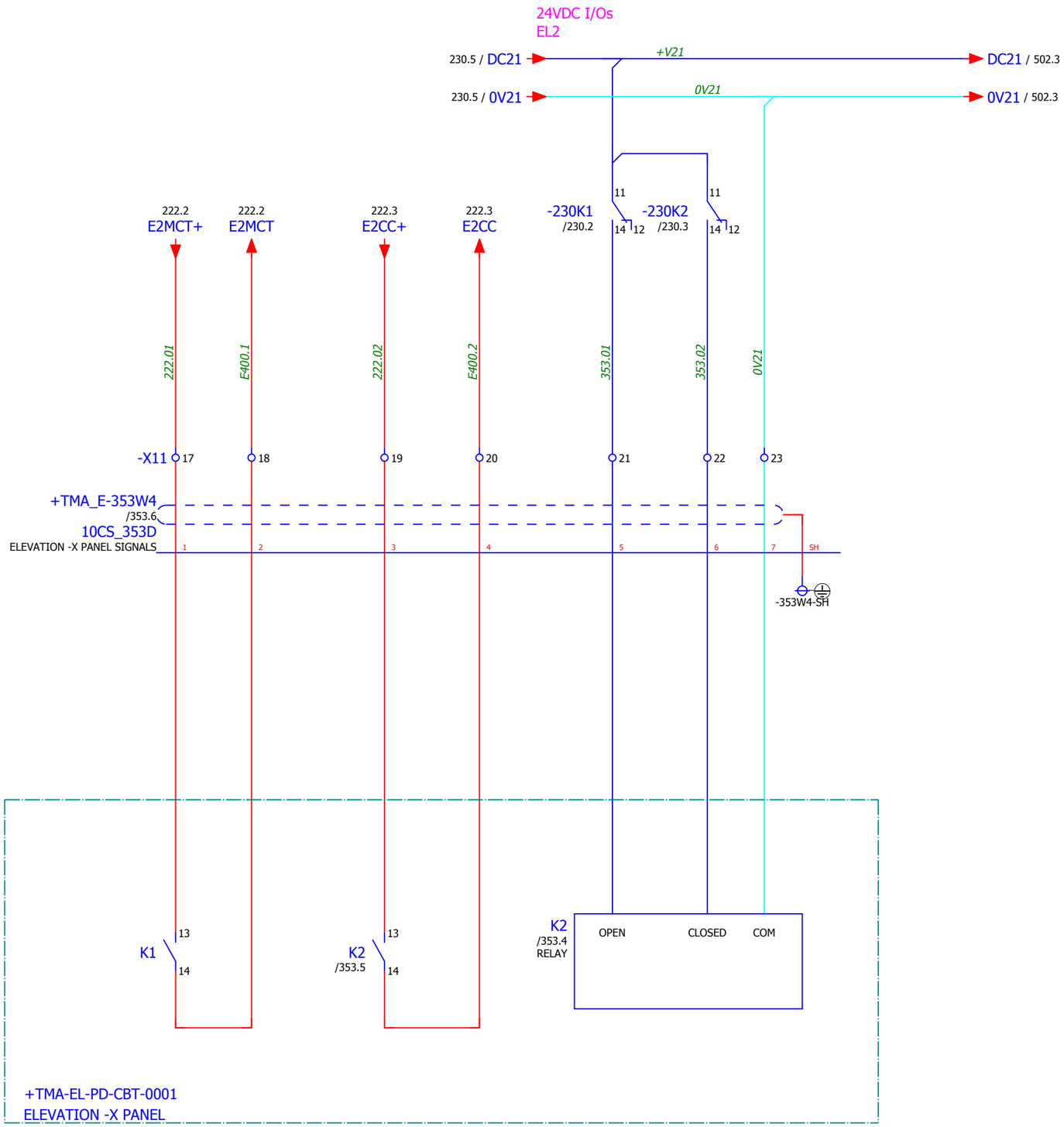

IK4 TEKNIKER Research Alliance

IK4-TEKNIKER
AVDA. OTAOLA 20
20600 Eibar (Gipuzkoa) Spain
Tfno.:(+34) 943 206744
Fax: (+34) 943 202757
Web: www.tekniker.es

Date	15/12/2017						
Reviewed	F.LÓPEZ	2.3	15/12/2017	JOSE MANUEL			
Drew by	JOSE MANUEL	Review	Date	Name	Review	Date	Name

3151_LSST

MCS Design Electrical Schematics

LSST TELESCOPE

Replaces

Replaced by

ELEVATION -X PANEL

Customer:

EMPRESARIOS AGRUPADOS

C/Magallanes, 3
28015 MADRID
91 3098000

http://www.empresariosagrupados.es/

= E1

+ TMA-EL-CS-CBT-0102

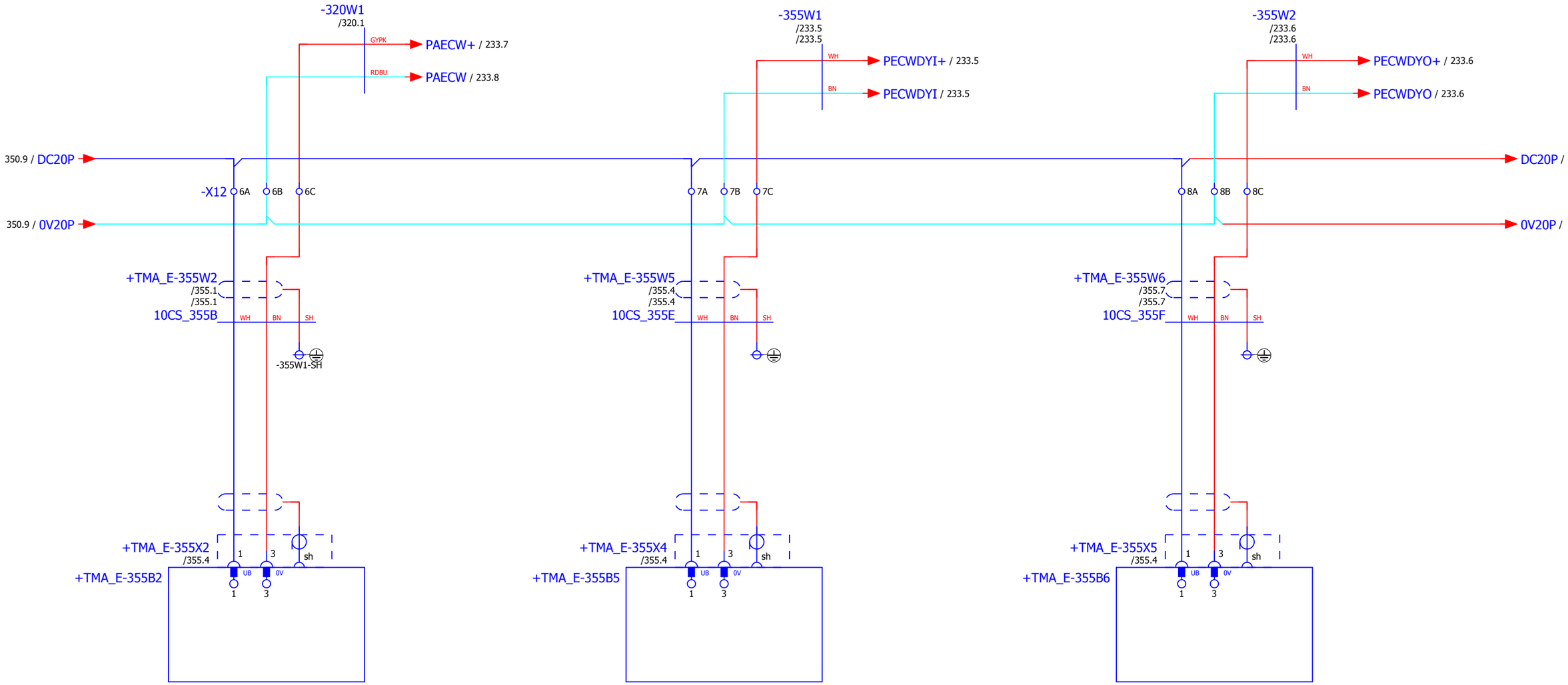

ECW-X compressed air outlet pressure

ECW-DY inlet inlet pressure

ECW-DY inlet ioutlet pressure

TBD SENSOR:
TIPO DE SENSOR Y CONEXION
SENSOR REPRESENTADO 4-20mA
TECNICA DE CONEXION A 2 HILOS
CONECTOR M12 4 PIN

+TMA_E-355X2 = SHIELDED M12 4 PIN
ECW-X compressed air outlet pressure

+TMA_E-355X4 = SHIELDED M12 4 PIN
ECW-DY inlet press

+TMA_E-355X5 = SHIELDED M12 4 PIN
ECW-DY inlet outlet pressure

IK4 TEKNIKER Research Alliance
IK4-TEKNIKER
AVDA. OTAOLA 20
20600 Eibar (Gipuzkoa) Spain
Tfno.:(+34) 943 206744
Fax: (+34) 943 202757
Web: www.tekniker.es

Date	15/12/2017						
Reviewed	F.LÓPEZ	2.3	15/12/2017	JOSE MANUEL			
Drew by	JOSE MANUEL	Review	Date	Name	Review	Date	Name

3151_LSST
MCS Design Electrical Schematics
LSST TELESCOPE
Replaces
Replaced by

AIR PRESSURE SENSORS

Customer: EMPRESARIOS AGRUPADOS
C/Magallanes, 3
28015 MADRID
91 3098000
http://www.empresariosagrupados.es/

= E1
+ TMA-EL-CS-CBT-0102

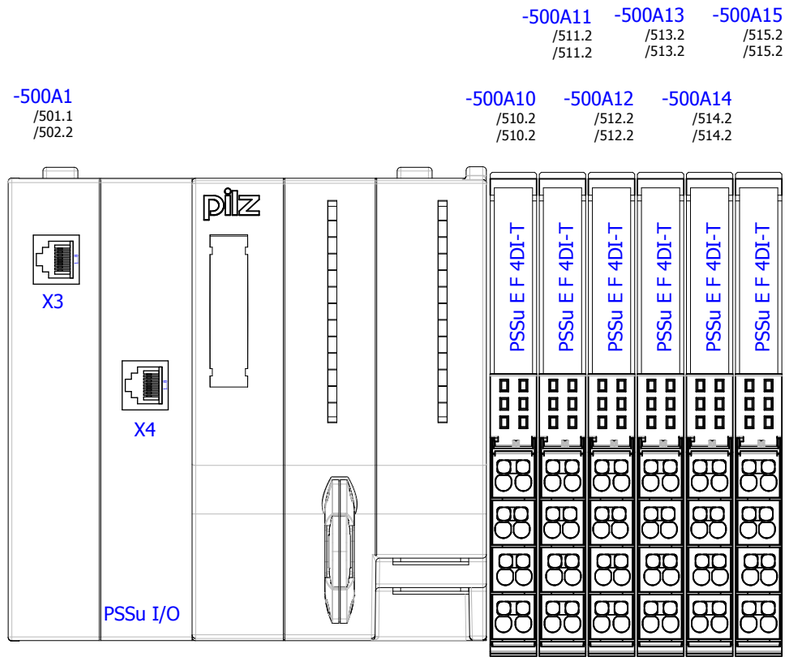

IK4 TEKNIKER Research Alliance

IK4-TEKNIKER
AVDA. OTAOLA 20
20600 Eibar (Gipuzkoa) Spain
Tfno.:(+34) 943 206744
Fax: (+34) 943 202757
Web: www.tekniker.es

Date	23/02/2017						
Reviewed	F.LÓPEZ	2.3	15/12/2017	JOSE MANUEL			
Drew by	jcastano	Review	Date	Name	Review	Date	Name

3151_LSST

MCS Design Electrical Schematics

LSST TELESCOPE

Replaces | Replaced by

EMERGENCY PLC PSSuniversal

Customer: EMPRESARIOS AGRUPADOS

C/Magallanes, 3
28015 MADRID
91 3098000

http://www.empresariosagrupados.es/

= E1

+ TMA-EL-CS-CBT-0102

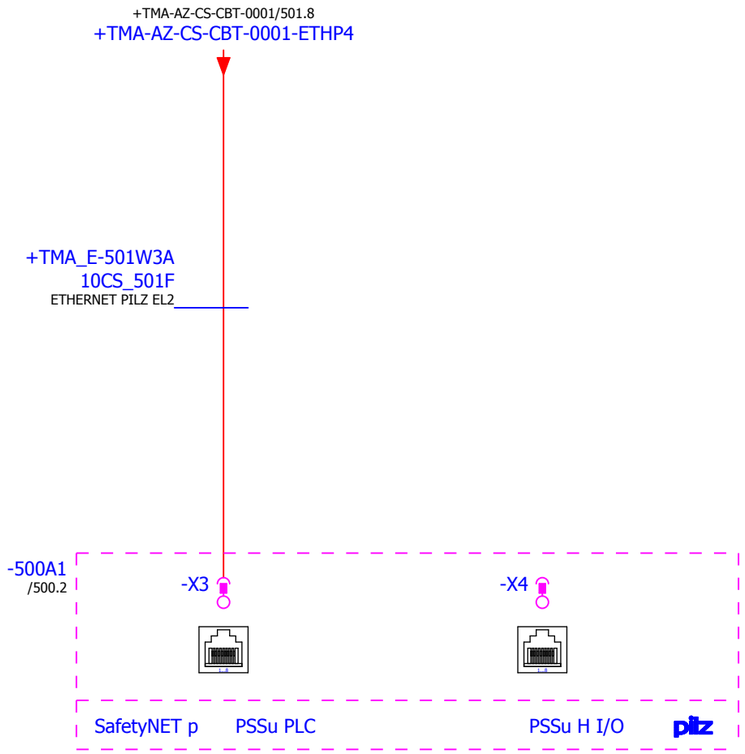

IK4 TEKNIKER Research Alliance
IK4-TEKNIKER
AVDA. OTAOLA 20
20600 Eibar (Gipuzkoa) Spain
Tfno.:(+34) 943 206744
Fax: (+34) 943 202757
Web: www.tekniker.es

Date	15/12/2017						
Reviewed	F.LÓPEZ	2.3	15/12/2017	JOSE MANUEL			
Drew by	JOSE MANUEL	Review	Date	Name	Review	Date	Name

3151_LSST
MCS Design Electrical Schematics
LSST TELESCOPE

Replaces | Replaced by

SAFETY NET

Customer: EMPRESARIOS AGRUPADOS
C/Magallanes, 3
28015 MADRID
91 3098000
http://www.empresariosagrupados.es/

= E1
+ TMA-EL-CS-CBT-0102

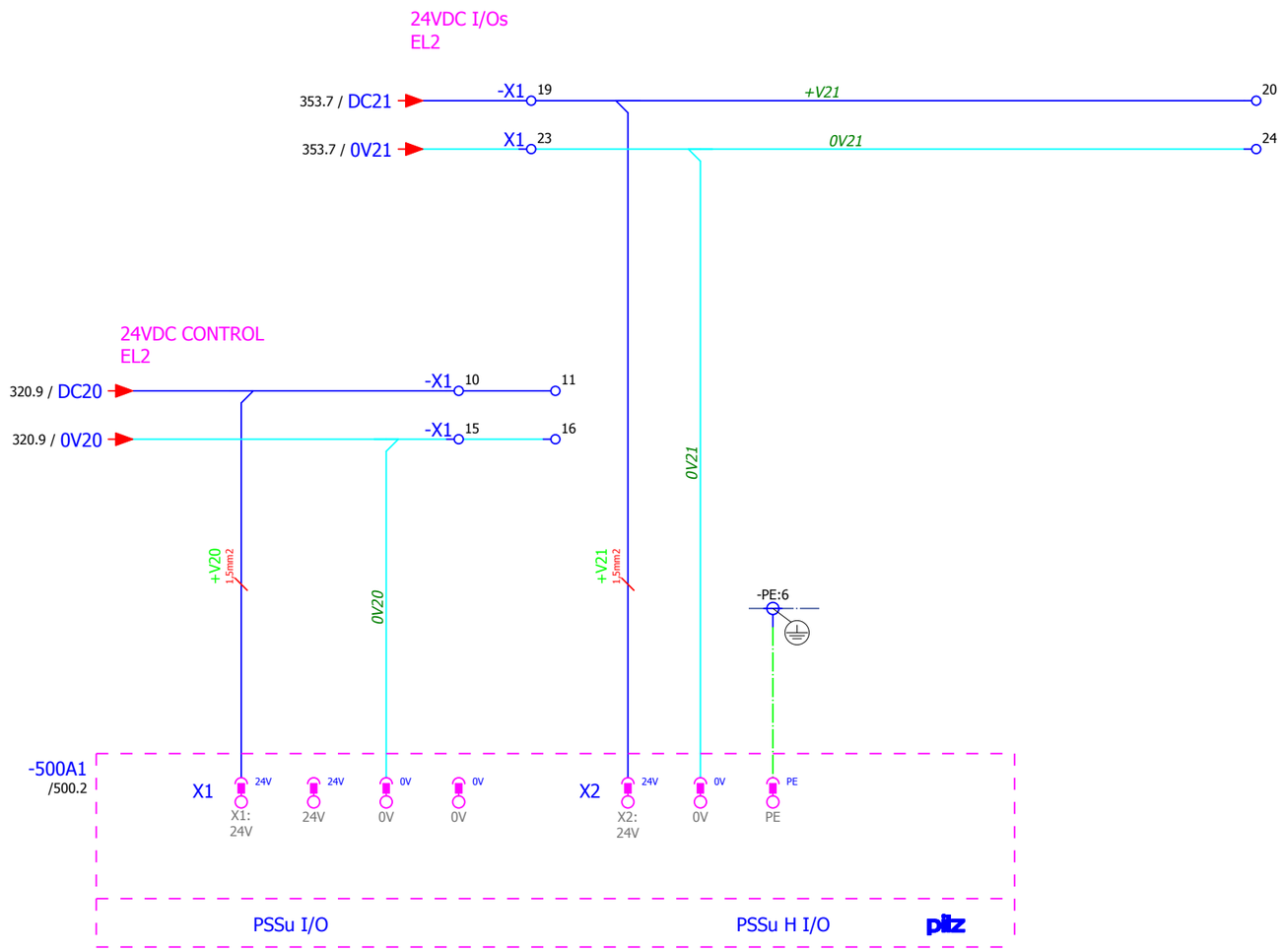

IK4-TEKNIKER
AVDA. OTAOLA 20
20600 Eibar (Gipuzkoa) Spain
Tfno.:(+34) 943 206744
Fax: (+34) 943 202757
Web: www.tekniker.es

Date	14/12/2017						
Reviewed	F.LÓPEZ	2.3	15/12/2017	JOSE MANUEL			
Drew by	JOSE MANUEL	Review	Date	Name	Review	Date	Name

3151_LSST
MCS Design Electrical Schematics
LSST TELESCOPE

Replaces | Replaced by

POWER SAFETY PSS

Customer: EMPRESARIOS AGRUPADOS
C/Magallanes, 3
28015 MADRID
91 3098000
http://www.empresariosagrupados.es/

= E1
+ TMA-EL-CS-CBT-0102

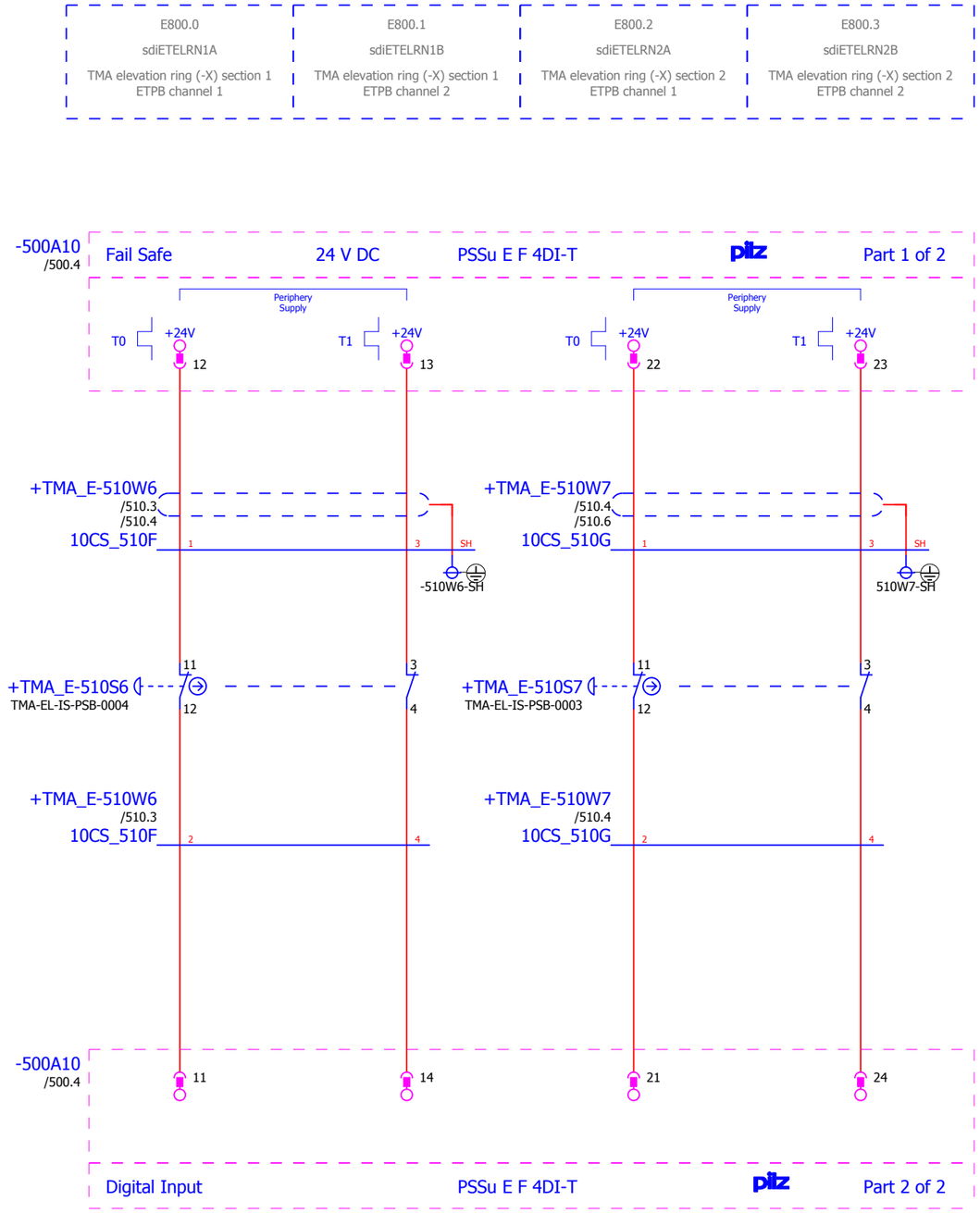

IK4-TEKNIKER
AVDA. OTAOLA 20
20600 Eibar (Gipuzkoa) Spain
Tfno.:(+34) 943 206744
Fax: (+34) 943 202757
Web: www.tekniker.es

Date	15/12/2017							
Reviewed	F.LÓPEZ	2.3	15/12/2017	JOSE MANUEL				
Drew by	JOSE MANUEL	Review	Date	Name	Review	Date	Name	

3151_LSST
MCS Design Electrical Schematics
LSST TELESCOPE

Replaces | Replaced by

SAFETY DIGITAL INPUTS

Customer: EMPRESARIOS AGRUPADOS
C/Magallanes, 3
28015 MADRID
91 3098000
http://www.empresariosagrupados.es/

= E1
+ TMA-EL-CS-CBT-0102

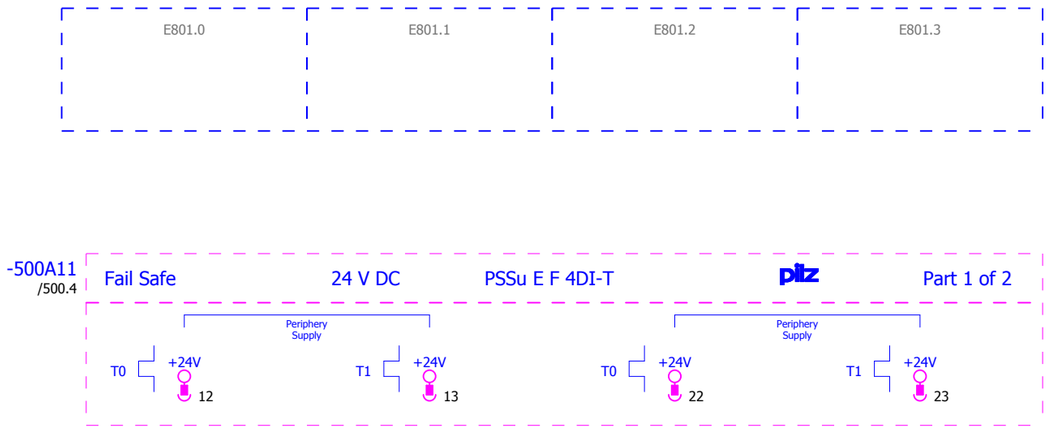

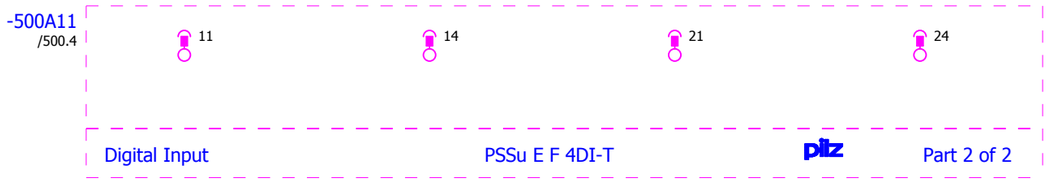

IK4 TEKNIKER Research Alliance
IK4-TEKNIKER
AVDA. OTAOLA 20
20600 Eibar (Gipuzkoa) Spain
Tfno.:(+34) 943 206744
Fax: (+34) 943 202757
Web: www.tekniker.es

Date	15/12/2017						
Reviewed	F.LÓPEZ	2.3	15/12/2017	JOSE MANUEL			
Drew by	JOSE MANUEL	Review	Date	Name	Review	Date	Name

3151_LSST
MCS Design Electrical Schematics
LSST TELESCOPE

Replaces | Replaced by

SAFETY DIGITAL INPUTS

Customer: EMPRESARIOS AGRUPADOS
C/Magallanes, 3
28015 MADRID
91 3098000
http://www.empresariosagrupados.es/

= E1
+ TMA-EL-CS-CBT-0102

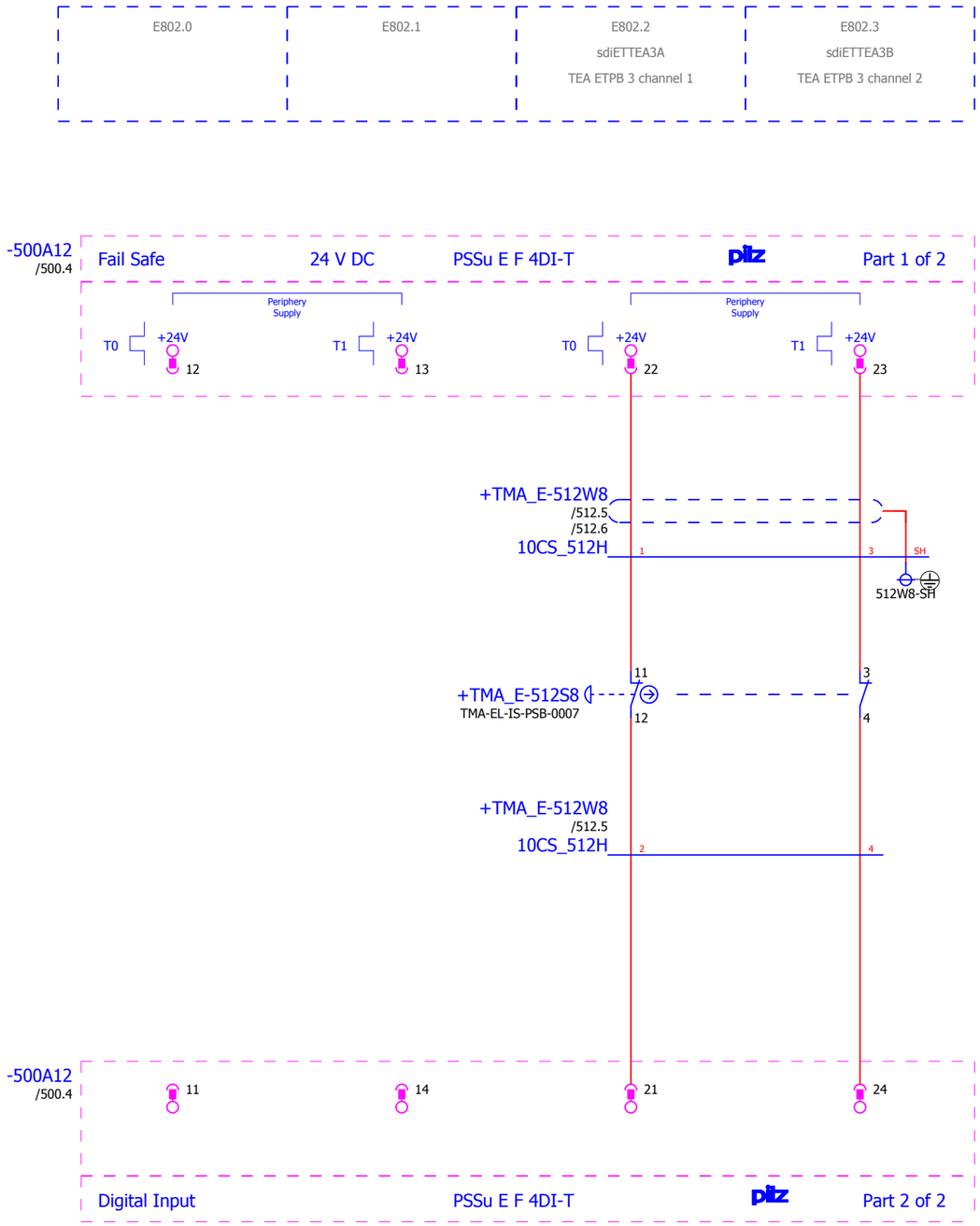

IK4 TEKNIKER Research Alliance

IK4-TEKNIKER
AVDA. OTAOLA 20
20600 Eibar (Gipuzkoa) Spain
Tfno.:(+34) 943 206744
Fax: (+34) 943 202757
Web: www.tekniker.es

Date	15/12/2017						
Reviewed	F.LÓPEZ	2.3	15/12/2017	JOSE MANUEL			
Drew by	JOSE MANUEL	Review	Date	Name	Review	Date	Name

3151_LSST

MCS Design Electrical Schematics

LSST TELESCOPE

Replaces | Replaced by

SAFETY DIGITAL INPUTS

Customer: EMPRESARIOS AGRUPADOS

C/Magallanes, 3
28015 MADRID
91 3098000
http://www.empresariosagrupados.es/

= E1

+ TMA-EL-CS-CBT-0102

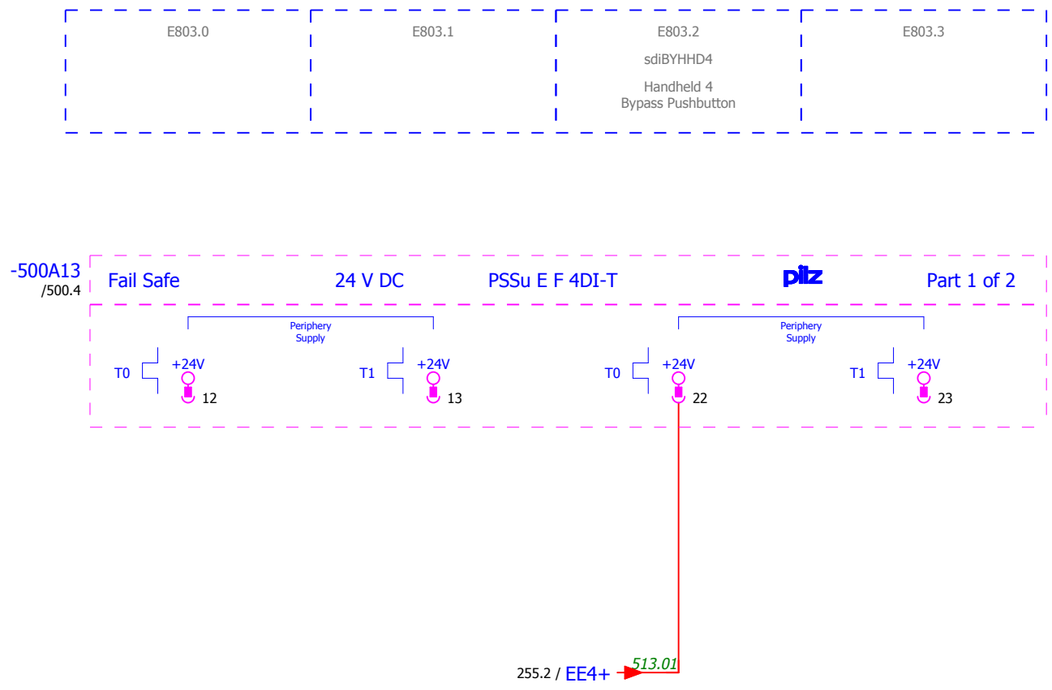

IK4 TEKNIKER Research Alliance

IK4-TEKNIKER
AVDA. OTAOLA 20
20600 Eibar (Gipuzkoa) Spain
Tfno.:(+34) 943 206744
Fax: (+34) 943 202757
Web: www.tekniker.es

Date	15/12/2017						
Reviewed	F.LÓPEZ	2.3	15/12/2017	JOSE MANUEL			
Drew by	JOSE MANUEL	Review	Date	Name	Review	Date	Name

3151_LSST

MCS Design Electrical Schematics

LSST TELESCOPE

Replaces | Replaced by

SAFETY DIGITAL INPUTS

Customer: EMPRESARIOS AGRUPADOS

C/Magallanes, 3
28015 MADRID
91 3098000

http://www.empresariosagrupados.es/

= E1

+ TMA-EL-CS-CBT-0102

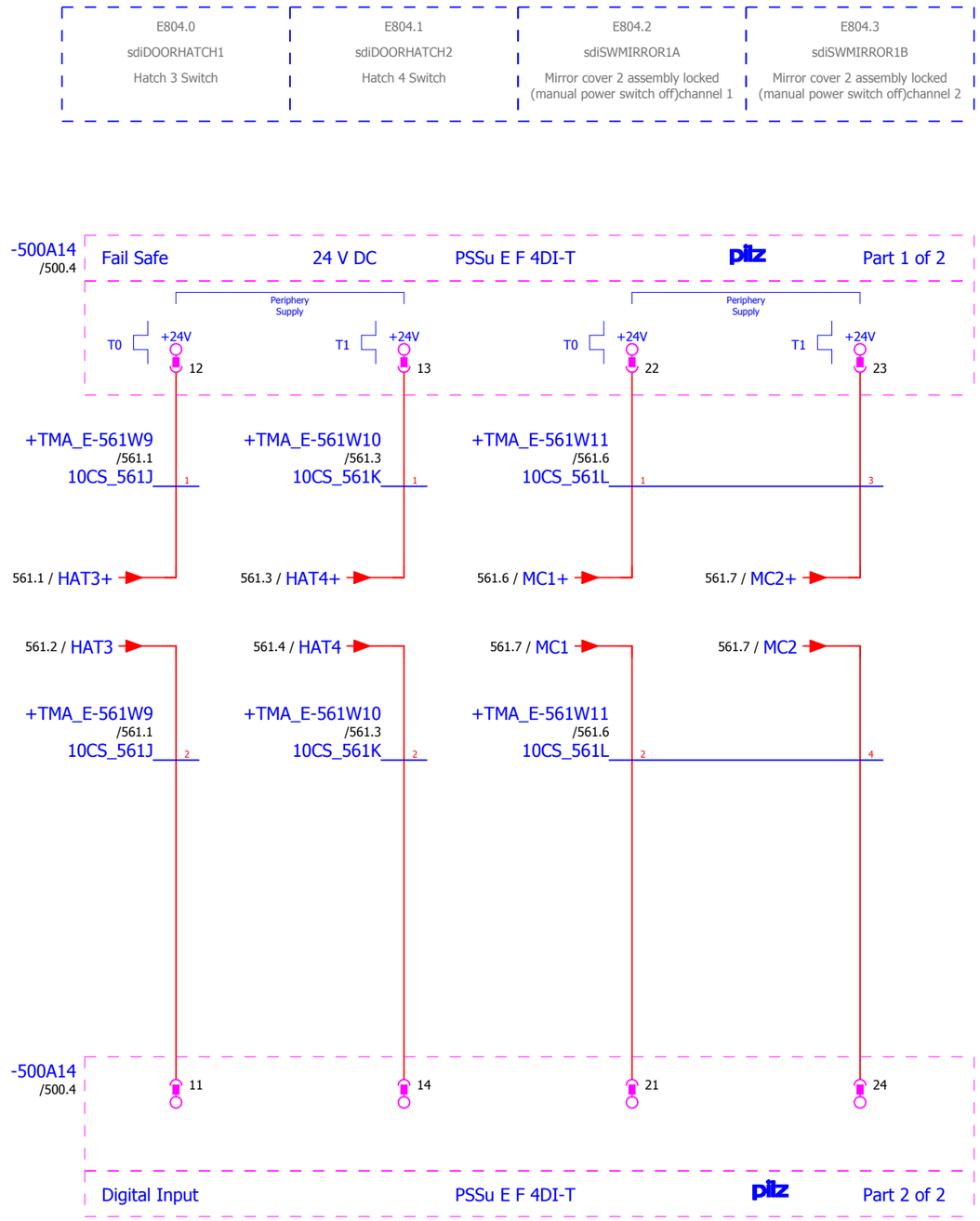

IK4 TEKNIKER Research Alliance

IK4-TEKNIKER
AVDA. OTAOLA 20
20600 Eibar (Gipuzkoa) Spain
Tfno.:(+34) 943 206744
Fax: (+34) 943 202757
Web: www.tekniker.es

Date	15/12/2017						
Reviewed	F.LÓPEZ	2.3	15/12/2017	JOSE MANUEL			
Drew by	JOSE MANUEL	Review	Date	Name	Review	Date	Name

3151_LSST

MCS Design Electrical Schematics

LSST TELESCOPE

Replaces | Replaced by

SAFETY DIGITAL INPUTS

Customer: EMPRESARIOS AGRUPADOS
C/Magallanes, 3
28015 MADRID
91 3098000
http://www.empresariosagrupados.es/

= E1
+ TMA-EL-CS-CBT-0102

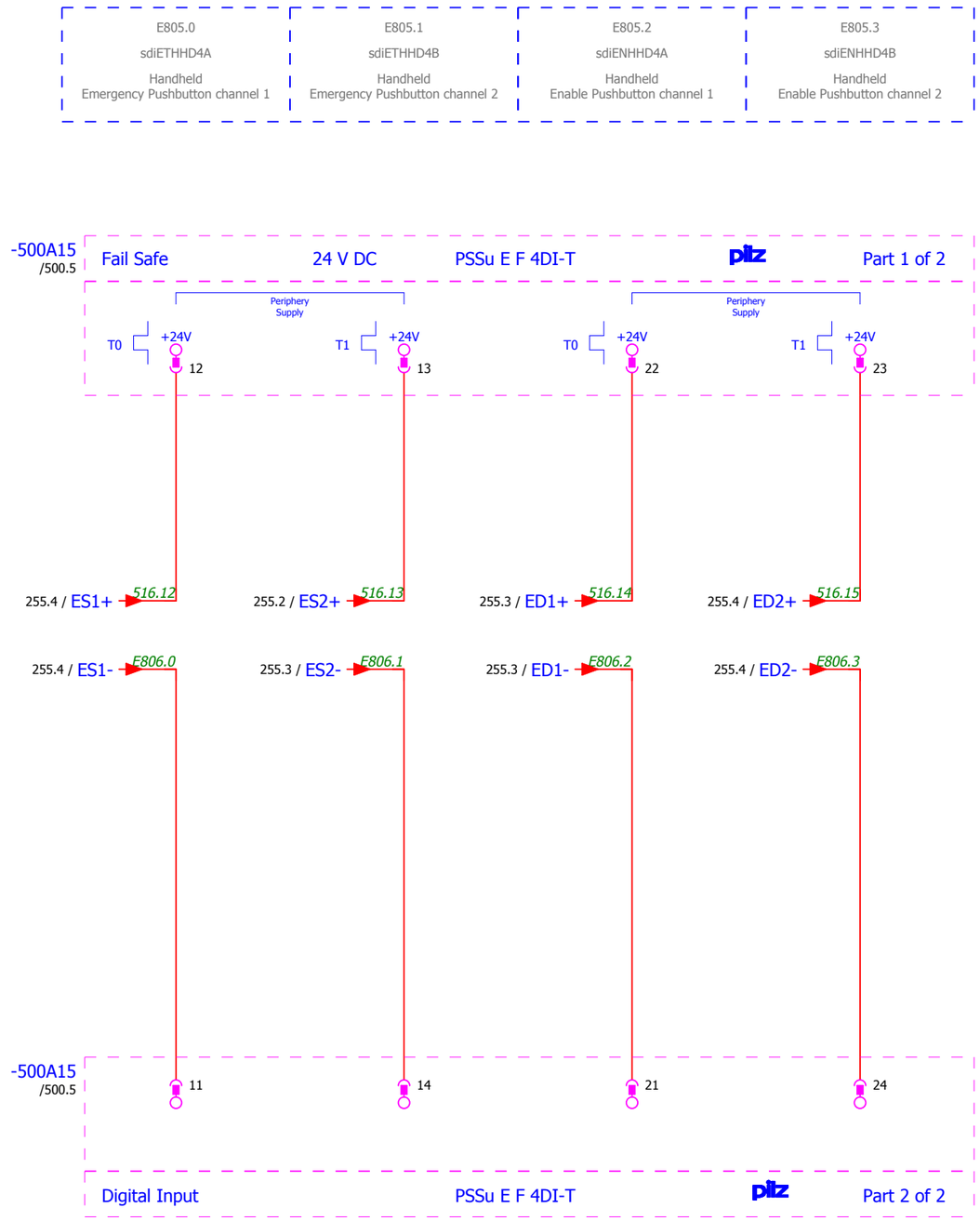

IK4-TEKNIKER
AVDA. OTAOLA 20
20600 Eibar (Gipuzkoa) Spain
Tfno.:(+34) 943 206744
Fax: (+34) 943 202757
Web: www.tekniker.es

Date	20/11/2017						
Reviewed	F.LÓPEZ	2.3	15/12/2017	JOSE MANUEL			
Drew by	JOSE MANUEL	Review	Date	Name	Review	Date	Name

3151_LSST
MCS Design Electrical Schematics
LSST TELESCOPE

Replaces
Replaced by

SAFETY DIGITAL INPUTS

Customer:
EMPRESARIOS AGRUPADOS
C/Magallanes, 3
28015 MADRID
91 3098000
http://www.empresariosagrupados.es/

= E1
+ TMA-EL-CS-CBT-0102

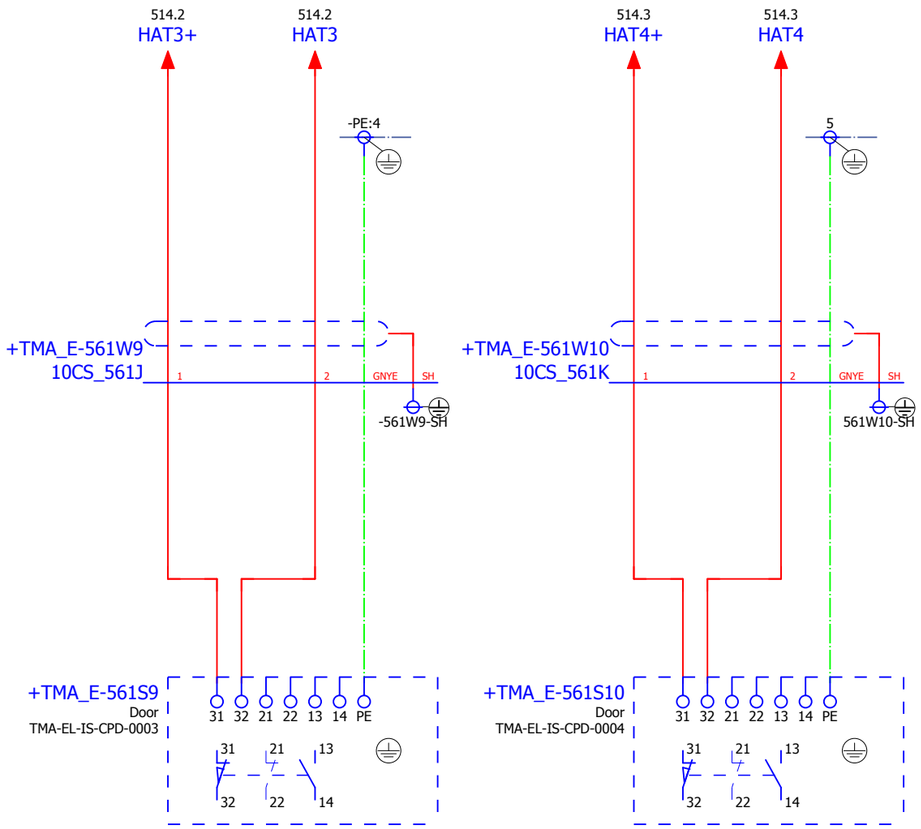

Hatch 3

Hatch 4

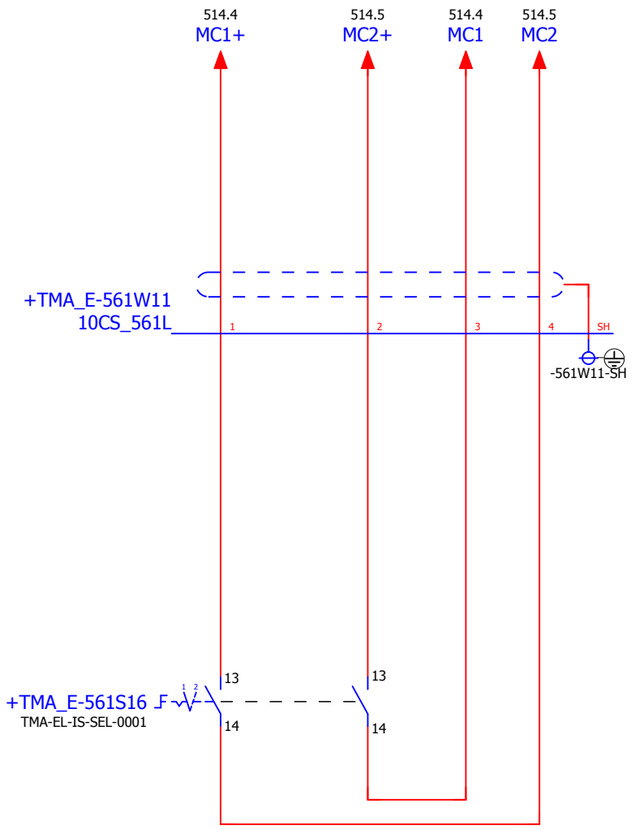

Mirror cover 2 assembly locked

IK4 TEKNIKER Research Alliance
IK4-TEKNIKER
AVDA. OTAOLA 20
20600 Eibar (Gipuzkoa) Spain
Tfno.:(+34) 943 206744
Fax: (+34) 943 202757
Web: www.tekniker.es

Date	15/12/2017						
Reviewed	F.LÓPEZ	2.3	15/12/2017	JOSE MANUEL			
Drew by	JOSE MANUEL	Review	Date	Name	Review	Date	Name

3151_LSST
MCS Design Electrical Schematics
LSST TELESCOPE

Replaces | Replaced by

SECURITY Limit Switch

Customer:
EMPRESARIOS AGRUPADOS
C/Magallanes, 3
28015 MADRID
91 3098000
http://www.empresariosagrupados.es/

= E1
+ TMA-EL-CS-CBT-0102

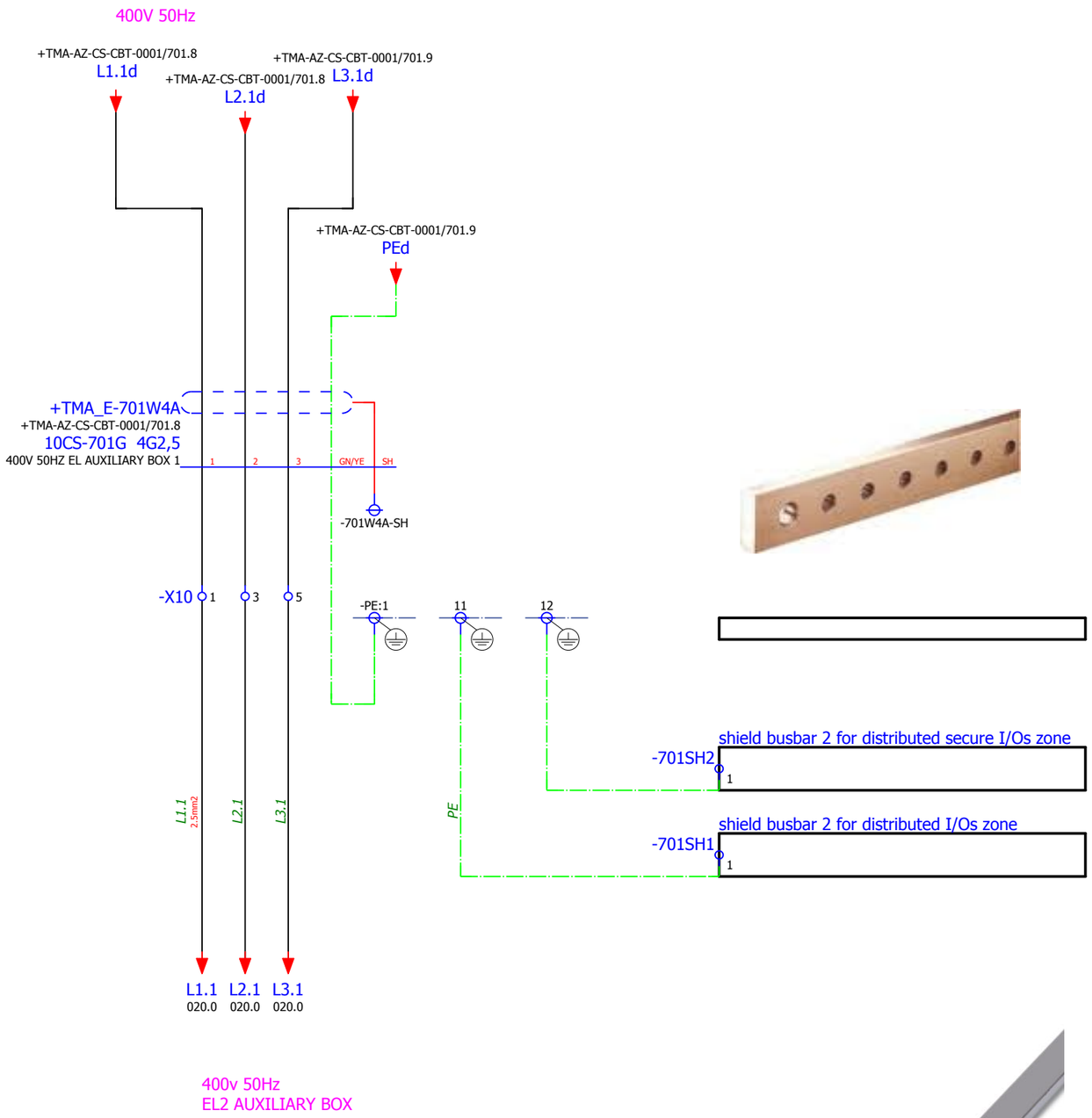

IK4 TEKNIKER Research Alliance
IK4-TEKNIKER
AVDA. OTAOLA 20
20600 Eibar (Gipuzkoa) Spain
Tfno.:(+34) 943 206744
Fax: (+34) 943 202757
Web: www.tekniker.es

Date	15/12/2017						
Reviewed	F.LÓPEZ	2.3	15/12/2017	JOSE MANUEL			
Drew by	JOSE MANUEL	Review	Date	Name	Review	Date	Name

3151_LSST

MCS Design Electrical Schematics

LSST TELESCOPE

Replaces | Replaced by

POWER SUPPLY FROM MAIN CONTROL CABINET

Customer: EMPRESARIOS AGRUPADOS
C/Magallanes, 3
28015 MADRID
91 3098000
http://www.empresariosagrupados.es/

= E1
+ TMA-EL-CS-CBT-0102

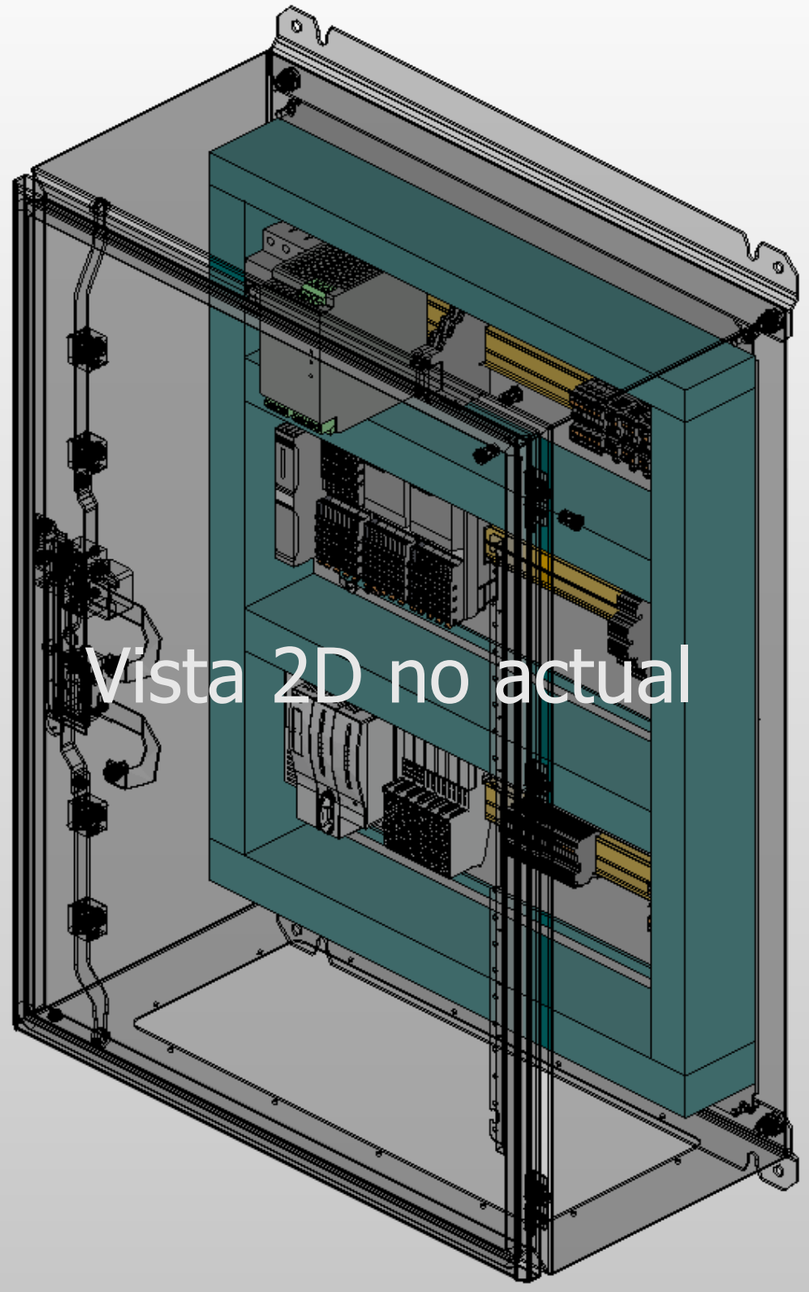

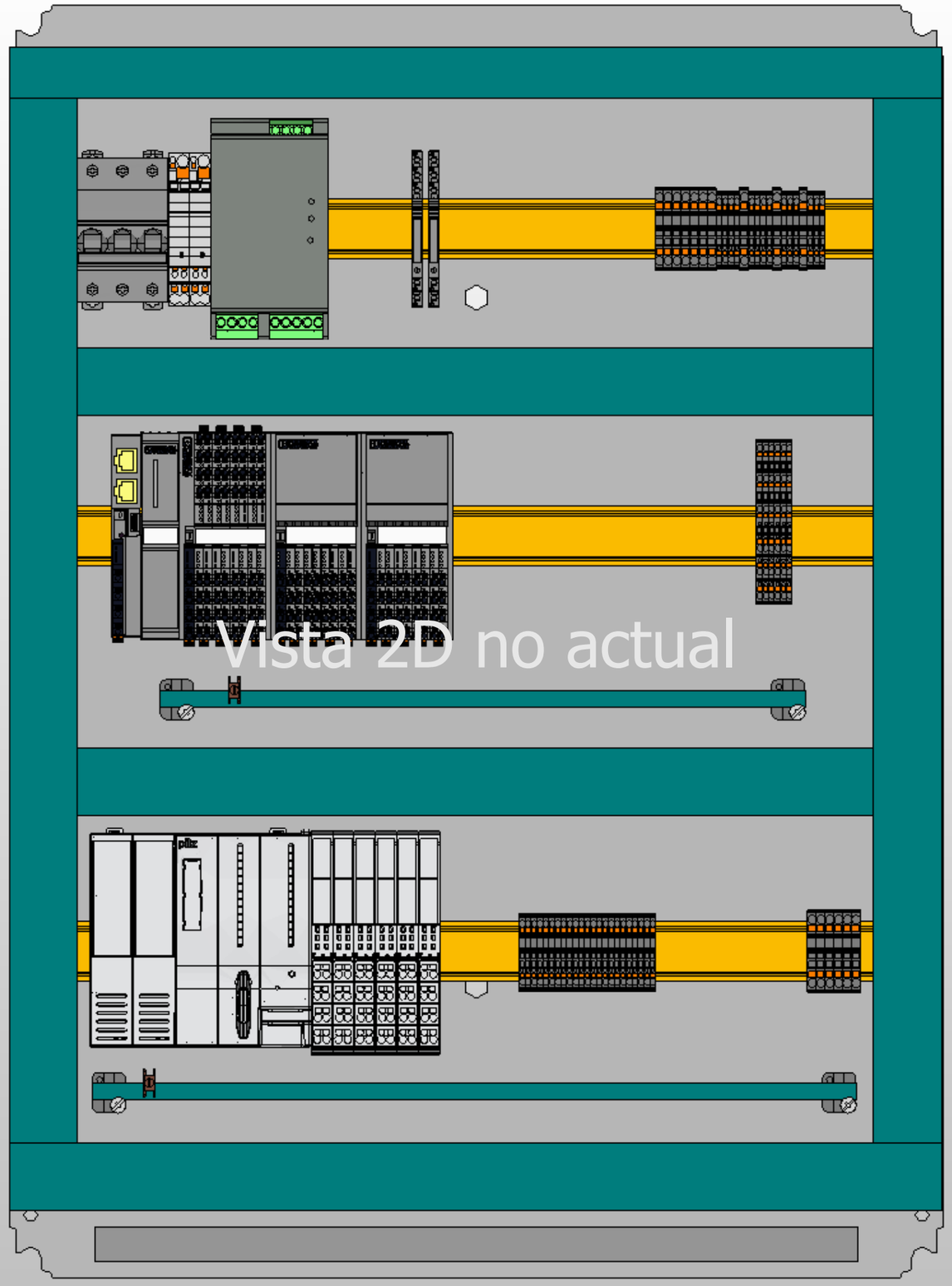

IK4-TEKNIKER
AVDA. OTAOLA 20
20600 Eibar (Gipuzkoa) Spain
Tfno.:(+34) 943 206744
Fax: (+34) 943 202757
Web: www.tekniker.es

Date	05/07/2017							
Reviewed	F.LÓPEZ	2.3	15/12/2017	JOSE MANUEL				
Drew by	JOSE MANUEL	Review	Date	Name	Review	Date	Name	

3151_LSST

MCS Design Electrical Schematics

LSST TELESCOPE

Replaces | Replaced by

BOX VIEW

Customer: EMPRESARIOS AGRUPADOS
C/Magallanes, 3
28015 MADRID
91 3098000
http://www.empresariosagrupados.es/

= E1
+ TMA-EL-CS-CBT-0102

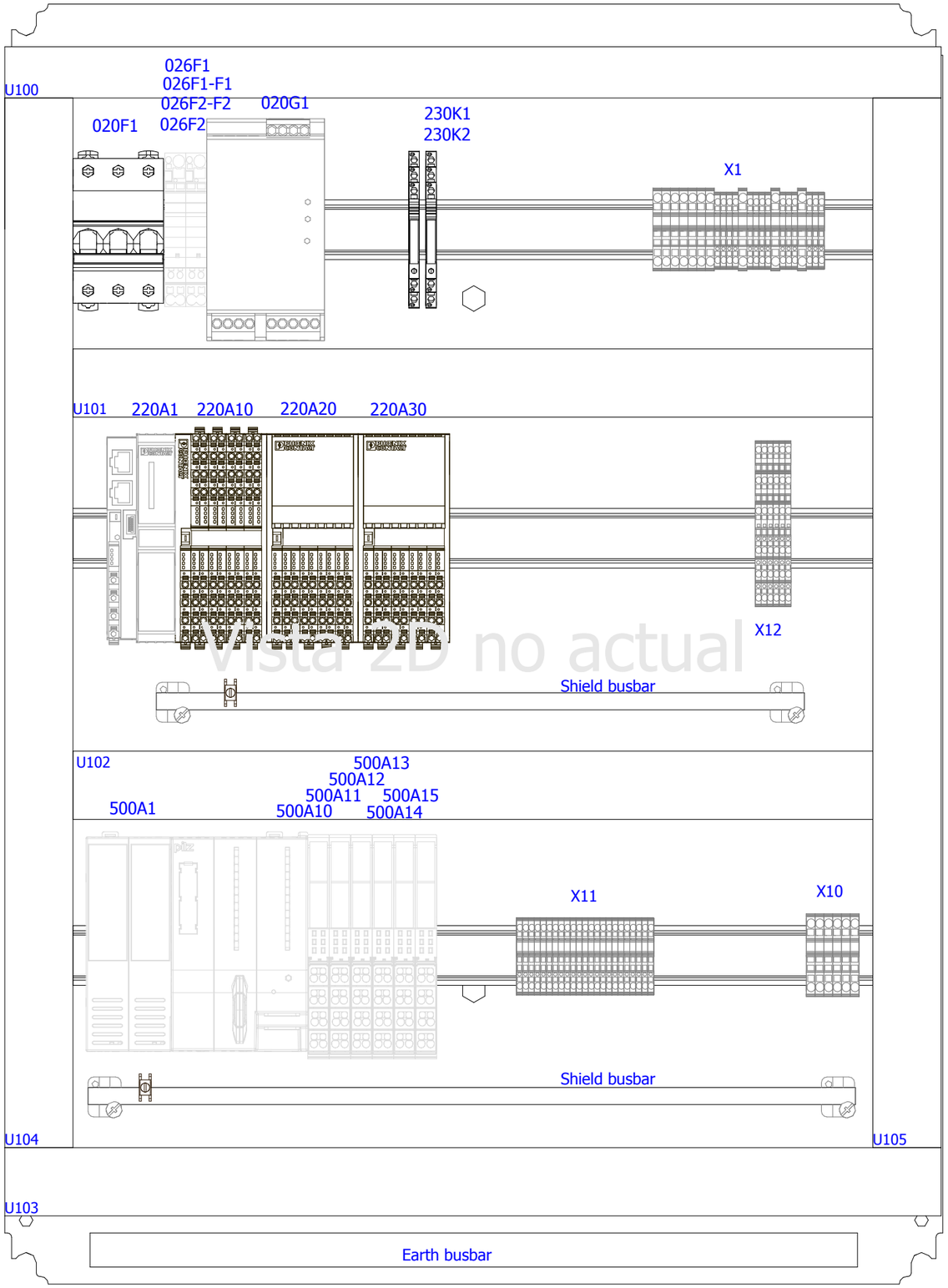

Vista 2D no actual

IK4 TEKNIKER Research Alliance

IK4-TEKNIKER
AVDA. OTAOLA 20
20600 Eibar (Gipuzkoa) Spain
Tfno.:(+34) 943 206744
Fax: (+34) 943 202757
Web: www.tekniker.es

Date	05/07/2017						
Reviewed	F.LÓPEZ	2.3	15/12/2017	JOSE MANUEL			
Drew by	JOSE MANUEL	Review	Date	Name	Review	Date	Name

3151_LSST

MCS Design Electrical Schematics

LSST TELESCOPE

Replaces | Replaced by

Mounting Plate

Customer: EMPRESARIOS AGRUPADOS

EMPRESARIOS AGRUPADOS
C/Magallanes, 3
28015 MADRID
91 3098000
http://www.empresariosagrupados.es/

= E1

+ TMA-EL-CS-CBT-0102

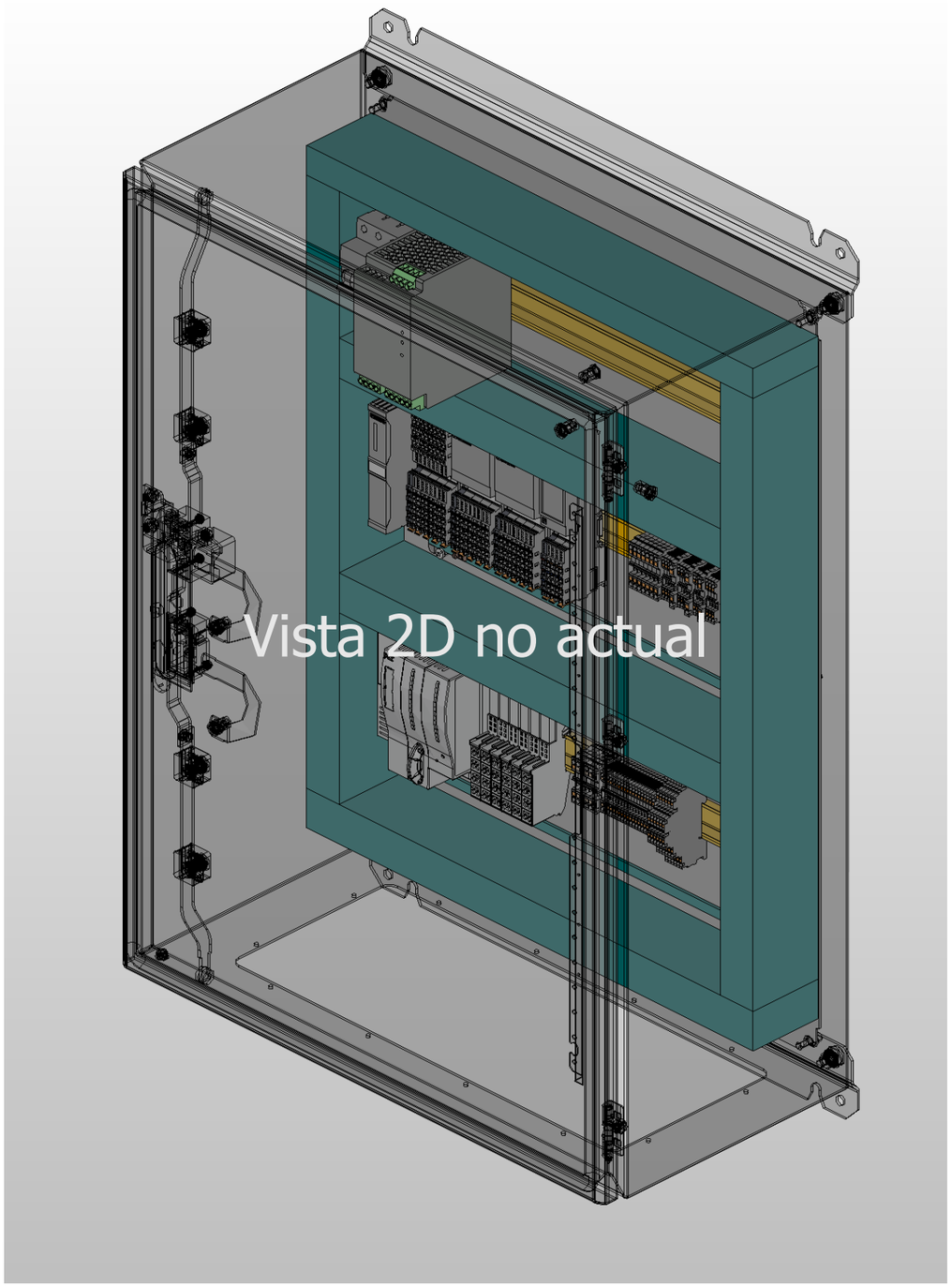

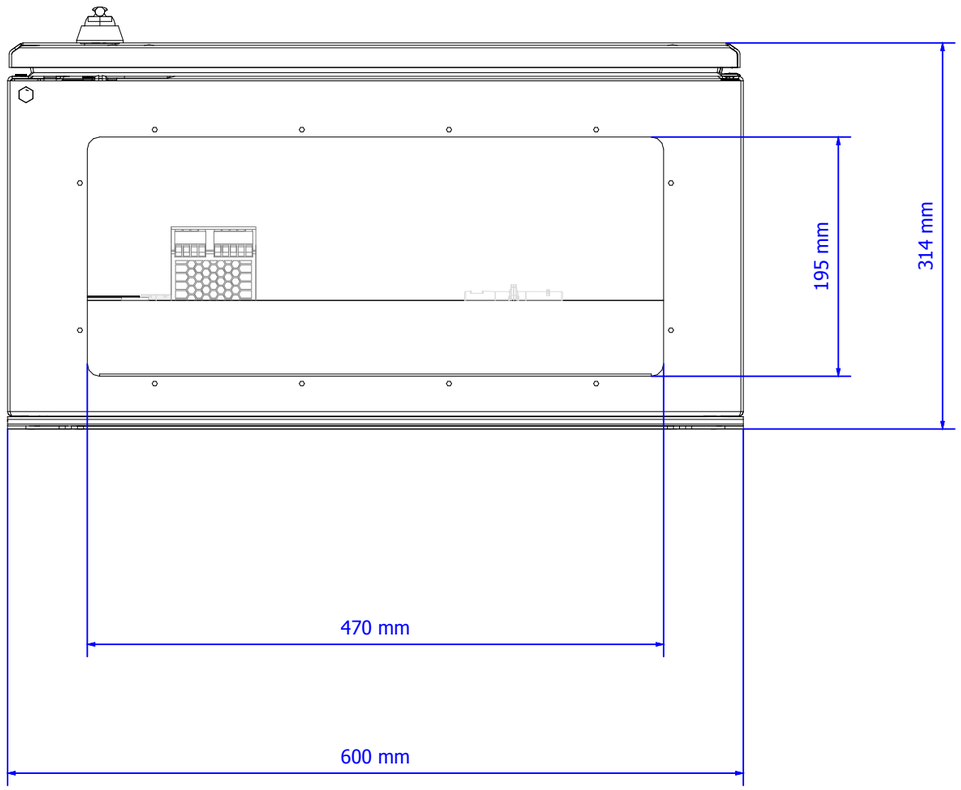

IK4 TEKNIKER Research Alliance
IK4-TEKNIKER
AVDA. OTAOLA 20
20600 Eibar (Gipuzkoa) Spain
Tfno.:(+34) 943 206744
Fax: (+34) 943 202757
Web: www.tekniker.es

Date	20/01/2017						
Reviewed	F.LÓPEZ	2.3	15/12/2017	JOSE MANUEL			
Drew by	jcastano	Review	Date	Name	Review	Date	Name

3151_LSST

MCS Design Electrical Schematics

LSST TELESCOPE

Replaces | Replaced by

CABLE ENTRANCE DIMENSIONS

Customer: EMPRESARIOS AGRUPADOS
C/Magallanes, 3
28015 MADRID
91 3098000
http://www.empresariosagrupados.es/

= E1
+ TMA-EL-CS-CBT-0102

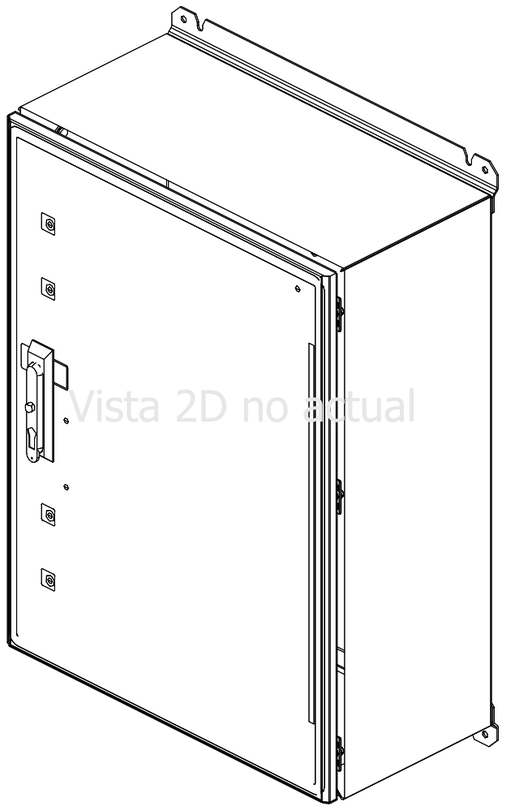

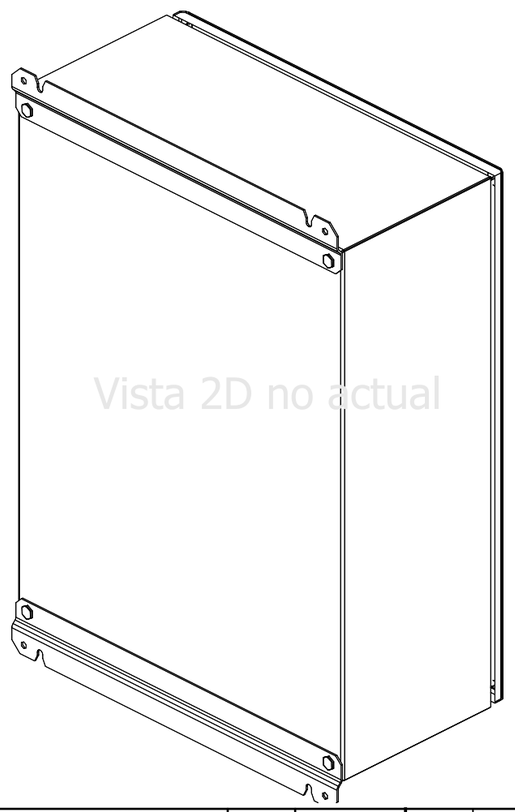

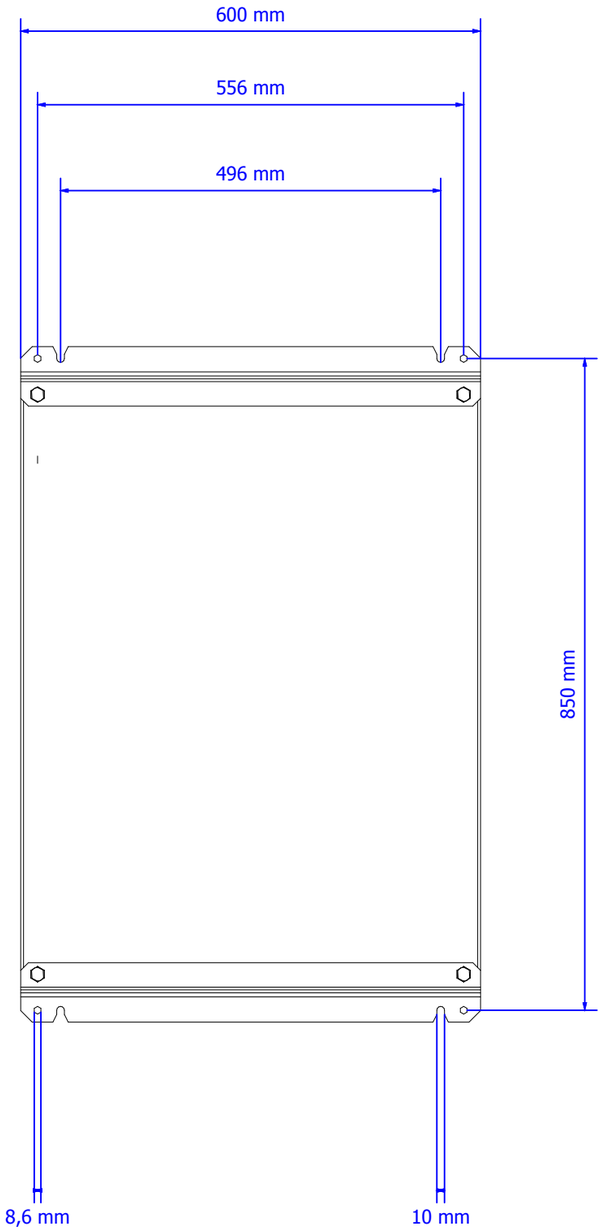

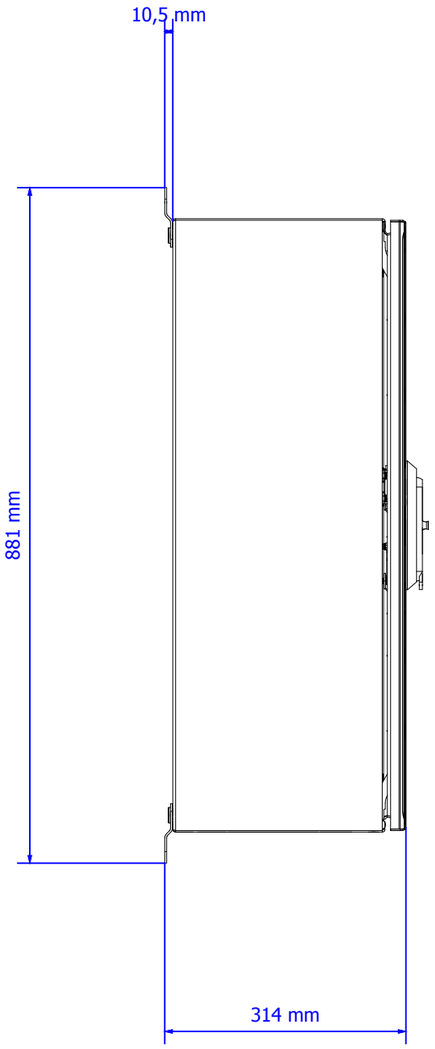

IK4 TEKNIKER Research Alliance

IK4-TEKNIKER
AVDA. OTAOLA 20
20600 Eibar (Gipuzkoa) Spain
Tfno.:(+34) 943 206744
Fax: (+34) 943 202757
Web: www.tekniker.es

Date	20/01/2017						
Reviewed	F.LÓPEZ	2.3	15/12/2017	JOSE MANUEL			
Drew by	jcastano	Review	Date	Name	Review	Date	Name

3151_LSST — MCS Design Electrical Schematics

LSST TELESCOPE

Replaces | Replaced by

CABINET DIMENSIONS

Customer: EMPRESARIOS AGRUPADOS
C/Magallanes, 3
28015 MADRID
91 3098000
http://www.empresariosagrupados.es/

= E1
+ TMA-EL-CS-CBT-0102

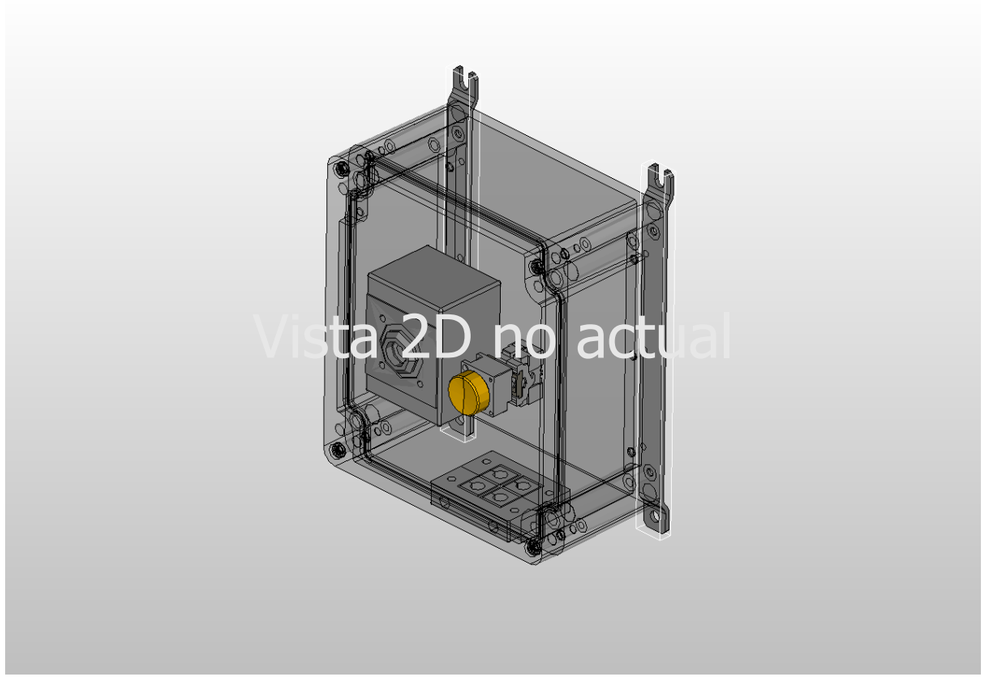

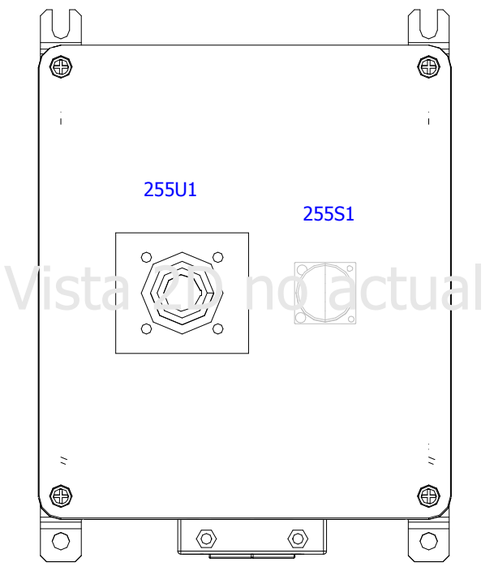

+TMA-PI-CS-CBT-0101/001 ▷

IK4 TEKNIKER Research Alliance
IK4-TEKNIKER
AVDA. OTAOLA 20
20600 Eibar (Gipuzkoa) Spain
Tfno.:(+34) 943 206744
Fax: (+34) 943 202757
Web: www.tekniker.es

Date	15/12/2017						
Reviewed	F.LÓPEZ	2.3	15/12/2017	JOSE MANUEL			
Drew by	JOSE MANUEL	Review	Date	Name	Review	Date	Name

3151_LSST

MCS Design Electrical Schematics

LSST TELESCOPE

Replaces | Replaced by

HANDHELD EL -X

Customer: EMPRESARIOS AGRUPADOS
C/Magallanes, 3
28015 MADRID
91 3098000
http://www.empresariosagrupados.es/

= E1
+ TMA-EL-CS-CBT-0102

Customer

EMPRESARIOS AGRUPADOS

EMPRESARIOS AGRUPADOS

C/Magallanes, 3
28015 MADRID
ESPAÑA
91 3098000

http://www.empresariosagrupados.es/

Project:

3151_LSST

MCS Design Electrical Schematics

LSST TELESCOPE

E1
TMA

TMA-PI-CS-CBT-0101
AUXILIARY AZIMUTH CABLE WRAP BOX PIER

Number of pages: 710

Made by:

IK4 TEKNIKER Research Alliance

IK4-TEKNIKER

AVDA. OTAOLA 20
20600 Eibar (Gipuzkoa) Spain
Tfno. : (+34) 943 206744
Fax : (+34) 943 202757
Web: www.tekniker.es

2.3	VERSION INTERMEDIA PARA MONTAJE ASTURFEITO (SIN EVALUACIONES)	15/12/2017	JOSE MANUEL
Review	Review description	Date	Reviewed

Drew by:	J.M.CASTAÑO
Reviewed:	F.LÓPEZ
Date:	16/12/2015
Replaces:	
Replaced by:	

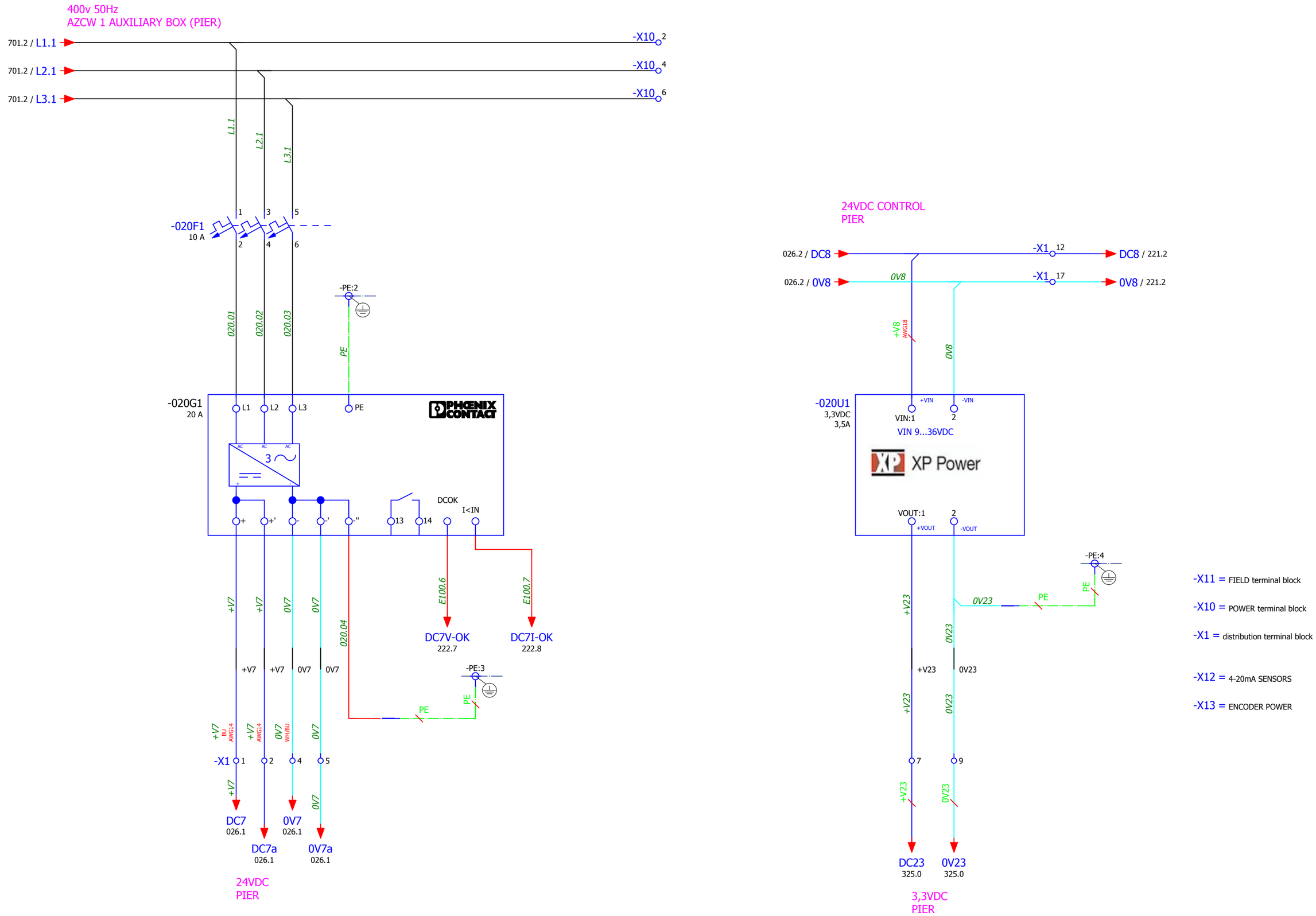

◁ 001

026 ▷

IK4 TEKNIKER Research Alliance	IK4-TEKNIKER AVDA. OTAOLA 20 20600 Eibar (Gipuzkoa) Spain Tfno.:(+34) 943 206744 Fax: (+34) 943 202757 Web: www.tekniker.es									3151_LSST	MCS Design Electrical Schematics LSST TELESCOPE	DC POWER	Customer: EMPRESARIOS AGRUPADOS C/Magallanes, 3 28015 MADRID 91 3098000 http://www.empresariosagrupados.es/	= E1 + TMA-PI-CS-CBT-0101
		Date	14/12/2017										
		Reviewed	F.LÓPEZ	2.3	15/12/2017	JOSE MANUEL							
		Drew by	JOSE MANUEL	Review	Date	Name	Review	Date	Name	Replaces	Replaced by			Page 020 Total number 710

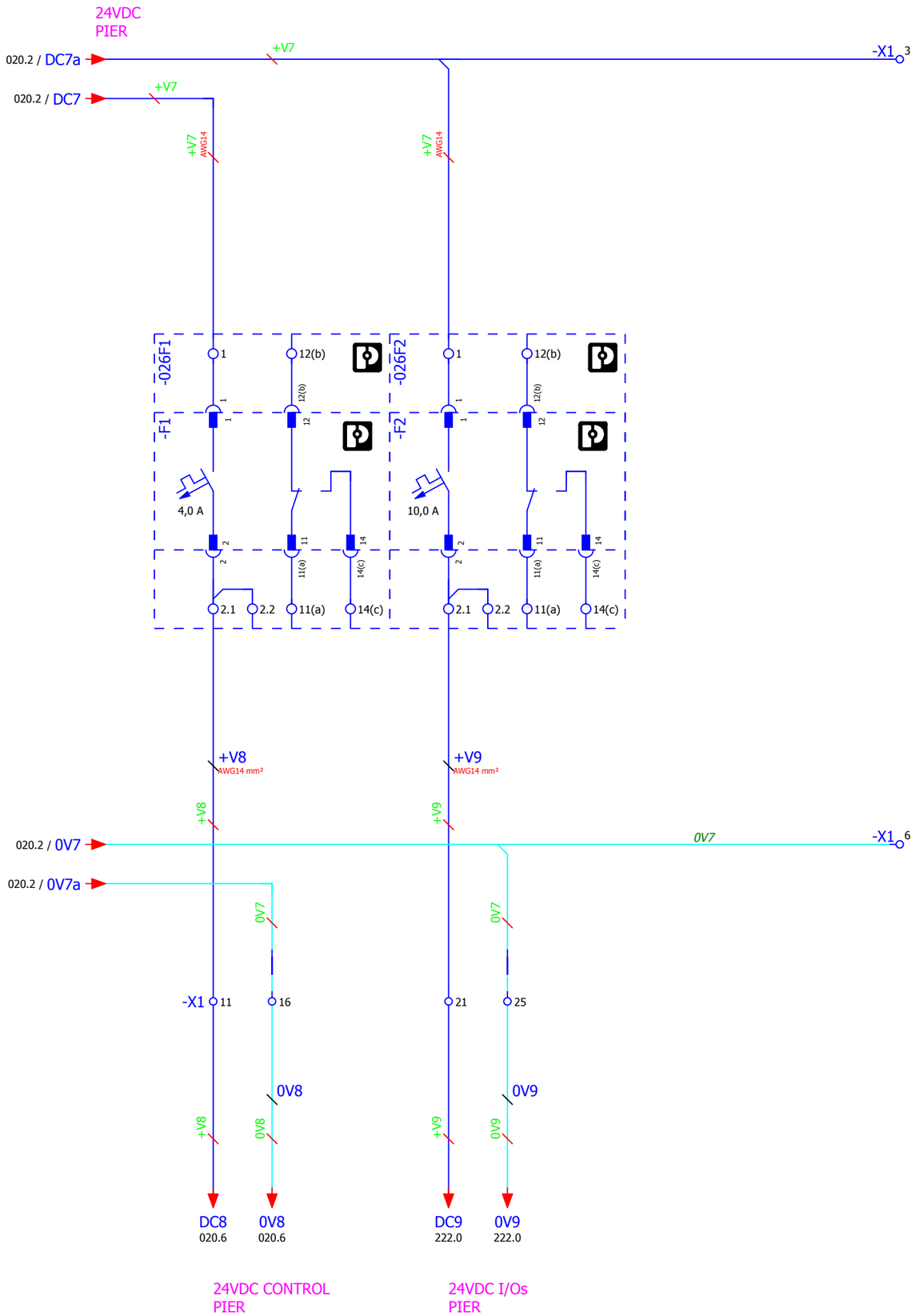

◁ 020

209 ▷

IK4 TEKNIKER Research Alliance	IK4-TEKNIKER AVDA. OTAOLA 20 20600 Eibar (Gipuzkoa) Spain Tfno.:(+34) 943 206744 Fax: (+34) 943 202757 Web: www.tekniker.es								3151_LSST	MCS Design Electrical Schematics LSST TELESCOPE	24 VDC DISTRIBUTION	Customer: EMPRESARIOS AGRUPADOS C/Magallanes, 3 28015 MADRID 91 3098000 http://www.empresariosagrupados.es/	= E1 + TMA-PI-CS-CBT-0101
		Date	14/12/2017										
		Reviewed	F.LÓPEZ	2.3	15/12/2017	JOSE MANUEL							
		Drew by	JOSE MANUEL	Review	Date	Name	Review	Date	Name	Replaces	Replaced by		Page 026 Total number 710

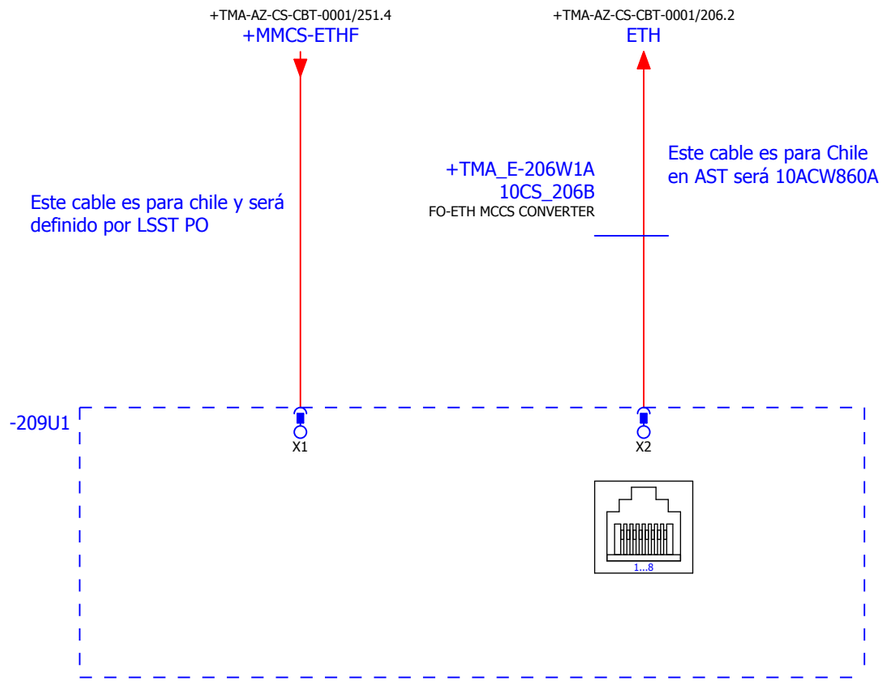

IK4-TEKNIKER
AVDA. OTAOLA 20
20600 Eibar (Gipuzkoa) Spain
Tfno.:(+34) 943 206744
Fax: (+34) 943 202757
Web: www.tekniker.es

Date	15/12/2017						
Reviewed	F.LÓPEZ	2.3	15/12/2017	JOSE MANUEL			
Drew by	JOSE MANUEL	Review	Date	Name	Review	Date	Name

3151_LSST

MCS Design Electrical Schematics

LSST TELESCOPE

Replaces

Replaced by

MMCS OPTICAL FIBER TO CABLE CONVERTER

Customer:

EMPRESARIOS AGRUPADOS
C/Magallanes, 3
28015 MADRID
91 3098000

http://www.empresariosagrupados.es/

= E1

+ TMA-PI-CS-CBT-0101

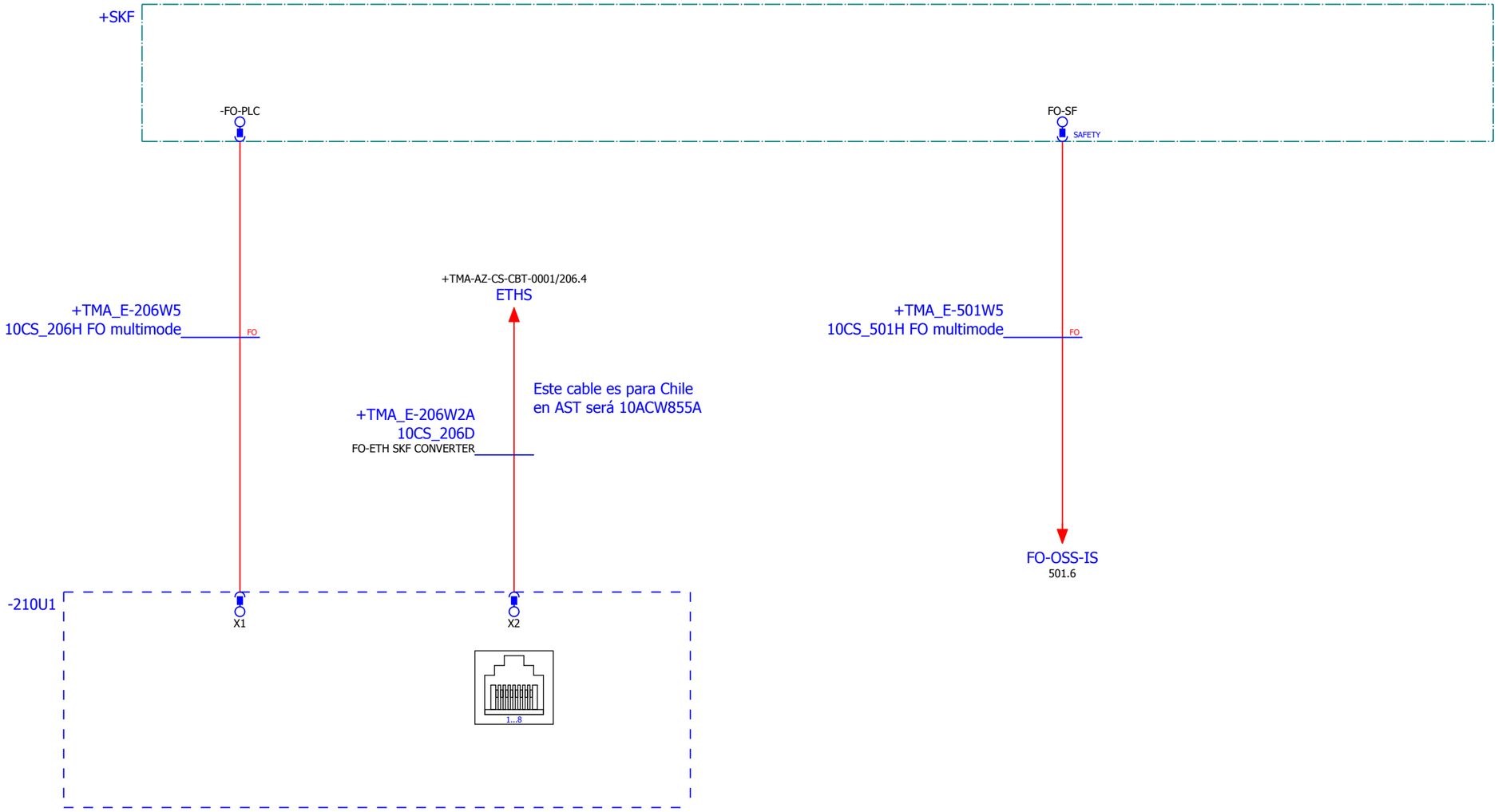

IK4 TEKNIKER Research Alliance
IK4-TEKNIKER
AVDA. OTAOLA 20
20600 Eibar (Gipuzkoa) Spain
Tfno.:(+34) 943 206744
Fax: (+34) 943 202757
Web: www.tekniker.es

Date	15/12/2017						
Reviewed	F.LÓPEZ	2.3	15/12/2017	JOSE MANUEL			
Drew by	JOSE MANUEL	Review	Date	Name	Review	Date	Name

3151_LSST

MCS Design Electrical Schematics

LSST TELESCOPE

Replaces

Replaced by

SKF OPTICAL FIBER TO CABLE CONVERTER

Customer:

EMPRESARIOS AGRUPADOS

C/Magallanes, 3
28015 MADRID
91 3098000

http://www.empresariosagrupados.es/

= E1

+ TMA-PI-CS-CBT-0101

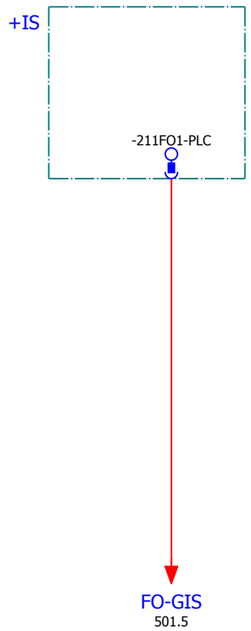

◁ 210

220 ▷

IK4-TEKNIKER
AVDA. OTAOLA 20
20600 Eibar (Gipuzkoa) Spain
Tfno.:(+34) 943 206744
Fax: (+34) 943 202757
Web: www.tekniker.es

Date	14/12/2017						
Reviewed	F.LÓPEZ	2.3	15/12/2017	JOSE MANUEL			
Drew by	JOSE MANUEL	Review	Date	Name	Review	Date	Name

3151_LSST

MCS Design Electrical Schematics

LSST TELESCOPE

Replaces | Replaced by

IS OPTICAL FIBER TO CABLE CONVERTER

Customer: EMPRESARIOS AGRUPADOS
C/Magallanes, 3
28015 MADRID
91 3098000
http://www.empresariosagrupados.es/

= E1
+ TMA-PI-CS-CBT-0101

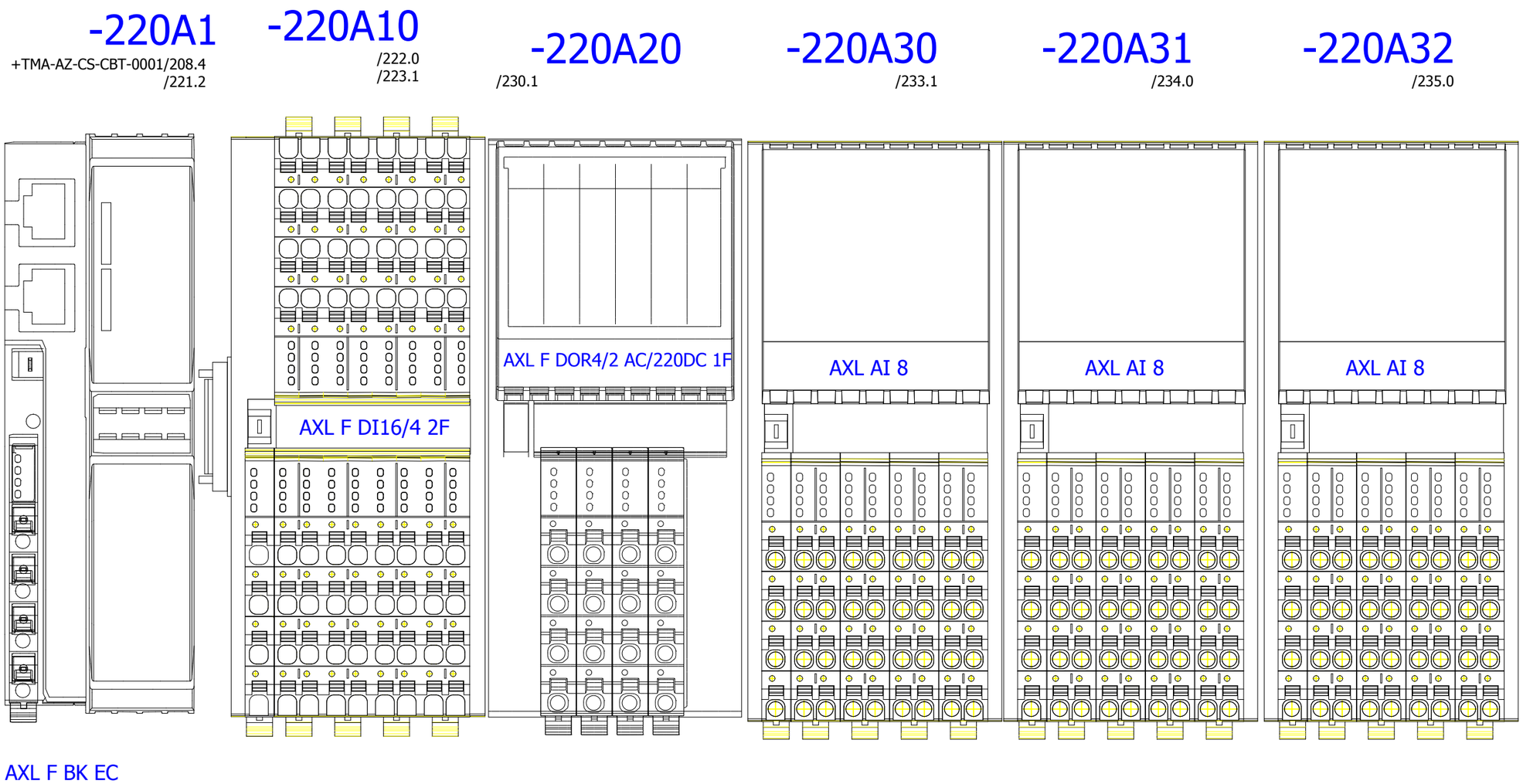

IK4 TEKNIKER Research Alliance

IK4-TEKNIKER
AVDA. OTAOLA 20
20600 Eibar (Gipuzkoa) Spain
Tfno.:(+34) 943 206744
Fax: (+34) 943 202757
Web: www.tekniker.es

Date	23/02/2017						
Reviewed	F.LÓPEZ	2.3	15/12/2017	JOSE MANUEL			
Drew by	jcastano	Review	Date	Name	Review	Date	Name

3151_LSST — MCS Design Electrical Schematics

LSST TELESCOPE

Replaces | Replaced by

DISTRIBUTED IOs

Customer: EMPRESARIOS AGRUPADOS
C/Magallanes, 3
28015 MADRID
91 3098000
http://www.empresariosagrupados.es/

= E1

+ TMA-PI-CS-CBT-0101

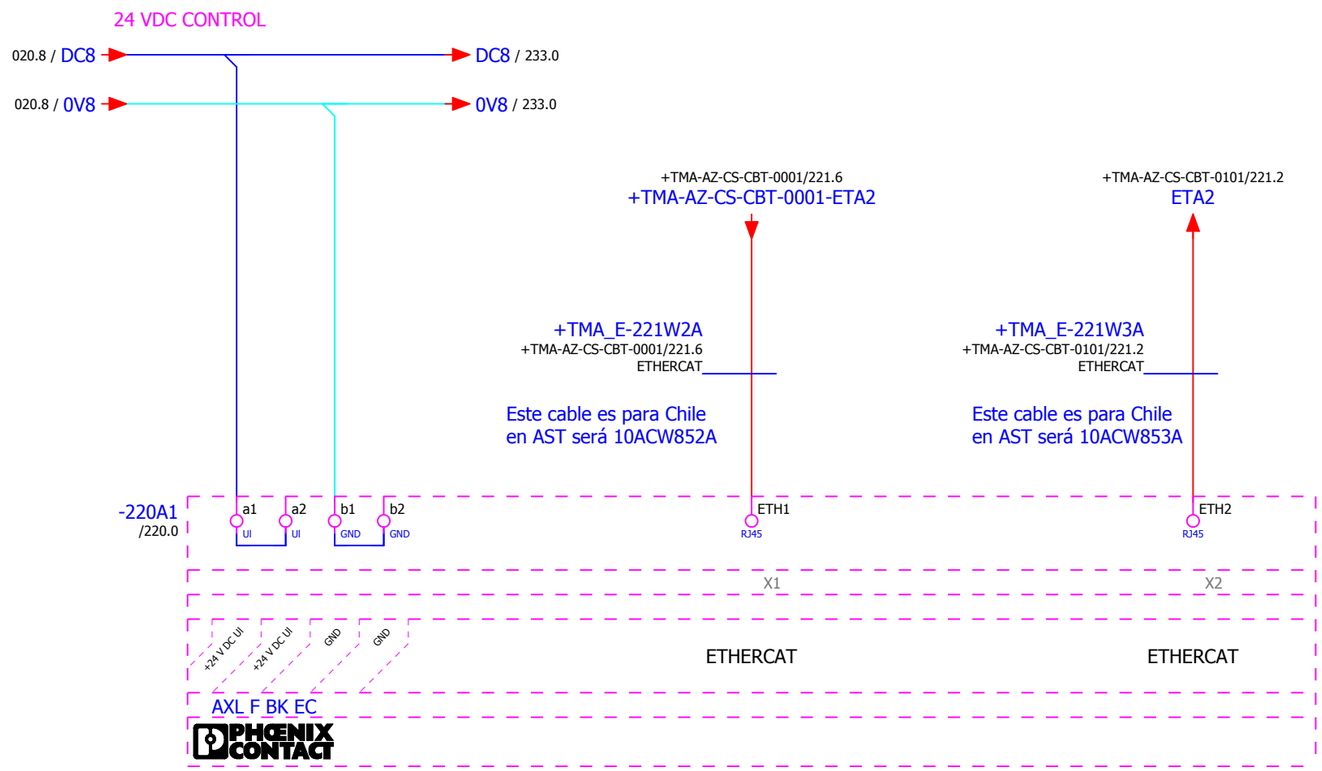

IK4 TEKNIKER Research Alliance

IK4-TEKNIKER
AVDA. OTAOLA 20
20600 Eibar (Gipuzkoa) Spain
Tfno.:(+34) 943 206744
Fax: (+34) 943 202757
Web: www.tekniker.es

Date	15/12/2017						
Reviewed	F.LÓPEZ	2.3	15/12/2017	JOSE MANUEL			
Drew by	JOSE MANUEL	Review	Date	Name	Review	Date	Name

3151_LSST

MCS Design Electrical Schematics

LSST TELESCOPE

Replaces | Replaced by

DISTRIBUTED IOs POWER & ETHERCAT

Customer: EMPRESARIOS AGRUPADOS
C/Magallanes, 3
28015 MADRID
91 3098000
http://www.empresariosagrupados.es/

= E1

+ TMA-PI-CS-CBT-0101

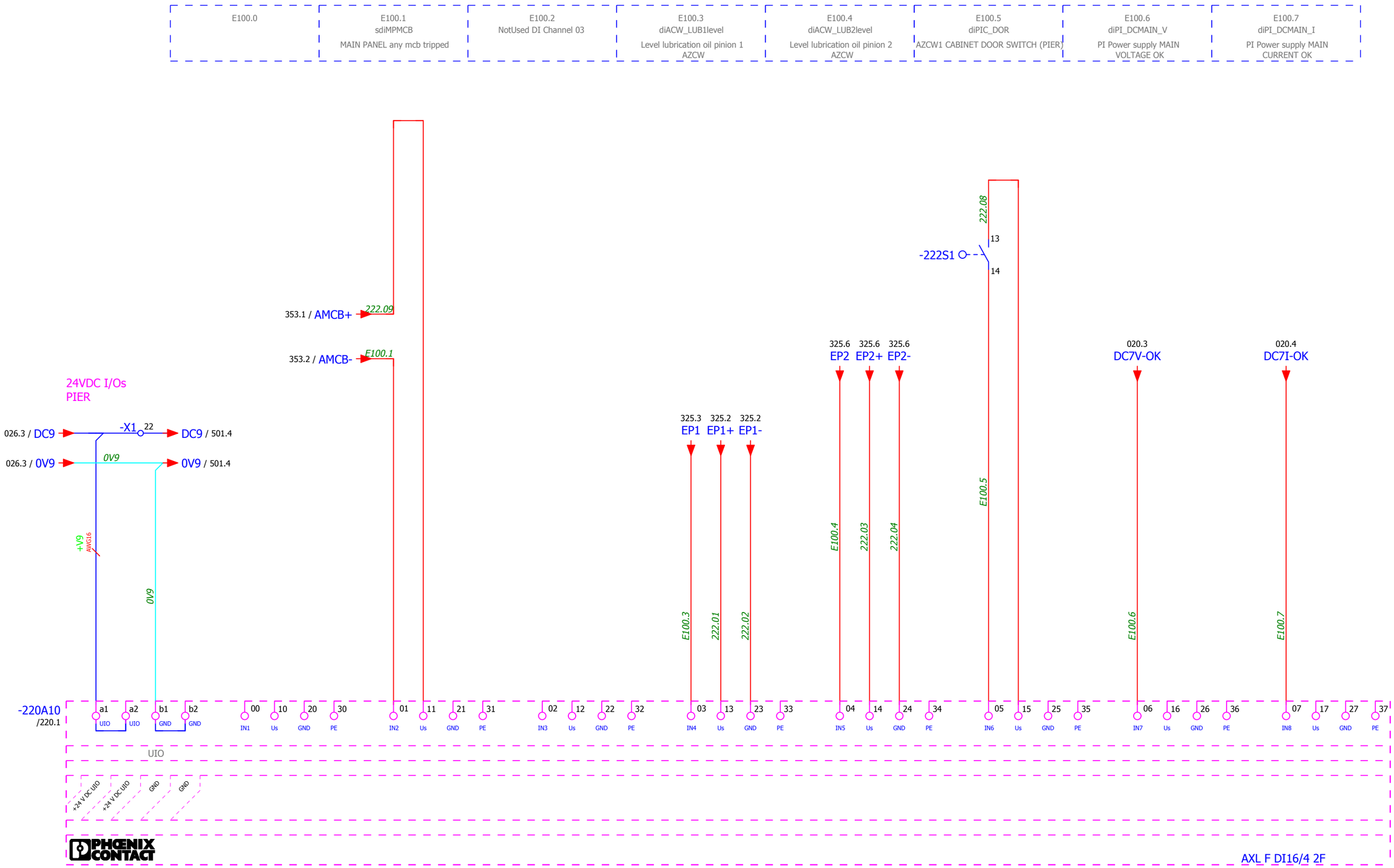

IK4 TEKNIKER Research Alliance
IK4-TEKNIKER
AVDA. OTAOLA 20
20600 Eibar (Gipuzkoa) Spain
Tfno.:(+34) 943 206744
Fax: (+34) 943 202757
Web: www.tekniker.es

Date	14/12/2017						
Reviewed	F.LÓPEZ	2.3	15/12/2017	JOSE MANUEL			
Drew by	JOSE MANUEL	Review	Date	Name	Review	Date	Name

3151_LSST
MCS Design Electrical Schematics
LSST TELESCOPE

Replaces | Replaced by

DISTRIBUTED DIGITAL INPUT MODULE

Customer: EMPRESARIOS AGRUPADOS
C/Magallanes, 3
28015 MADRID
91 3098000
http://www.empresariosagrupados.es/

= E1
+ TMA-PI-CS-CBT-0101

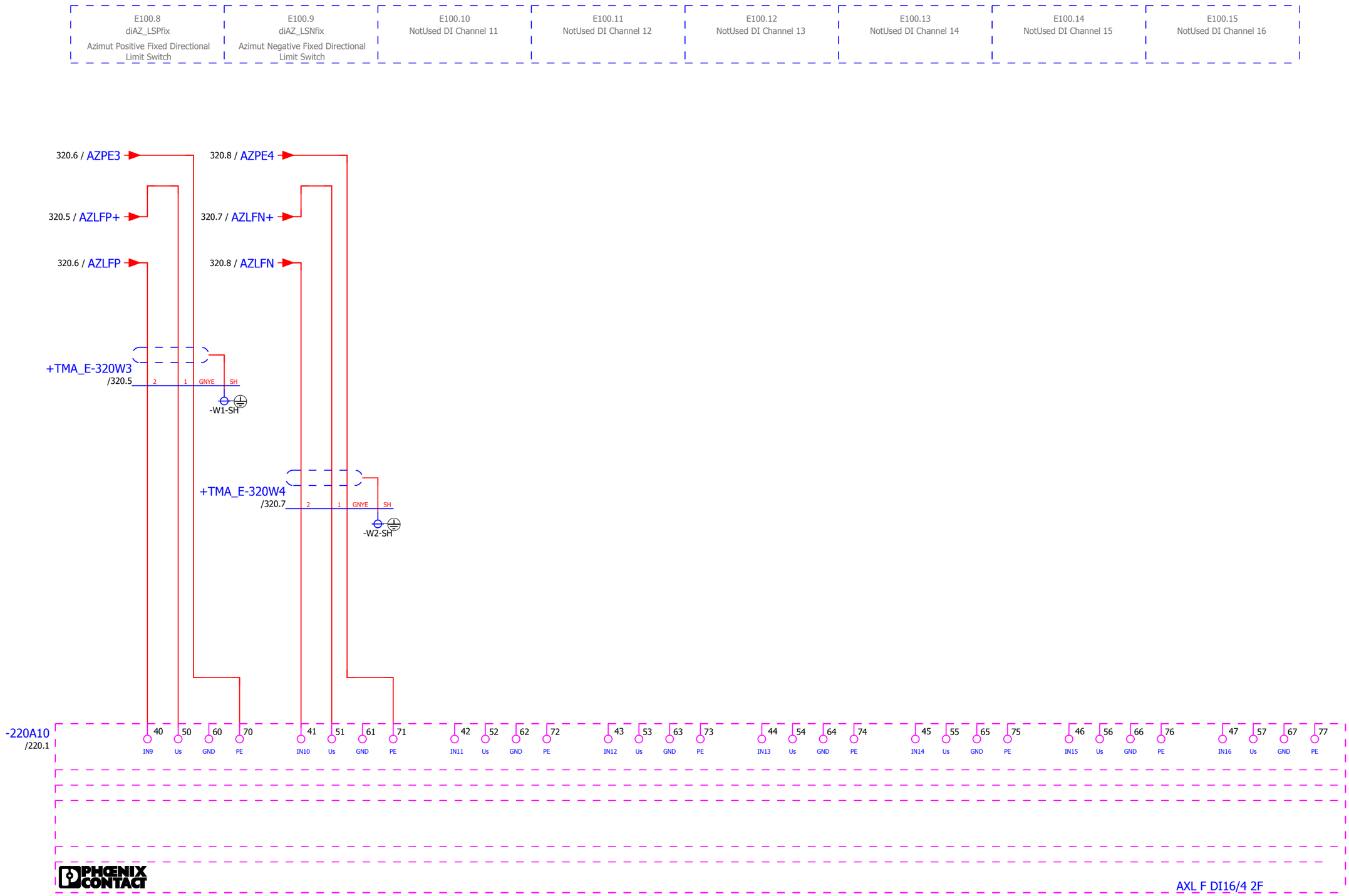

IK4 TEKNIKER Research Alliance

IK4-TEKNIKER
AVDA. OTAOLA 20
20600 Eibar (Gipuzkoa) Spain
Tfno.:(+34) 943 206744
Fax: (+34) 943 202757
Web: www.tekniker.es

Date	15/12/2017						
Reviewed	F.LÓPEZ	2.3	15/12/2017	JOSE MANUEL			
Drew by	JOSE MANUEL	Review	Date	Name	Review	Date	Name

3151_LSST

MCS Design Electrical Schematics

LSST TELESCOPE

Replaces | Replaced by

DISTRIBUTED DIGITAL INPUT MODULE

Customer: EMPRESARIOS AGRUPADOS

C/Magallanes, 3
28015 MADRID
91 3098000
http://www.empresariosagrupados.es/

= E1

+ TMA-PI-CS-CBT-0101

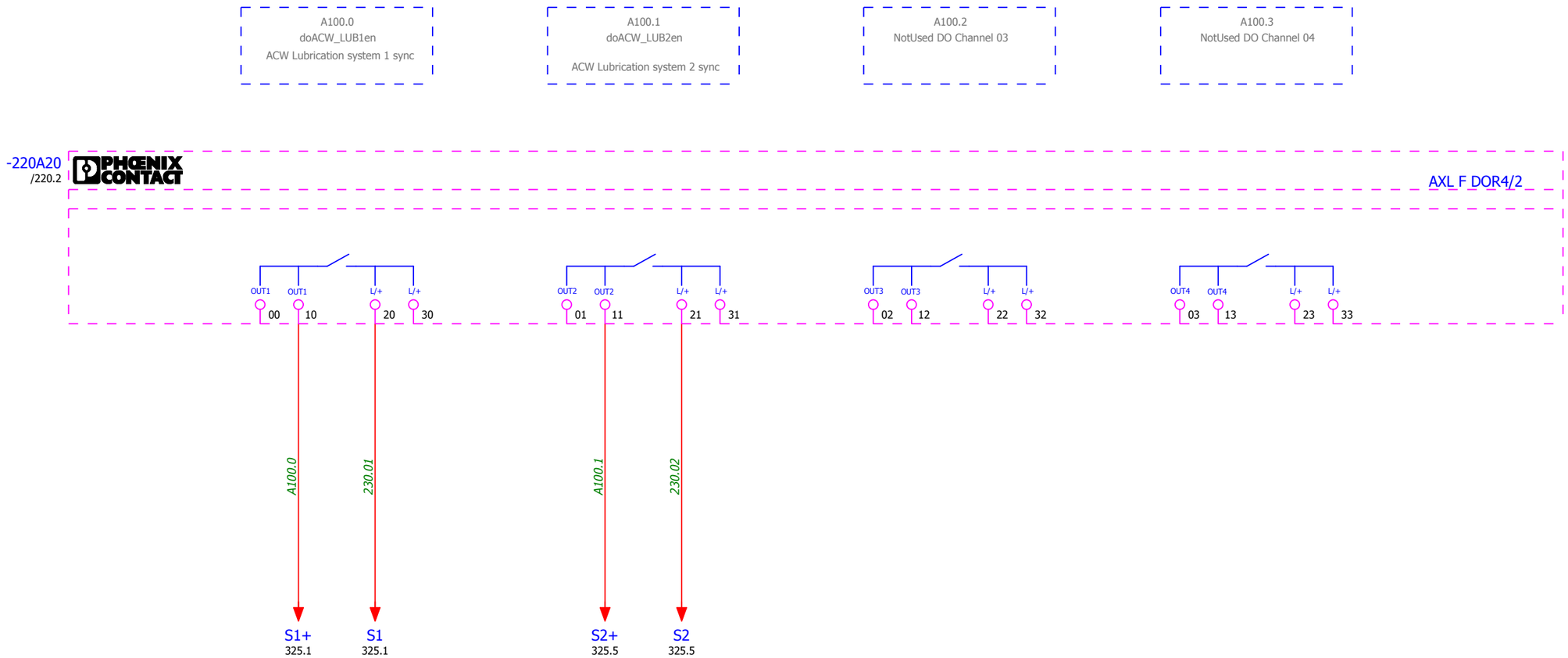

IK4 TEKNIKER Research Alliance
IK4-TEKNIKER
AVDA. OTAOLA 20
20600 Eibar (Gipuzkoa) Spain
Tfno.:(+34) 943 206744
Fax: (+34) 943 202757
Web: www.tekniker.es

Date	12/06/2017						
Reviewed	F.LÓPEZ	2.3	15/12/2017	JOSE MANUEL			
Drew by	JOSE MANUEL	Review	Date	Name	Review	Date	Name

3151_LSST
MCS Design Electrical Schematics
LSST TELESCOPE

Replaces | Replaced by

DISTRIBUTED DIGITAL OUTPUT MODULE

Customer:
EMPRESARIOS AGRUPADOS
C/Magallanes, 3
28015 MADRID
91 3098000
http://www.empresariosagrupados.es/

= E1
+ TMA-PI-CS-CBT-0101

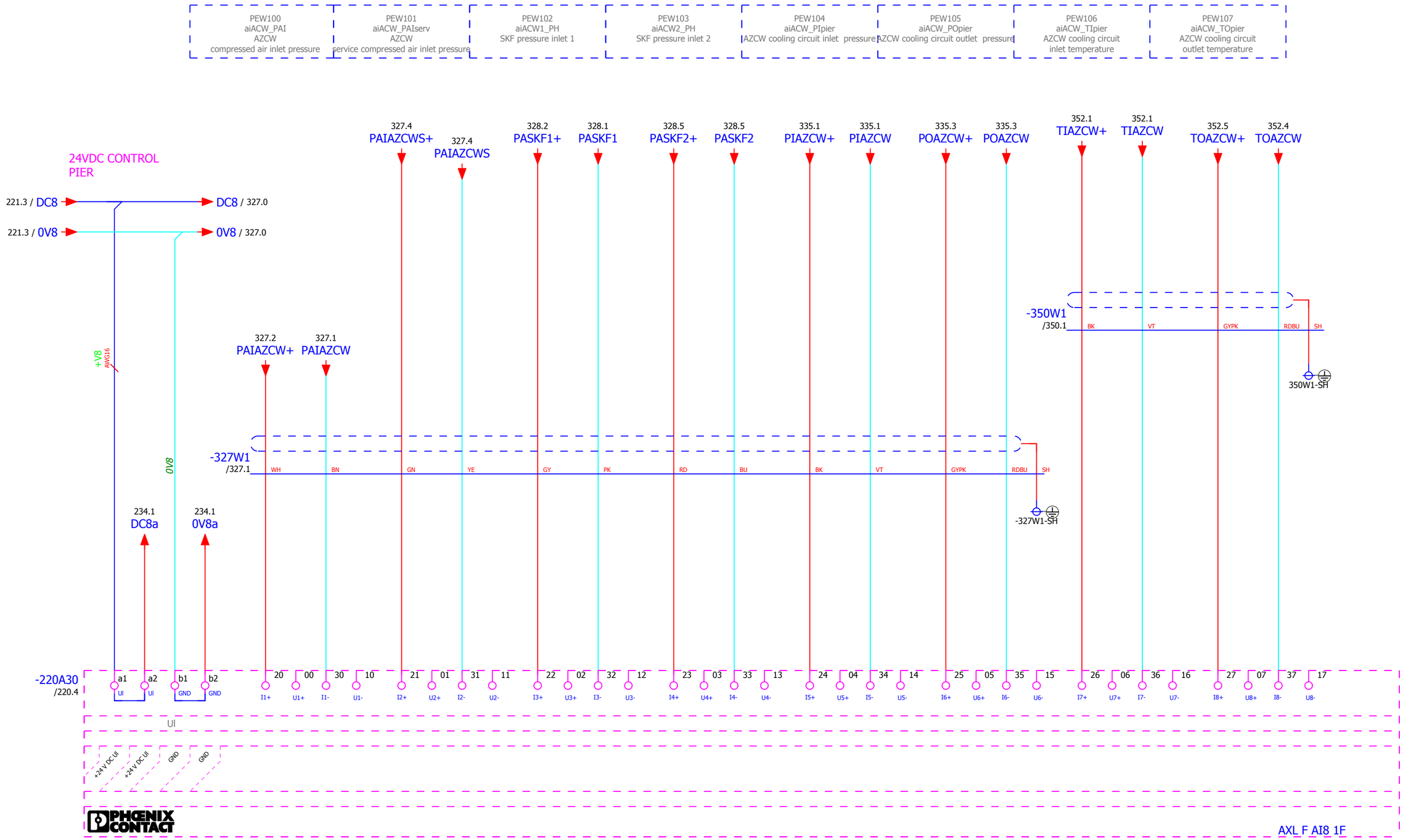

IK4 TEKNIKER Research Alliance

IK4-TEKNIKER
AVDA. OTAOLA 20
20600 Eibar (Gipuzkoa) Spain
Tfno.:(+34) 943 206744
Fax: (+34) 943 202757
Web: www.tekniker.es

Date	15/12/2017						
Reviewed	F.LÓPEZ	2.3	15/12/2017	JOSE MANUEL			
Drew by	JOSE MANUEL	Review	Date	Name	Review	Date	Name

3151_LSST

MCS Design Electrical Schematics

LSST TELESCOPE

Replaces | Replaced by

DISTRIBUTED ANALOG INPUT MODULE

Customer: EMPRESARIOS AGRUPADOS
C/Magallanes, 3
28015 MADRID
91 3098000
http://www.empresariosagrupados.es/

= E1

+ TMA-PI-CS-CBT-0101

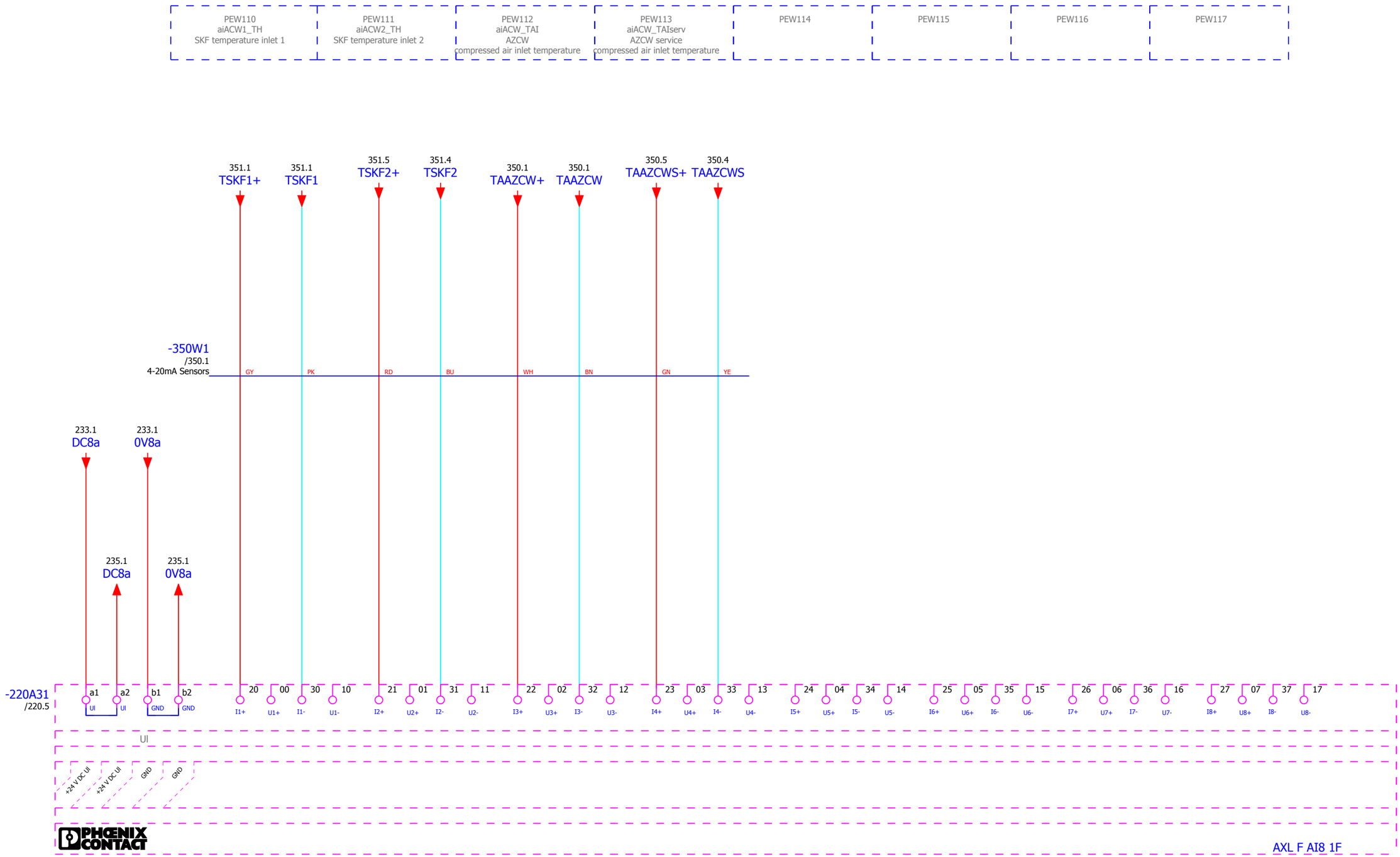

IK4 TEKNIKER Research Alliance	IK4-TEKNIKER AVDA. OTAOLA 20 20600 Eibar (Gipuzkoa) Spain Tfno.:(+34) 943 206744 Fax: (+34) 943 202757 Web: www.tekniker.es								3151_LSST	MCS Design Electrical Schematics LSST TELESCOPE	DISTRIBUTED ANALOG INPUT MODULE	Customer: EMPRESARIOS AGRUPADOS C/Magallanes, 3 28015 MADRID 91 3098000 http://www.empresariosagrupados.es/	= E1 + TMA-PI-CS-CBT-0101
		Date	14/12/2017										
		Reviewed	F.LÓPEZ	2.3	15/12/2017	JOSE MANUEL							
		Drew by	JOSE MANUEL	Review	Date	Name	Review	Date	Name	Replaces	Replaced by		Page 234 Total number 710

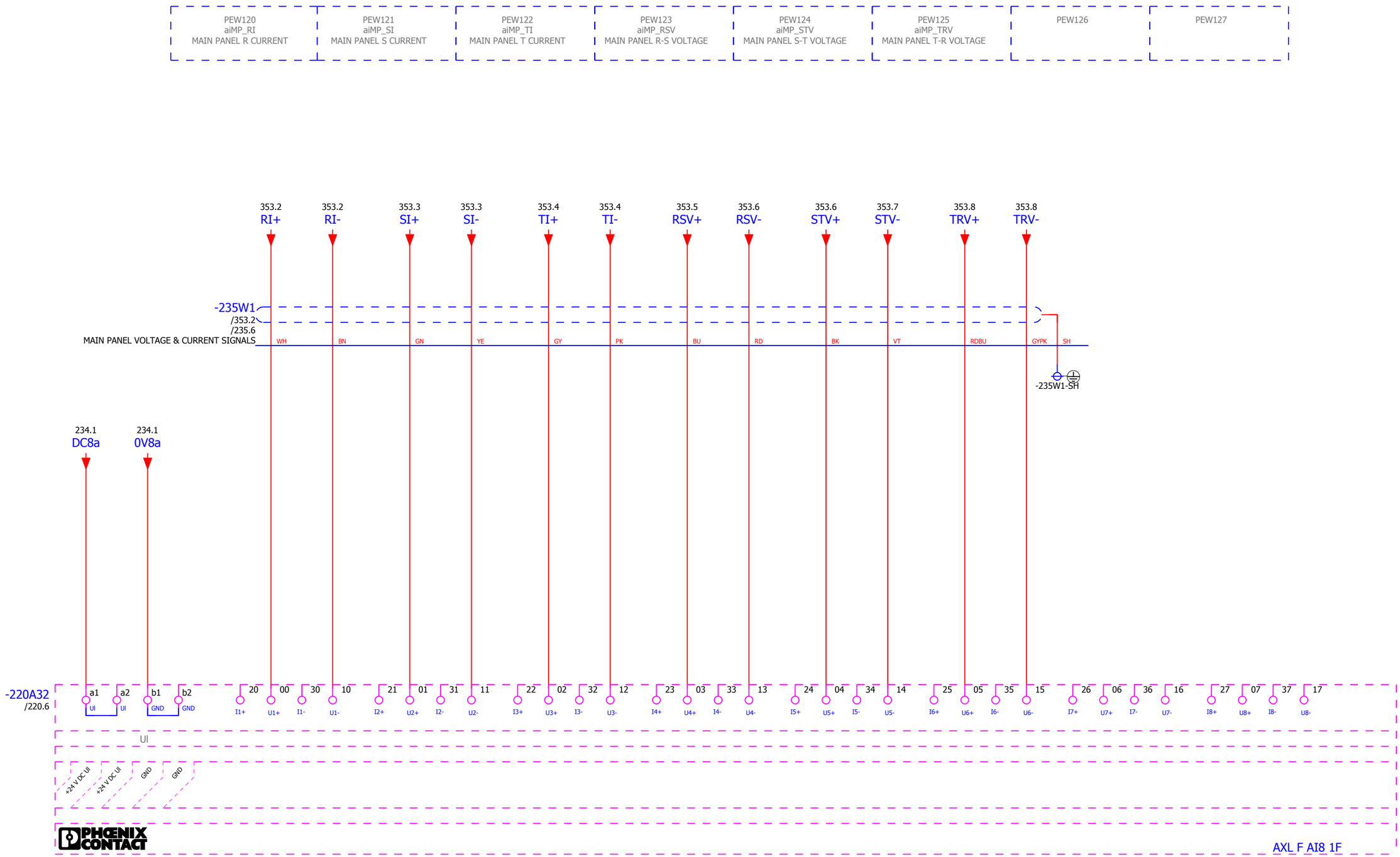

IK4 TEKNIKER Research Alliance	IK4-TEKNIKER AVDA. OTAOLA 20 20600 Eibar (Gipuzkoa) Spain Tfno.:(+34) 943 206744 Fax: (+34) 943 202757 Web: www.tekniker.es								3151_LSST	MCS Design Electrical Schematics LSST TELESCOPE	DISTRIBUTED ANALOG INPUT MODULE	Customer: EMPRESARIOS AGRUPADOS C/Magallanes, 3 28015 MADRID 91 3098000 http://www.empresariosagrupados.es/	= E1 + TMA-PI-CS-CBT-0101
		Date	14/12/2017										
		Reviewed	F.LÓPEZ	2.3	15/12/2017	JOSE MANUEL							
		Drew by	JOSE MANUEL	Review	Date	Name	Review	Date	Name	Replaces	Replaced by		Page 235 Total number 710

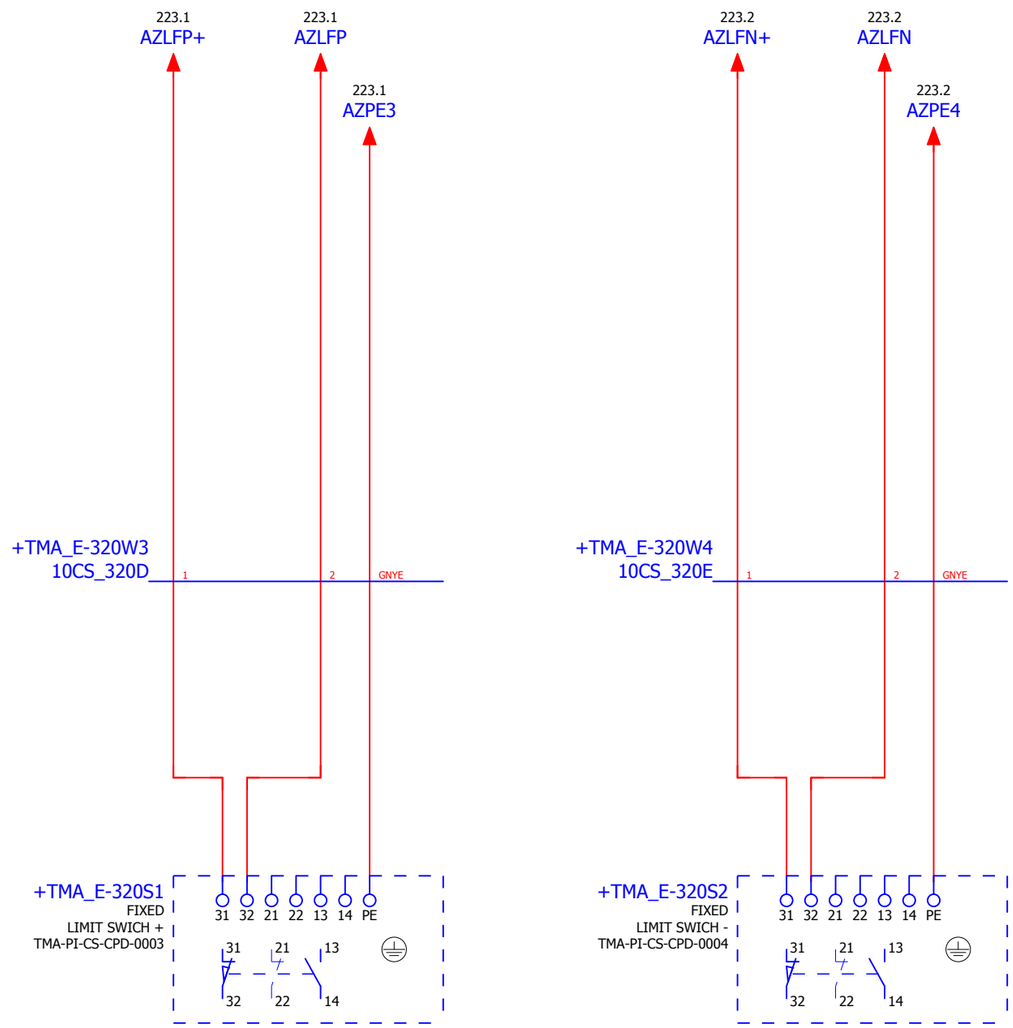

IK4 TEKNIKER Research Alliance

IK4-TEKNIKER
AVDA. OTAOLA 20
20600 Eibar (Gipuzkoa) Spain
Tfno.:(+34) 943 206744
Fax: (+34) 943 202757
Web: www.tekniker.es

Date	15/12/2017						
Reviewed	F.LÓPEZ	2.3	15/12/2017	JOSE MANUEL			
Drew by	JOSE MANUEL	Review	Date	Name	Review	Date	Name

3151_LSST

MCS Design Electrical Schematics

LSST TELESCOPE

Replaces

Replaced by

AZIMUTH AXIS LIMIT SWICHES

Customer:

EMPRESARIOS AGRUPADOS

C/Magallanes, 3
28015 MADRID
91 3098000

http://www.empresariosagrupados.es/

= E1

+ TMA-PI-CS-CBT-0101

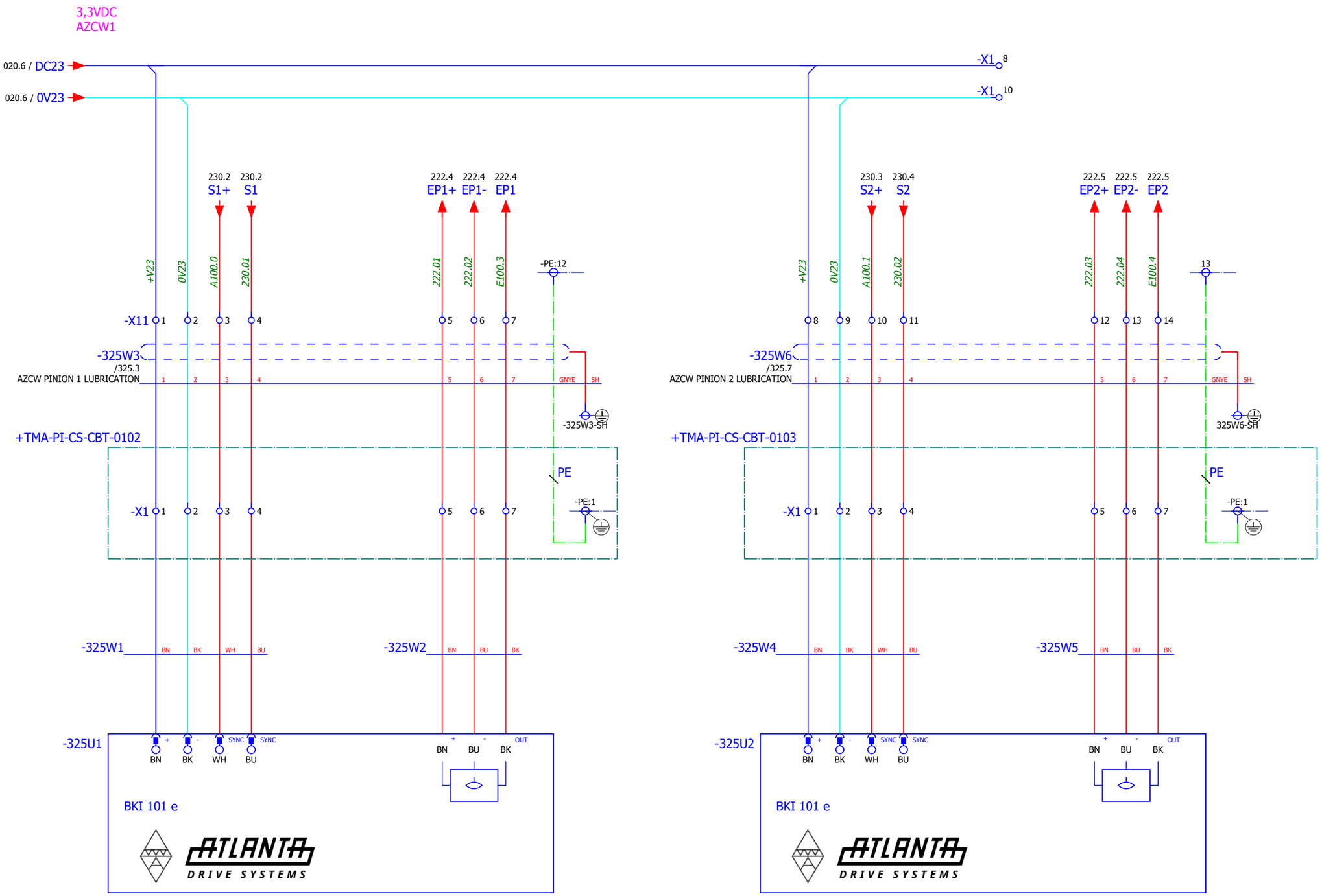

AZIMUTH CABLE WRAP
PINION 1 LUBRICACION

AZIMUTH CABLE WRAP
PINION 2 LUBRICATION

IK4 TEKNIKER Research Alliance
IK4-TEKNIKER
AVDA. OTAOLA 20
20600 Eibar (Gipuzkoa) Spain
Tfno.:(+34) 943 206744
Fax: (+34) 943 202757
Web: www.tekniker.es

Date	12/06/2017						
Reviewed	F.LÓPEZ	2.3	15/12/2017	JOSE MANUEL			
Drew by	JOSE MANUEL	Review	Date	Name	Review	Date	Name

3151_LSST
MCS Design Electrical Schematics
LSST TELESCOPE

Replaces | Replaced by

PINION LUBRICATION

Customer: EMPRESARIOS AGRUPADOS
C/Magallanes, 3
28015 MADRID
91 3098000
http://www.empresariosagrupados.es/

= E1
+ TMA-PI-CS-CBT-0101

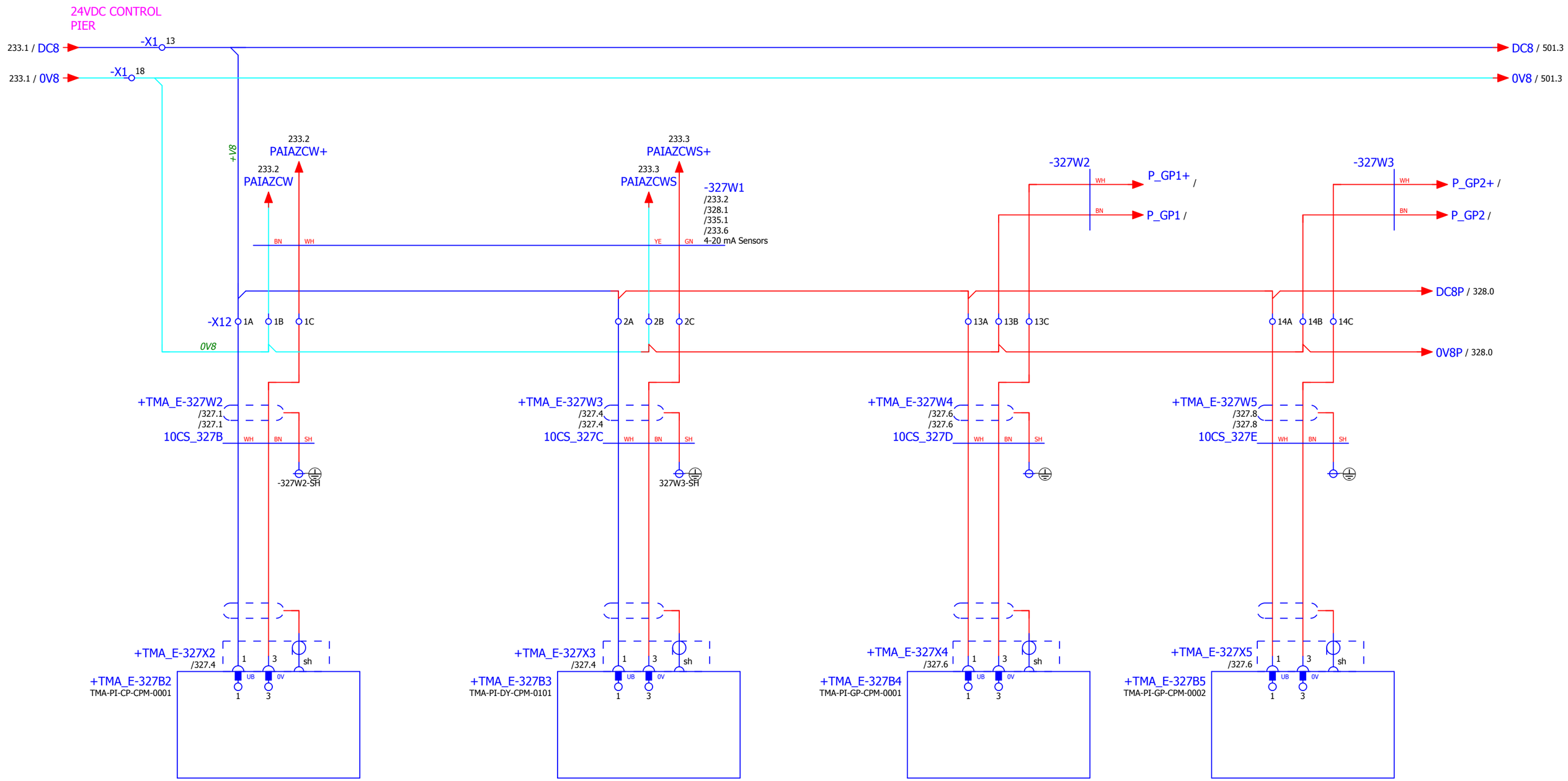

TBD SENSOR:
TIPO DE SENSOR Y CONEXION
SENSOR REPRESENTADO 4-20mA
TECNICA DE CONEXION A 2 HILOS
CONECTOR M12 4 PIN

+TMA_E-327X2 = SHIELDED M12 4 PIN
AZCW compressed air inlet pressure

+TMA_E-327X3 = SHIELDED M12 4 PIN
AZCW Dynalen supply pressure

+TMA_E-327X4 = SHIELDED M12 4 PIN
GP1 PRESSURE

+TMA_E-327X5 = SHIELDED M12 4 PIN
GP2 PRESSURE

IK4 TEKNIKER Research Alliance
IK4-TEKNIKER
AVDA. OTAOLA 20
20600 Eibar (Gipuzkoa) Spain
Tfno.:(+34) 943 206744
Fax: (+34) 943 202757
Web: www.tekniker.es

Date	15/12/2017						
Reviewed	F.LÓPEZ	2.3	15/12/2017	JOSE MANUEL			
Drew by	JOSE MANUEL	Review	Date	Name	Review	Date	Name

3151_LSST
MCS Design Electrical Schematics
LSST TELESCOPE
Replaces
Replaced by

AIR PRESSURE SENSORS

Customer: EMPRESARIOS AGRUPADOS
C/Magallanes, 3
28015 MADRID
91 3098000
http://www.empresariosagrupados.es/

= E1
+ TMA-PI-CS-CBT-0101

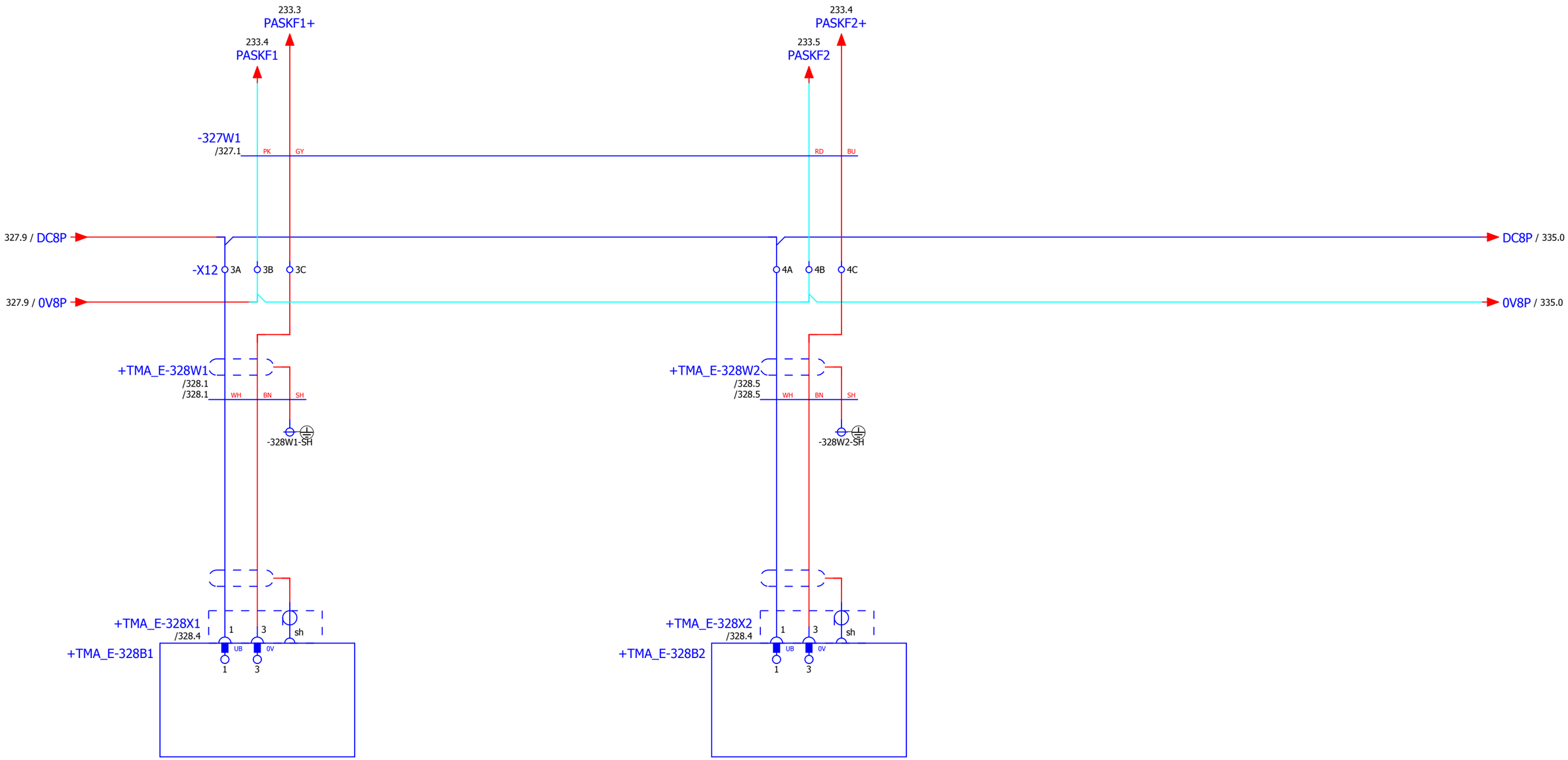

SKF pressure inlet 1

SKF pressure inlet 2

TBD SENSOR:
TIPO DE SENSOR Y CONEXION
SENSOR REPRESENTADO 4-20mA
TECNICA DE CONEXION A 2 HILOS
CONECTOR M12 4 PIN

+TMA_E-328X1 = SHIELDED M12 4 PIN
SKF pressure inlet 1

+TMA_E-328X2 = SHIELDED M12 4 PIN
SKF pressure inlet 2

IK4 TEKNIKER Research Alliance
IK4-TEKNIKER
AVDA. OTAOLA 20
20600 Eibar (Gipuzkoa) Spain
Tfno.:(+34) 943 206744
Fax: (+34) 943 202757
Web: www.tekniker.es

Date	15/12/2017						
Reviewed	F.LÓPEZ	2.3	15/12/2017	JOSE MANUEL			
Drew by	JOSE MANUEL	Review	Date	Name	Review	Date	Name

3151_LSST
MCS Design Electrical Schematics
LSST TELESCOPE

Replaces | Replaced by

SKF PRESSURE SENSORS

Customer: EMPRESARIOS AGRUPADOS
C/Magallanes, 3
28015 MADRID
91 3098000
http://www.empresariosagrupados.es/

= E1
+ TMA-PI-CS-CBT-0101

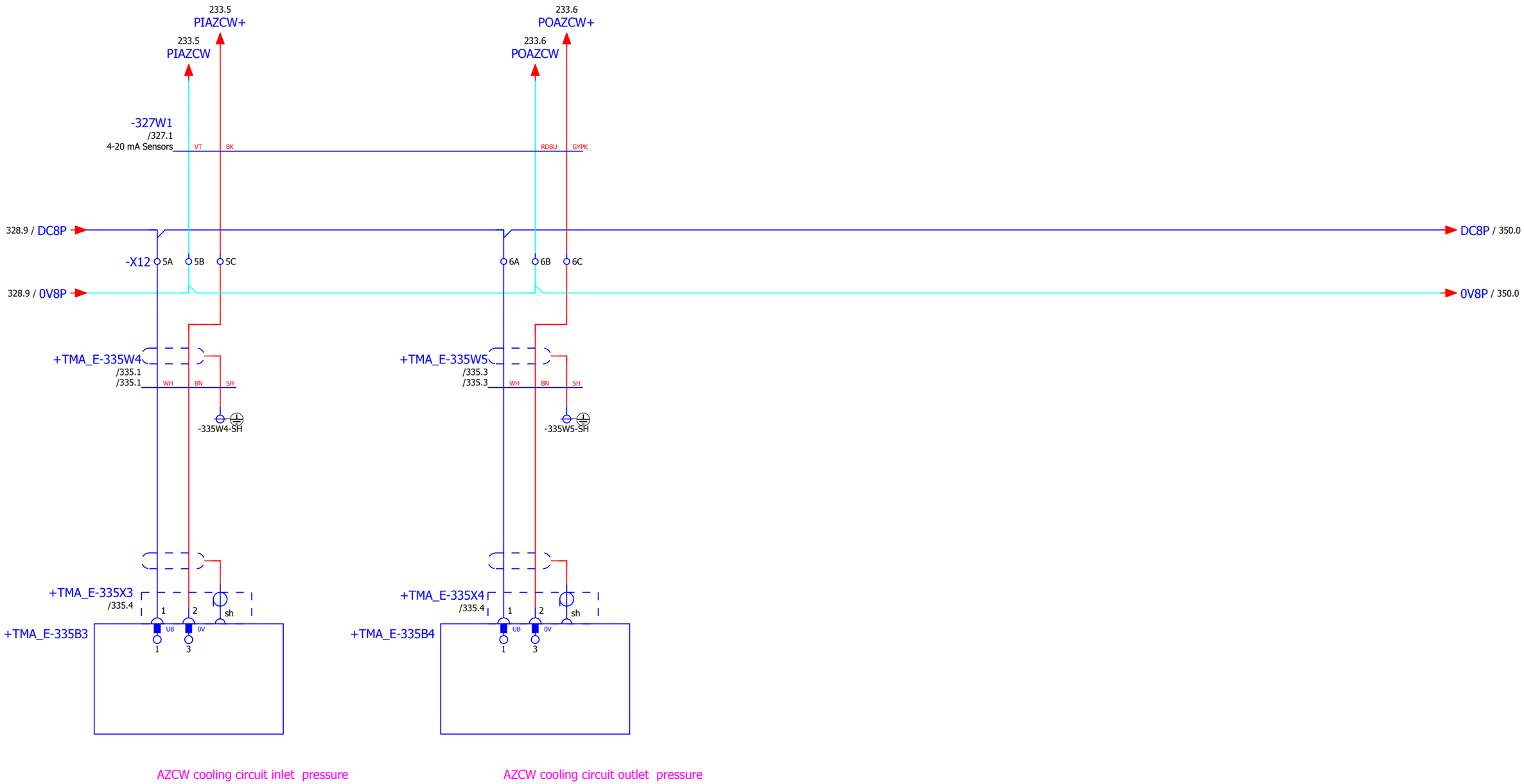

AZCW cooling circuit inlet pressure

AZCW cooling circuit outlet pressure

TBD SENSOR:
TIPO DE SENSOR Y CONEXION
SENSOR REPRESENTADO 4-20mA
TECNICA DE CONEXION A 2 HILOS
CONECTOR M12 4 PIN

+TMA_E-335X3 = SHIELDED M12 4 PIN
AZCW cooling circuit inlet pressure

+TMA_E-335X4 = SHIELDED M12 4 PIN
AZCW cooling circuit outlet pressure

◁ 328

350 ▷

IK4 TEKNIKER Research Alliance
IK4-TEKNIKER
AVDA. OTAOLA 20
20600 Eibar (Gipuzkoa) Spain
Tfno.:(+34) 943 206744
Fax: (+34) 943 202757
Web: www.tekniker.es

Date	15/12/2017						
Reviewed	F.LÓPEZ	2.3	15/12/2017	JOSE MANUEL			
Drew by	JOSE MANUEL	Review	Date	Name	Review	Date	Name

3151_LSST
MCS Design Electrical Schematics
LSST TELESCOPE

Replaces | Replaced by

AZCW COOLING PRESSURE SENSORS

Customer: EMPRESARIOS AGRUPADOS
C/Magallanes, 3
28015 MADRID
91 3098000
http://www.empresariosagrupados.es/

= E1
+ TMA-PI-CS-CBT-0101

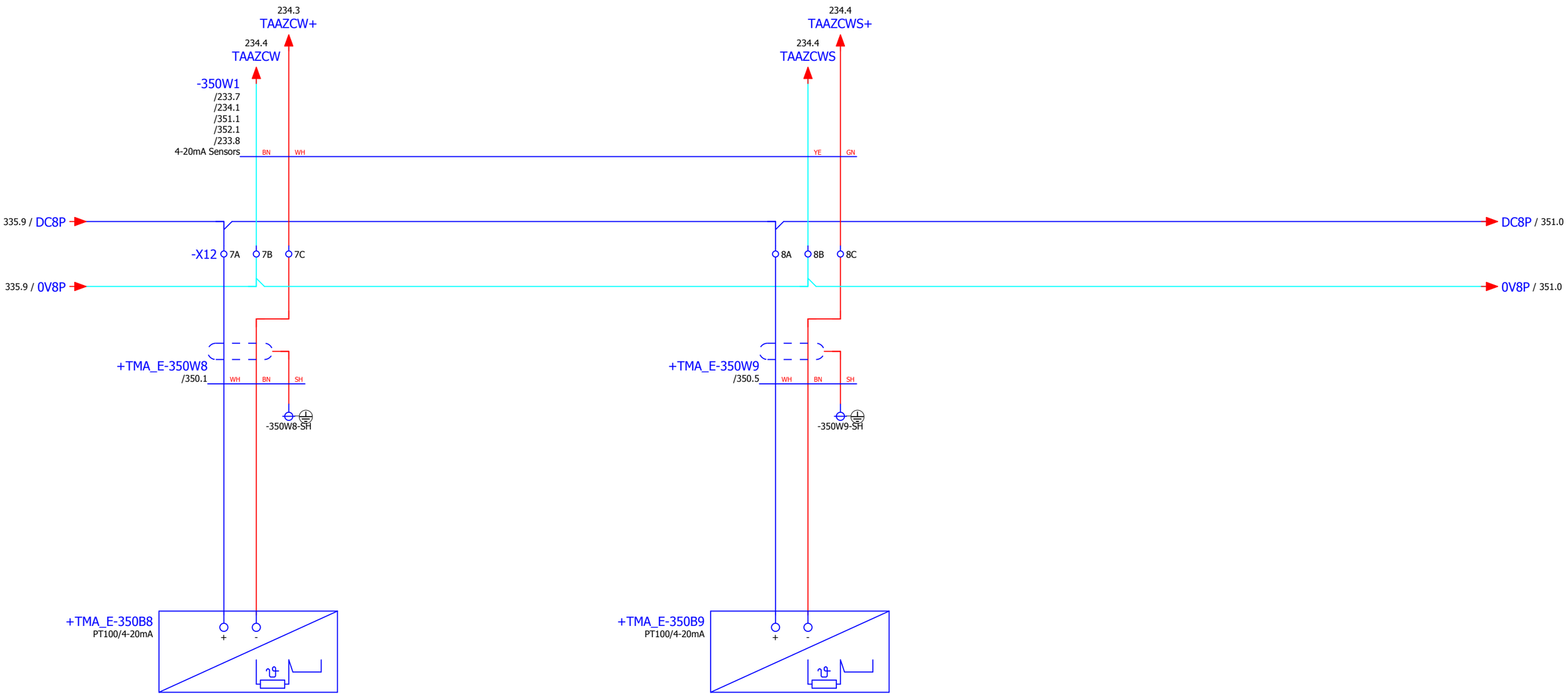

AZCW compressed air inlet temperature

AZCW service compressed air inlet temperature

IK4 TEKNIKER Research Alliance

IK4-TEKNIKER
AVDA. OTAOLA 20
20600 Eibar (Gipuzkoa) Spain
Tfno.:(+34) 943 206744
Fax: (+34) 943 202757
Web: www.tekniker.es

Date	15/12/2017							
Reviewed	F.LÓPEZ	2.3	15/12/2017	JOSE MANUEL				
Drew by	JOSE MANUEL	Review	Date	Name	Review	Date	Name	

3151_LSST

MCS Design Electrical Schematics

LSST TELESCOPE

Replaces

Replaced by

AIR COMPRESSED TEMPERATURE PRESSURE SENSORS

Customer: EMPRESARIOS AGRUPADOS

C/Magallanes, 3
28015 MADRID
91 3098000
http://www.empresariosagrupados.es/

= E1

+ TMA-PI-CS-CBT-0101

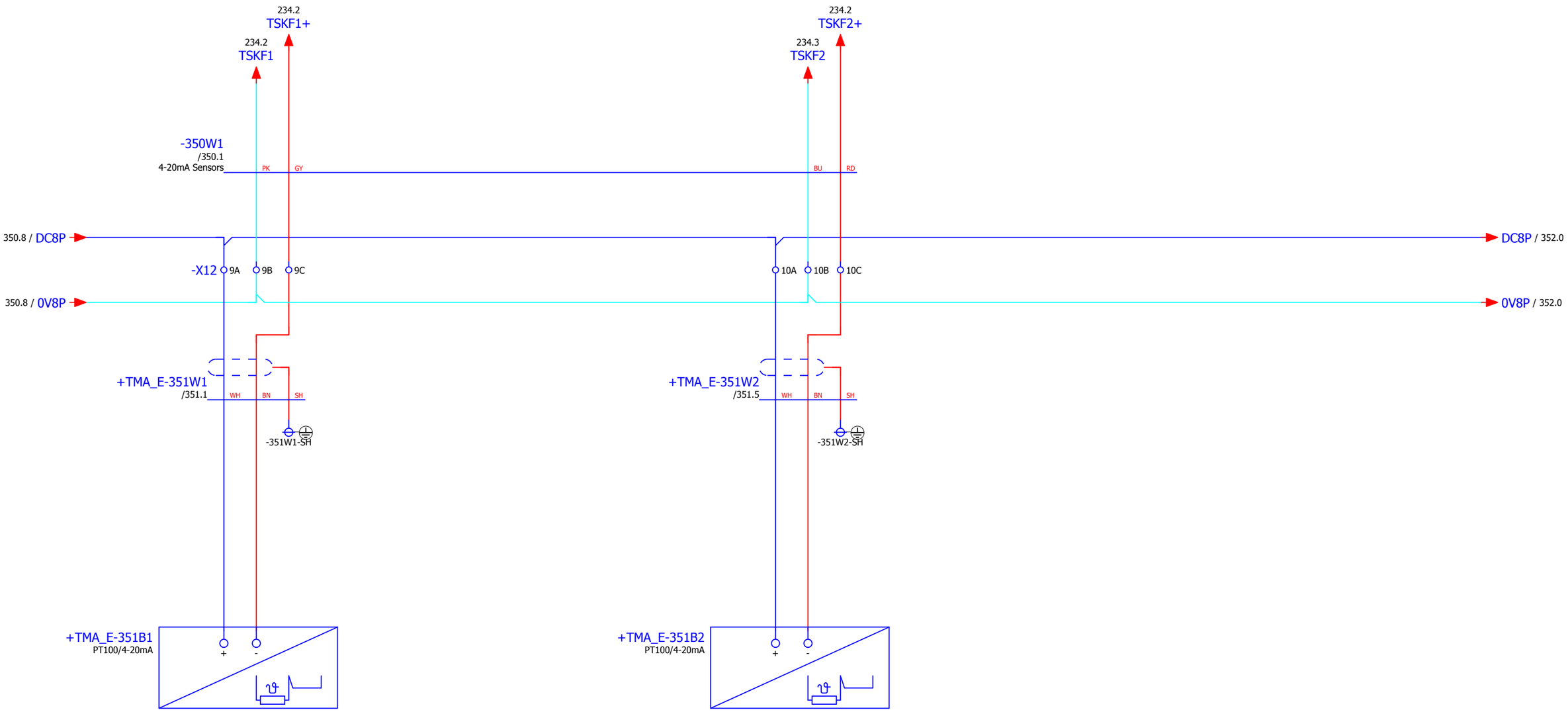

SKF temperature inlet 1

SKF temperature inlet 2

IK4 TEKNIKER Research Alliance

IK4-TEKNIKER
AVDA. OTAOLA 20
20600 Eibar (Gipuzkoa) Spain
Tfno.:(+34) 943 206744
Fax: (+34) 943 202757
Web: www.tekniker.es

Date	15/12/2017							
Reviewed	F.LÓPEZ	2.3	15/12/2017	JOSE MANUEL				
Drew by	JOSE MANUEL	Review	Date	Name	Review	Date	Name	

3151_LSST

MCS Design Electrical Schematics

LSST TELESCOPE

Replaces | Replaced by

SKF TEMPERATURE SENSORS

Customer: EMPRESARIOS AGRUPADOS
C/Magallanes, 3
28015 MADRID
91 3098000
http://www.empresariosagrupados.es/

= E1

+ TMA-PI-CS-CBT-0101

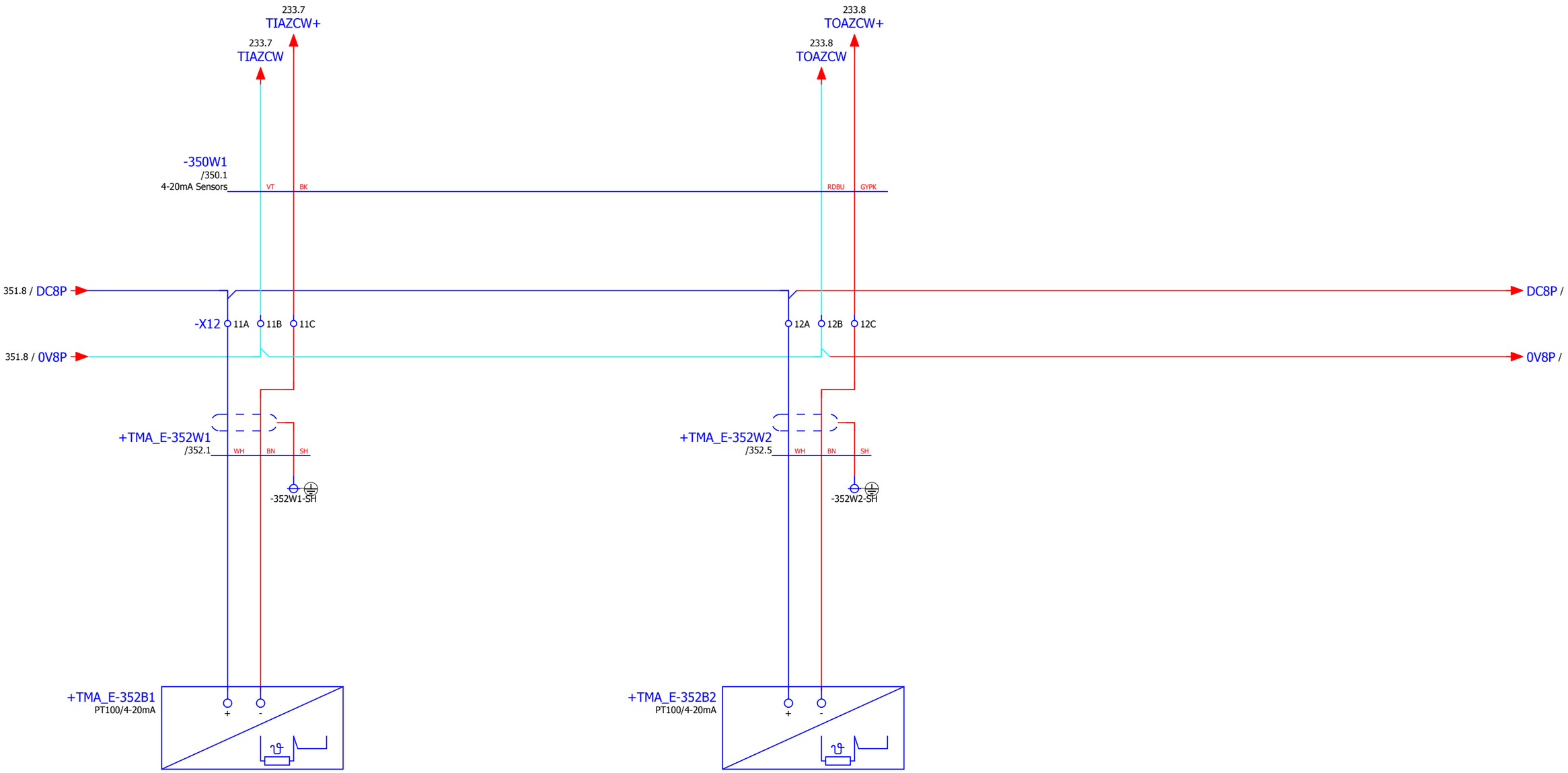

AZCW cooling circuit inlet temeperature

AZCW cooling circuit outlet temeperature

IK4 TEKNIKER Research Alliance
IK4-TEKNIKER
AVDA. OTAOLA 20
20600 Eibar (Gipuzkoa) Spain
Tfno.:(+34) 943 206744
Fax: (+34) 943 202757
Web: www.tekniker.es

Date	15/12/2017							
Reviewed	F.LÓPEZ	2.3	15/12/2017	JOSE MANUEL				
Drew by	JOSE MANUEL	Review	Date	Name	Review	Date	Name	

3151_LSST
MCS Design Electrical Schematics
LSST TELESCOPE

Replaces | Replaced by

AZCW TEMPERATURE SENSORS

Customer: EMPRESARIOS AGRUPADOS
C/Magallanes, 3
28015 MADRID
91 3098000
http://www.empresariosagrupados.es/

= E1
+ TMA-PI-CS-CBT-0101

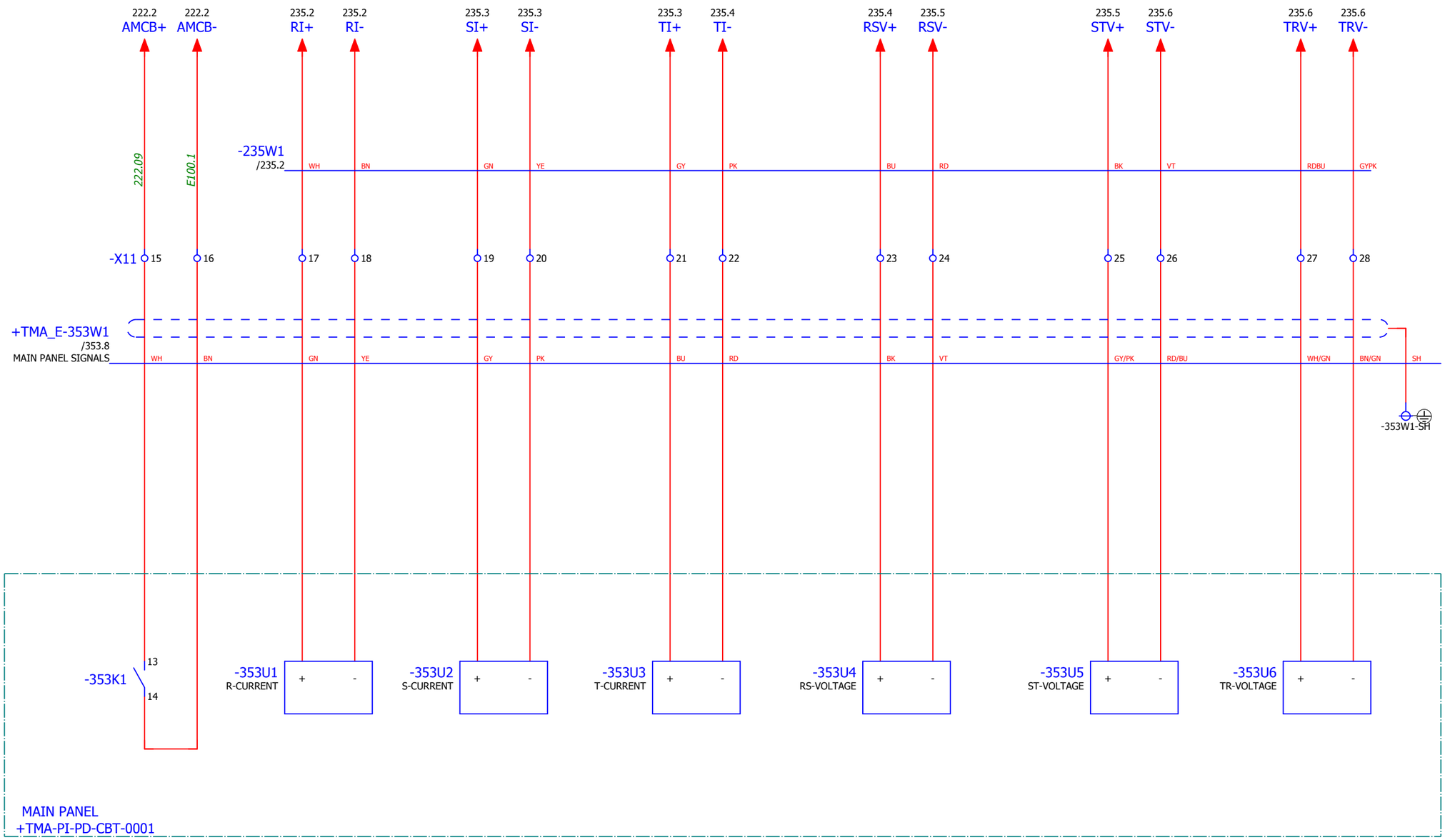

◁ 352

355 ▷

IK4-TEKNIKER
AVDA. OTAOLA 20
20600 Eibar (Gipuzkoa) Spain
Tfno.:(+34) 943 206744
Fax: (+34) 943 202757
Web: www.tekniker.es

Date	15/12/2017						
Reviewed	F.LÓPEZ	2.3	15/12/2017	JOSE MANUEL			
Drew by	JOSE MANUEL	Review	Date	Name	Review	Date	Name

3151_LSST

MCS Design Electrical Schematics

LSST TELESCOPE

Replaces | Replaced by

MAIN PANEL SIGNALS

Customer: EMPRESARIOS AGRUPADOS
C/Magallanes, 3
28015 MADRID
91 3098000
http://www.empresariosagrupados.es/

= E1
+ TMA-PI-CS-CBT-0101

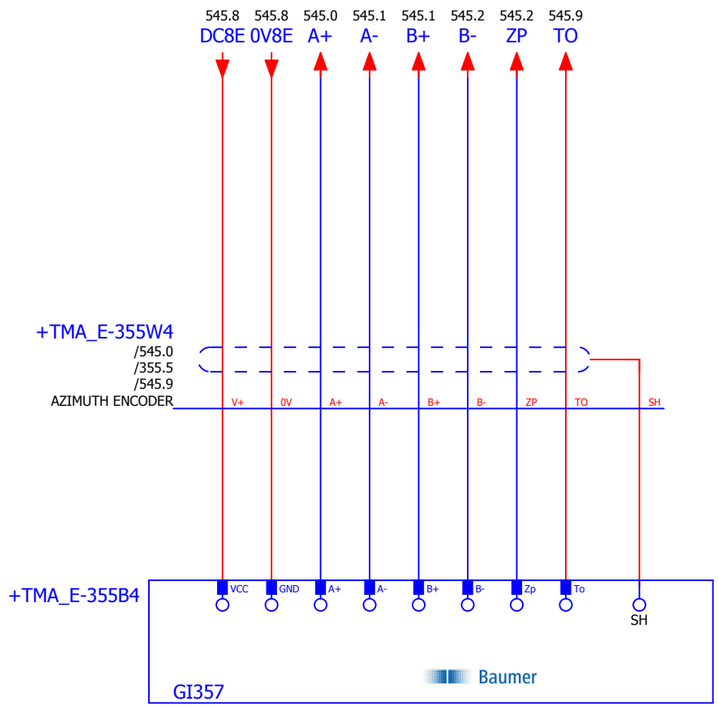

IK4 TEKNIKER Research Alliance

IK4-TEKNIKER
AVDA. OTAOLA 20
20600 Eibar (Gipuzkoa) Spain
Tfno.:(+34) 943 206744
Fax: (+34) 943 202757
Web: www.tekniker.es

Date	15/12/2017						
Reviewed	F.LÓPEZ	2.3	15/12/2017	JOSE MANUEL			
Drew by	JOSE MANUEL	Review	Date	Name	Review	Date	Name

3151_LSST

MCS Design Electrical Schematics

LSST TELESCOPE

Replaces

Replaced by

AZIMUTH ENCODER

Customer:

EMPRESARIOS AGRUPADOS

C/Magallanes, 3
28015 MADRID
91 3098000

http://www.empresariosagrupados.es/

= E1

+ TMA-PI-CS-CBT-0101

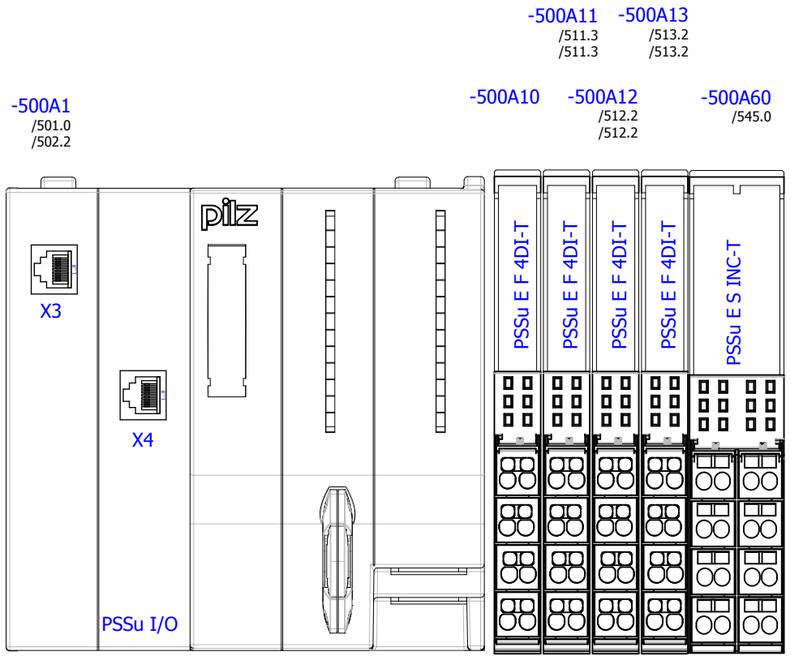

IK4 TEKNIKER Research Alliance
IK4-TEKNIKER
AVDA. OTAOLA 20
20600 Eibar (Gipuzkoa) Spain
Tfno.:(+34) 943 206744
Fax: (+34) 943 202757
Web: www.tekniker.es

Date	05/07/2017						
Reviewed	F.LÓPEZ	2.3	15/12/2017	JOSE MANUEL			
Drew by	JOSE MANUEL	Review	Date	Name	Review	Date	Name

3151_LSST
MCS Design Electrical Schematics
LSST TELESCOPE

Replaces | Replaced by

EMERGENCY PLC PSSuniversal

Customer: EMPRESARIOS AGRUPADOS
C/Magallanes, 3
28015 MADRID
91 3098000
http://www.empresariosagrupados.es/

= E1
+ TMA-PI-CS-CBT-0101

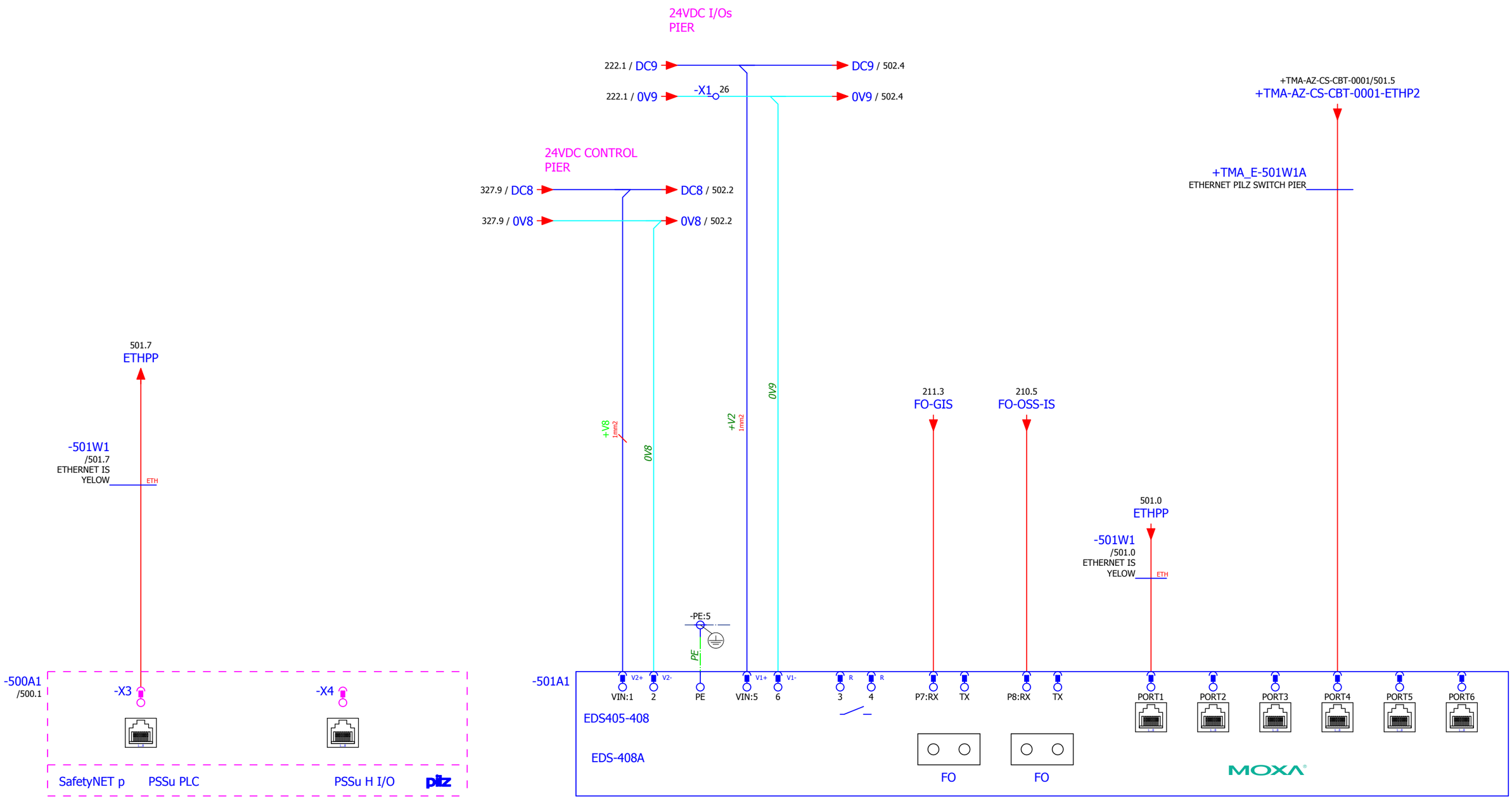

◁ 500

502 ▷

IK4 TEKNIKER Research Alliance
IK4-TEKNIKER
AVDA. OTAOLA 20
20600 Eibar (Gipuzkoa) Spain
Tfno.:(+34) 943 206744
Fax: (+34) 943 202757
Web: www.tekniker.es

Date	15/12/2017							
Reviewed	F.LÓPEZ	2.3	15/12/2017	JOSE MANUEL				
Drew by	JOSE MANUEL	Review	Date	Name	Review	Date	Name	

3151_LSST
MCS Design Electrical Schematics
LSST TELESCOPE
Replaces
Replaced by

SAFETY NET

Customer:
EMPRESARIOS AGRUPADOS
C/Magallanes, 3
28015 MADRID
91 3098000
http://www.empresariosagrupados.es/

= E1
+ TMA-PI-CS-CBT-0101

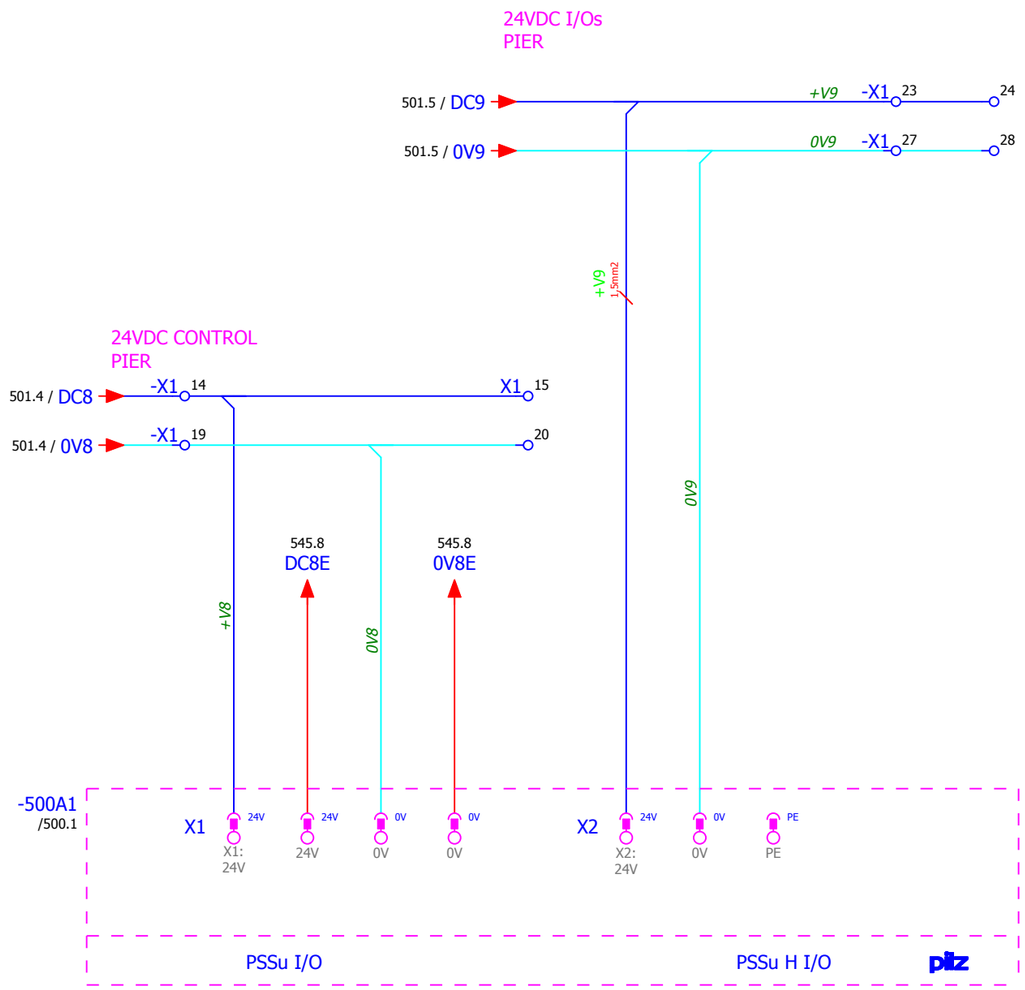

IK4-TEKNIKER
AVDA. OTAOLA 20
20600 Eibar (Gipuzkoa) Spain
Tfno.:(+34) 943 206744
Fax: (+34) 943 202757
Web: www.tekniker.es

Date	14/12/2017						
Reviewed	F.LÓPEZ	2.3	15/12/2017	JOSE MANUEL			
Drew by	JOSE MANUEL	Review	Date	Name	Review	Date	Name

3151_LSST
MCS Design Electrical Schematics
LSST TELESCOPE

Replaces
Replaced by

POWER SAFETY PSS

Customer:
EMPRESARIOS AGRUPADOS
C/Magallanes, 3
28015 MADRID
91 3098000
http://www.empresariosagrupados.es/

= E1
+ TMA-PI-CS-CBT-0101

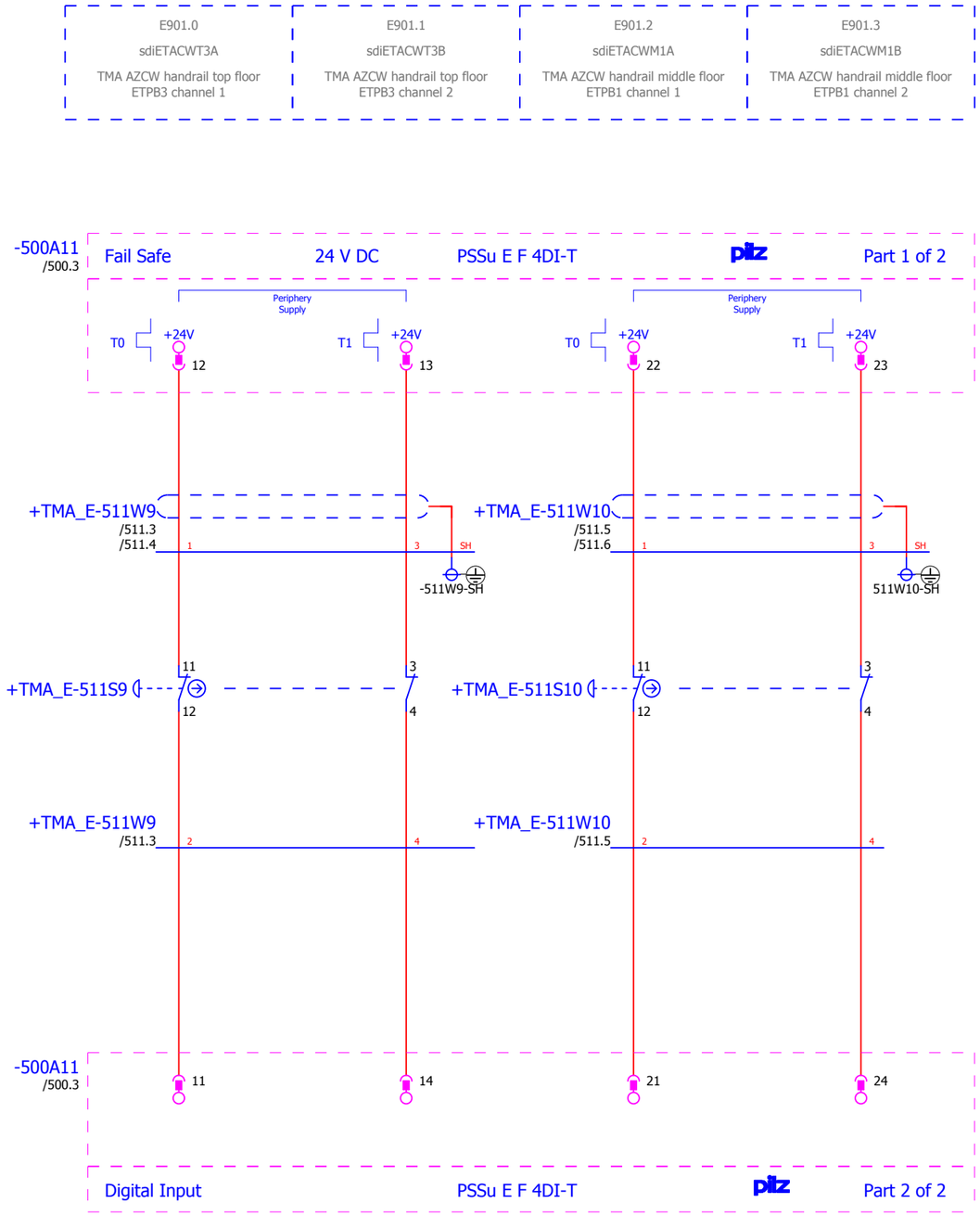

IK4 TEKNIKER Research Alliance

IK4-TEKNIKER
AVDA. OTAOLA 20
20600 Eibar (Gipuzkoa) Spain
Tfno.:(+34) 943 206744
Fax: (+34) 943 202757
Web: www.tekniker.es

Date	15/12/2017						
Reviewed	F.LÓPEZ	2.3	15/12/2017	JOSE MANUEL			
Drew by	JOSE MANUEL	Review	Date	Name	Review	Date	Name

3151_LSST

MCS Design Electrical Schematics

LSST TELESCOPE

Replaces | Replaced by

SAFETY DIGITAL INPUTS

Customer: EMPRESARIOS AGRUPADOS
C/Magallanes, 3
28015 MADRID
91 3098000
http://www.empresariosagrupados.es/

= E1

+ TMA-PI-CS-CBT-0101

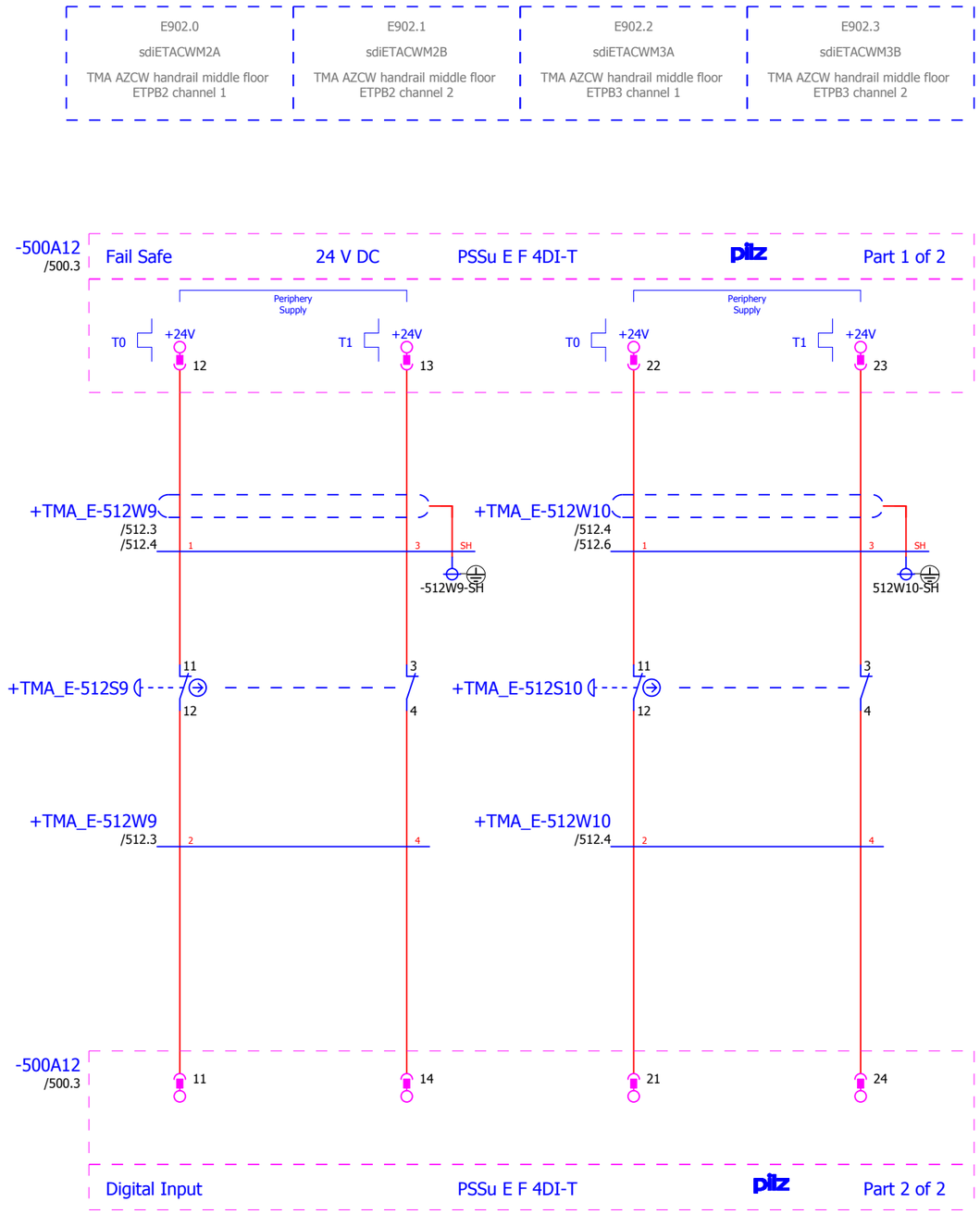

IK4 TEKNIKER Research Alliance
IK4-TEKNIKER
AVDA. OTAOLA 20
20600 Eibar (Gipuzkoa) Spain
Tfno.:(+34) 943 206744
Fax: (+34) 943 202757
Web: www.tekniker.es

Date	15/12/2017						
Reviewed	F.LÓPEZ	2.3	15/12/2017	JOSE MANUEL			
Drew by	JOSE MANUEL	Review	Date	Name	Review	Date	Name

3151_LSST
MCS Design Electrical Schematics
LSST TELESCOPE
Replaces
Replaced by

SAFETY DIGITAL INPUTS

Customer:
EMPRESARIOS AGRUPADOS
C/Magallanes, 3
28015 MADRID
91 3098000
http://www.empresariosagrupados.es/

= E1
+ TMA-PI-CS-CBT-0101

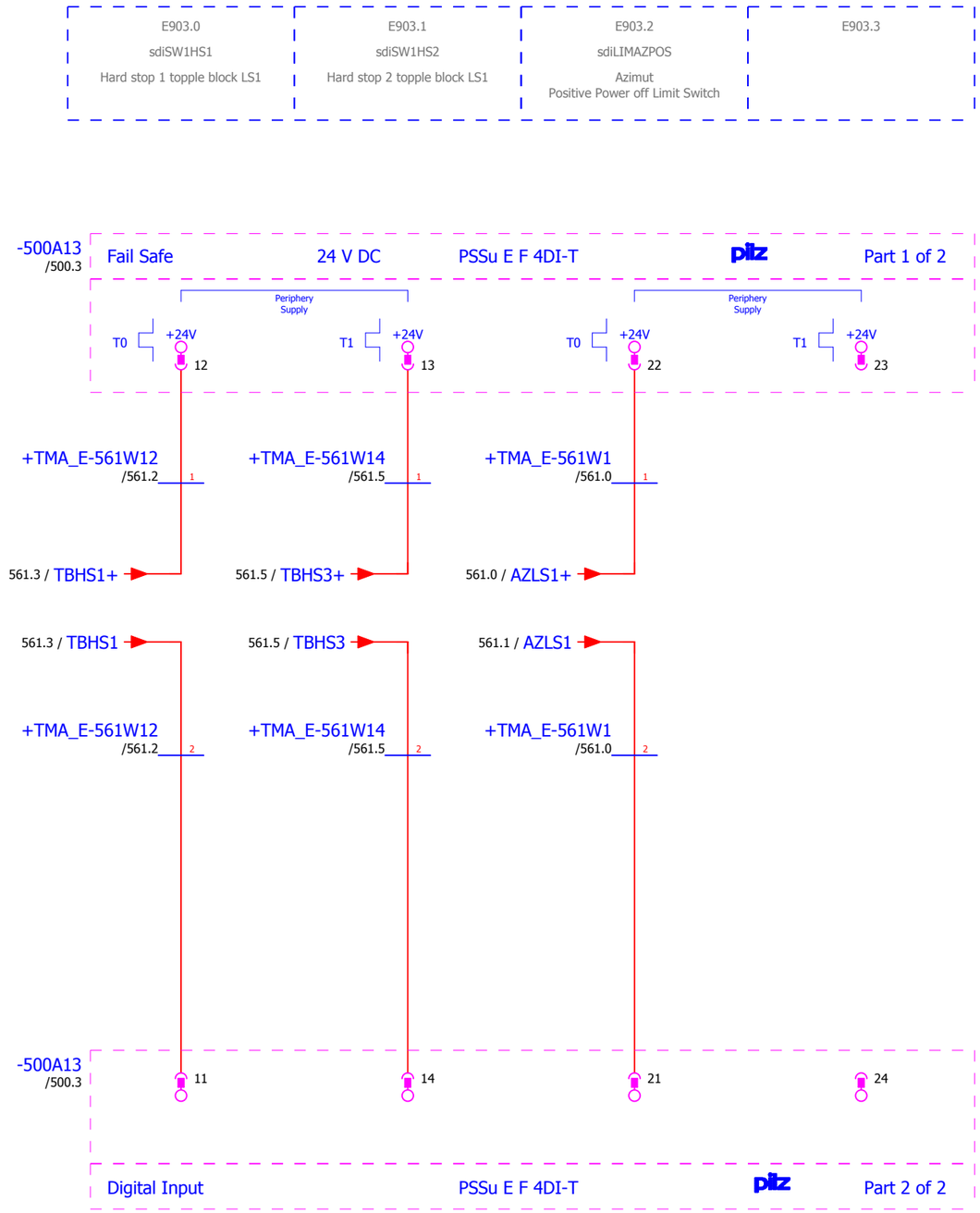

IK4 TEKNIKER Research Alliance
IK4-TEKNIKER
AVDA. OTAOLA 20
20600 Eibar (Gipuzkoa) Spain
Tfno.:(+34) 943 206744
Fax: (+34) 943 202757
Web: www.tekniker.es

Date	15/12/2017						
Reviewed	F.LÓPEZ	2.3	15/12/2017	JOSE MANUEL			
Drew by	JOSE MANUEL	Review	Date	Name	Review	Date	Name

3151_LSST
MCS Design Electrical Schematics
LSST TELESCOPE

Replaces | Replaced by

SAFETY DIGITAL INPUTS

Customer: EMPRESARIOS AGRUPADOS
C/Magallanes, 3
28015 MADRID
91 3098000
http://www.empresariosagrupados.es/

= E1
+ TMA-PI-CS-CBT-0101

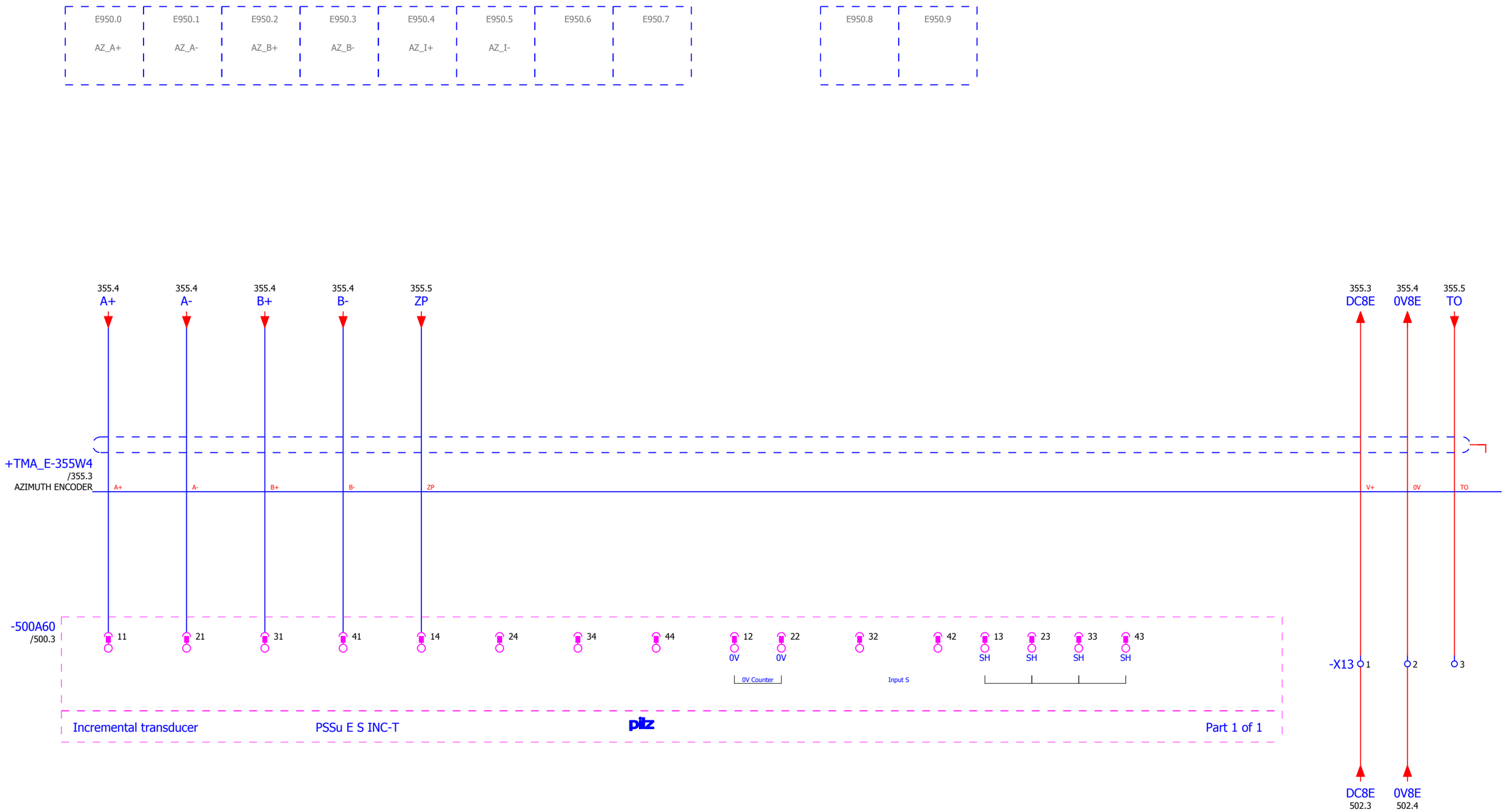

IK4 TEKNIKER Research Alliance

IK4-TEKNIKER
AVDA. OTAOLA 20
20600 Eibar (Gipuzkoa) Spain
Tfno.:(+34) 943 206744
Fax: (+34) 943 202757
Web: www.tekniker.es

Date	15/12/2017						
Reviewed	F.LÓPEZ	2.3	15/12/2017	JOSE MANUEL			
Drew by	JOSE MANUEL	Review	Date	Name	Review	Date	Name

3151_LSST

MCS Design Electrical Schematics

LSST TELESCOPE

Replaces

Replaced by

SAFETY COUNT INPUT

Customer: EMPRESARIOS AGRUPADOS

C/Magallanes, 3
28015 MADRID
91 3098000

http://www.empresariosagrupados.es/

= E1

+ TMA-PI-CS-CBT-0101

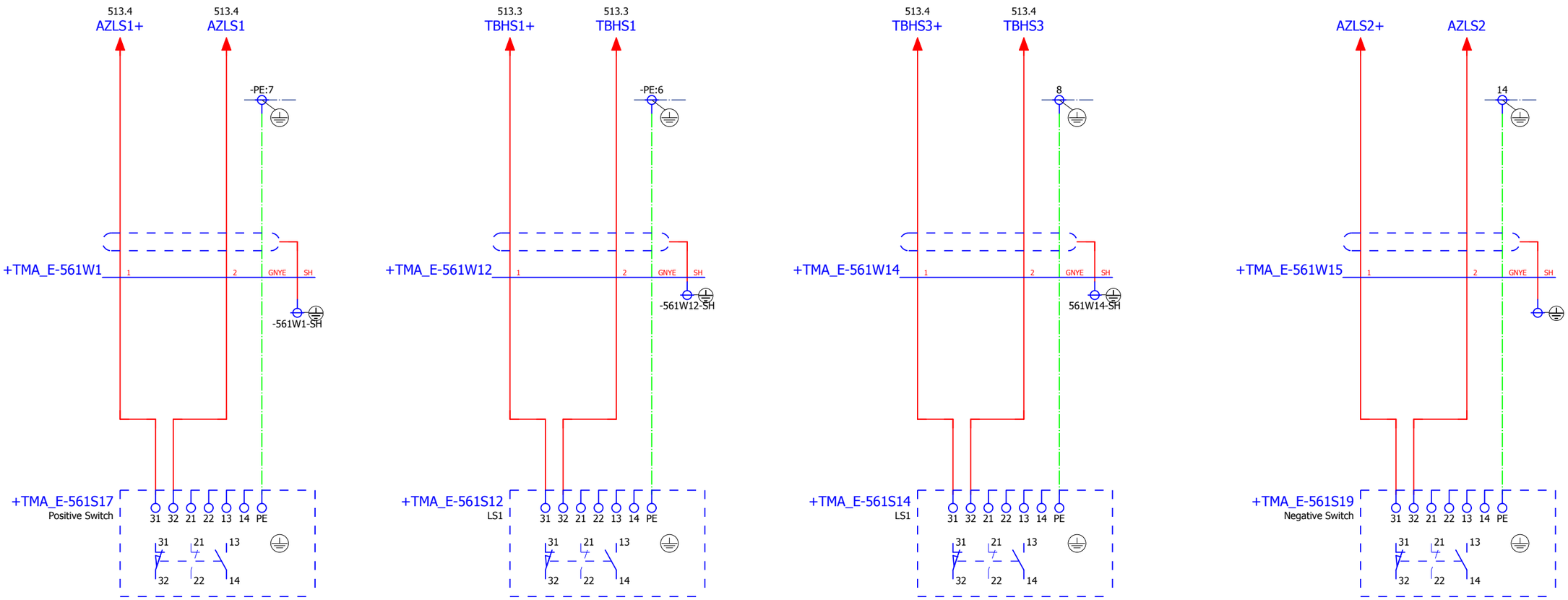

AZ Limit switch
power off

Hard stop 1 topple block

Hard stop 2 topple block

AZ Limit switch

IK4 TEKNIKER Research Alliance

IK4-TEKNIKER
AVDA. OTAOLA 20
20600 Eibar (Gipuzkoa) Spain
Tfno.:(+34) 943 206744
Fax: (+34) 943 202757
Web: www.tekniker.es

Date	15/12/2017						
Reviewed	F.LÓPEZ	2.3	15/12/2017	JOSE MANUEL			
Drew by	JOSE MANUEL	Review	Date	Name	Review	Date	Name

3151_LSST

MCS Design Electrical Schematics

LSST TELESCOPE

Replaces | Replaced by

SECURITY Limit Switch

Customer: EMPRESARIOS AGRUPADOS
C/Magallanes, 3
28015 MADRID
91 3098000
http://www.empresariosagrupados.es/

= E1
+ TMA-PI-CS-CBT-0101

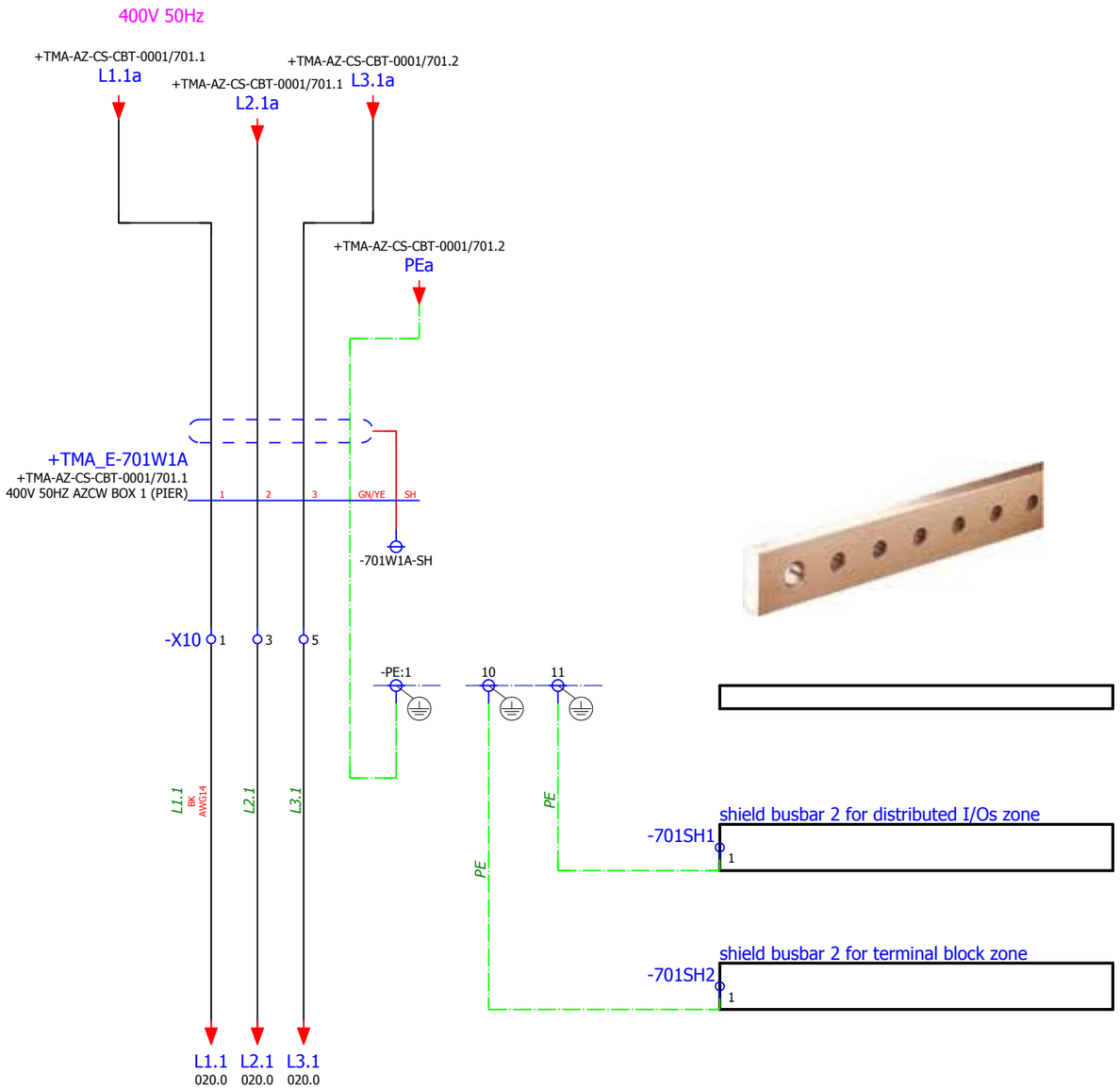

400v 50Hz
AZCW 1 AUXILIARY BOX (PIER)

IK4 TEKNIKER Research Alliance
IK4-TEKNIKER
AVDA. OTAOLA 20
20600 Eibar (Gipuzkoa) Spain
Tfno.:(+34) 943 206744
Fax: (+34) 943 202757
Web: www.tekniker.es

Date	15/12/2017						
Reviewed	F.LÓPEZ	2.3	15/12/2017	JOSE MANUEL			
Drew by	JOSE MANUEL	Review	Date	Name	Review	Date	Name

3151_LSST
MCS Design Electrical Schematics
LSST TELESCOPE
Replaces
Replaced by

POWER SUPPLY FROM MAIN CONTROL CABINET

Customer:
EMPRESARIOS AGRUPADOS
C/Magallanes, 3
28015 MADRID
91 3098000
http://www.empresariosagrupados.es/

= E1
+ TMA-PI-CS-CBT-0101

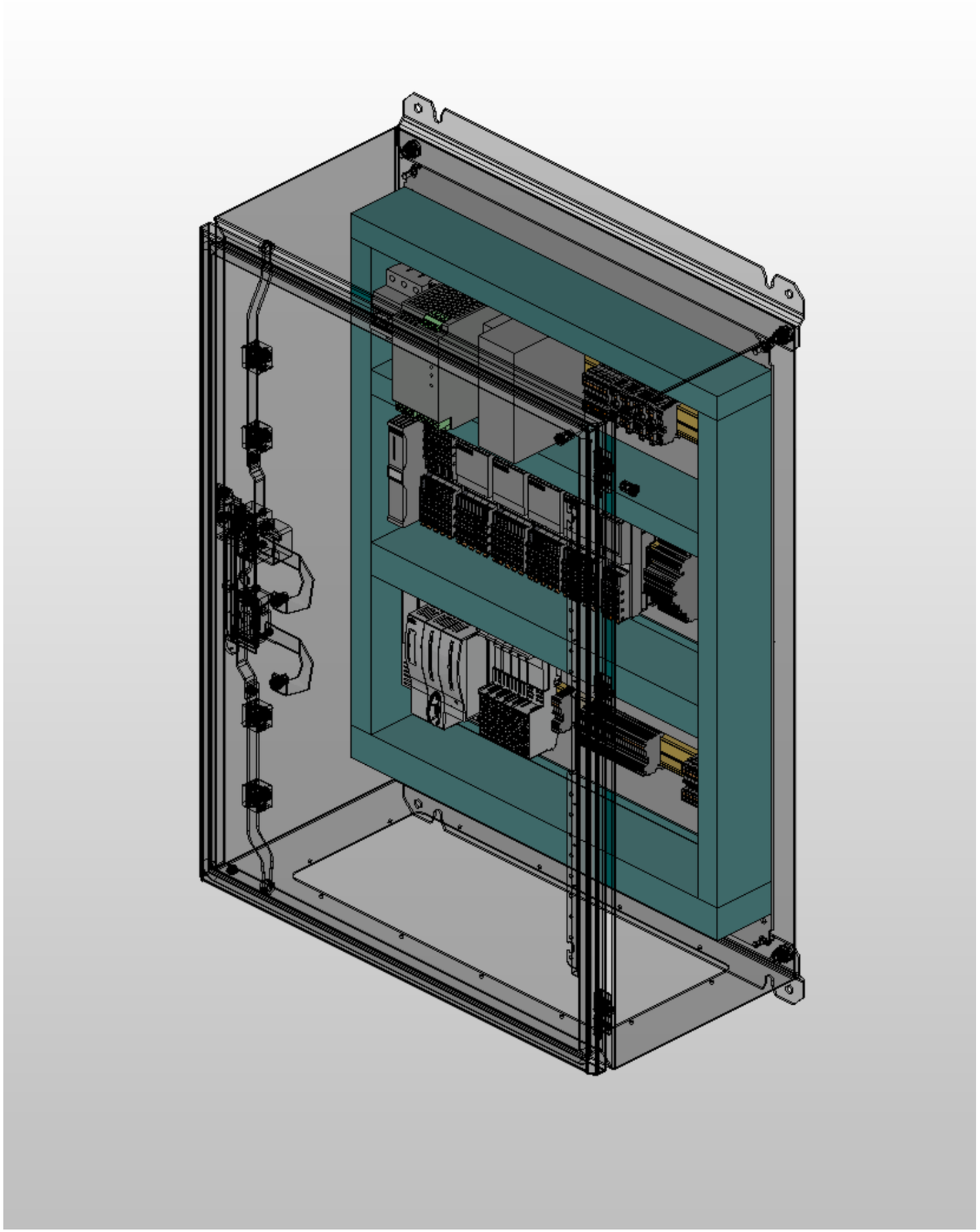

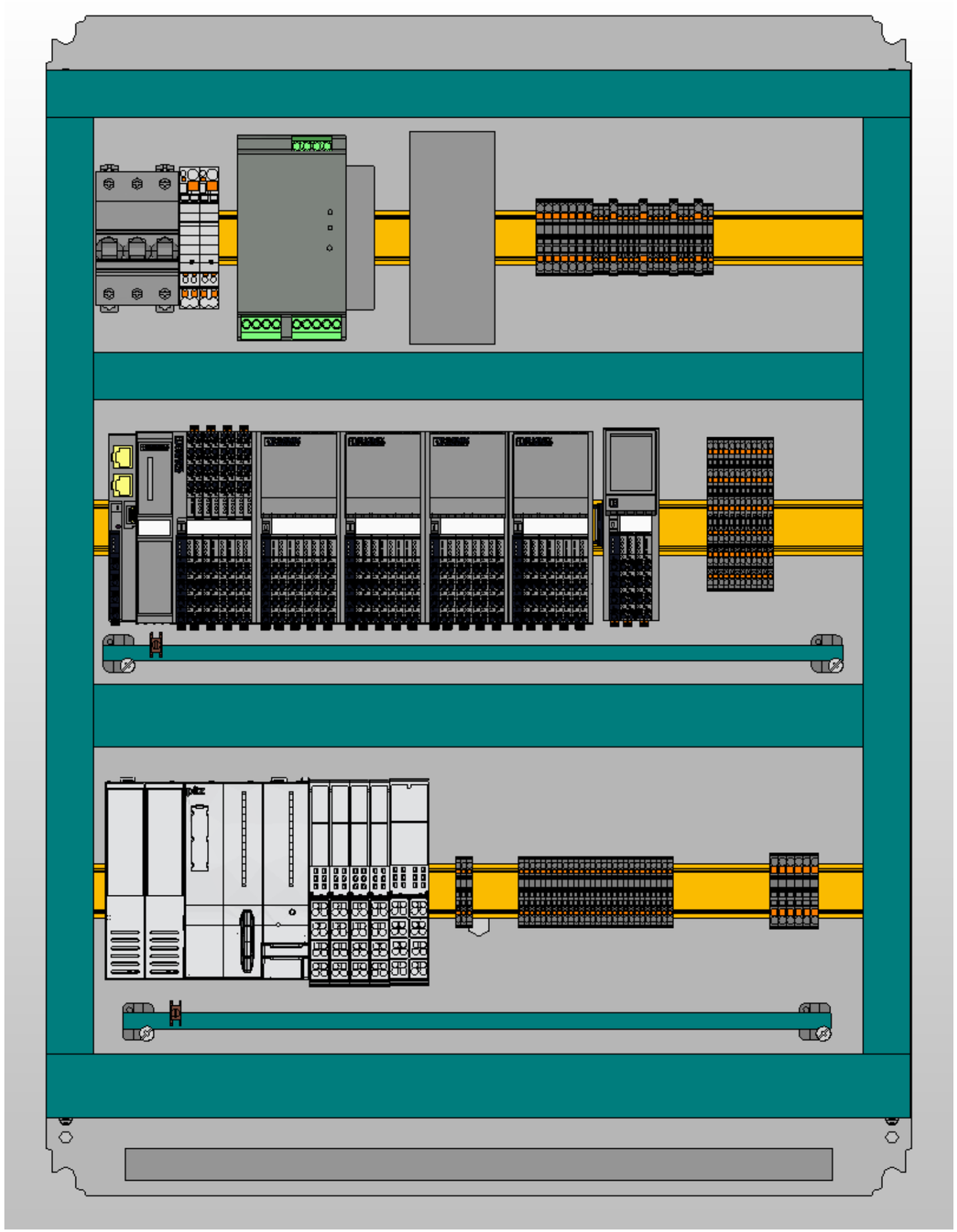

◁ 701

802 ▷

IK4 TEKNIKER Research Alliance
IK4-TEKNIKER
AVDA. OTAOLA 20
20600 Eibar (Gipuzkoa) Spain
Tfno.:(+34) 943 206744
Fax: (+34) 943 202757
Web: www.tekniker.es

Date	05/07/2017						
Reviewed	F.LÓPEZ	2.3	15/12/2017	JOSE MANUEL			
Drew by	JOSE MANUEL	Review	Date	Name	Review	Date	Name

3151_LSST

MCS Design Electrical Schematics

LSST TELESCOPE

Replaces | Replaced by

BOX VIEW

Customer: EMPRESARIOS AGRUPADOS
C/Magallanes, 3
28015 MADRID
91 3098000
http://www.empresariosagrupados.es/

= E1
+ TMA-PI-CS-CBT-0101

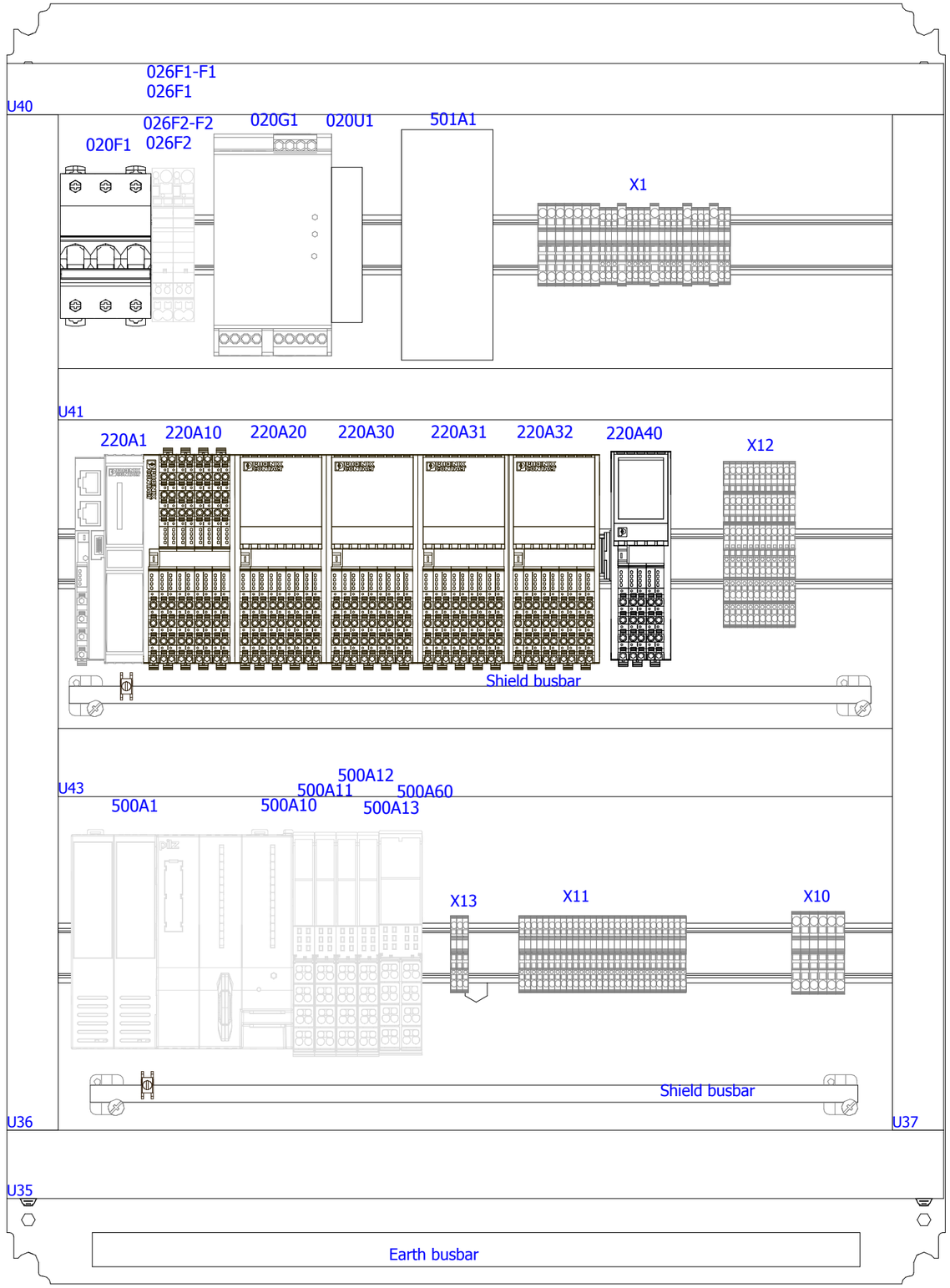

◁ 801

803 ▷

IK4 TEKNIKER Research Alliance
IK4-TEKNIKER
AVDA. OTAOLA 20
20600 Eibar (Gipuzkoa) Spain
Tfno.:(+34) 943 206744
Fax: (+34) 943 202757
Web: www.tekniker.es

Date	05/07/2017						
Reviewed	F.LÓPEZ	2.3	15/12/2017	JOSE MANUEL			
Drew by	JOSE MANUEL	Review	Date	Name	Review	Date	Name

3151_LSST

MCS Design Electrical Schematics

LSST TELESCOPE

Replaces | Replaced by

Mounting Plate

Customer: EMPRESARIOS AGRUPADOS

EMPRESARIOS AGRUPADOS
C/Magallanes, 3
28015 MADRID
91 3098000
http://www.empresariosagrupados.es/

= E1

+ TMA-PI-CS-CBT-0101

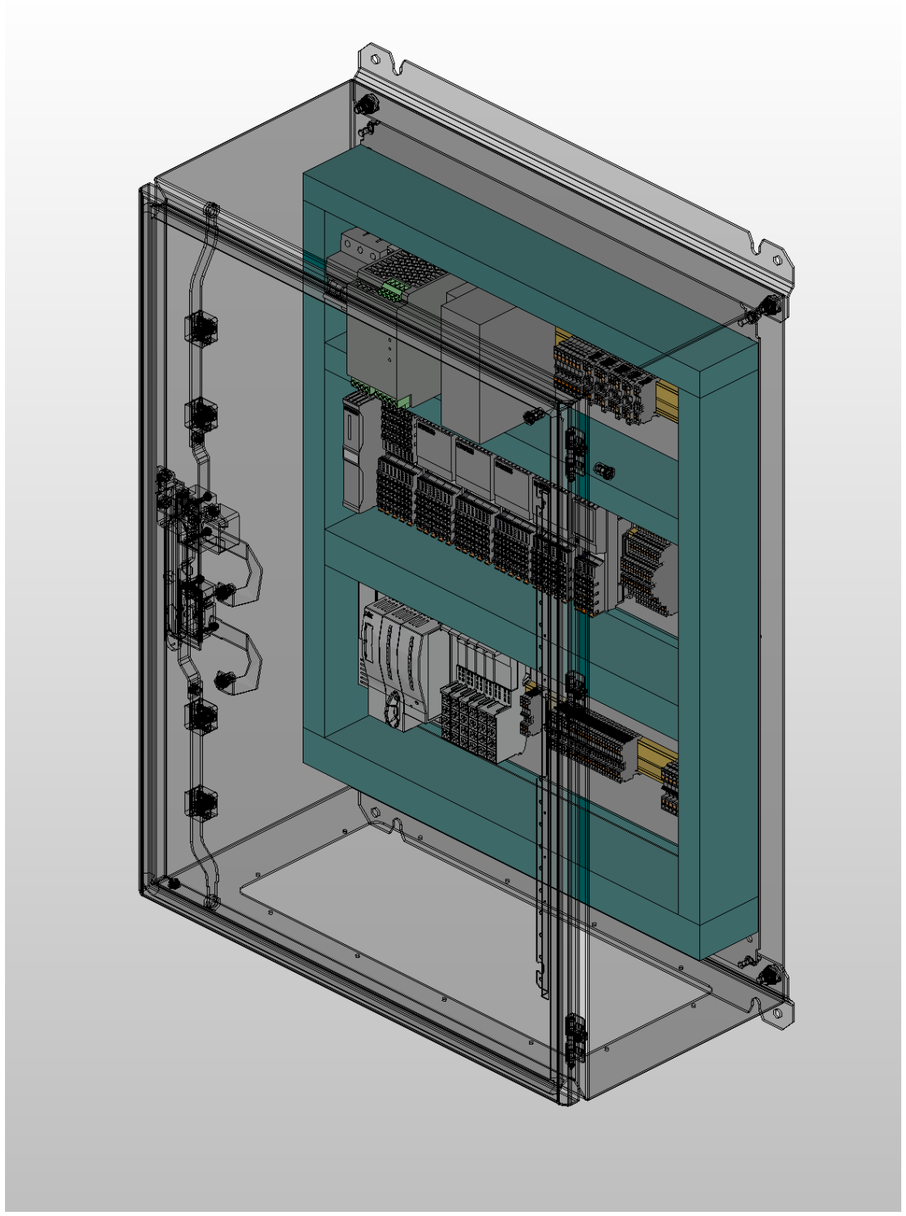

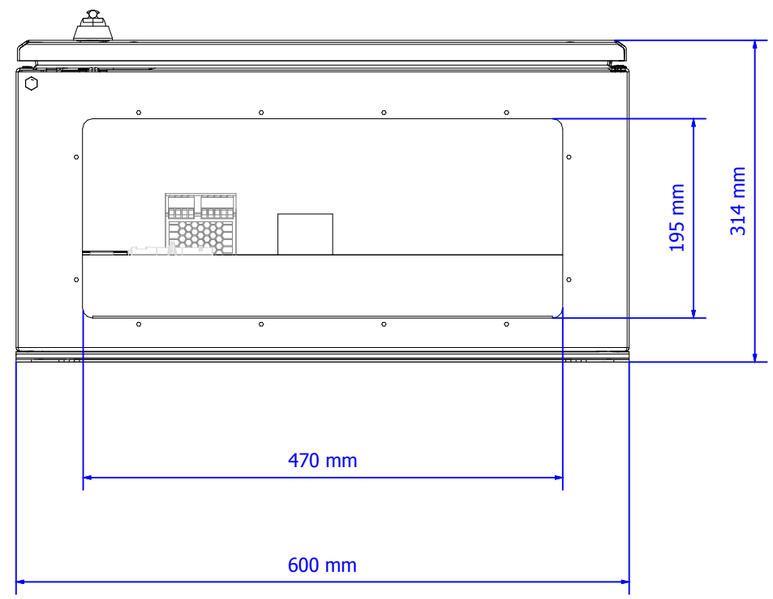

◁ 802

804 ▷

IK4 TEKNIKER Research Alliance
IK4-TEKNIKER
AVDA. OTAOLA 20
20600 Eibar (Gipuzkoa) Spain
Tfno.:(+34) 943 206744
Fax: (+34) 943 202757
Web: www.tekniker.es

Date	05/07/2017						
Reviewed	F.LÓPEZ	2.3	15/12/2017	JOSE MANUEL			
Drew by	JOSE MANUEL	Review	Date	Name	Review	Date	Name

3151_LSST
MCS Design Electrical Schematics
LSST TELESCOPE

Replaces | Replaced by

CABLE ENTRANCE DIMENSIONS

Customer: EMPRESARIOS AGRUPADOS
C/Magallanes, 3
28015 MADRID
91 3098000
http://www.empresariosagrupados.es/

= E1
+ TMA-PI-CS-CBT-0101

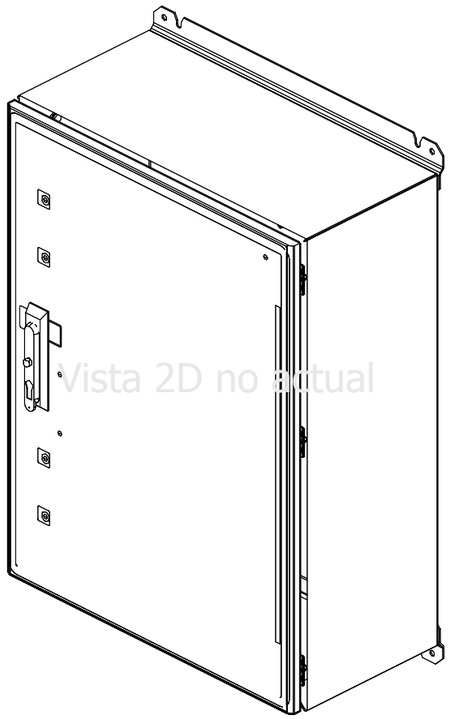

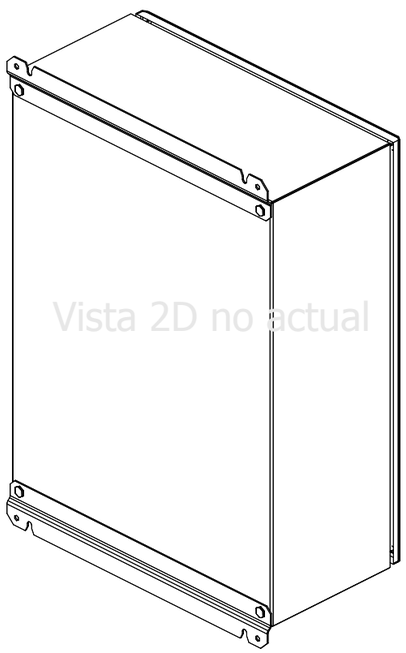

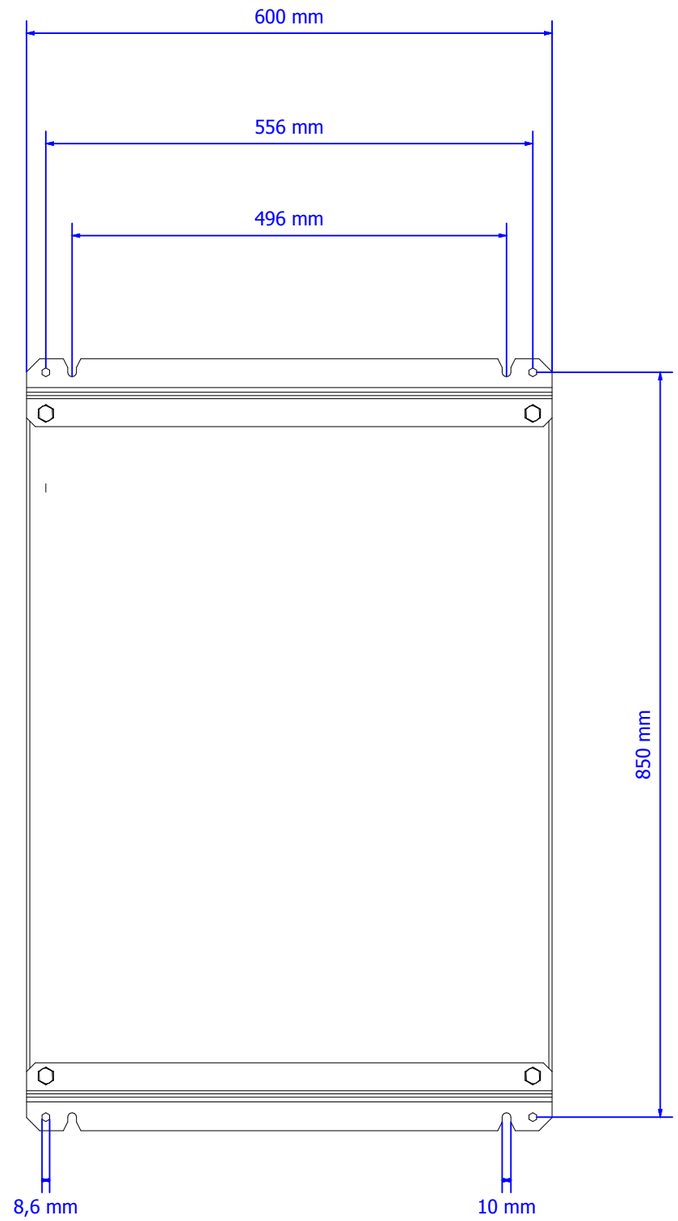

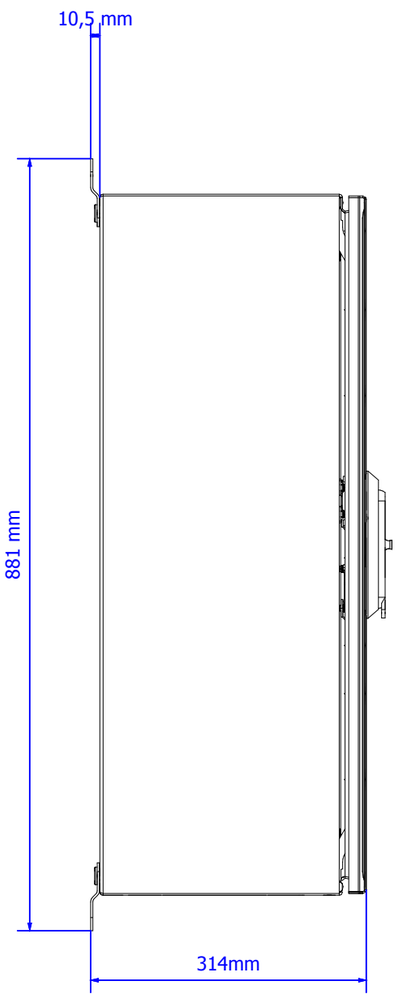

IK4 TEKNIKER Research Alliance

IK4-TEKNIKER
AVDA. OTAOLA 20
20600 Eibar (Gipuzkoa) Spain
Tfno.:(+34) 943 206744
Fax: (+34) 943 202757
Web: www.tekniker.es

Date	20/01/2017							
Reviewed	F.LÓPEZ	2.3	15/12/2017	JOSE MANUEL				
Drew by	jcastano	Review	Date	Name	Review	Date	Name	

3151_LSST

MCS Design Electrical Schematics

LSST TELESCOPE

Replaces | Replaced by

CABINET DIMENSIONS

Customer: EMPRESARIOS AGRUPADOS

EMPRESARIOS AGRUPADOS
C/Magallanes, 3
28015 MADRID
91 3098000
http://www.empresariosagrupados.es/

= E1

+ TMA-PI-CS-CBT-0101

Customer

EMPRESARIOS AGRUPADOS

EMPRESARIOS AGRUPADOS
C/Magallanes, 3
28015 MADRID
ESPAÑA
91 3098000

http://www.empresariosagrupados.es/

Project:

3151_LSST
MCS Design Electrical Schematics
LSST TELESCOPE

E1
TMA

TMA-CCWAUX-CS-CBT-0101
CCW AUXILIAR PORTABLE CABINET

Number of pages: 710

Made by:

IK4 TEKNIKER Research Alliance

IK4-TEKNIKER
AVDA. OTAOLA 20
20600 Eibar (Gipuzkoa) Spain
Tfno. : (+34) 943 206744
Fax : (+34) 943 202757
Web: www.tekniker.es

Review	Review description	Date	Reviewed
2.3	VERSION INTERMEDIA PARA MONTAJE ASTURFEITO (SIN EVALUACIONES)	15/12/2017	JOSE MANUEL

Drew by:	J.M.CASTAÑO
Reviewed:	F.LÓPEZ
Date:	16/12/2015
Replaces:	
Replaced by:	

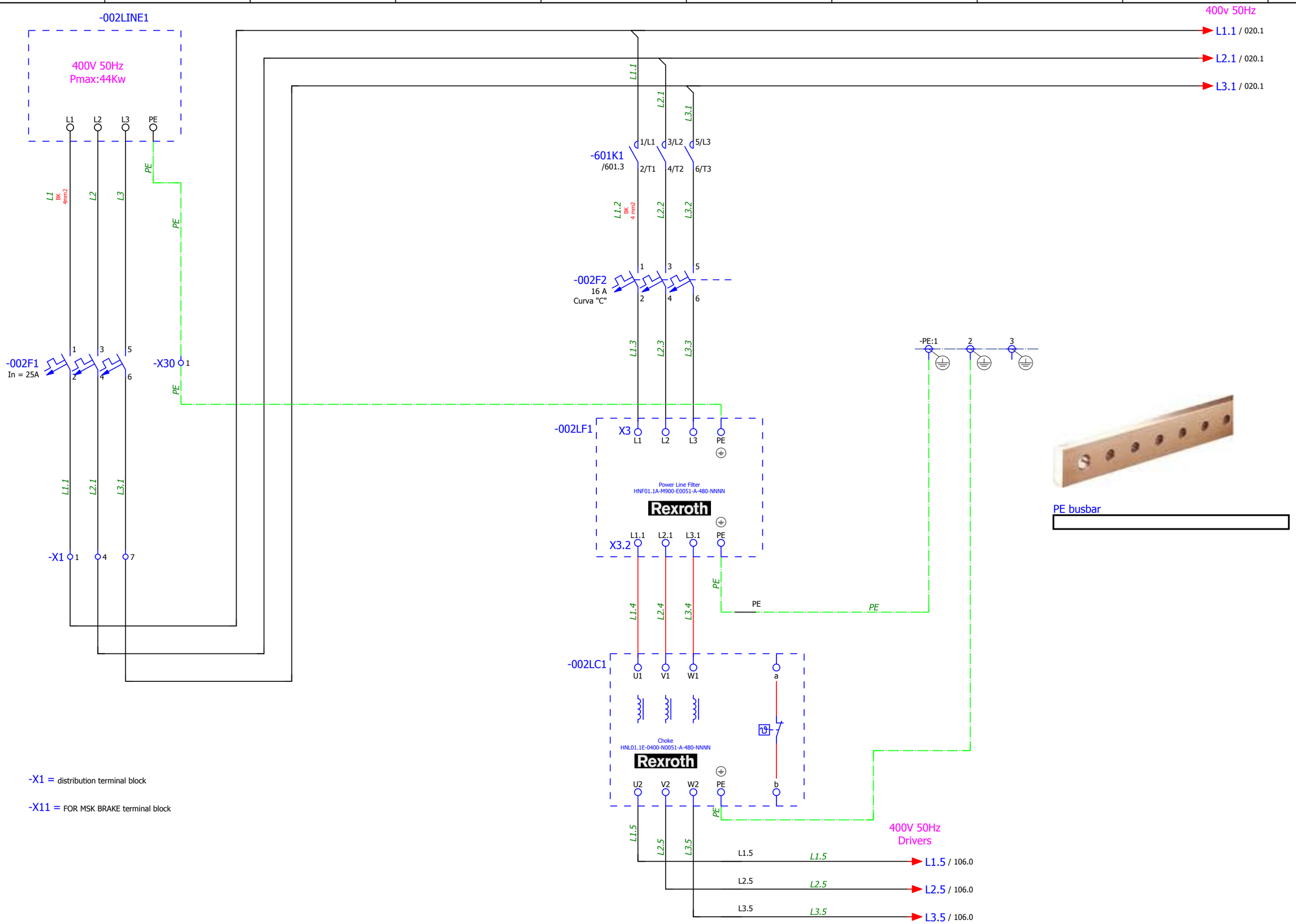

-X1 = distribution terminal block

-X11 = FOR MSK BRAKE terminal block

◁ 001

020 ▷

IK4 TEKNIKER Research Alliance	IK4-TEKNIKER AVDA. OTAOLA 20 20600 Eibar (Gipuzkoa) Spain Tfno.:(+34) 943 206744 Fax: (+34) 943 202757 Web: www.tekniker.es									3151_LSST	MCS Design Electrical Schematics LSST TELESCOPE	POWER	Customer: EMPRESARIOS AGRUPADOS C/Magallanes, 3 28015 MADRID 91 3098000 http://www.empresariosagrupados.es/	= E1 + TMA-CCWAUX-CS-CBT-0101
		Date	23/02/2017											
		Reviewed	F.LÓPEZ	2.3	15/12/2017	JOSE MANUEL								Page 002
		Drew by	jcastano	Review	Date	Name	Review	Date	Name	Replaces	Replaced by			Total number 710

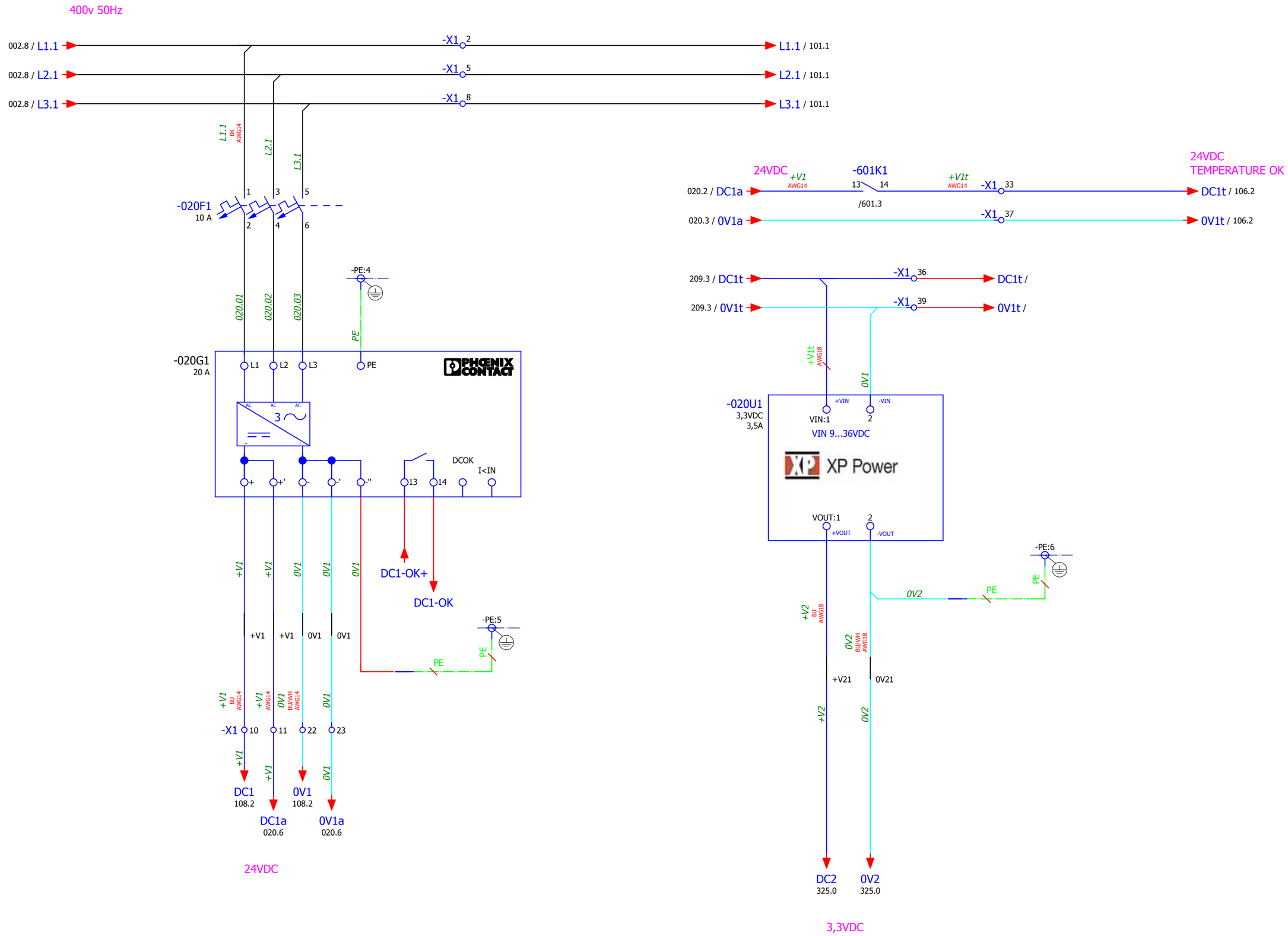

◁ 002

101 ▷

IK4 TEKNIKER Research Alliance	IK4-TEKNIKER AVDA. OTAOLA 20 20600 Eibar (Gipuzkoa) Spain Tfno.:(+34) 943 206744 Fax: (+34) 943 202757 Web: www.tekniker.es								3151_LSST	MCS Design Electrical Schematics LSST TELESCOPE	DC POWER	Customer: EMPRESARIOS AGRUPADOS C/Magallanes, 3 28015 MADRID 91 3098000 http://www.empresariosagrupados.es/	= E1 + TMA-CCWAUX-CS-CBT-0101
		Date	28/11/2017										
		Reviewed	F.LÓPEZ	2.3	15/12/2017	JOSE MANUEL							
		Drew by	JOSE MANUEL	Review	Date	Name	Review	Date	Name	Replaces	Replaced by		Page 020 Total number 710

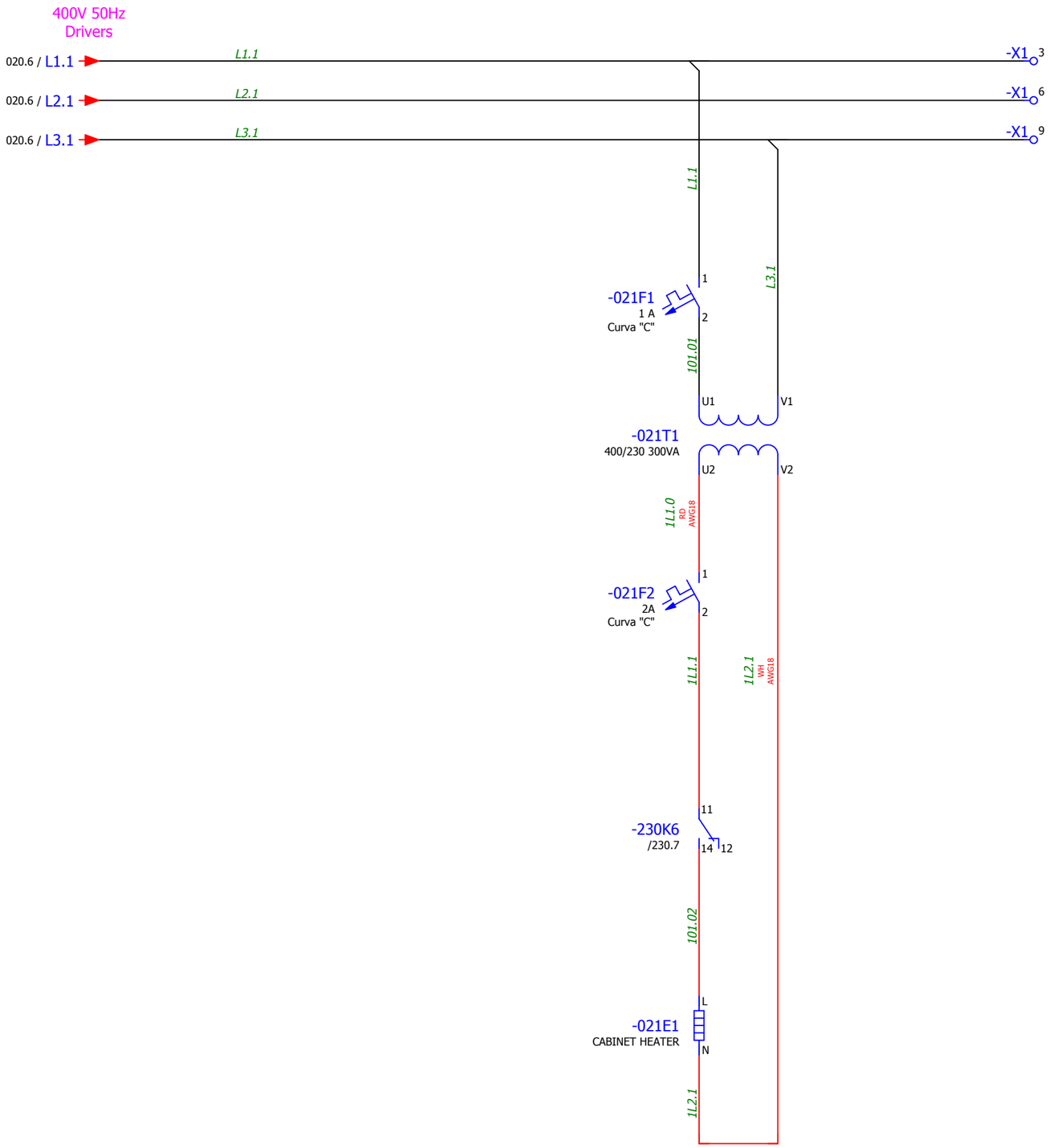

IK4-TEKNIKER
AVDA. OTAOLA 20
20600 Eibar (Gipuzkoa) Spain
Tfno.:(+34) 943 206744
Fax: (+34) 943 202757
Web: www.tekniker.es

Date	23/02/2017						
Reviewed	F.LÓPEZ	2.3	15/12/2017	JOSE MANUEL			
Drew by	jcastano	Review	Date	Name	Review	Date	Name

3151_LSST

MCS Design Electrical Schematics

LSST TELESCOPE

Replaces

Replaced by

CABINET TEMPERATURE MODULE

Customer:

EMPRESARIOS AGRUPADOS
C/Magallanes, 3
28015 MADRID
91 3098000
http://www.empresariosagrupados.es/

= E1

+ TMA-CCWAUX-CS-CBT-0101

Page 101
Total number 710

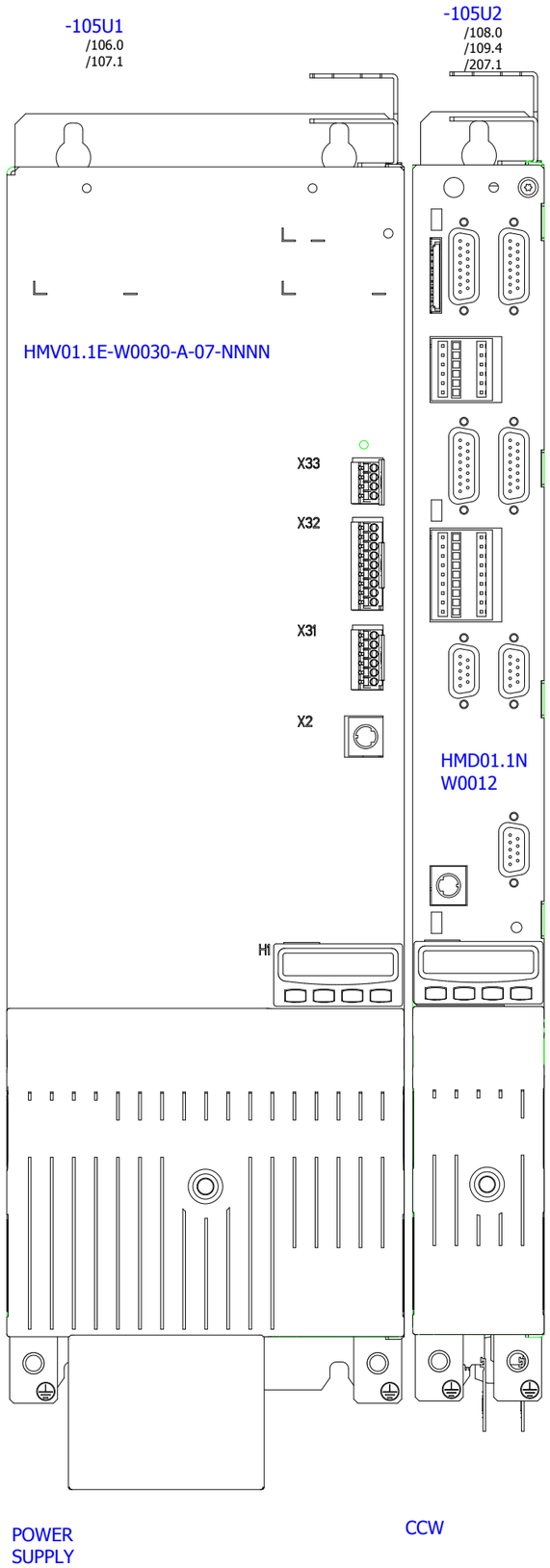

◁ 101

106 ▷

IK4-TEKNIKER
AVDA. OTAOLA 20
20600 Eibar (Gipuzkoa) Spain
Tfno.:(+34) 943 206744
Fax: (+34) 943 202757
Web: www.tekniker.es

Date	23/02/2017						
Reviewed	F.LÓPEZ	2.3	15/12/2017	JOSE MANUEL			
Drew by	jcastano	Review	Date	Name	Review	Date	Name

3151_LSST

MCS Design Electrical Schematics

LSST TELESCOPE

Replaces | Replaced by

MOTORS

Customer: EMPRESARIOS AGRUPADOS
C/Magallanes, 3
28015 MADRID
91 3098000
http://www.empresariosagrupados.es/

= E1

+ TMA-CCWAUX-CS-CBT-0101

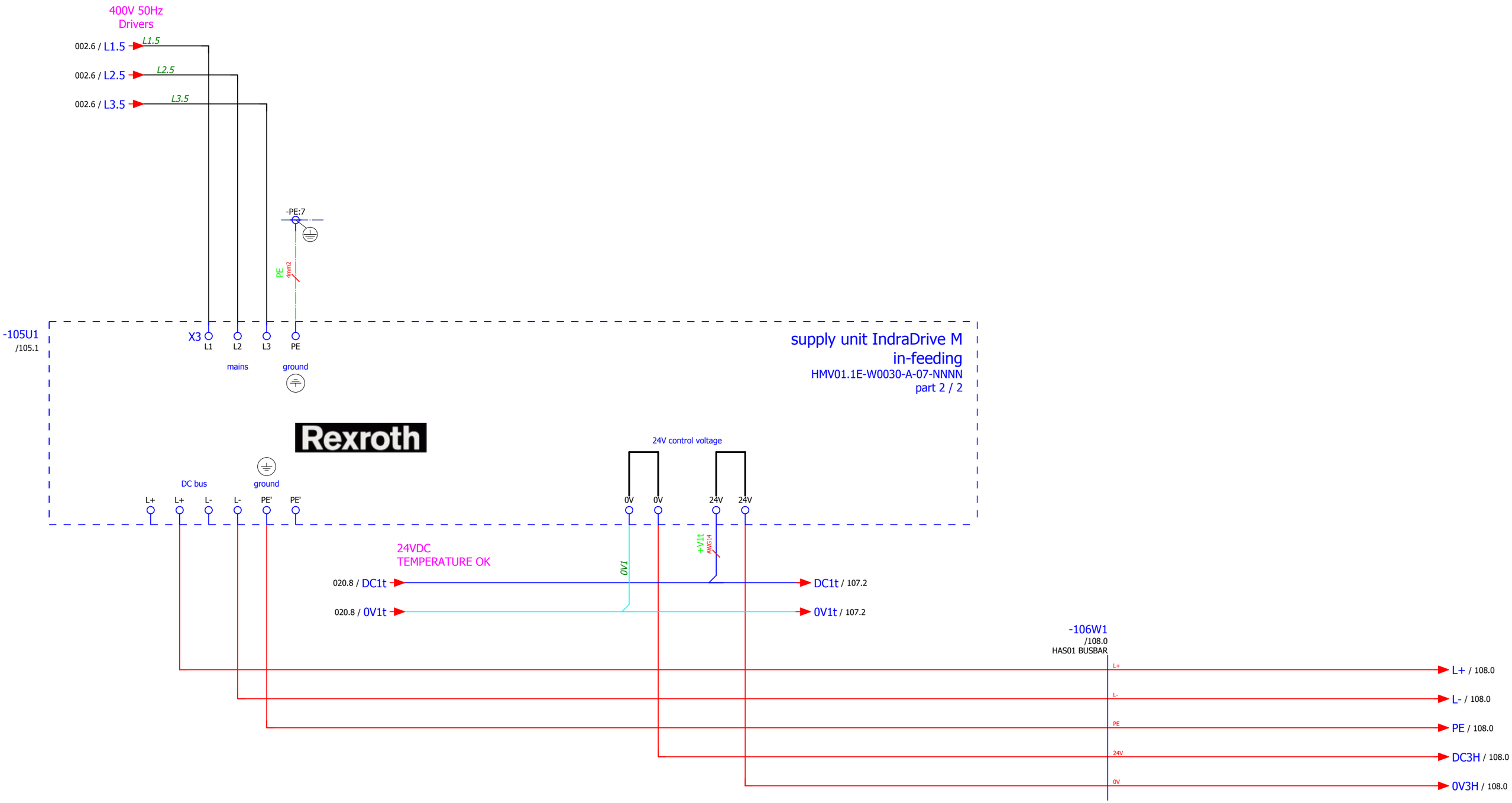

IK4 TEKNIKER Research Alliance
IK4-TEKNIKER
AVDA. OTAOLA 20
20600 Eibar (Gipuzkoa) Spain
Tfno.:(+34) 943 206744
Fax: (+34) 943 202757
Web: www.tekniker.es

Date	18/04/2017							
Reviewed	F.LÓPEZ	2.3	15/12/2017	JOSE MANUEL				
Drew by	jcastano	Review	Date	Name	Review	Date	Name	

3151_LSST
MCS Design Electrical Schematics
LSST TELESCOPE

Replaces | Replaced by

MOTORS POWER SUPPLY

Customer: EMPRESARIOS AGRUPADOS
C/Magallanes, 3
28015 MADRID
91 3098000
http://www.empresariosagrupados.es/

= E1
+ TMA-CCWAUX-CS-CBT-0101

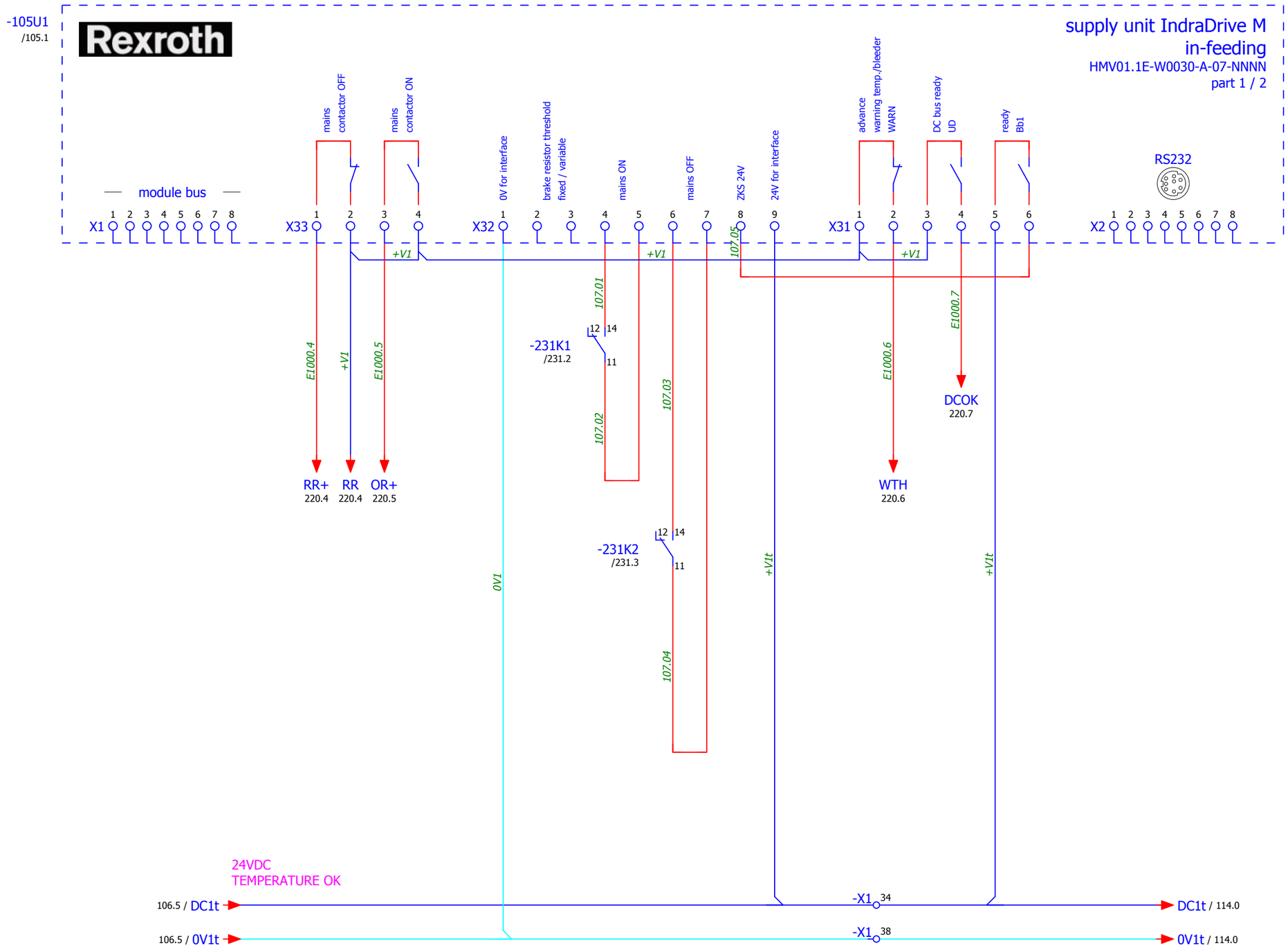

IK4 TEKNIKER Research Alliance

IK4-TEKNIKER
AVDA. OTAOLA 20
20600 Eibar (Gipuzkoa) Spain
Tfno.:(+34) 943 206744
Fax: (+34) 943 202757
Web: www.tekniker.es

Date	23/02/2017						
Reviewed	F.LÓPEZ	2.3	15/12/2017	JOSE MANUEL			
Drew by	jcastano	Review	Date	Name	Review	Date	Name

3151_LSST

MCS Design Electrical Schematics

LSST TELESCOPE

Replaces | Replaced by

MOTORS POWER SUPPLY CONTROL

Customer: EMPRESARIOS AGRUPADOS
C/Magallanes, 3
28015 MADRID
91 3098000
http://www.empresariosagrupados.es/

= E1

+ TMA-CCWAUX-CS-CBT-0101

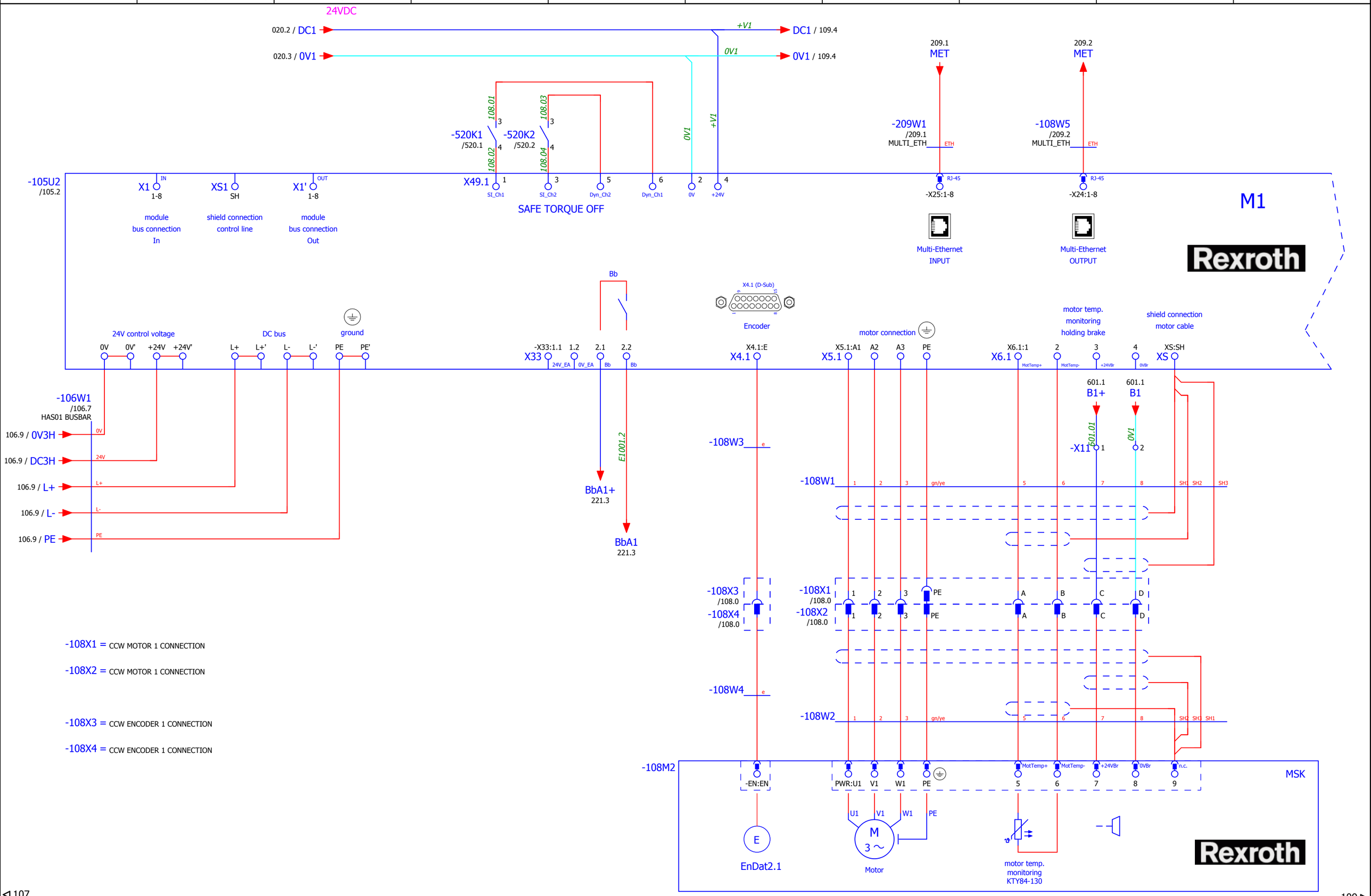

-108X1 = CCW MOTOR 1 CONNECTION

-108X2 = CCW MOTOR 1 CONNECTION

-108X3 = CCW ENCODER 1 CONNECTION

-108X4 = CCW ENCODER 1 CONNECTION

IK4 TEKNIKER Research Alliance
IK4-TEKNIKER
AVDA. OTAOLA 20
20600 Eibar (Gipuzkoa) Spain
Tfno.:(+34) 943 206744
Fax: (+34) 943 202757
Web: www.tekniker.es

Date	05/07/2017						
Reviewed	F.LÓPEZ	2.3	15/12/2017	JOSE MANUEL			
Drew by	JOSE MANUEL	Review	Date	Name	Review	Date	Name

3151_LSST
MCS Design Electrical Schematics
LSST TELESCOPE
Replaces
Replaced by

POWER MOTOR 1 CAMERA CABLE WRAP

Customer: EMPRESARIOS AGRUPADOS
C/Magallanes, 3
28015 MADRID
91 3098000
http://www.empresariosagrupados.es/

= E1
+ TMA-CCWAUX-CS-CBT-0101

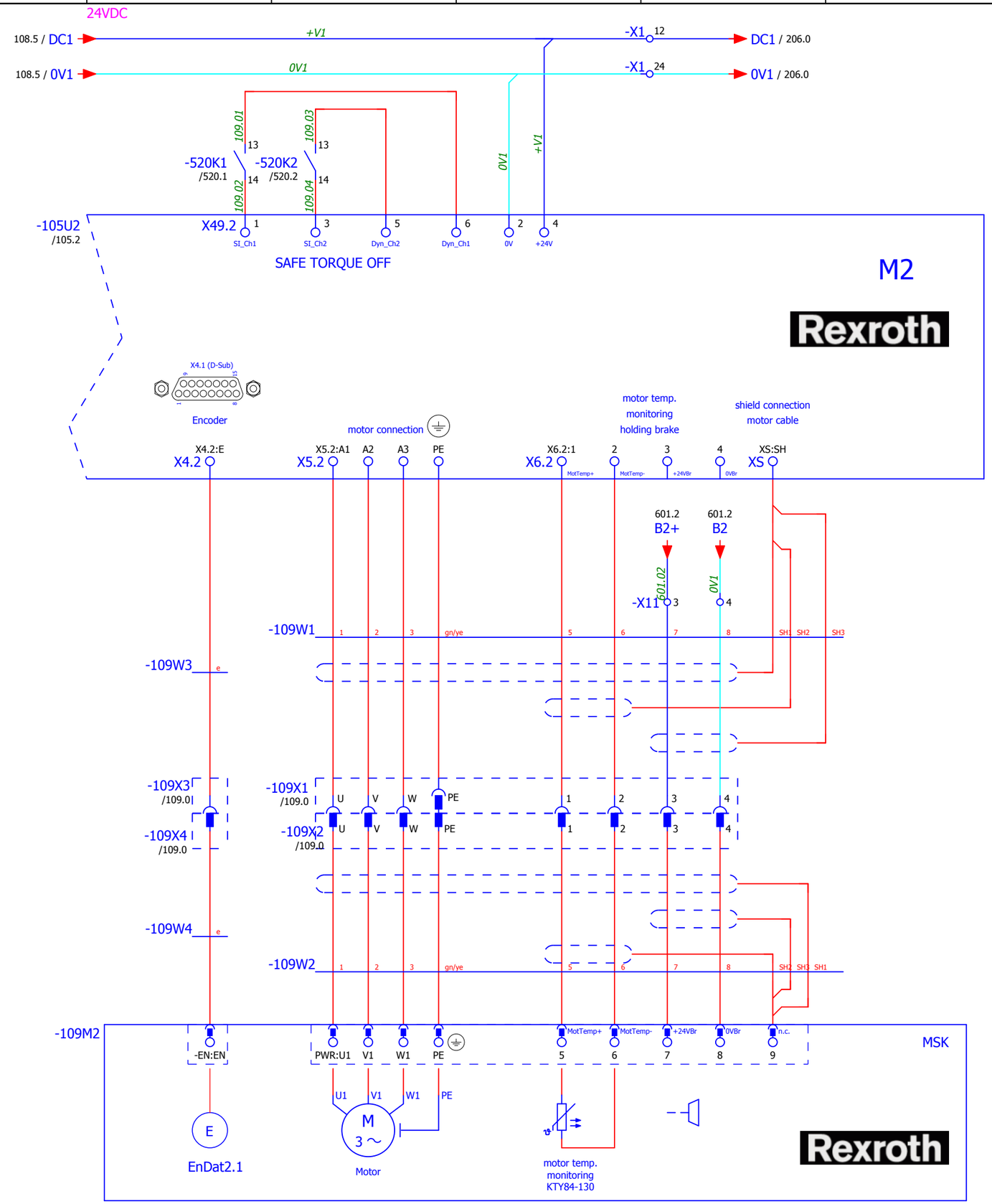

-109X1 = AZCW MOTOR 2 CONNECTION

-109X2 = AZCW MOTOR 2 CONNECTION

-109X3 = AZCW ENCODER 2 CONNECTION

-109X4 = AZCW ENCODER 2 CONNECTION

IK4 TEKNIKER Research Alliance

IK4-TEKNIKER
AVDA. OTAOLA 20
20600 Eibar (Gipuzkoa) Spain
Tfno.:(+34) 943 206744
Fax: (+34) 943 202757
Web: www.tekniker.es

Date	15/12/2017						
Reviewed	F.LÓPEZ	2.3	15/12/2017	JOSE MANUEL			
Drew by	JOSE MANUEL	Review	Date	Name	Review	Date	Name

3151_LSST

MCS Design Electrical Schematics

LSST TELESCOPE

Replaces | Replaced by

POWER MOTOR 2 CAMERA CABLE WRAP

Customer: EMPRESARIOS AGRUPADOS
C/Magallanes, 3
28015 MADRID
91 3098000
http://www.empresariosagrupados.es/

= E1

+ TMA-CCWAUX-CS-CBT-0101

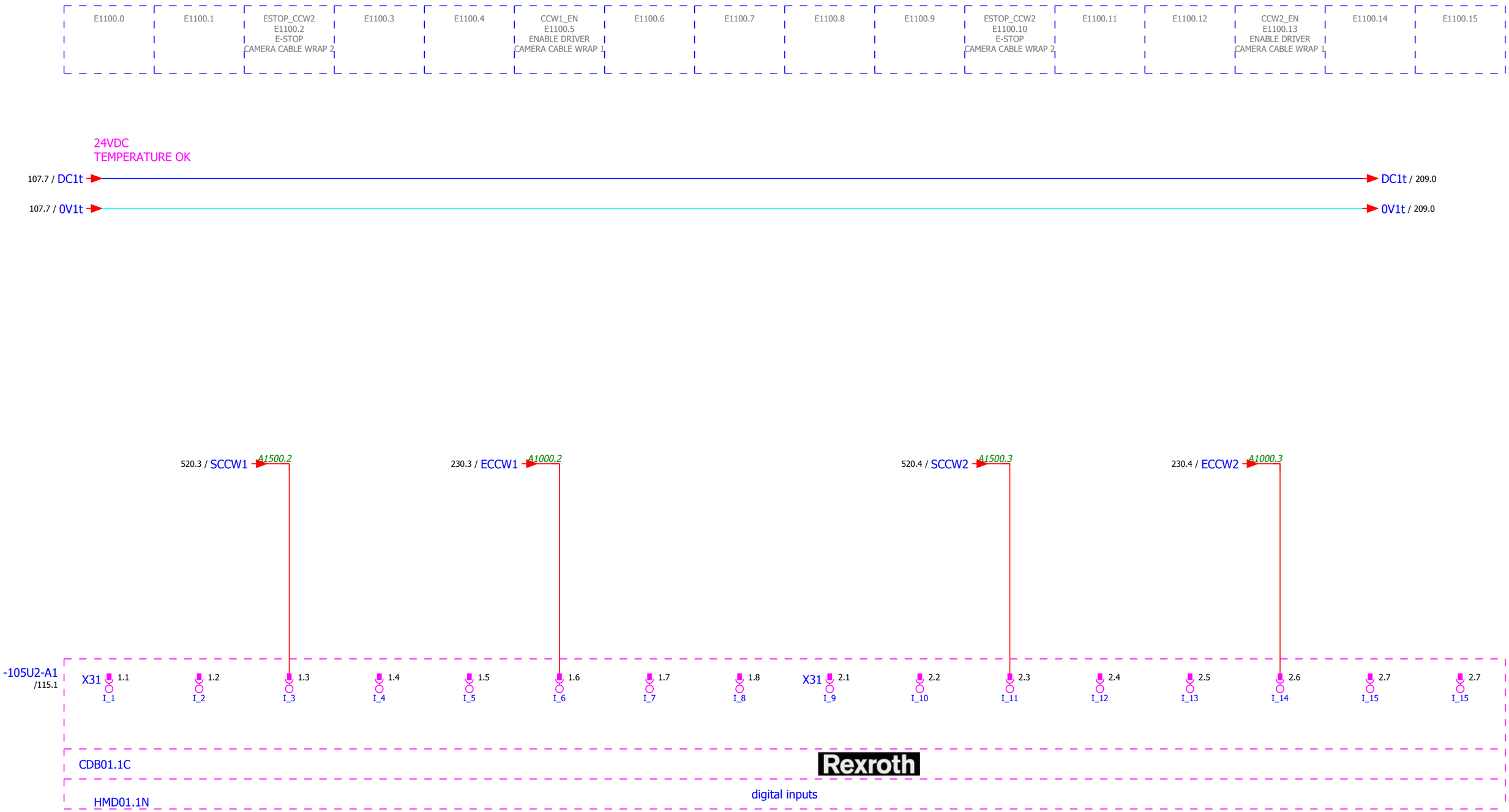

IK4 TEKNIKER Research Alliance
IK4-TEKNIKER
AVDA. OTAOLA 20
20600 Eibar (Gipuzkoa) Spain
Tfno.:(+34) 943 206744
Fax: (+34) 943 202757
Web: www.tekniker.es

Date	23/02/2017						
Reviewed	F.LÓPEZ	2.3	15/12/2017	JOSE MANUEL			
Drew by	jcastano	Review	Date	Name	Review	Date	Name

3151_LSST
MCS Design Electrical Schematics
LSST TELESCOPE

Replaces | Replaced by

CONTROL MOTOR 1 CAMERA CABLE WRAP

Customer:
EMPRESARIOS AGRUPADOS
C/Magallanes, 3
28015 MADRID
91 3098000
http://www.empresariosagrupados.es/

= E1
+ TMA-CCWAUX-CS-CBT-0101

FAULT DRIVER CAMERA CABLE WRAP 1 CCW1_F A1100.1	A1100.2	A1100.3	FAULT DRIVER CAMERA CABLE WRAP 2 CCW2_F A1100.4	A1100.5	A1100.6

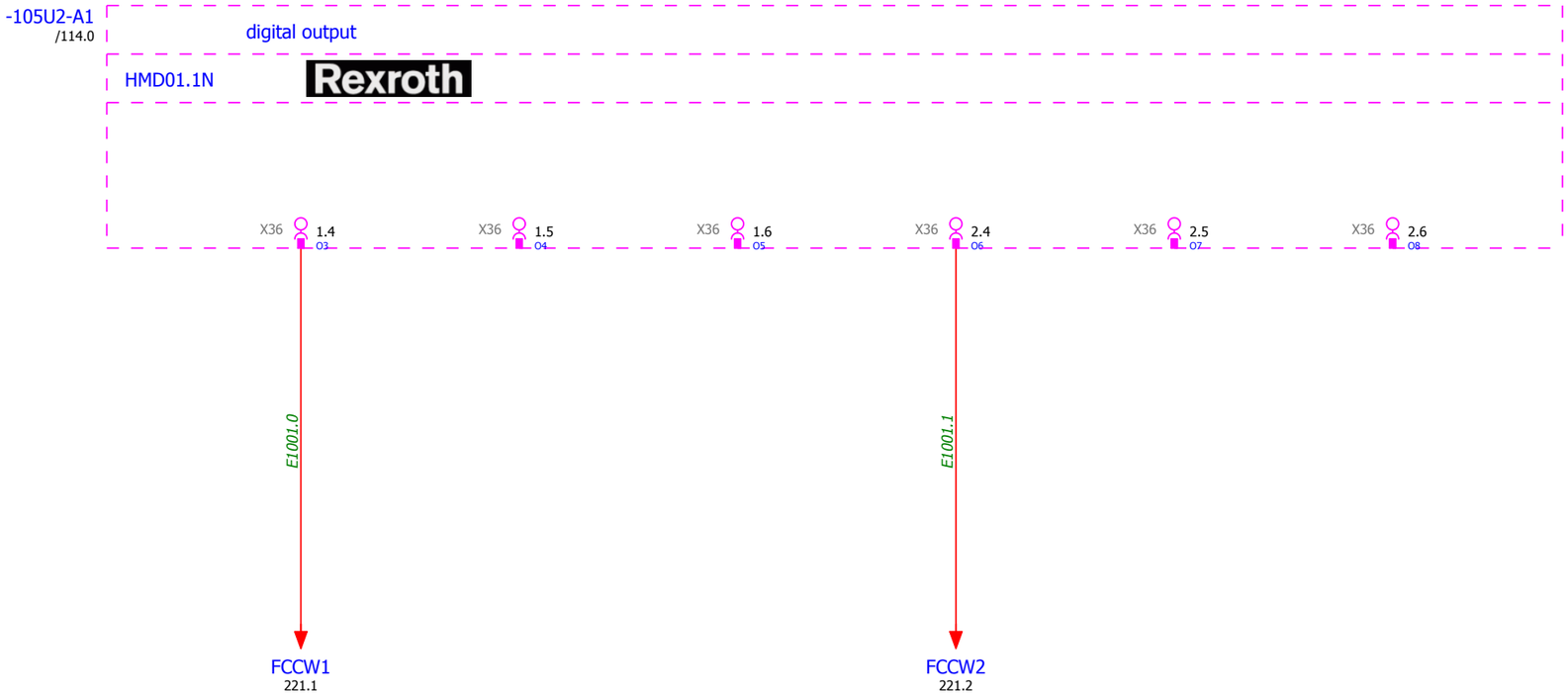

IK4-TEKNIKER
AVDA. OTAOLA 20
20600 Eibar (Gipuzkoa) Spain
Tfno.:(+34) 943 206744
Fax: (+34) 943 202757
Web: www.tekniker.es

Date	23/02/2017						
Reviewed	F.LÓPEZ	2.3	15/12/2017	JOSE MANUEL			
Drew by	jcastano	Review	Date	Name	Review	Date	Name

3151_LSST
MCS Design Electrical Schematics
LSST TELESCOPE

Replaces | Replaced by

CONTROL MOTOR 2 CAMERA CABLE

Customer:
EMPRESARIOS AGRUPADOS
C/Magallanes, 3
28015 MADRID
91 3098000
http://www.empresariosagrupados.es/

= E1
+ TMA-CCWAUX-CS-CBT-0101

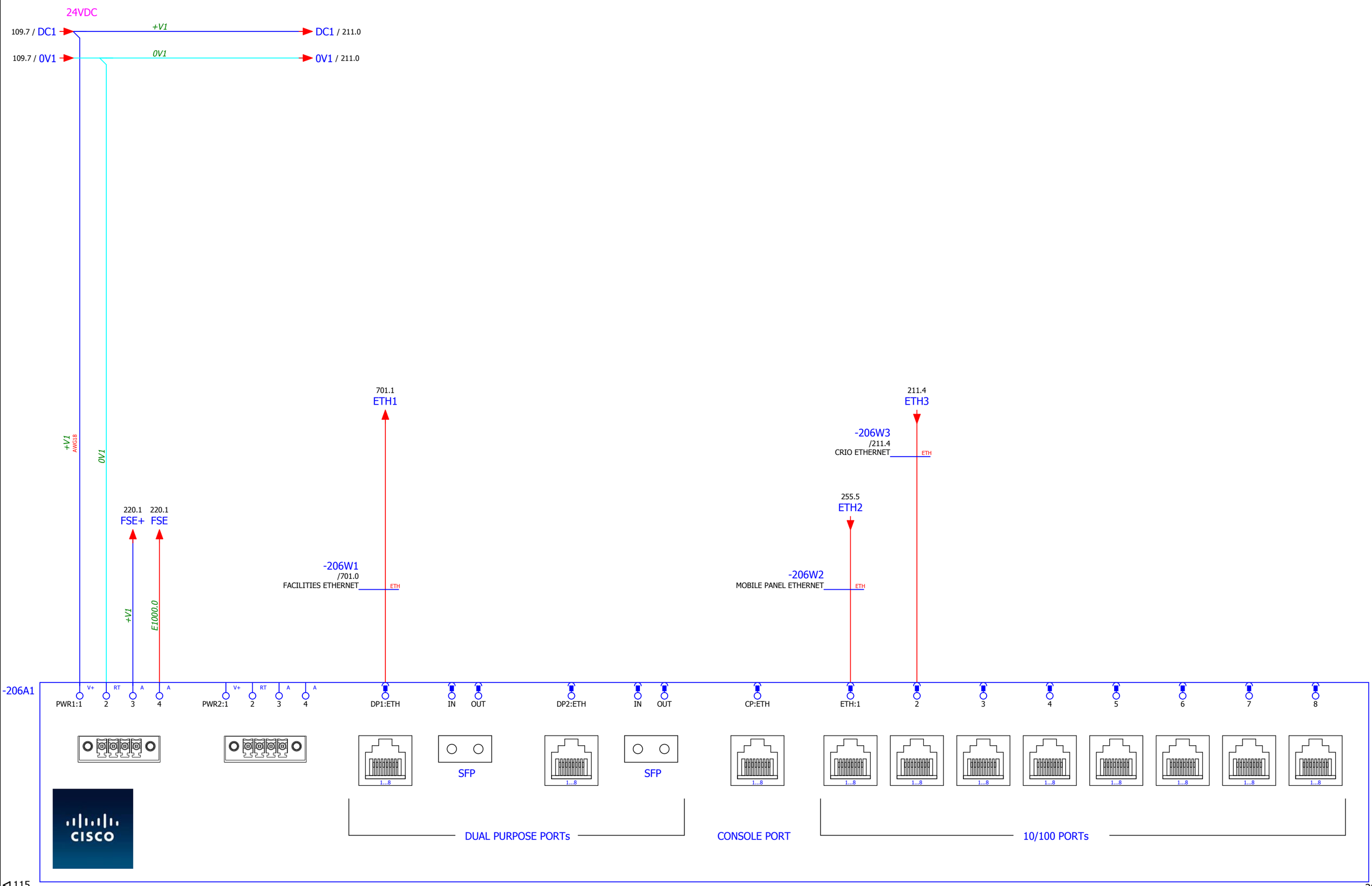

IK4 TEKNIKER Research Alliance

IK4-TEKNIKER
AVDA. OTAOLA 20
20600 Eibar (Gipuzkoa) Spain
Tfno.:(+34) 943 206744
Fax: (+34) 943 202757
Web: www.tekniker.es

Date	28/11/2017							
Reviewed	F.LÓPEZ	2.3	15/12/2017	JOSE MANUEL				
Drew by	JOSE MANUEL	Review	Date	Name	Review	Date	Name	

3151_LSST

MCS Design Electrical Schematics

LSST TELESCOPE

Replaces | Replaced by

ETHERNET SWITCH

Customer: EMPRESARIOS AGRUPADOS
C/Magallanes, 3
28015 MADRID
91 3098000
http://www.empresariosagrupados.es/

= E1

+ TMA-CCWAUX-CS-CBT-0101

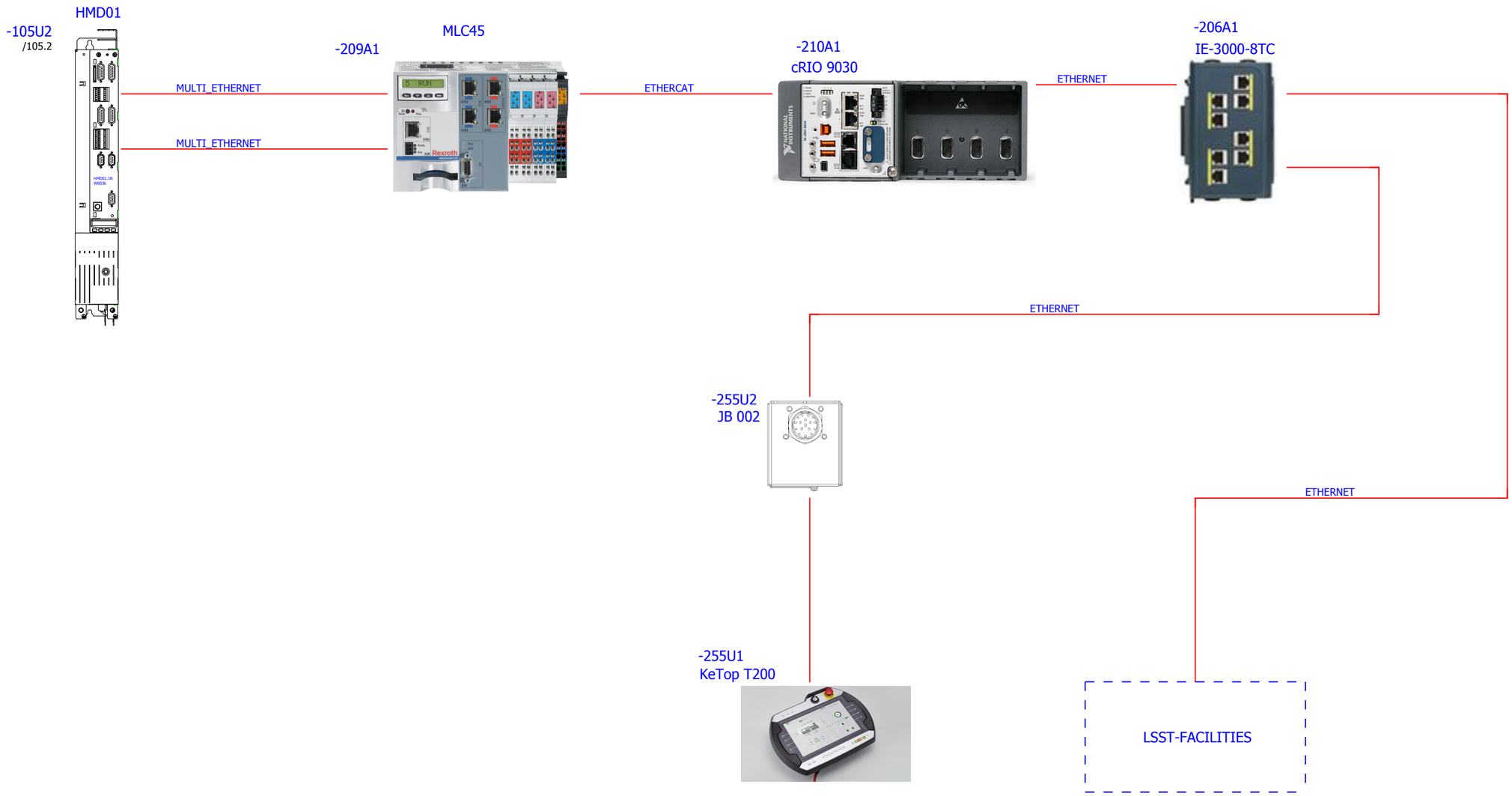

IK4-TEKNIKER
AVDA. OTAOLA 20
20600 Eibar (Gipuzkoa) Spain
Tfno.:(+34) 943 206744
Fax: (+34) 943 202757
Web: www.tekniker.es

Date	23/02/2017						
Reviewed	F.LÓPEZ	2.3	15/12/2017	JOSE MANUEL			
Drew by	jcastano	Review	Date	Name	Review	Date	Name

3151_LSST

MCS Design Electrical Schematics

LSST TELESCOPE

Replaces

Replaced by

NETWORK BLOCK DIAGRAM

Customer:

EMPRESARIOS AGRUPADOS

C/Magallanes, 3
28015 MADRID
91 3098000

http://www.empresariosagrupados.es/

= E1

+ TMA-CCWAUX-CS-CBT-0101

Page 207

Total number 710

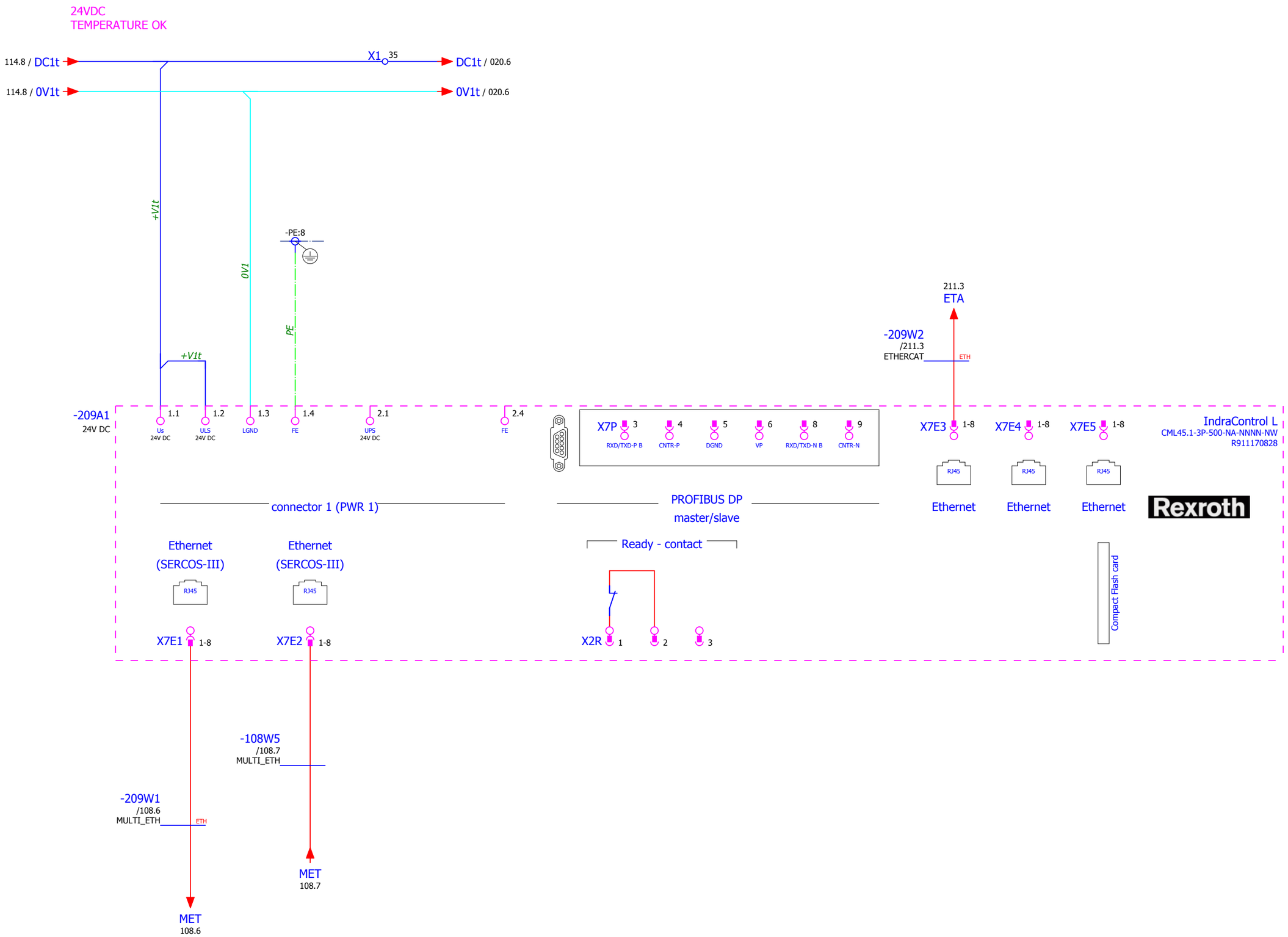

IK4 TEKNIKER Research Alliance
IK4-TEKNIKER
AVDA. OTAOLA 20
20600 Eibar (Gipuzkoa) Spain
Tfno.:(+34) 943 206744
Fax: (+34) 943 202757
Web: www.tekniker.es

Date	27/03/2017						
Reviewed	F.LÓPEZ	2.3	15/12/2017	JOSE MANUEL			
Drew by	jcastano	Review	Date	Name	Review	Date	Name

3151_LSST
MCS Design Electrical Schematics
LSST TELESCOPE
Replaces
Replaced by

CML CONTROL

Customer:
EMPRESARIOS AGRUPADOS
C/Magallanes, 3
28015 MADRID
91 3098000
http://www.empresariosagrupados.es/

= E1
+ TMA-CCWAUX-CS-CBT-0101

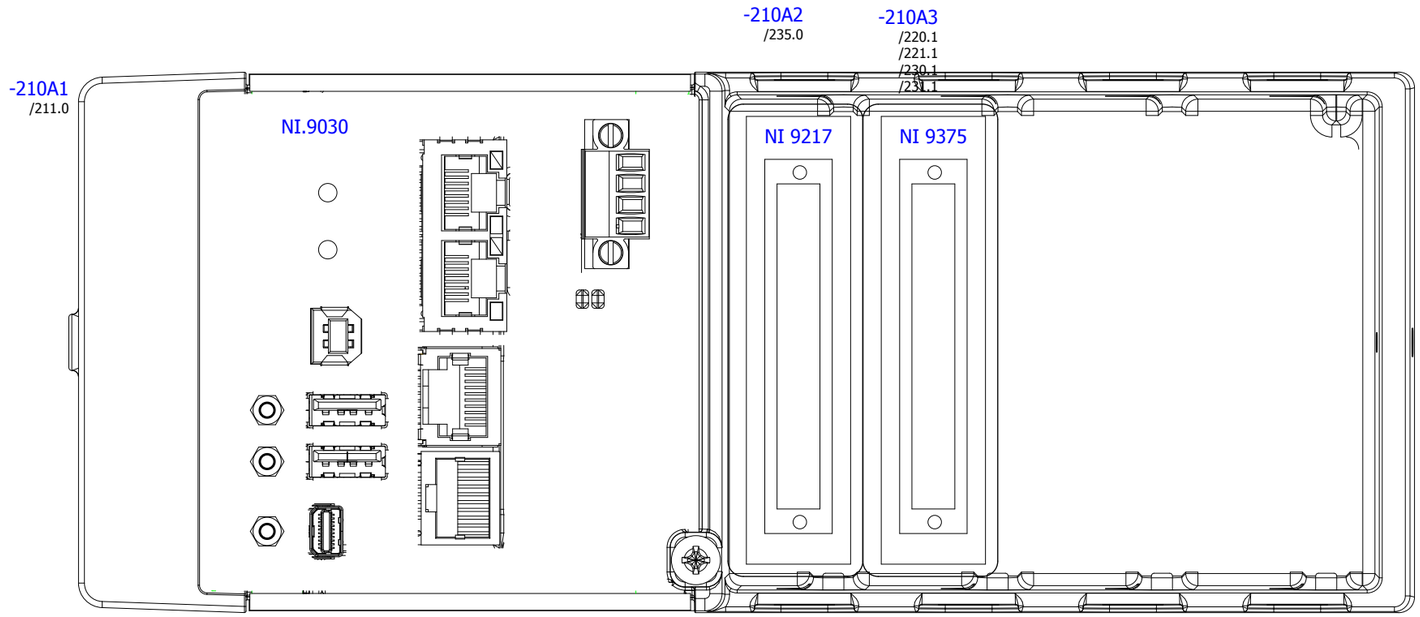

IK4 TEKNIKER Research Alliance
IK4-TEKNIKER
AVDA. OTAOLA 20
20600 Eibar (Gipuzkoa) Spain
Tfno.:(+34) 943 206744
Fax: (+34) 943 202757
Web: www.tekniker.es

Date	23/02/2017						
Reviewed	F.LÓPEZ	2.3	15/12/2017	JOSE MANUEL			
Drew by	jcastano	Review	Date	Name	Review	Date	Name

3151_LSST
MCS Design Electrical Schematics
LSST TELESCOPE
Replaces
Replaced by

CRIO SYSTEM

Customer:
EMPRESARIOS AGRUPADOS
C/Magallanes, 3
28015 MADRID
91 3098000
http://www.empresariosagrupados.es/

= E1
+ TMA-CCWAUX-CS-CBT-0101

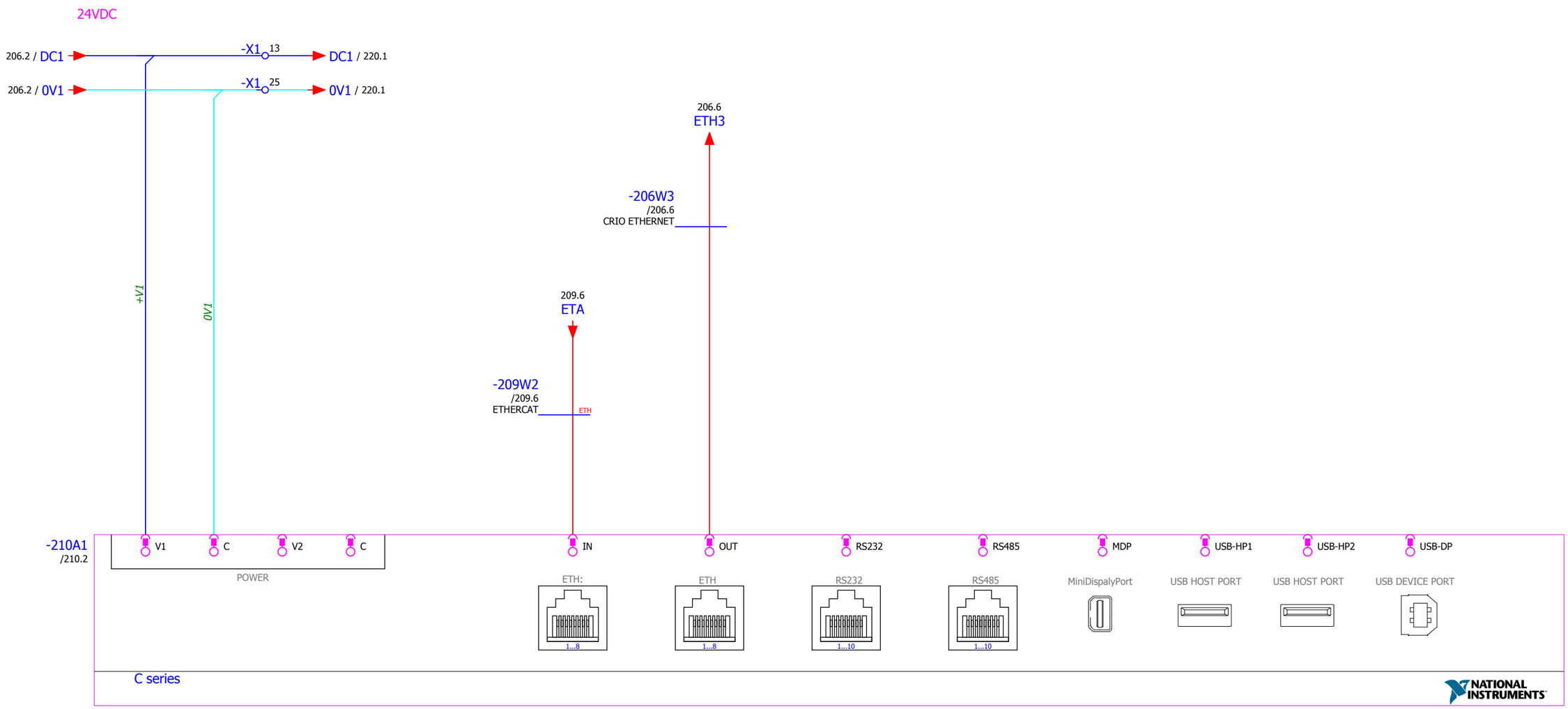

IK4-TEKNIKER
AVDA. OTAOLA 20
20600 Eibar (Gipuzkoa) Spain
Tfno.:(+34) 943 206744
Fax: (+34) 943 202757
Web: www.tekniker.es

Date	28/11/2017						
Reviewed	F.LÓPEZ	2.3	15/12/2017	JOSE MANUEL			
Drew by	JOSE MANUEL	Review	Date	Name	Review	Date	Name

3151_LSST
MCS Design Electrical Schematics
LSST TELESCOPE

Replaces | Replaced by

CRIO POWER

Customer: EMPRESARIOS AGRUPADOS
C/Magallanes, 3
28015 MADRID
91 3098000
http://www.empresariosagrupados.es/

= E1
+ TMA-CCWAUX-CS-CBT-0101

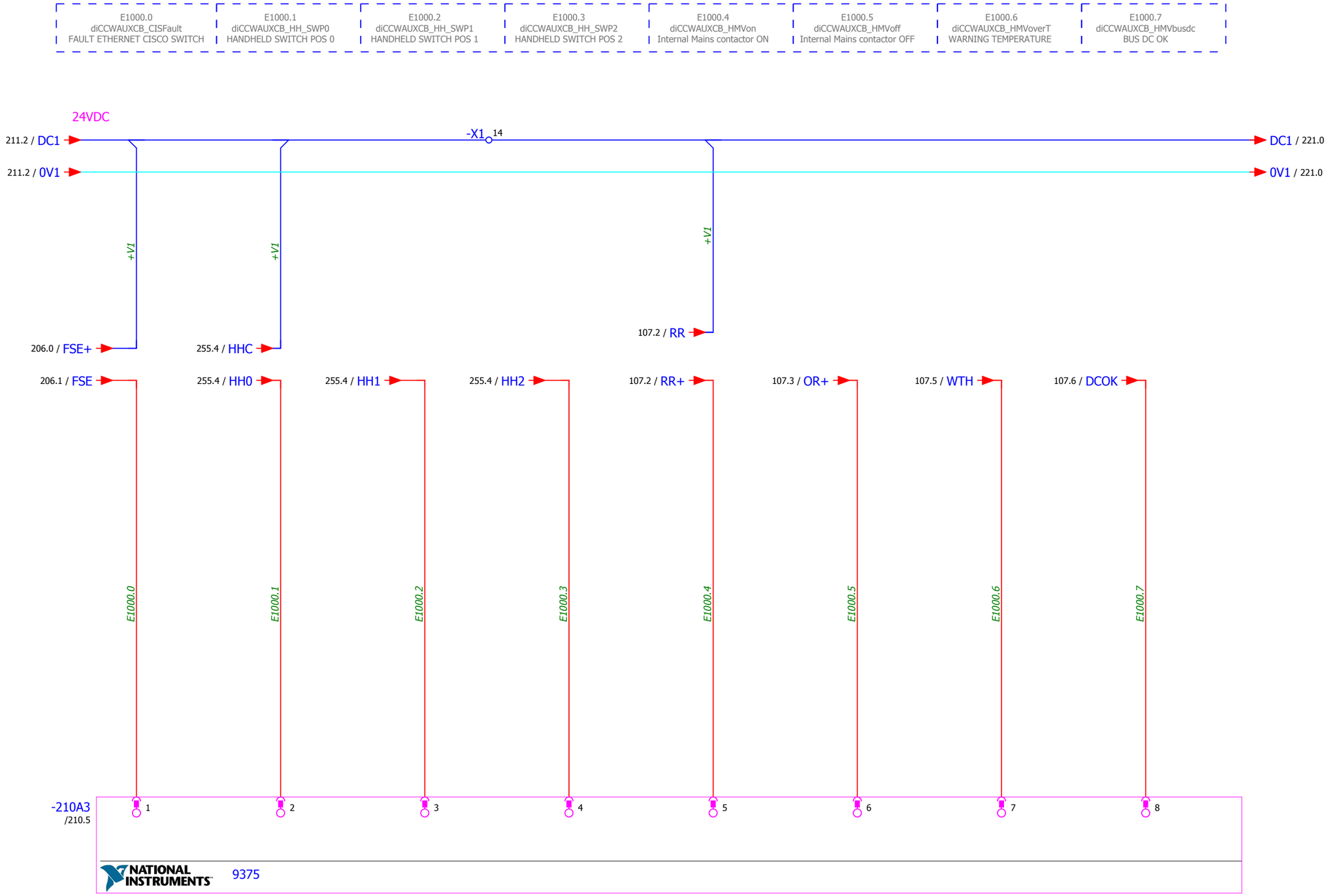

IK4 TEKNIKER Research Alliance

IK4-TEKNIKER
AVDA. OTAOLA 20
20600 Eibar (Gipuzkoa) Spain
Tfno.:(+34) 943 206744
Fax: (+34) 943 202757
Web: www.tekniker.es

Date	23/02/2017						
Reviewed	F.LÓPEZ	2.3	15/12/2017	JOSE MANUEL			
Drew by	jcastano	Review	Date	Name	Review	Date	Name

3151_LSST

MCS Design Electrical Schematics

LSST TELESCOPE

Replaces

Replaced by

DIGITAL INPUT

Customer:

EMPRESARIOS AGRUPADOS

C/Magallanes, 3
28015 MADRID
91 3098000

http://www.empresariosagrupados.es/

= E1

+ TMA-CCWAUX-CS-CBT-0101

◁ 220

230 ▷

IK4 TEKNIKER Research Alliance	IK4-TEKNIKER AVDA. OTAOLA 20 20600 Eibar (Gipuzkoa) Spain Tfno.:(+34) 943 206744 Fax: (+34) 943 202757 Web: www.tekniker.es								3151_LSST	MCS Design Electrical Schematics LSST TELESCOPE	DIGITAL INPUT
		Date	27/03/2017								
		Reviewed	F.LÓPEZ	2.3	15/12/2017	JOSE MANUEL					
		Drew by	jcastano	Review	Date	Name	Review	Date	Name	Replaces	Replaced by

Customer: EMPRESARIOS AGRUPADOS
C/Magallanes, 3
28015 MADRID
91 3098000
http://www.empresariosagrupados.es/

= E1
+ TMA-CCWAUX-CS-CBT-0101

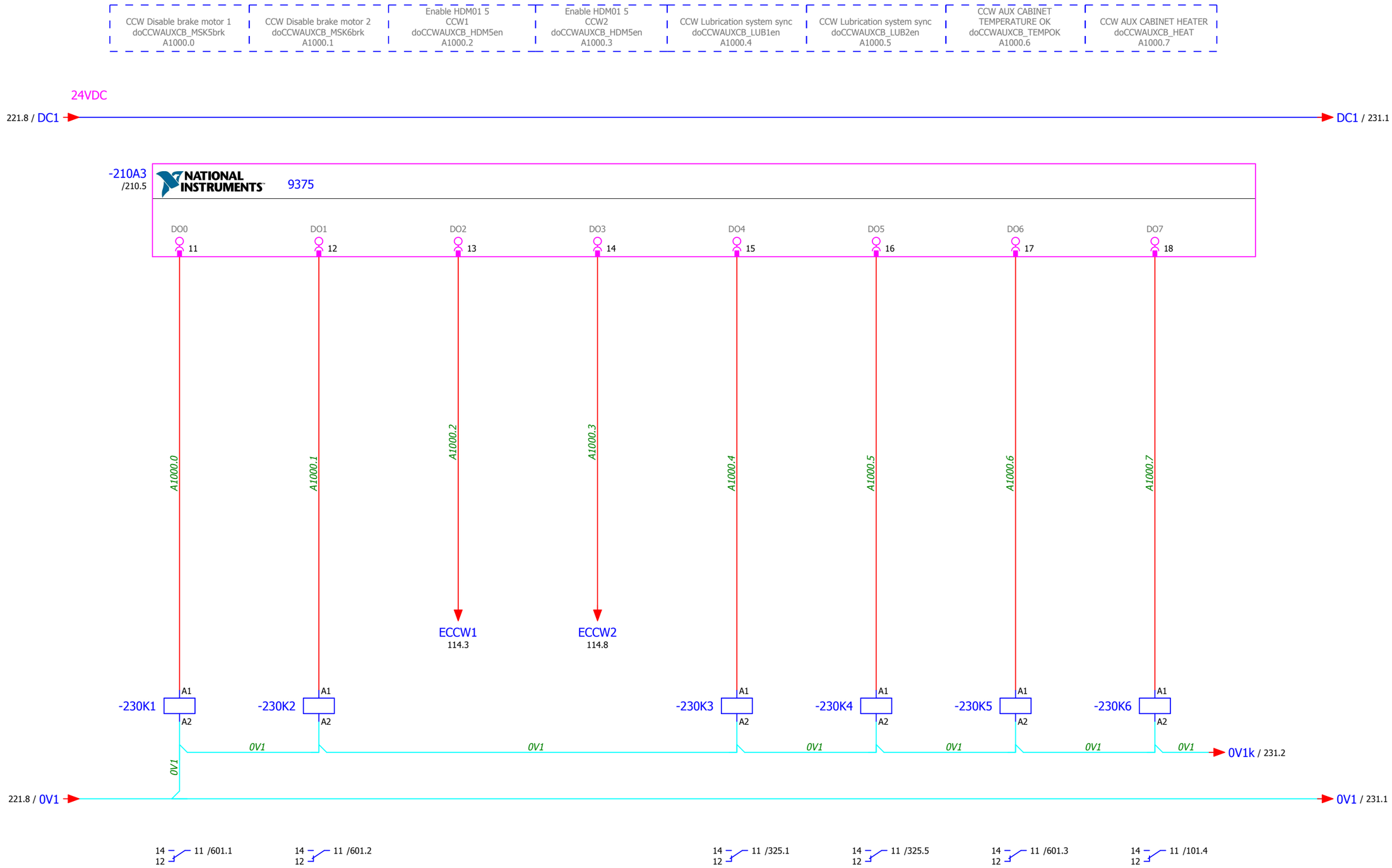

IK4 TEKNIKER Research Alliance

IK4-TEKNIKER
AVDA. OTAOLA 20
20600 Eibar (Gipuzkoa) Spain
Tfno.:(+34) 943 206744
Fax: (+34) 943 202757
Web: www.tekniker.es

Date	23/02/2017						
Reviewed	F.LÓPEZ	2.3	15/12/2017	JOSE MANUEL			
Drew by	jcastano	Review	Date	Name	Review	Date	Name

3151_LSST

MCS Design Electrical Schematics

LSST TELESCOPE

Replaces | Replaced by

DIGITAL OUTPUT

Customer: EMPRESARIOS AGRUPADOS

C/Magallanes, 3
28015 MADRID
91 3098000

http://www.empresariosagrupados.es/

= E1

+ TMA-CCWAUX-CS-CBT-0101

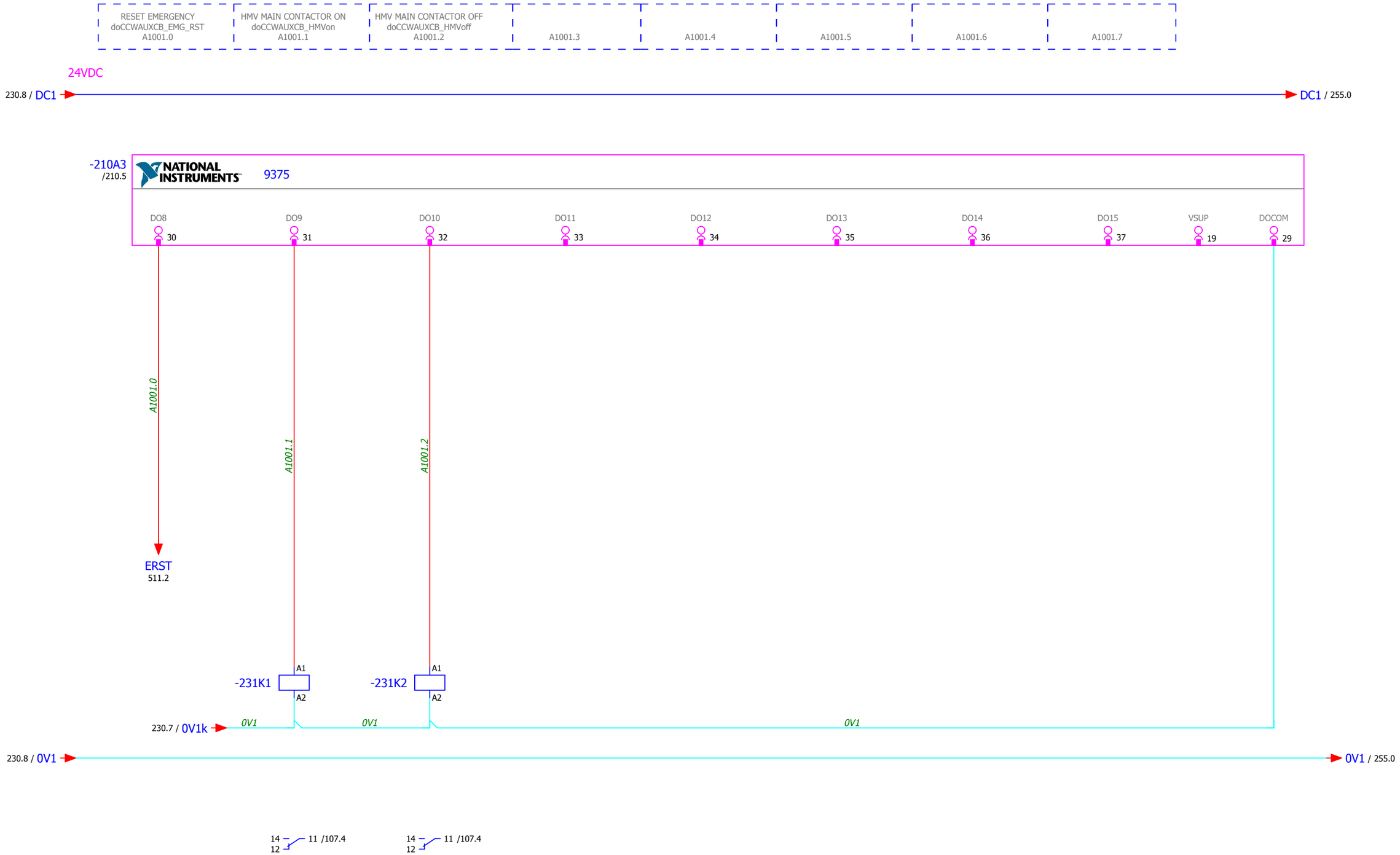

IK4 TEKNIKER Research Alliance

IK4-TEKNIKER
AVDA. OTAOLA 20
20600 Eibar (Gipuzkoa) Spain
Tfno.:(+34) 943 206744
Fax: (+34) 943 202757
Web: www.tekniker.es

Date	23/02/2017						
Reviewed	F.LÓPEZ	2.3	15/12/2017	JOSE MANUEL			
Drew by	jcastano	Review	Date	Name	Review	Date	Name

3151_LSST

MCS Design Electrical Schematics

LSST TELESCOPE

Replaces | Replaced by

DIGITAL OUTPUT

Customer: EMPRESARIOS AGRUPADOS

C/Magallanes, 3
28015 MADRID
91 3098000

http://www.empresariosagrupados.es/

= E1

+ TMA-CCWAUX-CS-CBT-0101

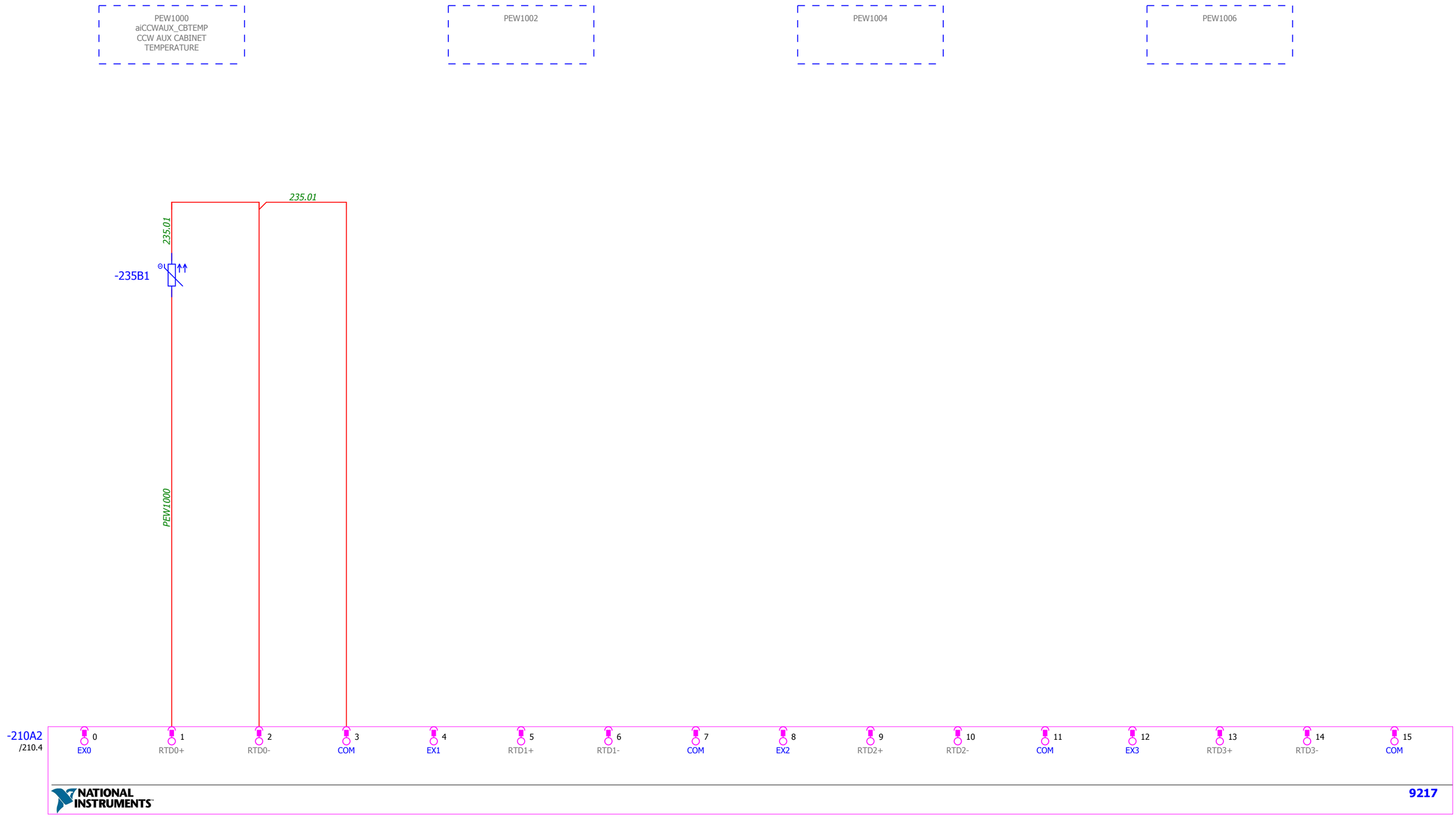

IK4-TEKNIKER
AVDA. OTAOLA 20
20600 Eibar (Gipuzkoa) Spain
Tfno.:(+34) 943 206744
Fax: (+34) 943 202757
Web: www.tekniker.es

Date	23/02/2017						
Reviewed	F.LÓPEZ	2.3	15/12/2017	JOSE MANUEL			
Drew by	jcastano	Review	Date	Name	Review	Date	Name

3151_LSST
MCS Design Electrical Schematics
LSST TELESCOPE
Replaces
Replaced by

TEMPERATURE INPUTS

Customer:
EMPRESARIOS AGRUPADOS
C/Magallanes, 3
28015 MADRID
91 3098000
http://www.empresariosagrupados.es/

= E1
+ TMA-CCWAUX-CS-CBT-0101

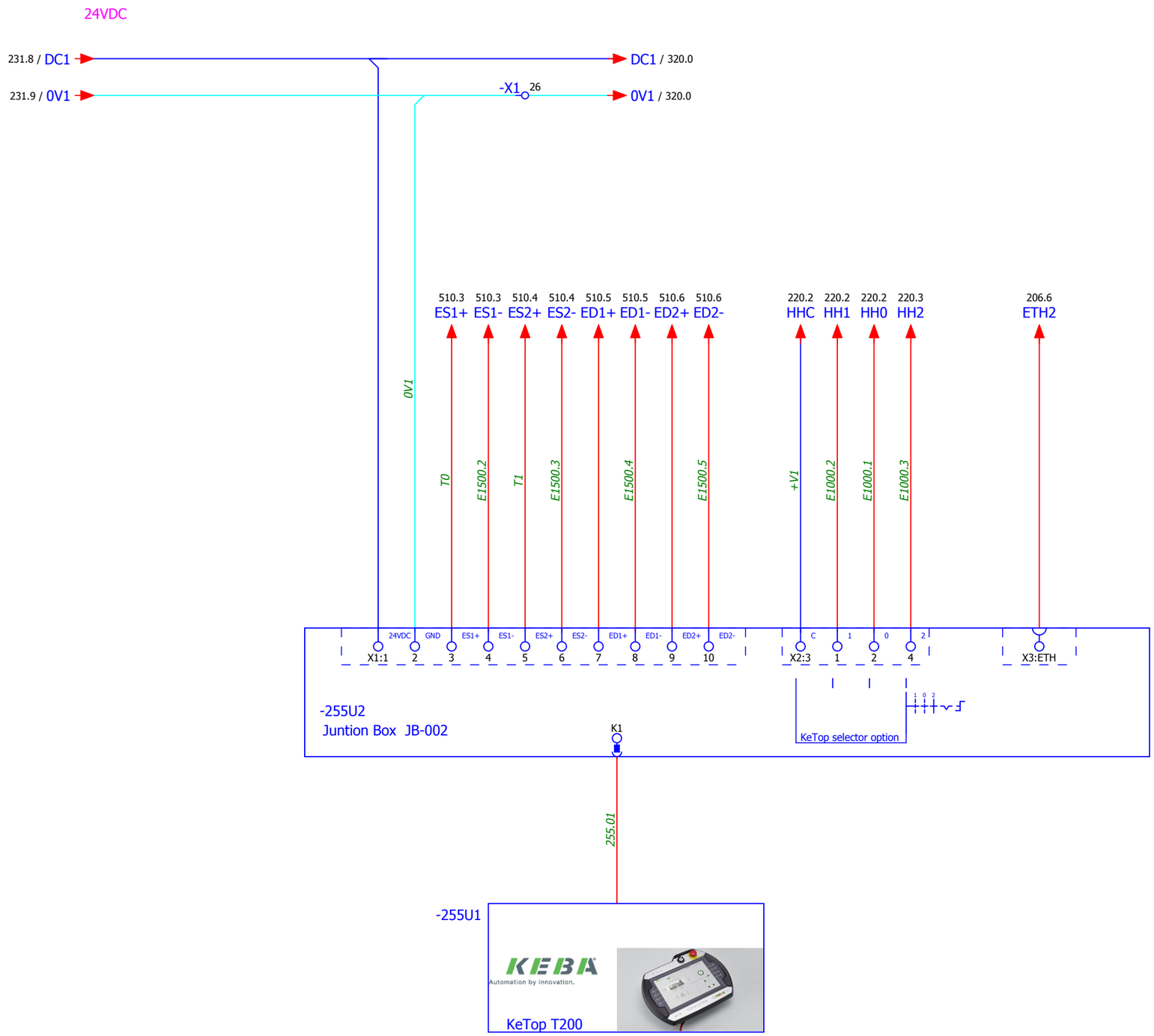

◁ 235

320 ▷

IK4 TEKNIKER
Research Alliance
IK4 TEKNIKER
POLO TECNOLOGICO DE EIBAR
C/Iñaki Goenaga nº 5
20600 Eibar (Gipuzkoa) Spain
Tfno.:(+34) 943 206744
Fax: (+34) 943 202757
Web: www.tekniker.es

Date	27/03/2017						
No traducido	E.LÓPEZ	2.3	15/12/2017	JOSE MANUEL			
Realizado	jcastano	Revisión	Date	Name	Revisión	Date	Name

MCS Design Electrical Schematics
LSST TELESCOPE

Sustituye a: | Replaced by

HANDHELD

Cliente: EMPRESARIOS AGRUPADOS
C/Magallanes, 3
28015 MADRID
91 3098000
http://www.empresariosagrupados.es/

= E1
+ TMA-CCWAUX-CS-CBT-0101

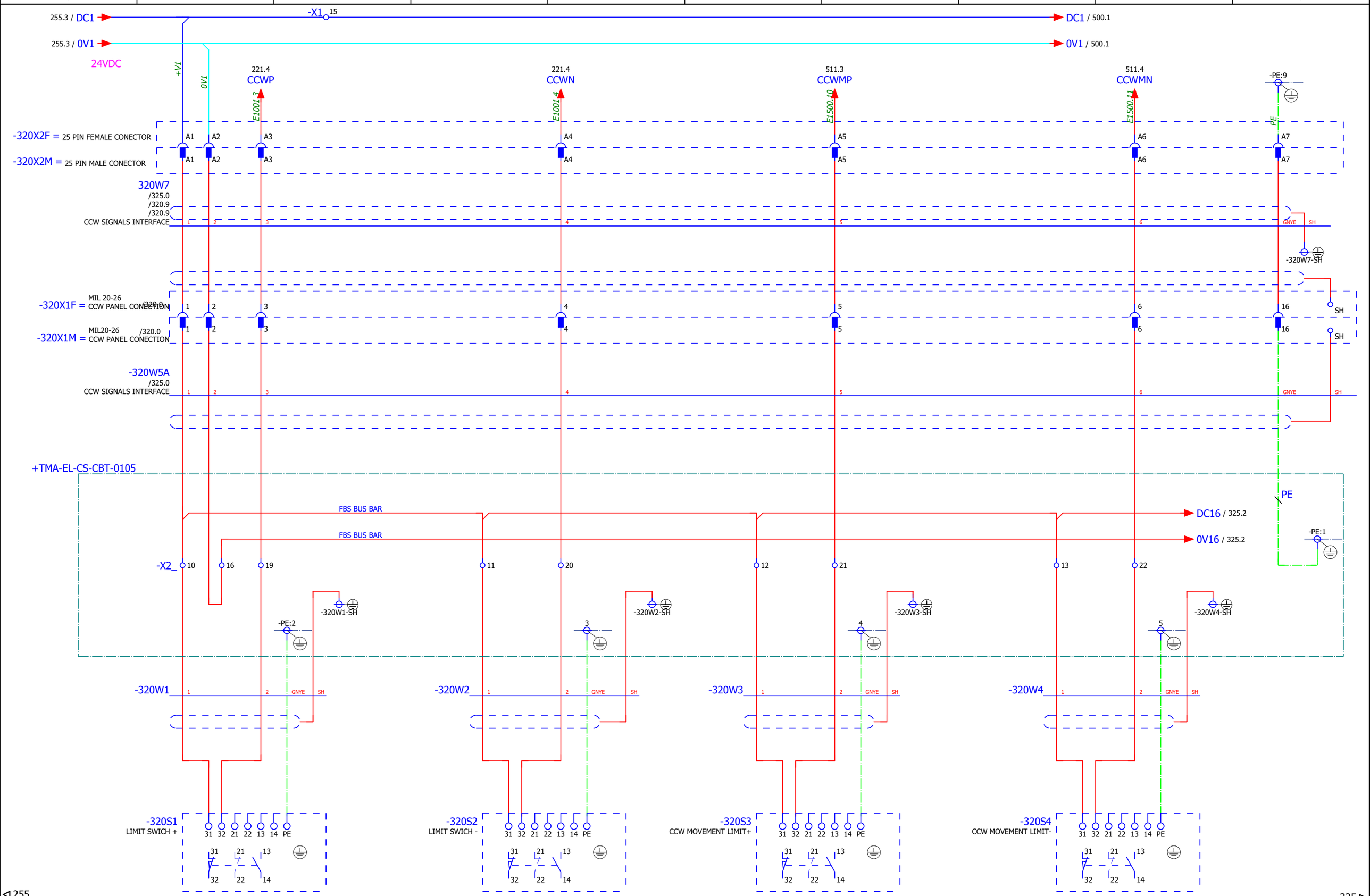

◁ 255

325 ▷

IK4 TEKNIKER Research Alliance

IK4-TEKNIKER
AVDA. OTAOLA 20
20600 Eibar (Gipuzkoa) Spain
Tfno.:(+34) 943 206744
Fax: (+34) 943 202757
Web: www.tekniker.es

Date	27/03/2017						
Reviewed	F.LÓPEZ	2.3	15/12/2017	JOSE MANUEL			
Drew by	jcastano	Review	Date	Name	Review	Date	Name

3151_LSST

MCS Design Electrical Schematics

LSST TELESCOPE

Replaces | Replaced by

CAMERA CABLE WRAP LIMIT SWITCHES

Customer: EMPRESARIOS AGRUPADOS

EMPRESARIOS AGRUPADOS
C/Magallanes, 3
28015 MADRID
91 3098000
http://www.empresariosagrupados.es/

= E1

+ TMA-CCWAUX-CS-CBT-0101

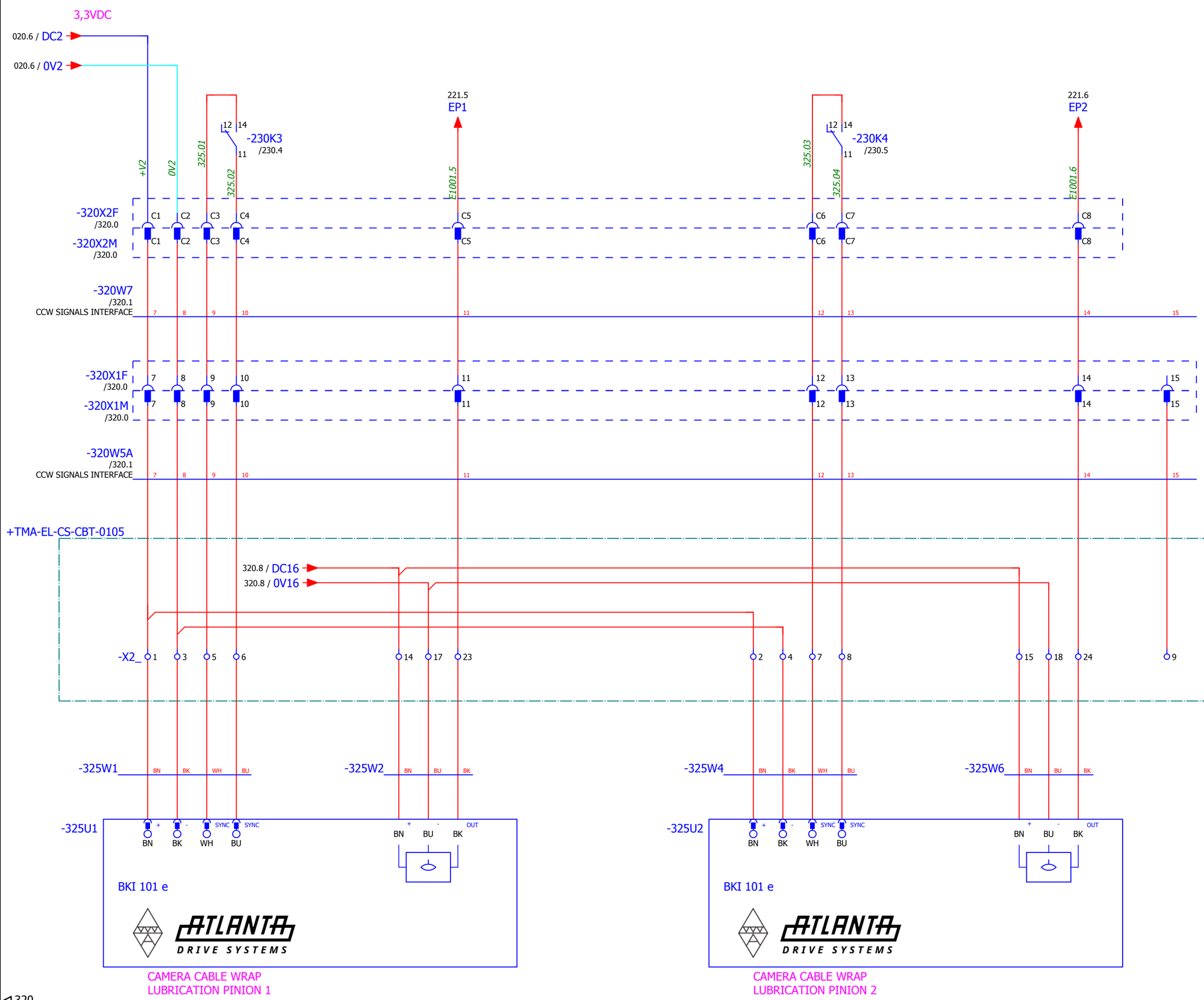

◁ 320

500 ▷

IK4-TEKNIKER
AVDA. OTAOLA 20
20600 Eibar (Gipuzkoa) Spain
Tfno.:(+34) 943 206744
Fax: (+34) 943 202757
Web: www.tekniker.es

Date	05/07/2017						
Reviewed	F.LÓPEZ	2.3	15/12/2017	JOSE MANUEL			
Drew by	JOSE MANUEL	Review	Date	Name	Review	Date	Name

3151_LSST

MCS Design Electrical Schematics

LSST TELESCOPE

Replaces | Replaced by

PINION LUBRICATION

Customer: EMPRESARIOS AGRUPADOS
C/Magallanes, 3
28015 MADRID
91 3098000
http://www.empresariosagrupados.es/

= E1

+ TMA-CCWAUX-CS-CBT-0101

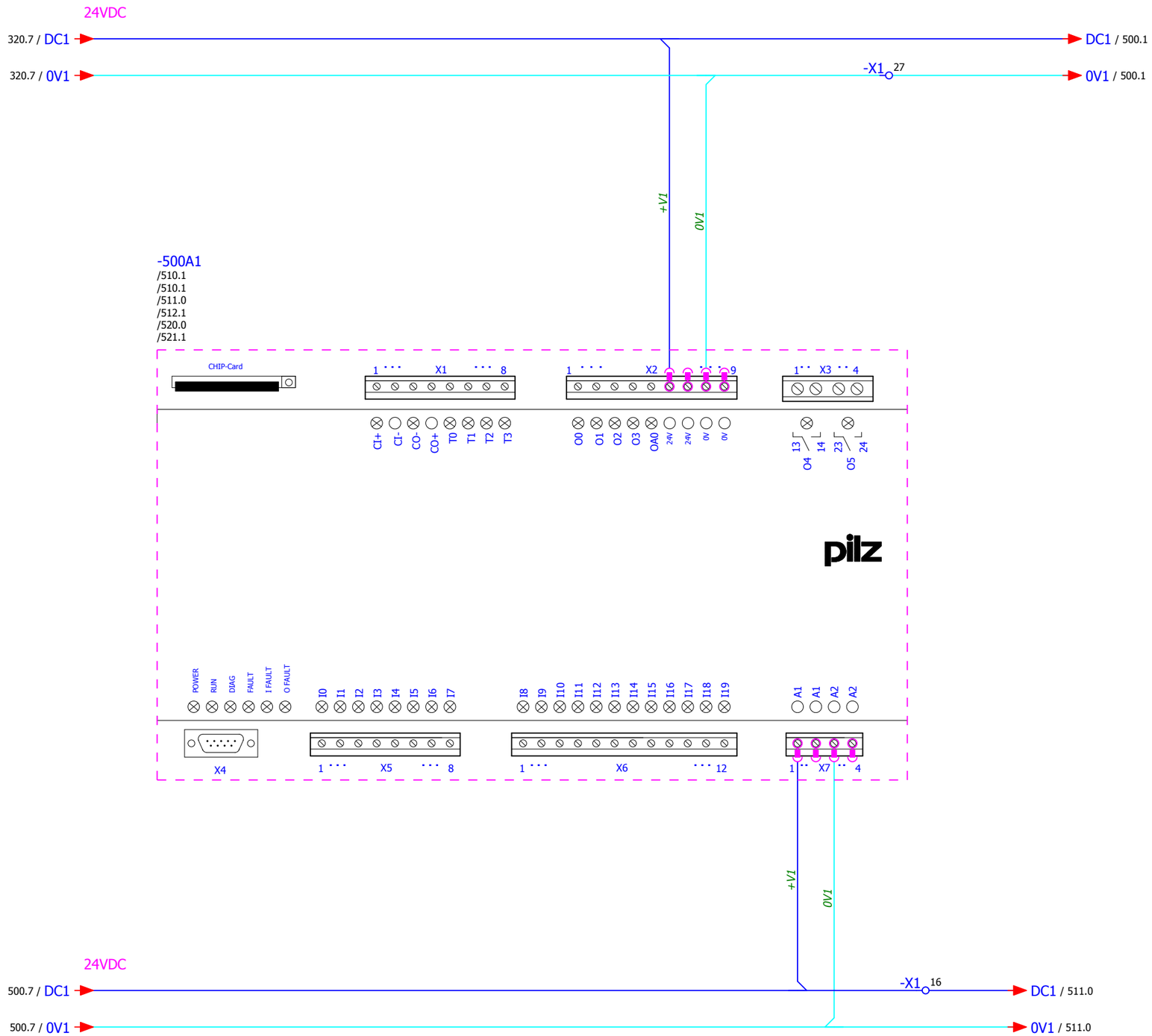

IK4 TEKNIKER Research Alliance

IK4-TEKNIKER
AVDA. OTAOLA 20
20600 Eibar (Gipuzkoa) Spain
Tfno.:(+34) 943 206744
Fax: (+34) 943 202757
Web: www.tekniker.es

Date	23/02/2017						
Reviewed	F.LÓPEZ	2.3	15/12/2017	JOSE MANUEL			
Drew by	jcastano	Review	Date	Name	Review	Date	Name

3151_LSST

MCS Design Electrical Schematics

LSST TELESCOPE

Replaces | Replaced by

EMERGENCY CIRCUIT

Customer: EMPRESARIOS AGRUPADOS

C/Magallanes, 3
28015 MADRID
91 3098000

http://www.empresariosagrupados.es/

= E1

+ TMA-CCWAUX-CS-CBT-0101

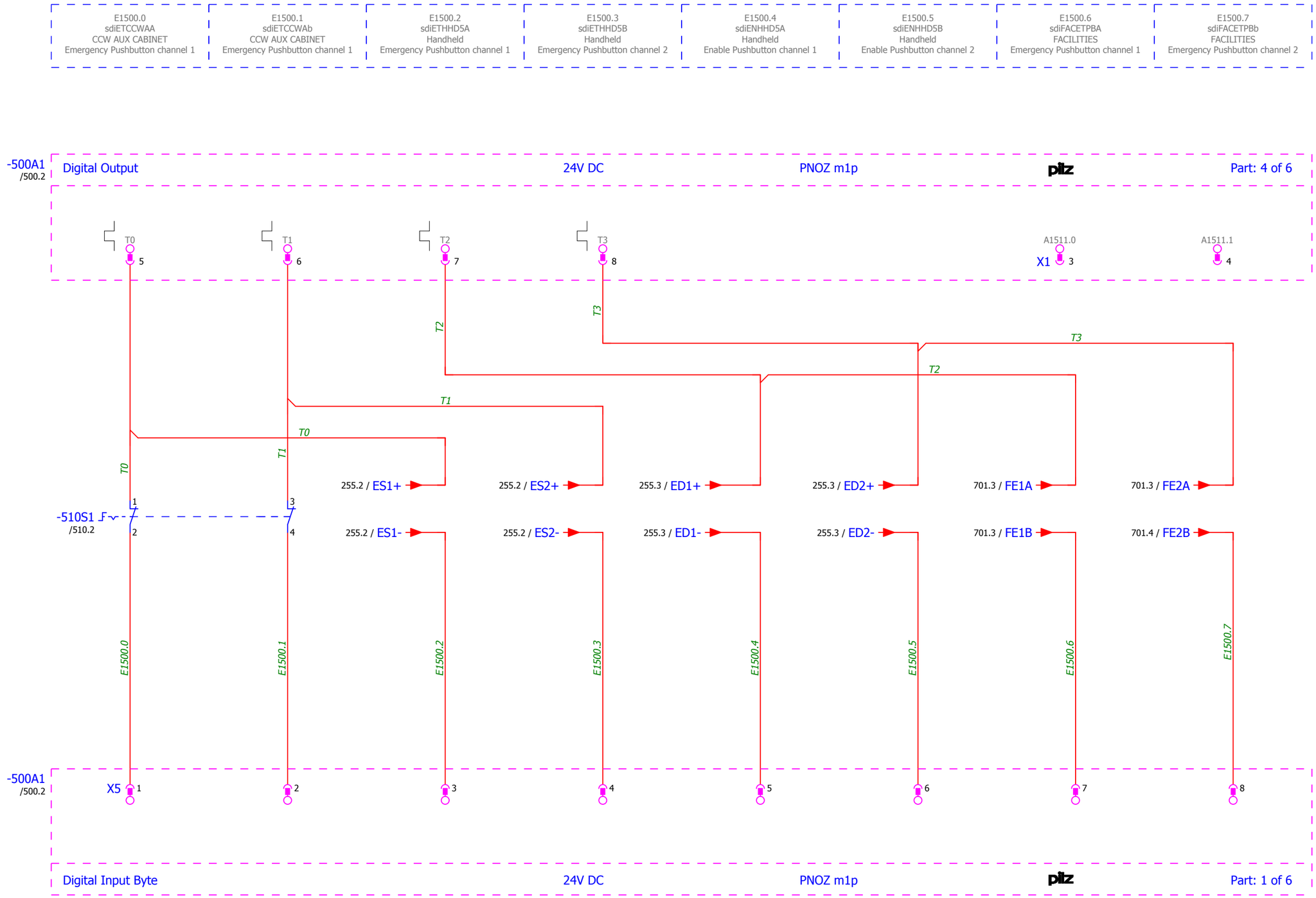

IK4 TEKNIKER Research Alliance
IK4-TEKNIKER
AVDA. OTAOLA 20
20600 Eibar (Gipuzkoa) Spain
Tfno.:(+34) 943 206744
Fax: (+34) 943 202757
Web: www.tekniker.es

Date	23/02/2017						
Reviewed	F.LÓPEZ	2.3	15/12/2017	JOSE MANUEL			
Drew by	jcastano	Review	Date	Name	Review	Date	Name

3151_LSST
MCS Design Electrical Schematics
LSST TELESCOPE

Replaces | Replaced by

SAFETY DIGITAL INPUT

Customer: EMPRESARIOS AGRUPADOS
C/Magallanes, 3
28015 MADRID
91 3098000
http://www.empresariosagrupados.es/

= E1
+ TMA-CCWAUX-CS-CBT-0101

IK4 TEKNIKER Research Alliance

IK4-TEKNIKER
AVDA. OTAOLA 20
20600 Eibar (Gipuzkoa) Spain
Tfno.:(+34) 943 206744
Fax: (+34) 943 202757
Web: www.tekniker.es

Date	23/02/2017						
Reviewed	F.LÓPEZ	2.3	15/12/2017	JOSE MANUEL			
Drew by	jcastano	Review	Date	Name	Review	Date	Name

3151_LSST

MCS Design Electrical Schematics

LSST TELESCOPE

Replaces | Replaced by

SAFETY DIGITAL INPUT

Customer: EMPRESARIOS AGRUPADOS

C/Magallanes, 3
28015 MADRID
91 3098000
http://www.empresariosagrupados.es/

= E1

+ TMA-CCWAUX-CS-CBT-0101

E1500.16	E1500.17	E1500.18	E1500.19	E1510.0	E1510.1		

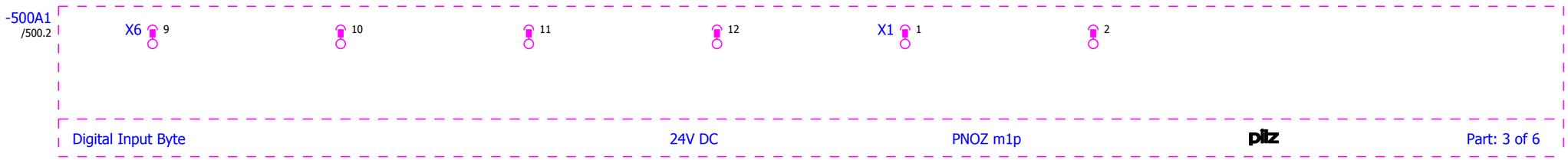

IK4 TEKNIKER Research Alliance
IK4-TEKNIKER
AVDA. OTAOLA 20
20600 Eibar (Gipuzkoa) Spain
Tfno.:(+34) 943 206744
Fax: (+34) 943 202757
Web: www.tekniker.es

Date	23/02/2017						
Reviewed	F.LÓPEZ	2.3	15/12/2017	JOSE MANUEL			
Drew by	jcastano	Review	Date	Name	Review	Date	Name

3151_LSST
MCS Design Electrical Schematics
LSST TELESCOPE

Replaces | Replaced by

SAFETY DIGITAL INPUT

Customer:
EMPRESARIOS AGRUPADOS
C/Magallanes, 3
28015 MADRID
91 3098000
http://www.empresariosagrupados.es/

= E1
+ TMA-CCWAUX-CS-CBT-0101

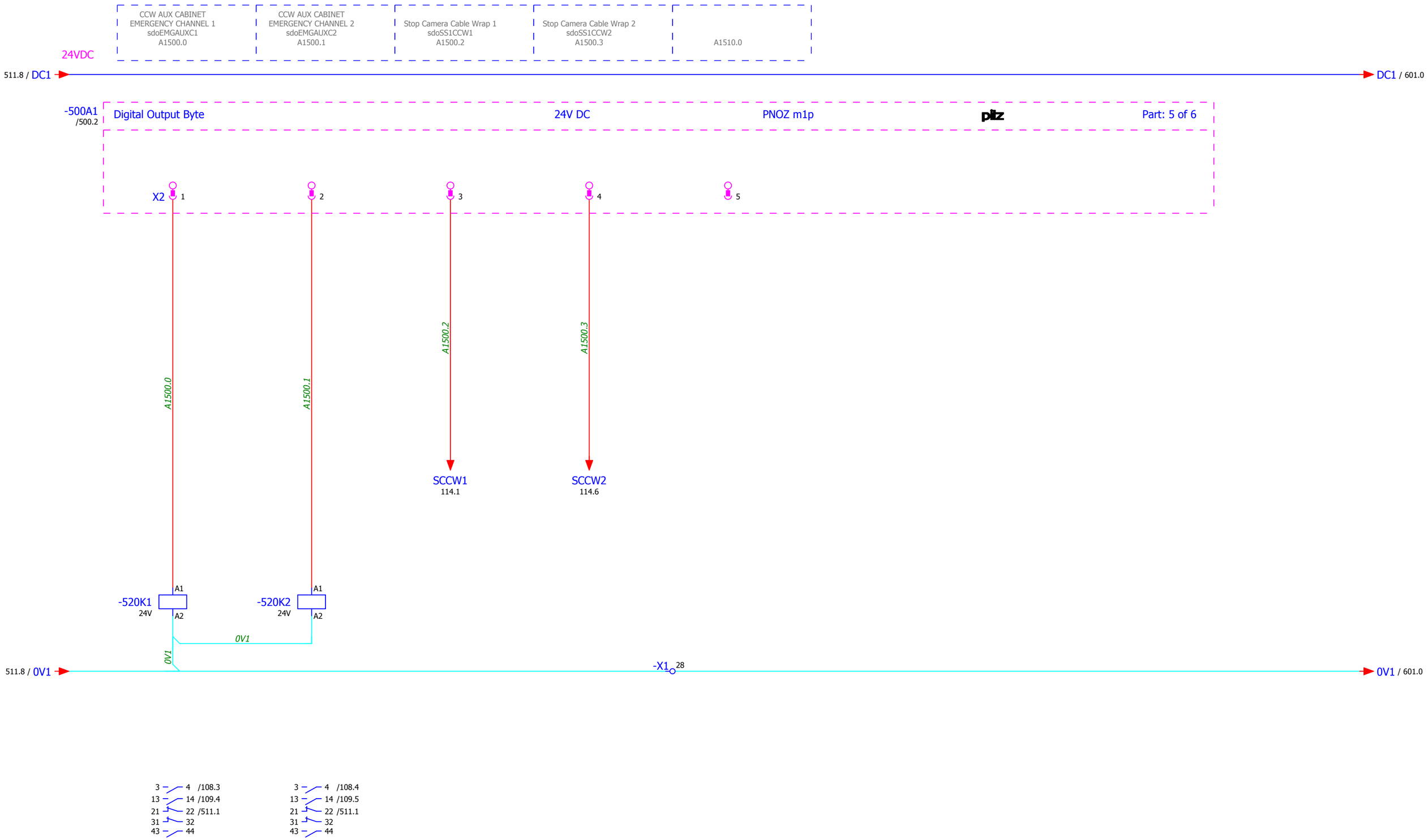

◁ 512

521 ▷

IK4 TEKNIKER Research Alliance
IK4-TEKNIKER
AVDA. OTAOLA 20
20600 Eibar (Gipuzkoa) Spain
Tfno.:(+34) 943 206744
Fax: (+34) 943 202757
Web: www.tekniker.es

Date	27/03/2017						
Reviewed	F.LÓPEZ	2.3	15/12/2017	JOSE MANUEL			
Drew by	jcastano	Review	Date	Name	Review	Date	Name

3151_LSST

MCS Design Electrical Schematics

LSST TELESCOPE

Replaces | Replaced by

SAFETY DIGITAL OUTPUT

Customer: EMPRESARIOS AGRUPADOS
C/Magallanes, 3
28015 MADRID
91 3098000
http://www.empresariosagrupados.es/

= E1
+ TMA-CCWAUX-CS-CBT-0101

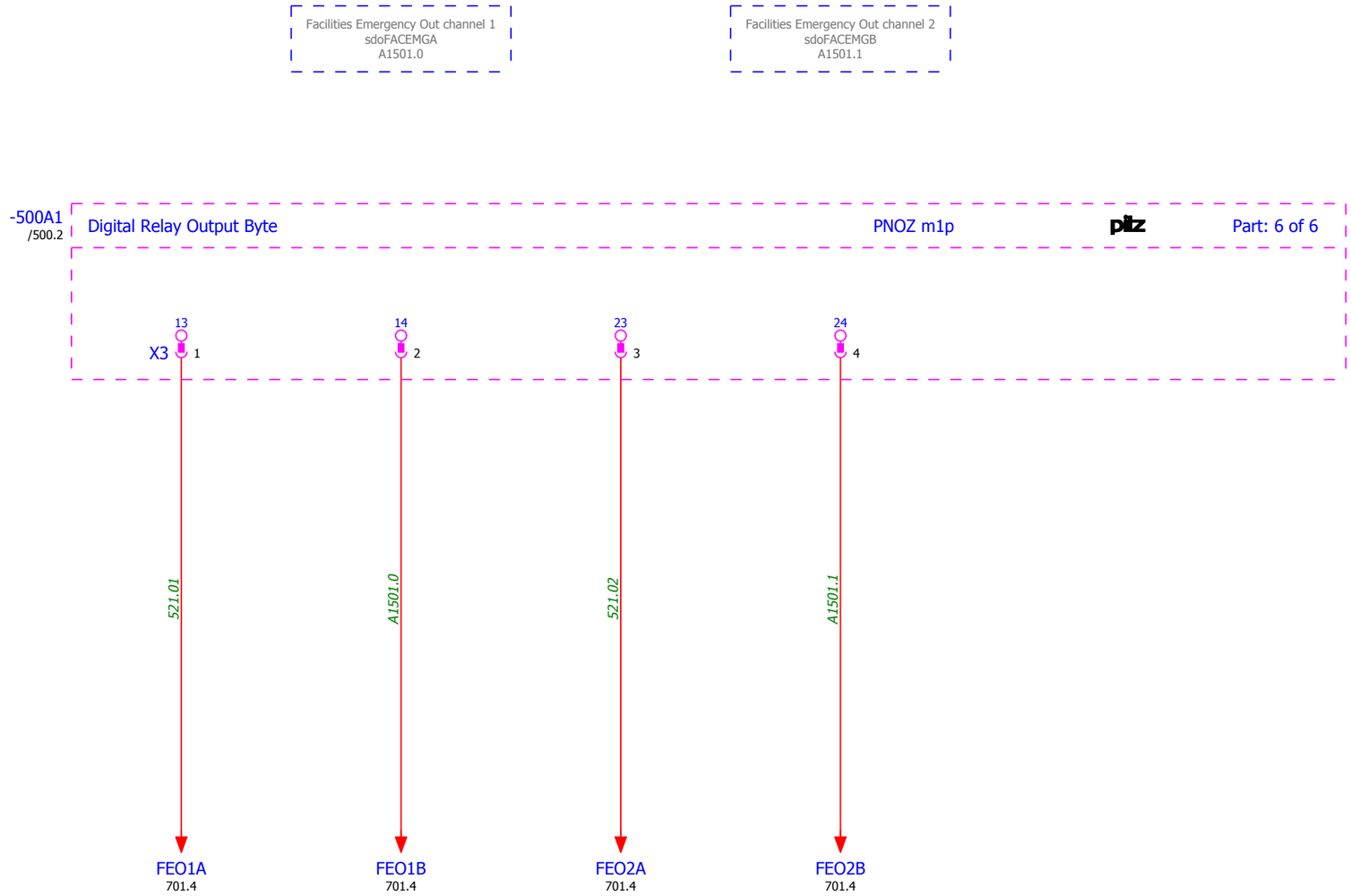

IK4 TEKNIKER Research Alliance

IK4-TEKNIKER
AVDA. OTAOLA 20
20600 Eibar (Gipuzkoa) Spain
Tfno.:(+34) 943 206744
Fax: (+34) 943 202757
Web: www.tekniker.es

Date	23/02/2017						
Reviewed	F.LÓPEZ	2.3	15/12/2017	JOSE MANUEL			
Drew by	jcastano	Review	Date	Name	Review	Date	Name

3151_LSST

MCS Design Electrical Schematics

LSST TELESCOPE

Replaces

Replaced by

SAFETY DIGITAL OUTPUT

Customer:

EMPRESARIOS AGRUPADOS

C/Magallanes, 3
28015 MADRID
91 3098000

http://www.empresariosagrupados.es/

= E1

+ TMA-CCWAUX-CS-CBT-0101

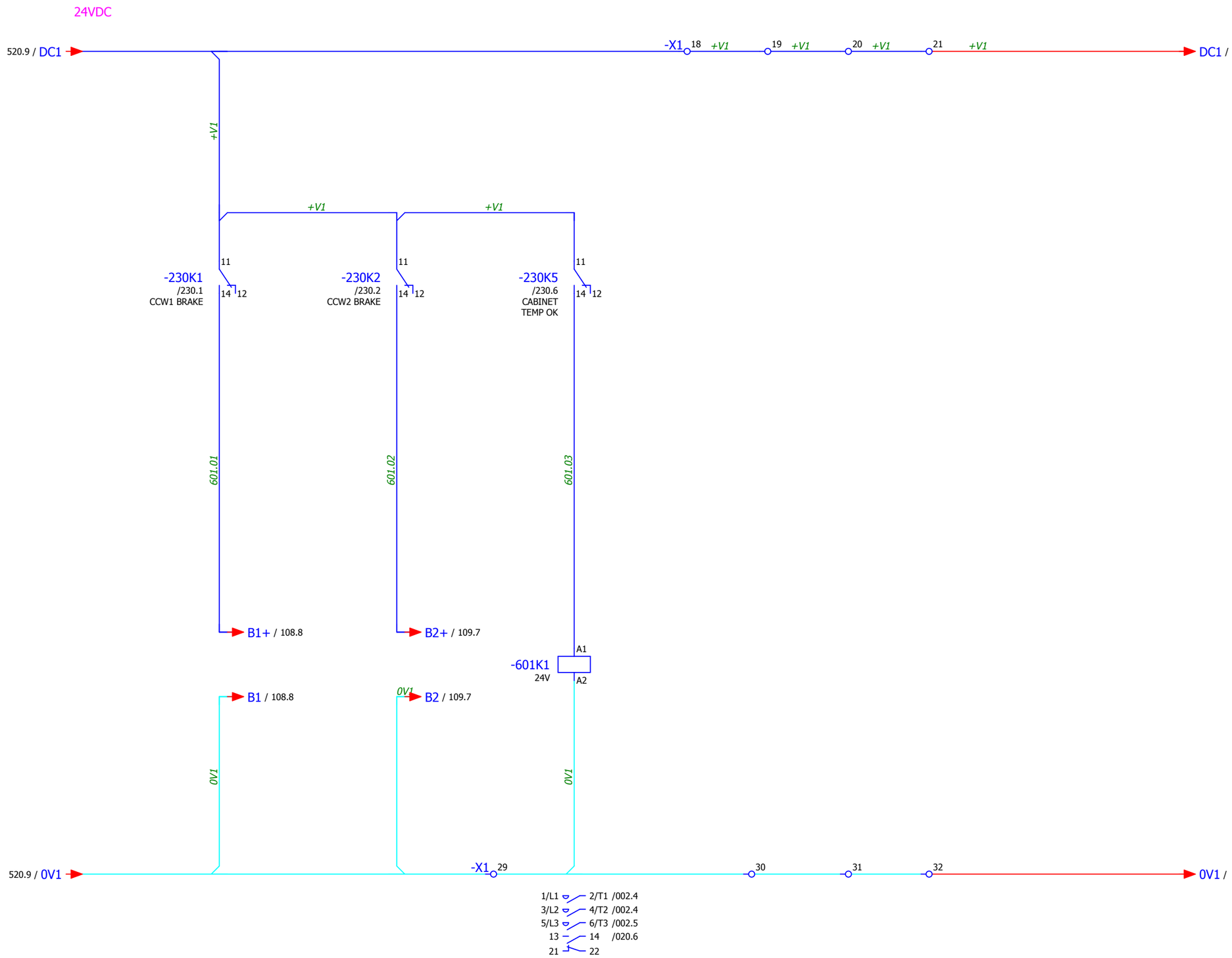

◁ 521

701 ▷

IK4 TEKNIKER Research Alliance	IK4-TEKNIKER AVDA. OTAOLA 20 20600 Eibar (Gipuzkoa) Spain Tfno.:(+34) 943 206744 Fax: (+34) 943 202757 Web: www.tekniker.es								3151_LSST	MCS Design Electrical Schematics LSST TELESCOPE	COMAND	Customer: EMPRESARIOS AGRUPADOS C/Magallanes, 3 28015 MADRID 91 3098000 http://www.empresariosagrupados.es/	= E1 + TMA-CCWAUX-CS-CBT-0101
		Date	28/11/2017										
		Reviewed	F.LÓPEZ	2.3	15/12/2017	JOSE MANUEL							
		Drew by	JOSE MANUEL	Review	Date	Name	Review	Date	Name	Replaces	Replaced by		Page 601 Total number 710

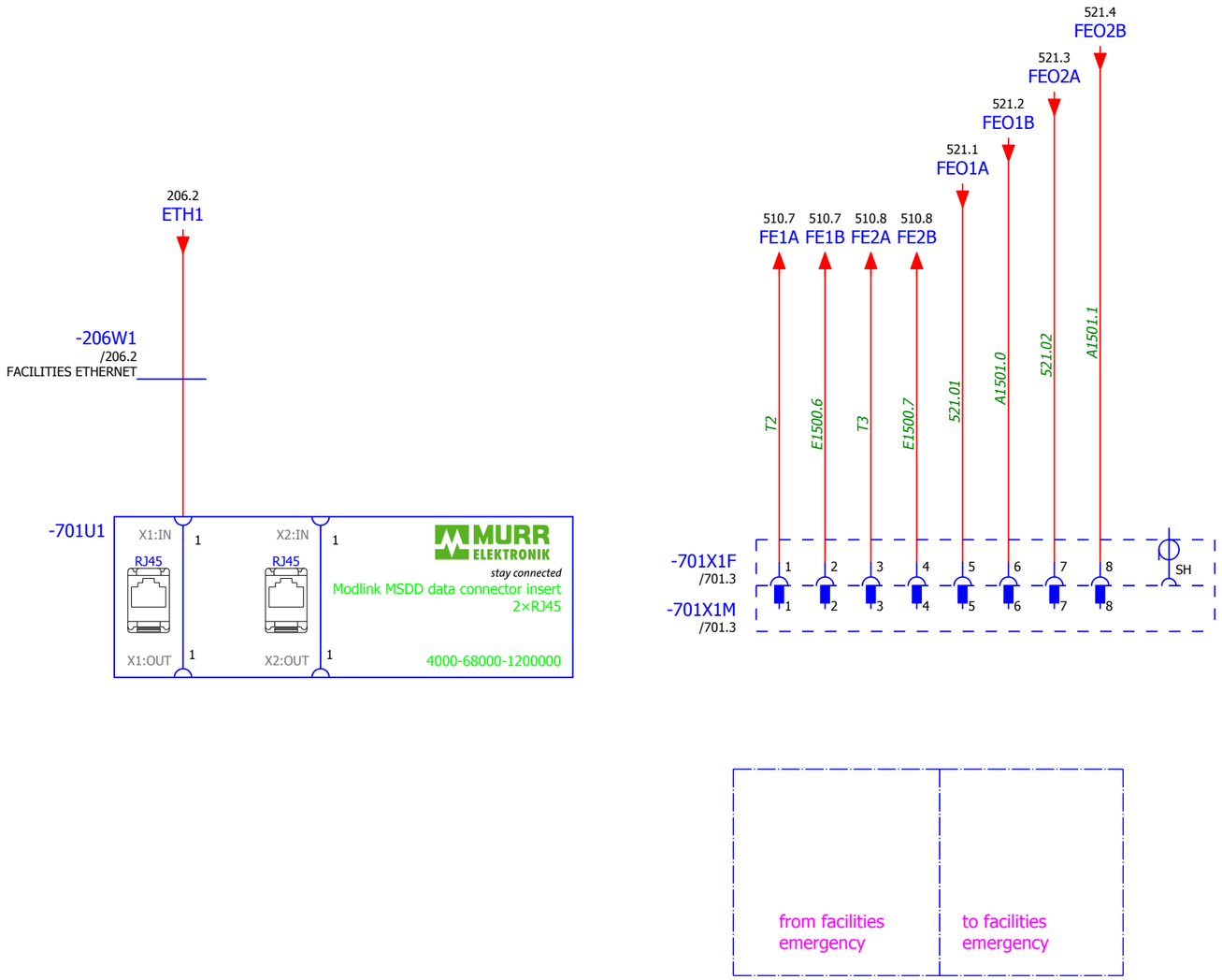

-701X1F = M23 Panel receptacle female pin

-701X1M = M23 Plug male pins

◁ 601

801 ▷

IK4 TEKNIKER Research Alliance
IK4-TEKNIKER
AVDA. OTAOLA 20
20600 Eibar (Gipuzkoa) Spain
Tfno.:(+34) 943 206744
Fax: (+34) 943 202757
Web: www.tekniker.es

Date	23/02/2017						
Reviewed	F.LÓPEZ	2.3	15/12/2017	JOSE MANUEL			
Drew by	jcastano	Review	Date	Name	Review	Date	Name

3151_LSST
MCS Design Electrical Schematics
LSST TELESCOPE
Replaces
Replaced by

FACILITIES INTERFACE

Customer:
EMPRESARIOS AGRUPADOS
C/Magallanes, 3
28015 MADRID
91 3098000
http://www.empresariosagrupados.es/

= E1
+ TMA-CCWAUX-CS-CBT-0101

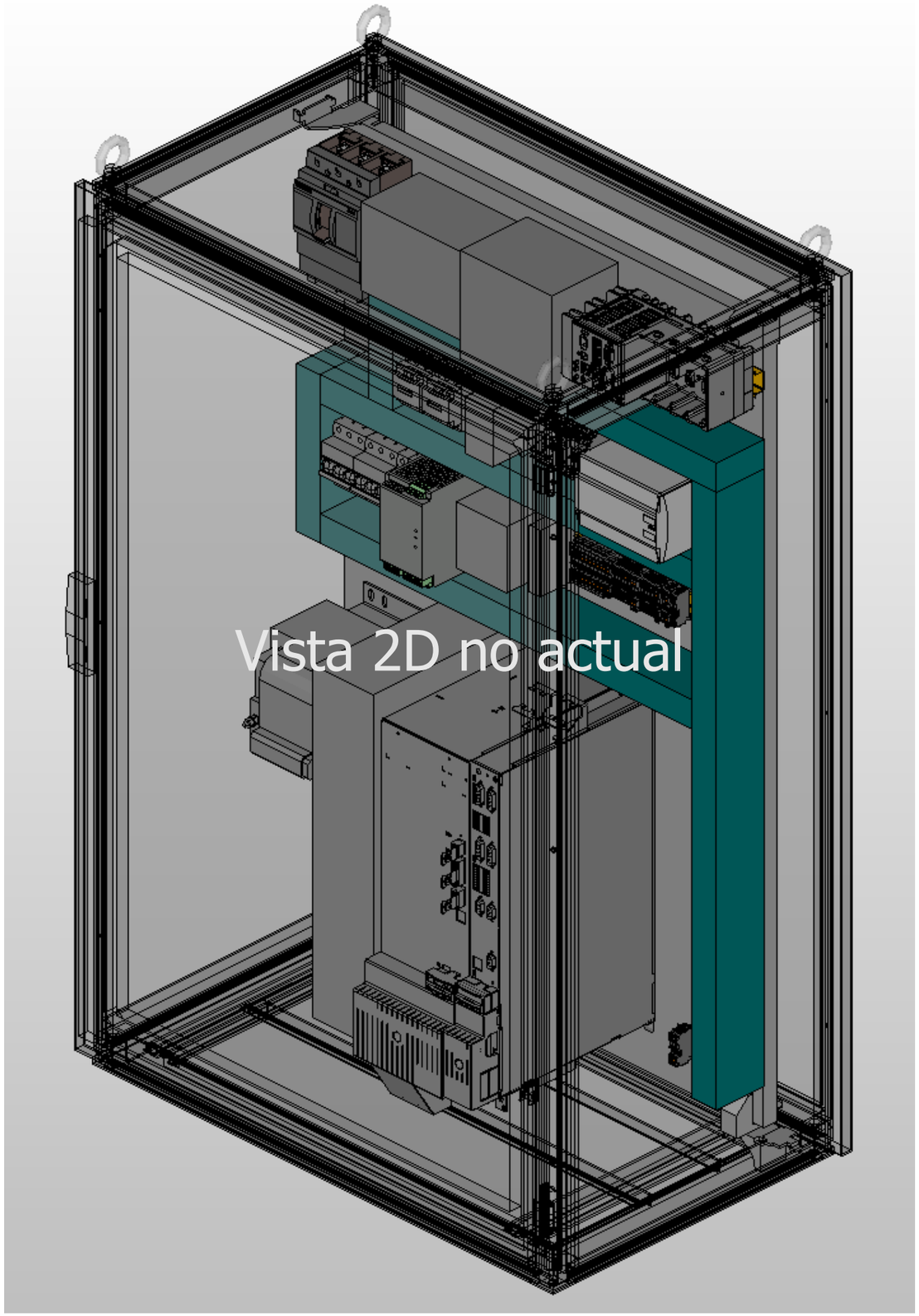

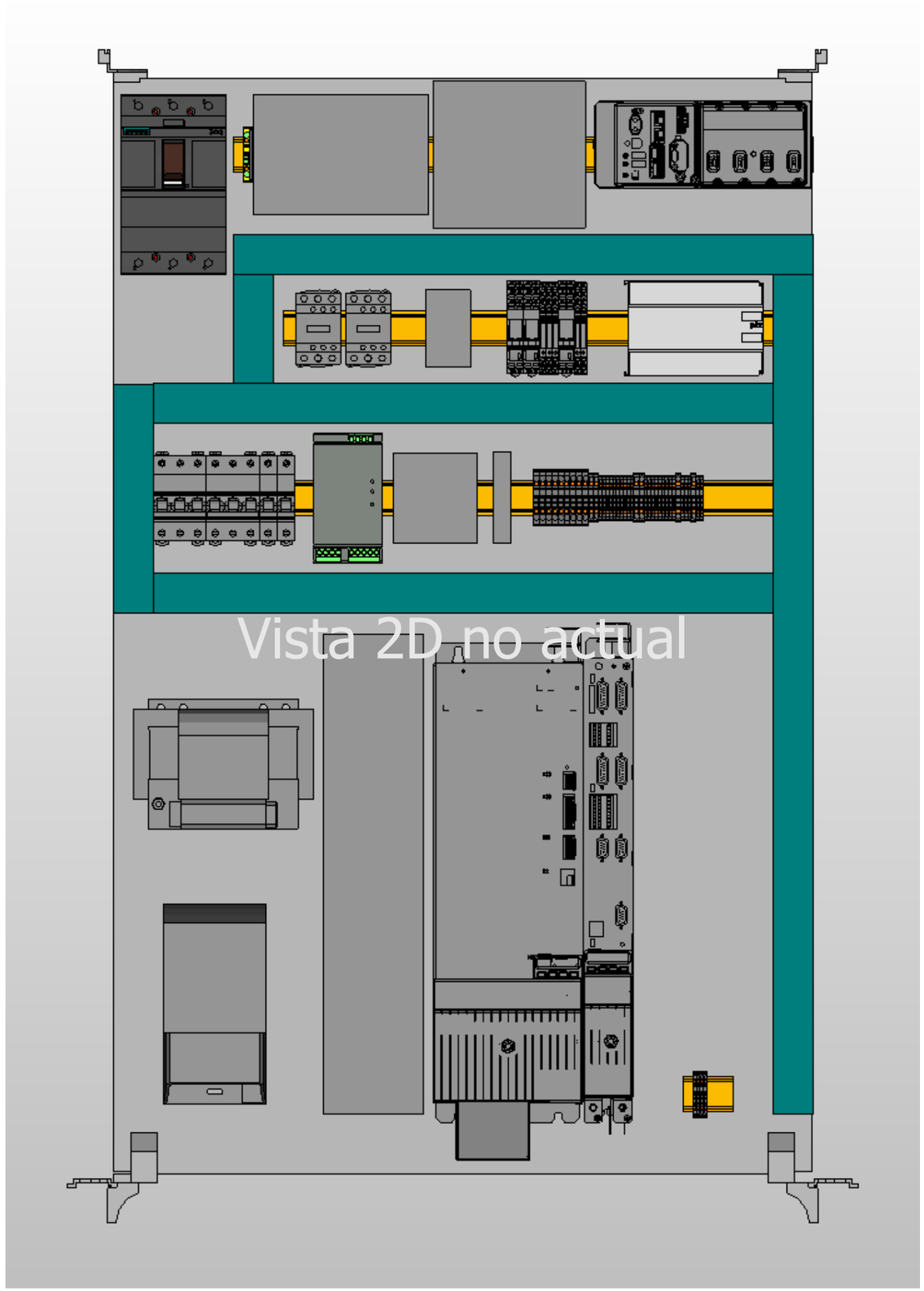

◁ 701

802 ▷

IK4 TEKNIKER Research Alliance
IK4-TEKNIKER
AVDA. OTAOLA 20
20600 Eibar (Gipuzkoa) Spain
Tfno.:(+34) 943 206744
Fax: (+34) 943 202757
Web: www.tekniker.es

Date	23/02/2017							
Reviewed	F.LÓPEZ	2.3	15/12/2017	JOSE MANUEL				
Drew by	jcastano	Review	Date	Name	Review	Date	Name	

3151_LSST

MCS Design Electrical Schematics

LSST TELESCOPE

Replaces | Replaced by

CABINET VIEW

Customer: EMPRESARIOS AGRUPADOS
C/Magallanes, 3
28015 MADRID
91 3098000
http://www.empresariosagrupados.es/

= E1
+ TMA-CCWAUX-CS-CBT-0101

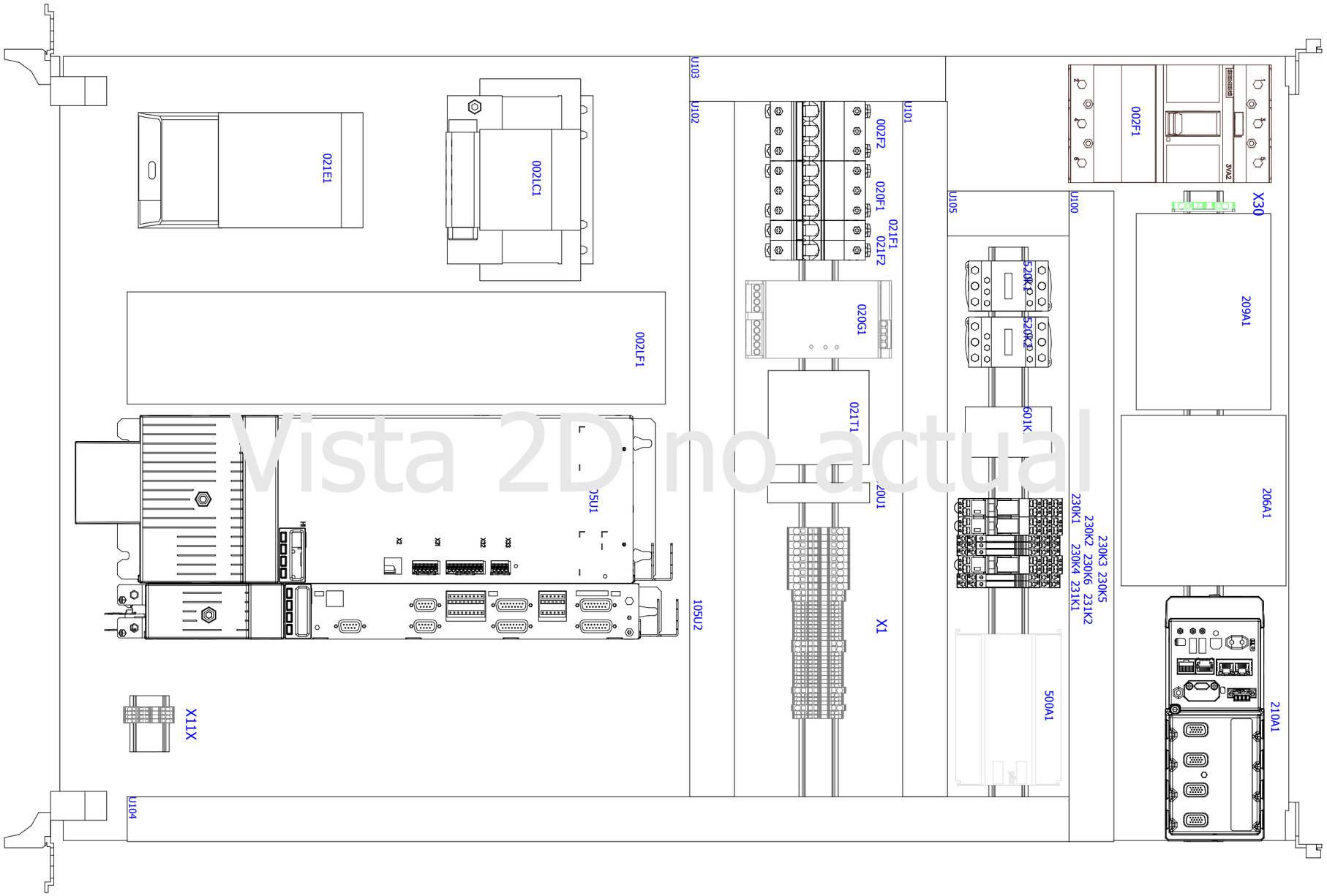

IK4-TEKNIKER
AVDA. OTAOLA 20
20600 Eibar (Gipuzkoa) Spain
Tfno.:(+34) 943 206744
Fax: (+34) 943 202757
Web: www.tekniker.es

Date	23/02/2017						
Reviewed	F.LÓPEZ	2.3	15/12/2017	JOSE MANUEL			
Drew by	jcastano	Review	Date	Name	Review	Date	Name

3151_LSST

MCS Design Electrical Schematics

LSST TELESCOPE

Replaces

Replaced by

MOUNTING PLATE

Customer:

EMPRESARIOS AGRUPADOS

C/Magallanes, 3
28015 MADRID
91 3098000

http://www.empresariosagrupados.es/

= E1

+ TMA-CCWAUX-CS-CBT-0101

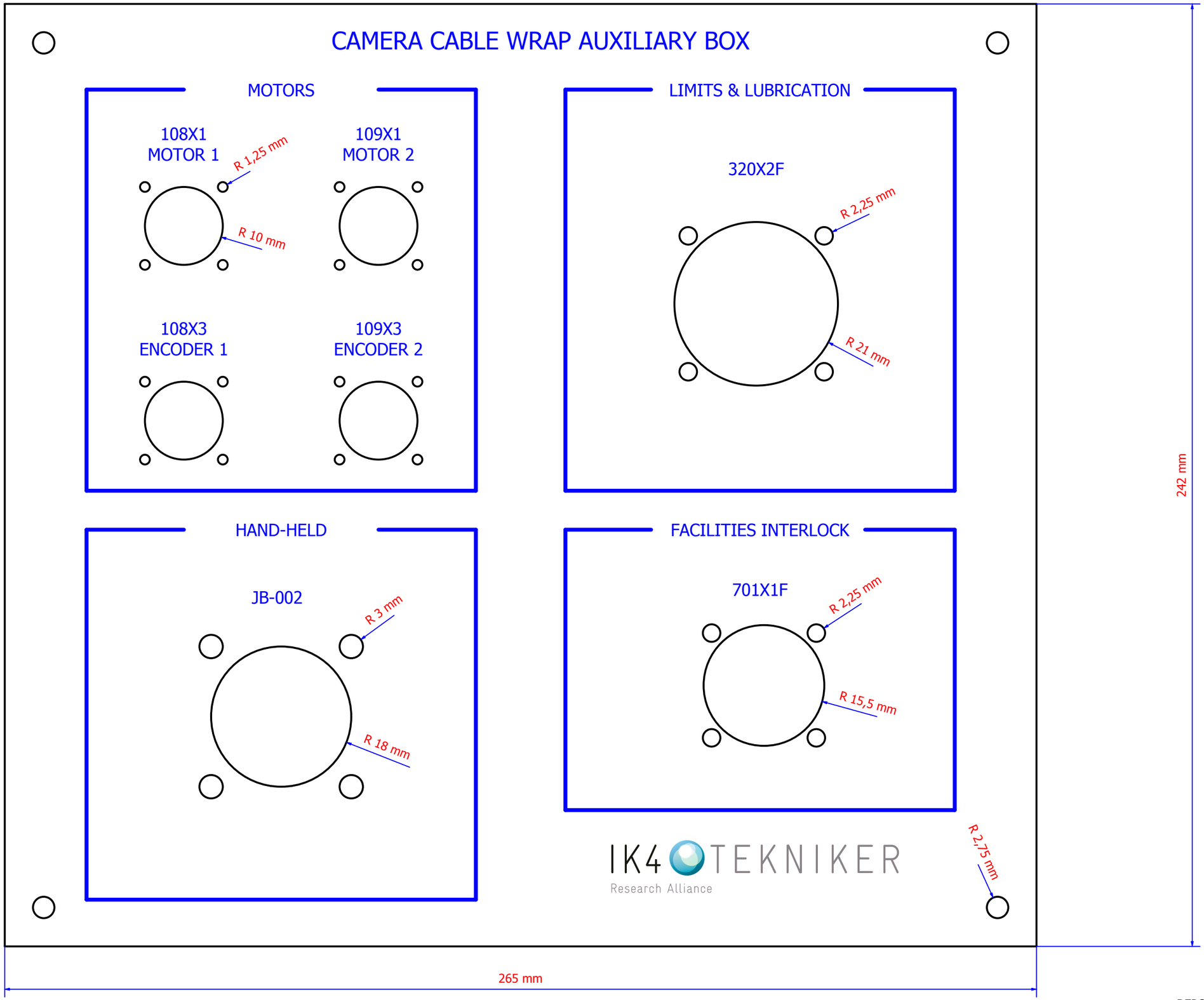

◁ 802

=REPORT+TMA-AZ-CS-CBT-0001/001 ▷

IK4 TEKNIKER Research Alliance	IK4-TEKNIKER AVDA. OTAOLA 20 20600 Eibar (Gipuzkoa) Spain Tfno.:(+34) 943 206744 Fax: (+34) 943 202757 Web: www.tekniker.es									3151_LSST	MCS Design Electrical Schematics LSST TELESCOPE	CONNECTORS PLATE
		Date	27/03/2017									
		Reviewed	F.LÓPEZ	2.3	15/12/2017	JOSE MANUEL						
		Drew by	jcastano	Review	Date	Name	Review	Date	Name	Replaces	Replaced by	

Customer: EMPRESARIOS AGRUPADOS
C/Magallanes, 3
28015 MADRID
91 3098000
http://www.empresariosagrupados.es/

= E1
+ TMA-CCWAUX-CS-CBT-0101

Customer

EMPRESARIOS AGRUPADOS

EMPRESARIOS AGRUPADOS
C/Magallanes, 3
28015 MADRID
ESPAÑA
91 3098000

http://www.empresariosagrupados.es/

Project:

3151_LSST
MCS Design Electrical Schematics
LSST TELESCOPE

REPORT
GENERAL REPORT

TMA-AZ-CS-CBT-0001
MAIN CONTROL CABINET (+X)

Number of pages: 710

Made by:

IK4 TEKNIKER
Research Alliance

IK4-TEKNIKER
AVDA. OTAOLA 20
20600 Eibar (Gipuzkoa) Spain
Tfno. : (+34) 943 206744
Fax : (+34) 943 202757
Web: www.tekniker.es

2.3	VERSION INTERMEDIA PARA MONTAJE ASTURFEITO (SIN EVALUACIONES)	15/12/2017	JOSE MANUEL
Review	Review description	Date	Reviewed

Drew by:	J.M.CASTAÑO
Reviewed:	F.LÓPEZ
Date:	16/12/2015
Replaces:	
Replaced by:	

Parts list

TEKNIKER_v2

DEVICE TAG	PLACEMENT	DESCRIPTION	REFERENCE	MANUFACTURER
=E1-201A1	=E1/201.1	Controller PXI Express Intel Xeon 8-Core, 24 GB/s	PXIe 8880	NATIONAL INSTRUMENTS
=E1-201A3	=E1/201.2	Dual Gigabit Ethernet Interface	PXIe-8234 780263-01	NATIONAL INSTRUMENTS
=E1-201A4	=E1/201.3	Dual Gigabit Ethernet Interface	PXIe-8234 780263-01	NATIONAL INSTRUMENTS
=E1-201A5	=E1/201.3	Dual Gigabit Ethernet Interface	PXIe-8234 780263-01	NATIONAL INSTRUMENTS
=E1-201A6	=E1/201.3	Dual Gigabit Ethernet Interface	PXIe-8234 780263-01	NATIONAL INSTRUMENTS
=E1-206A1	=E1/206.0	SWITCH ETHERNET	IE-3000-8TC	CISCO
=E1-206A2	=E1/206.a.1	SWITCH ETHERNET EXPANSION	IEM-3000-8TMC	CISCO
=E1-209A1	=E1/209.1	IndraControl L45.1 / sercos + Profibus DP + RT-Ethernet	R911170828	BOSCH REXROTH
=E1-210A1	=E1/210.1	8-Slot EtherCAT Slave Chassis for C Series I/O Modules	NI 9144 780438-01	NATIONAL INSTRUMENTS
=E1-210A2	=E1/210.3	5 V/TTL, Bidirectional Digital I/O, 8 Ch Module	NI 9401 779351-01	NATIONAL INSTRUMENTS
=E1-220A1	=E1/220.0	Bus coupler	AXL F BK EC 2688899	PHOENIX CONTACT
=E1-220A10	=E1/220.0	I/O module	2688022	PHOENIX CONTACT
=E1-220A11	=E1/220.1	I/O module	2688022	PHOENIX CONTACT
=E1-220A12	=E1/220.2	I/O module	2688022	PHOENIX CONTACT
=E1-220A20	=E1/220.2	I/O module	2688381	PHOENIX CONTACT
=E1-220A21	=E1/220.3	I/O module	2688381	PHOENIX CONTACT
=E1-220A22	=E1/220.3	I/O module	2688381	PHOENIX CONTACT
=E1-220A30	=E1/220.4	I/O module	2688064	PHOENIX CONTACT
=E1-220A31	=E1/220.4	I/O module	2688064	PHOENIX CONTACT
=E1-220A32	=E1/220.5	I/O module	2688064	PHOENIX CONTACT
=E1-220A33	=E1/220.6	I/O module	2688064	PHOENIX CONTACT
=E1-220A35	=E1/220.6	I/O module	2688080	PHOENIX CONTACT
=E1-220A40	=E1/220.7	I/O module	2688556	PHOENIX CONTACT
=E1-220A41	=E1/220.7	I/O module	2688556	PHOENIX CONTACT
=E1-220A42	=E1/220.8	I/O module	2688556	PHOENIX CONTACT
=E1-220A43	=E1/220.8	I/O module	2688556	PHOENIX CONTACT
=E1-500A1	=E1/500.0	Compact programmable safety system f. decent.	PSSu H PLC1 314 070	PILZ
=E1-500A1	=E1/500.0	TERMINALS	PSSu A Con 2/8 C 313 111	PILZ
=E1-500A10	=E1/500.2	Safety digital input module	PSSu E F 4DI-T 314 200	PILZ
=E1-500A10	=E1/500.2	Base module Cage clamp terminal	PSSu BP 1/8 C-T 314 601	PILZ
=E1-500A11	=E1/500.2	Safety digital input module	PSSu E F 4DI-T 314 200	PILZ
=E1-500A11	=E1/500.2	Base module Cage clamp terminal	PSSu BP 1/8 C-T 314 601	PILZ
=E1-500A12	=E1/500.2	Safety digital input module	PSSu E F 4DI-T 314 200	PILZ
=E1-500A12	=E1/500.2	Base module Cage clamp terminal	PSSu BP 1/8 C-T 314 601	PILZ
=E1-500A13	=E1/500.2	Safety digital input module	PSSu E F 4DI-T 314 200	PILZ
=E1-500A13	=E1/500.2	Base module Cage clamp terminal	PSSu BP 1/8 C-T 314 601	PILZ
=E1-500A14	=E1/500.3	Safety digital input module	PSSu E F 4DI-T 314 200	PILZ
=E1-500A14	=E1/500.3	Base module Cage clamp terminal	PSSu BP 1/8 C-T 314 601	PILZ
=E1-500A15	=E1/500.3	Safety digital input module	PSSu E F 4DI-T 314 200	PILZ

Parts list

TEKNIKER_v2

DEVICE TAG	PLACEMENT	DESCRIPTION	REFERENCE	MANUFACTURER
=E1-500A15	=E1/500.3	Base module Cage clamp terminal	PSSu BP 1/8 C-T 314 601	PILZ
=E1-500A16	=E1/500.3	Safety digital input module	PSSu E F 4DI-T 314 200	PILZ
=E1-500A16	=E1/500.3	Base module Cage clamp terminal	PSSu BP 1/8 C-T 314 601	PILZ
=E1-500A17	=E1/500.3	Safety digital input module	PSSu E F 4DI-T 314 200	PILZ
=E1-500A17	=E1/500.3	Base module Cage clamp terminal	PSSu BP 1/8 C-T 314 601	PILZ
=E1-500A18	=E1/500.3	Safety digital input module	PSSu E F 4DI-T 314 200	PILZ
=E1-500A18	=E1/500.3	Base module Cage clamp terminal	PSSu BP 1/8 C-T 314 601	PILZ
=E1-500A19	=E1/500.4	Safety digital input module	PSSu E F 4DI-T 314 200	PILZ
=E1-500A19	=E1/500.4	Base module Cage clamp terminal	PSSu BP 1/8 C-T 314 601	PILZ
=E1-500A20	=E1/500.4	Safety digital input module	PSSu E F 4DI-T 314 200	PILZ
=E1-500A20	=E1/500.4	Base module Cage clamp terminal	PSSu BP 1/8 C-T 314 601	PILZ
=E1-500A21	=E1/500.4	Safety digital input module	PSSu E F 4DI-T 314 200	PILZ
=E1-500A21	=E1/500.4	Base module Cage clamp terminal	PSSu BP 1/8 C-T 314 601	PILZ
=E1-500A30	=E1/500.5	Fail-safe I/O-Elektronic Module (Coated Version)	314210	PILZ
=E1-500A30	=E1/500.5	Base module Cage clamp terminal	PSSu BP 1/8 C-T 314 601	PILZ
=E1-500A31	=E1/500.5	Fail-safe I/O-Elektronic Module (Coated Version)	314210	PILZ
=E1-500A31	=E1/500.5	Base module Cage clamp terminal	PSSu BP 1/8 C-T 314 601	PILZ
=E1-500A32	=E1/500.5	Fail-safe I/O-Elektronic Module (Coated Version)	314210	PILZ
=E1-500A32	=E1/500.5	Base module Cage clamp terminal	PSSu BP 1/8 C-T 314 601	PILZ
=E1-500A33	=E1/500.5	Fail-safe I/O-Elektronic Module (Coated Version)	314210	PILZ
=E1-500A33	=E1/500.5	Base module Cage clamp terminal	PSSu BP 1/8 C-T 314 601	PILZ
=E1-500A34	=E1/500.5	Fail-safe I/O-Elektronic Module (Coated Version)	314210	PILZ
=E1-500A34	=E1/500.5	Base module Cage clamp terminal	PSSu BP 1/8 C-T 314 601	PILZ
=E1-500A35	=E1/500.6	Fail-safe I/O-Elektronic Module (Coated Version)	314210	PILZ
=E1-500A35	=E1/500.6	Base module Cage clamp terminal	PSSu BP 1/8 C-T 314 601	PILZ
=E1-500A36	=E1/500.6	Fail-safe I/O-Elektronic Module (Coated Version)	314215	PILZ
=E1-500A36	=E1/500.6	Base module Cage clamp terminal	PSSu BP 1/8 C-T 314 601	PILZ
=E1-500A37	=E1/500.6	Fail-safe I/O-Elektronic Module (Coated Version)	314215	PILZ
=E1-500A37	=E1/500.6	Base module Cage clamp terminal	PSSu BP 1/8 C-T 314 601	PILZ
=E1-500A38	=E1/500.7	Fail-safe I/O-Elektronic Module (Coated Version)	314215	PILZ
=E1-500A38	=E1/500.7	Base module Cage clamp terminal	PSSu BP -C 1/8 C-T 314611	PILZ
=E1-500A39	=E1/500.7	Fail-safe I/O-Elektronic Module (Coated Version)	314215	PILZ
=E1-500A39	=E1/500.7	Base module Cage clamp terminal	PSSu BP 1/8 C-T 314 601	PILZ
=E1-500A40	=E1/500.8	Fail-safe I/O-Elektronic Module (Coated Version)	314215	PILZ
=E1-500A40	=E1/500.8	Base module Cage clamp terminal	PSSu BP 1/8 C-T 314 601	PILZ
=E1-500A60	=E1/500.8	Safety count module	PSSu E F INC-T 314 280	PILZ
=E1-500A60	=E1/500.8	Base module Cage clamp terminal	PSSu BP 2/16 C-T 314 629	PILZ
=E1-501A1	=E1/501.3	SWITCH ETHERNET	EDS408-MM-SC-7	MOXA
=E1-128AW2	=E1/128A.4	Sensor/Actuator cable	1405879	PHOENIX CONTACT

Parts list

TEKNIKER_v2

DEVICE TAG	PLACEMENT	DESCRIPTION	REFERENCE	MANUFACTURER
=E1-301B1	=E1/301.0	LINEAR ENCODER	AK-ERA-8980C	HEIDENHAIN
=E1-301B2	=E1/301.5	LINEAR ENCODER	AK-ERA-8980C	HEIDENHAIN
=E1-302B1	=E1/302.0	LINEAR ENCODER	AK-ERA-8980C	HEIDENHAIN
=E1-302B2	=E1/302.5	LINEAR ENCODER	AK-ERA-8980C	HEIDENHAIN
=E1-303B1	=E1/303.0	LINEAR ENCODER	AK-ERA-8980C	HEIDENHAIN
=E1-303B2	=E1/303.5	LINEAR ENCODER	AK-ERA-8980C	HEIDENHAIN
=E1-304B1	=E1/304.0	LINEAR ENCODER	AK-ERA-8980C	HEIDENHAIN
=E1-304B2	=E1/304.5	LINEAR ENCODER	AK-ERA-8980C	HEIDENHAIN
=E1-128BW2	=E1/128B.4	Sensor/Actuator cable	1405879	PHOENIX CONTACT
=E1-128CW2	=E1/128C.4	Sensor/Actuator cable	1405879	PHOENIX CONTACT
=E1-002D1	=E1/002.2	125A 4-POLE DISTRIBUTION TERMINAL BLOCK	0048 86	LEGRAND
=E1-002D1	=E1 (EC1.S17)	125A 4-POLE DISTRIBUTION TERMINAL BLOCK	0048 86	LEGRAND
=E1-002D2	=E1/002.3	125A 4-POLE DISTRIBUTION TERMINAL BLOCK	0048 86	LEGRAND
=E1-002D2	=E1 (EC1.S17)	125A 4-POLE DISTRIBUTION TERMINAL BLOCK	0048 86	LEGRAND
=E1-128DW2	=E1/128D.4	Sensor/Actuator cable	1405879	PHOENIX CONTACT
=E1-101E1	=E1/101.5	RTT Enclosure heater 250 W, 230 V AC	3105380	RITTAL
=E1-030EA1	=E1/030.5	Cabinet light	SZ 4139.150	RITTAL
=E1-030EA2	=E1/030.7	Cabinet light	SZ 4139.150	RITTAL
=E1-002F1	=E1/002.0	Miniature circuit breaker NG125N 63A 3P C	18639	SCHNEIDER ELECTRIC
=E1-002F2	=E1/002.4	Miniature Circuit Breaker C 63A	A9F79363	SCHNEIDER ELECTRIC
=E1-010F1	=E1/010.1	Vigi iC60 - earth leakage add-on block	A9Q11325	SCHNEIDER ELECTRIC
=E1-010F1	=E1/010.1	Miniature Circuit Breaker C 6A	A9F79306	SCHNEIDER ELECTRIC
=E1-010F1	=E1/010.1	Auxiliary Contact	A9A26924	SCHNEIDER ELECTRIC
=E1-010F2	=E1/010.1	Miniature Circuit Breaker D 6A	A9F75306	SCHNEIDER ELECTRIC
=E1-010F2	=E1/010.1	Auxiliary Contact	A9A26924	SCHNEIDER ELECTRIC
=E1-015F1	=E1/015.1	Vigi iC60 - earth leakage add-on block	A9Q11325	SCHNEIDER ELECTRIC
=E1-015F1	=E1/015.1	Miniature Circuit Breaker C 6A	A9F79306	SCHNEIDER ELECTRIC
=E1-015F2	=E1/015.1	Miniature Circuit Breaker D 6A	A9F75306	SCHNEIDER ELECTRIC
=E1-020F1	=E1/020.2	Miniature Circuit Breaker C 10A	A9F79310	SCHNEIDER ELECTRIC
=E1-025F1	=E1/025.1	Miniature Circuit Breaker C 6A	A9F79306	SCHNEIDER ELECTRIC
=E1-025F2	=E1/025.5	Miniature Circuit Breaker C 10A	A9F79310	SCHNEIDER ELECTRIC
=E1-026F1	=E1/026.2	Base element	2800929	PHOENIX CONTACT
=E1-026F1	=E1/026.2	Plug-in bridge	3030255	PHOENIX CONTACT
=E1-026F1	=E1/026.2	Plug-in bridge	3036958	PHOENIX CONTACT
=E1-026F1-F1	=E1 (EC1.S17)	Electronic device circuit breaker	2800905	PHOENIX CONTACT
=E1-026F1-026F1	=E1/026.2	Thermomagnetic device circuit breaker	2800852	PHOENIX CONTACT
=E1-026F2	=E1/026.3	Base element	2800929	PHOENIX CONTACT
=E1-026F2-F2	=E1/026.3	Electronic device circuit breaker	2800907	PHOENIX CONTACT
=E1-026F3	=E1/026.4	Base element	2800929	PHOENIX CONTACT

IK4 TEKNIKER Research Alliance
IK4-TEKNIKER
AVDA. OTAOLA 20
20600 Eibar (Gipuzkoa) Spain
Tfno.:(+34) 943 206744
Fax: (+34) 943 202757
Web: www.tekniker.es

Date	23/02/2017						
Reviewed	F.LÓPEZ	2.3	15/12/2017	JOSE MANUEL			
Drew by	jcastano	Review	Date	Name	Review	Date	Name

3151_LSST

MCS Design Electrical Schematics

LSST TELESCOPE

Replaces

Replaced by

Parts list : HEI.AK-ERA-8980C - PXC.2800929

Customer:

EMPRESARIOS AGRUPADOS

C/Magallanes, 3
28015 MADRID
91 3098000

http://www.empresariosagrupados.es/

= REPORT

+ TMA-AZ-CS-CBT-0001

Parts list

TEKNIKER_v2

DEVICE TAG	PLACEMENT	DESCRIPTION	REFERENCE	MANUFACTURER
=E1-026F3	=E1/026.4	Plug-in bridge	3030255	PHOENIX CONTACT
=E1-026F3	=E1/026.4	Plug-in bridge	3036958	PHOENIX CONTACT
=E1-026F3-026F1	=E1/026.4	Electronic device circuit breaker	2800907	PHOENIX CONTACT
=E1-030F1	=E1/030.4	Miniature Circuit Breaker C 10A	SZ2507.500	RITTAL
=E1-101F1	=E1/101.5	Miniature Circuit Breaker C 4A	A9F74104	SCHNEIDER ELECTRIC
=E1-101F1	=E1/101.5	Auxiliary Contact	A9A26924	SCHNEIDER ELECTRIC
=E1-101F2	=E1/101.7	Miniature Circuit Breaker C 1A	A9F74101	SCHNEIDER ELECTRIC
=E1-101F2	=E1/101.7	Auxiliary Contact	A9A26924	SCHNEIDER ELECTRIC
=E1-101F3	=E1/101.8	Miniature Circuit Breaker C 1A	A9F74101	SCHNEIDER ELECTRIC
=E1-101F3	=E1/101.8	Auxiliary Contact	A9A26924	SCHNEIDER ELECTRIC
=E1-500FA1	=E1/500.4	Power supply	PSSu E F PS1-T 314 191	PILZ
=E1-500FA1	=E1/500.4	Base module Cage clamp terminal	PSSu BS-R 2/8 CT 314 655	PILZ
=E1-500FA2	=E1/500.6	Power supply	PSSu E F PS1-T 314 191	PILZ
=E1-500FA2	=E1/500.6	Base module Cage clamp terminal	PSSu BS-R 2/8 CT 314 655	PILZ
=E1-500FA3	=E1/500.6	Power supply	PSSu E F PS1-T 314 191	PILZ
=E1-500FA3	=E1/500.6	Base module Cage clamp terminal	PSSu BS-R 2/8 CT 314 655	PILZ
=E1-500FA4	=E1/500.7	Power supply	PSSu E F PS1-T 314 191	PILZ
=E1-500FA4	=E1/500.7	Base module Cage clamp terminal	PSSu BS-R 2/8 CT 314 655	PILZ
=E1-020G1	=E1/020.1	Power supply unit	2866802	PHOENIX CONTACT
=E1-025G1	=E1/025.1	Power supply unit	2866734	PHOENIX CONTACT
=E1-025G2	=E1/025.5	Power supply unit	2866802	PHOENIX CONTACT
=E1-111K1	=E1/111.1	RIF-0 Base módule	2900958	PHOENIX CONTACT
=E1-111K1	=E1/111.1	Single relay	2961105	PHOENIX CONTACT
=E1-111K2	=E1/111.4	RIF-0 Base módule	2900958	PHOENIX CONTACT
=E1-111K2	=E1/111.4	Single relay	2961105	PHOENIX CONTACT
=E1-115K1	=E1/115.2	RIF-0 Base módule	2900958	PHOENIX CONTACT
=E1-115K1	=E1/115.2	Single relay	2961105	PHOENIX CONTACT
=E1-115K2	=E1/115.5	RIF-0 Base módule	2900958	PHOENIX CONTACT
=E1-115K2	=E1/115.5	Single relay	2961105	PHOENIX CONTACT
=E1-228K1	=E1/228.1	RIF-0 Base módule	2900958	PHOENIX CONTACT
=E1-228K1	=E1/228.1	Single relay	2961105	PHOENIX CONTACT
=E1-228K2	=E1/228.2	RIF-0 Base módule	2900958	PHOENIX CONTACT
=E1-228K2	=E1/228.2	Single relay	2961105	PHOENIX CONTACT
=E1-228K3	=E1/228.3	RIF-0 Base módule	2900958	PHOENIX CONTACT
=E1-228K3	=E1/228.3	Single relay	2961105	PHOENIX CONTACT
=E1-228K4	=E1/228.4	RIF-0 Base módule	2900958	PHOENIX CONTACT
=E1-228K4	=E1/228.4	Single relay	2961105	PHOENIX CONTACT
=E1-228K5	=E1/228.5	RIF-0 Base módule	2900958	PHOENIX CONTACT
=E1-228K5	=E1/228.5	Single relay	2961105	PHOENIX CONTACT

IK4 TEKNIKER Research Alliance
IK4-TEKNIKER
AVDA. OTAOLA 20
20600 Eibar (Gipuzkoa) Spain
Tfno.:(+34) 943 206744
Fax: (+34) 943 202757
Web: www.tekniker.es

Date	23/02/2017						
Reviewed	F.LÓPEZ	2.3	15/12/2017	JOSE MANUEL			
Drew by	jcastano	Review	Date	Name	Review	Date	Name

3151_LSST

MCS Design Electrical Schematics

LSST TELESCOPE

Replaces | Replaced by

Parts list : PXC.3030255 - PXC.2961105

Customer: EMPRESARIOS AGRUPADOS
C/Magallanes, 3
28015 MADRID
91 3098000
http://www.empresariosagrupados.es/

= REPORT
+ TMA-AZ-CS-CBT-0001

Parts list

TEKNIKER_v2

DEVICE TAG	PLACEMENT	DESCRIPTION	REFERENCE	MANUFACTURER
=E1-228K6	=E1/228.6	RIF-0 Base módule	2900958	PHOENIX CONTACT
=E1-228K6	=E1/228.6	Single relay	2961105	PHOENIX CONTACT
=E1-229K1	=E1/229.1	Zócalo de relé RIF-1	2900931	PHOENIX CONTACT
=E1-229K1	=E1/229.1	Single relay	2961312	PHOENIX CONTACT
=E1-229K1	=E1/229.1	Plug-in module	2900942	PHOENIX CONTACT
=E1-229K2	=E1/229.2	Zócalo de relé RIF-1	2900931	PHOENIX CONTACT
=E1-229K2	=E1/229.2	Single relay	2961312	PHOENIX CONTACT
=E1-229K2	=E1/229.2	Plug-in module	2900942	PHOENIX CONTACT
=E1-229K3	=E1/229.3	Zócalo de relé RIF-1	2900931	PHOENIX CONTACT
=E1-229K3	=E1/229.3	Single relay	2961312	PHOENIX CONTACT
=E1-229K3	=E1/229.3	Plug-in module	2900942	PHOENIX CONTACT
=E1-229K4	=E1/229.4	Zócalo de relé RIF-1	2900931	PHOENIX CONTACT
=E1-229K4	=E1/229.4	Single relay	2961312	PHOENIX CONTACT
=E1-229K4	=E1/229.4	Plug-in module	2900942	PHOENIX CONTACT
=E1-230K1	=E1/230.1	RIF-0 Base módule	2900958	PHOENIX CONTACT
=E1-230K1	=E1/230.1	Single relay	2961105	PHOENIX CONTACT
=E1-230K2	=E1/230.2	RIF-0 Base módule	2900958	PHOENIX CONTACT
=E1-230K2	=E1/230.2	Single relay	2961105	PHOENIX CONTACT
=E1-230K3	=E1/230.3	RIF-0 Base módule	2900958	PHOENIX CONTACT
=E1-230K3	=E1/230.3	Single relay	2961105	PHOENIX CONTACT
=E1-230K4	=E1/230.4	RIF-0 Base módule	2900958	PHOENIX CONTACT
=E1-230K4	=E1/230.4	Single relay	2961105	PHOENIX CONTACT
=E1-230K5	=E1/230.5	RIF-0 Base módule	2900958	PHOENIX CONTACT
=E1-230K5	=E1/230.5	Single relay	2961105	PHOENIX CONTACT
=E1-260K1	=E1/260.9	contactor TeSys LC1-D - 3P - AC-3 440V 65A	LC1D65BD	SCHNEIDER ELECTRIC
=E1-260K2	=E1/260.8	Contactores TeSys	LC1D09BD	SCHNEIDER ELECTRIC
=E1-260K3	=E1/260.4	Zócalo de relé RIF-1	2900931	PHOENIX CONTACT
=E1-260K3	=E1/260.4	Plug-in module	2900942	PHOENIX CONTACT
=E1-260K3	=E1/260.4	Single relay	2961192	PHOENIX CONTACT
=E1-002LC1	=E1/002.4	Choke	R911306580	BOSCH REXROTH
=E1-002LF1	=E1/002.4	Power Line Filter	R911337619	BOSCH REXROTH
=E1-101M1	=E1/101.7	AXIAL FAN	ostro 100236-12	LYTRON
=E1-101M2	=E1/101.8	AXIAL FAN	ostro 100236-12	LYTRON
=E1-PE	=E1/002.6	earth busbar	550220 TCB 20x5	ERICO
=E1-PE	=E1 (EC1.S17)	earth busbar	550220 TCB 20x5	ERICO
=E1-101R1	=E1/101.6	arc suppressor	084-0147-0000	WATLOW
=E1-101R2	=E1/101.8	arc suppressor	084-0147-0000	WATLOW
=E1-030S1	=E1/030.0	Cabinet Door switch	SZ 4127.010	RITTAL
=E1-030S2	=E1/030.0	Cabinet Door switch	SZ 4127.010	RITTAL

IK4 TEKNIKER Research Alliance
IK4-TEKNIKER
AVDA. OTAOLA 20
20600 Eibar (Gipuzkoa) Spain
Tfno.:(+34) 943 206744
Fax: (+34) 943 202757
Web: www.tekniker.es

Date	23/02/2017						
Reviewed	F.LÓPEZ	2.3	15/12/2017	JOSE MANUEL			
Drew by	jcastano	Review	Date	Name	Review	Date	Name

3151_LSST
MCS Design Electrical Schematics
LSST TELESCOPE
Replaces
Replaced by

Parts list : PXC.2900958 - RIT.4127.010

Customer: EMPRESARIOS AGRUPADOS
C/Magallanes, 3
28015 MADRID
91 3098000
http://www.empresariosagrupados.es/

= REPORT
+ TMA-AZ-CS-CBT-0001

Parts list

TEKNIKER_v2

DEVICE TAG		PLACEMENT	DESCRIPTION	REFERENCE	MANUFACTURER
=E1-030S3		=E1/030.0	Cabinet Door switch	SZ 4127.010	RITTAL
=E1-510S1		=E1/510.2	Complete device, round, mushroom pushbutton	XB4-BS8444	SCHNEIDER ELECTRIC
=E1-002SH1	1	=E1/002.8	Connection terminal block	0404017	PHOENIX CONTACT
=E1-002SH1	1	=E1/002.8	Support bracket	0404428	PHOENIX CONTACT
=E1-002SH1	1	=E1/002.8	Support bracket	0404428	PHOENIX CONTACT
=E1-002SH1	1	=E1/002.8	Neutral busbar	0402174	PHOENIX CONTACT
=E1-002SH1	1	=E1 (EC1.S17)	Support bracket	0404428	PHOENIX CONTACT
=E1-002SH1	1	=E1 (EC1.S17)	Support bracket	0404428	PHOENIX CONTACT
=E1-002SH1	1	=E1 (EC1.S17)	Neutral busbar	0402174	PHOENIX CONTACT
=E1-002SH2	1	=E1/002.8	Connection terminal block	0404017	PHOENIX CONTACT
=E1-002SH2	1	=E1/002.8	Support bracket	0404428	PHOENIX CONTACT
=E1-002SH2	1	=E1/002.8	Support bracket	0404428	PHOENIX CONTACT
=E1-002SH2	1	=E1/002.8	Neutral busbar	0402174	PHOENIX CONTACT
=E1-002SH2	1	=E1 (EC1.S17)	Support bracket	0404428	PHOENIX CONTACT
=E1-002SH2	1	=E1 (EC1.S17)	Support bracket	0404428	PHOENIX CONTACT
=E1-002SH2	1	=E1 (EC1.S17)	Neutral busbar	0402174	PHOENIX CONTACT
=E1-002SH3	1	=E1/002.8	Connection terminal block	0404017	PHOENIX CONTACT
=E1-002SH3	1	=E1/002.8	Support bracket	0404428	PHOENIX CONTACT
=E1-002SH3	1	=E1/002.8	Support bracket	0404428	PHOENIX CONTACT
=E1-002SH3	1	=E1/002.8	Neutral busbar	0402174	PHOENIX CONTACT
=E1-002SH3	1	=E1 (EC1.S17)	Support bracket	0404428	PHOENIX CONTACT
=E1-002SH3	1	=E1 (EC1.S17)	Support bracket	0404428	PHOENIX CONTACT
=E1-002SH3	1	=E1 (EC1.S17)	Neutral busbar	0402174	PHOENIX CONTACT
=E1-010T1		=E1/010.1	Three-phase transformer shielded star-star	400/230V 3f 1kva	TRANSFAB
=E1-015T1		=E1/015.1	Three-phase transformer shielded star-star	400/230V 3f 1kva	TRANSFAB
=E1-U1		=E1 (EC1.S17)	Mounting rail EN 50 022 (35x15)	TS 35_15	...
=E1-U2		=E1 (EC1.S17)	Mounting rail EN 50 022 (35x15)	TS 35_15	...
=E1-U3		=E1 (EC1.S17)	Mounting rail EN 50 022 (35x15)	TS 35_15	...
=E1-U4		=E1 (EC1.S17)	Mounting rail EN 50 022 (35x15)	TS 35_15	...
=E1-U5		=E1 (EC1.S17)	Mounting rail EN 50 022 (35x15)	TS 35_15	...
=E1-U6		=E1 (EC1.S17)	Mounting rail EN 50 022 (35x15)	TS 35_15	...
=E1-U7		=E1 (EC1.S17)	Mounting rail EN 50 022 (35x15)	TS 35_15	...
=E1-U50		=E1 (EC1.S17)	NSYSF5G	3x NSYSF5G20680	SCHNEIDER ELECTRIC
=E1-U101		=E1 (EC1.S17)	Unex slotted trunking 80x60 in U23X	80.60.77	UNEX
=E1-U102		=E1 (EC1.S17)	Unex slotted trunking 80x60 in U23X	80.60.77	UNEX
=E1-U103		=E1 (EC1.S17)	Unex slotted trunking 80x80 in U23X	80.80.77	UNEX
=E1-U104		=E1 (EC1.S17)	Unex slotted trunking 80x80 in U23X	80.80.77	UNEX
=E1-U105		=E1 (EC1.S17)	Unex slotted trunking 80x120 in U23X	80.120.77	UNEX
=E1-U106		=E1 (EC1.S17)	Unex slotted trunking 80x60 in U23X	80.60.77	UNEX

Parts list

TEKNIKER_v2

DEVICE TAG	PLACEMENT	DESCRIPTION	REFERENCE	MANUFACTURER
=E1-U107	=E1 (EC1.S17)	Unex slotted trunking 80x60 in U23X	80.60.77	UNEX
=E1-U108	=E1 (EC1.S17)	Unex slotted trunking 80x60 in U23X	80.60.77	UNEX
=E1-U109	=E1 (EC1.S17)	Unex slotted trunking 80x60 in U23X	80.60.77	UNEX
=E1-U110	=E1 (EC1.S17)	Unex slotted trunking 80x80 in U23X	80.80.77	UNEX
=E1-U111	=E1 (EC1.S17)	Unex slotted trunking 80x60 in U23X	80.60.77	UNEX
=E1-U112	=E1 (EC1.S17)	Unex slotted trunking 80x120 in U23X	80.120.77	UNEX
=E1-101U1	=E1/101.6	heat exchanger	M14-240	LYTRON
=E1-105U1	=E1/105.1	IndraDrive Power Supply	R911296724	BOSCH REXROTH
=E1-105U2	=E1/105.2	Capacity module	R911308869	BOSCH REXROTH
=E1-105U3	=E1/105.3	Inverter HMD01.1	R911298766	BOSCH REXROTH
=E1-105U4	=E1/105.4	Inverter HMD01.1	R911306439	BOSCH REXROTH
=E1-105U4-A1	=E1/114.0	CDB control unit	R911338665 CDB02.1B-ET-EC-EC-NN-L3-L3-NN-NN-FW	BOSCH REXROTH
=E1-105U5	=E1/105.5	Electronic control system	R911339232	BOSCH REXROTH
=E1-105U5	=E1/105.5	Control cabinet adapter	HAS03	BOSCH REXROTH
=E1-105U6	=E1/105.5	Electronic control system	R911339232	BOSCH REXROTH
=E1-105U6	=E1/105.5	Control cabinet adapter	HAS03	BOSCH REXROTH
=E1-240U1	=E1/270.0	ENCODER INTERFACE	EIB8000	HEIDENHAIN
=E1-255U1	=E1/255.1	MOBILE OPERATING PANEL	KeTopT200	KEBA
=E1-260U1	=E1/260.0	EZ-ZONE RMC TEMPERATURE CONTROLLER	RMC1RRHRLACA1AA	WATLOW
=E1-261U1	=E1/261.2	EZ-ZONE RMA comunication módule	RMAA-A3AA-AAAA	WATLOW
=E1-030W1	=E1/030.5	Cable for cabinet light	SZ 4315.600	RITTAL
=E1-030W2	=E1/030.5	Cable for cabinet light	SZ 4315.600	RITTAL
=E1-101W1	=E1/101.0	UL/CSA Control Cable JZ-602-CY 3G1 mm² GY	82980	HELUKABEL
=E1-101W2	=E1/101.2	UL/CSA SUPERTRONIC®-330 C-PURö 3x0,34 mm²	49820	HELUKABEL
=E1-106W1	=E1/106.5	150mm BUSBAR	R911306629 HAS01.1-150-NNN-MN	BOSCH REXROTH
=E1-106W2	=E1/106.9	75mm BUSBAR	R911306619 HAS01.1-075-0-71-MN	BOSCH REXROTH
=E1-108W3	=E1/108.2	75mm BUSBAR	R911306619 HAS01.1-075-0-71-MN	BOSCH REXROTH
=E1-108W4	=E1/108.7	REDETH CABLE	BLB.C6PC70S-RD-5	BLACK BOX
=E1-112W3	=E1/112.2	50mm BUSBAR	R911306620 HAS01.1-050-0-72-MN	BOSCH REXROTH
=E1-112W4	=E1/112.7	REDETH CABLE	BLB.C6PC70S-RD-5	BLACK BOX
=E1-119W2	=E1/119.9	50mm BUSBAR	R911306620 HAS01.1-050-0-72-MN	BOSCH REXROTH
=E1-121W2	=E1/121.4	Sensor/Actuator cable	1405879	PHOENIX CONTACT
=E1-124W2	=E1/124.4	Sensor/Actuator cable	1405879	PHOENIX CONTACT
=E1-125W2	=E1/125.4	Sensor/Actuator cable	1405879	PHOENIX CONTACT
=E1-126W2	=E1/126.4	Sensor/Actuator cable	1405879	PHOENIX CONTACT
=E1-205W1	=E1/205.0	WHITE ETH CABLE	BLB.C6PC70S-WH-7	BLACK BOX
=E1-205W2	=E1/205.4	BLUE ETH CABLE	C6PC70S-BL-07	BLACK BOX
=E1-205W3	=E1/205.7	WHITE ETH CABLE	BLB.C6PC70S-WH-7	BLACK BOX
=E1-205W4	=E1/205.8	WHITE ETH CABLE	BLB.C6PC70S-WH-7	BLACK BOX

IK4 TEKNIKER Research Alliance
IK4-TEKNIKER
AVDA. OTAOLA 20
20600 Eibar (Gipuzkoa) Spain
Tfno.:(+34) 943 206744
Fax: (+34) 943 202757
Web: www.tekniker.es

Date	23/02/2017						
Reviewed	F.LÓPEZ	2.3	15/12/2017	JOSE MANUEL			
Drew by	jcastano	Review	Date	Name	Review	Date	Name

3151_LSST

MCS Design Electrical Schematics

LSST TELESCOPE

Replaces | Replaced by

Parts list : UNEX.80.60.77 - BLB.C6PC70S-WH-7

Customer: EMPRESARIOS AGRUPADOS
C/Magallanes, 3
28015 MADRID
91 3098000
http://www.empresariosagrupados.es/

= REPORT
+ TMA-AZ-CS-CBT-0001

Parts list

TEKNIKER_v2

DEVICE TAG	PLACEMENT	DESCRIPTION	REFERENCE	MANUFACTURER
=E1-206W1	=E1/206.3	WHITE ETH CABLE	BLB.C6PC70S-WH-10	BLACK BOX
=E1-206W2	=E1/206.6	WHITE ETH CABLE	BLB.C6PC70S-WH-10	BLACK BOX
=E1-206W3	=E1/206.8	WHITE ETH CABLE	BLB.C6PC70S-WH-7	BLACK BOX
=E1-206W5	=E1/206.a.6	BLUE ETH CABLE	C6PC70S-BL-03	BLACK BOX
=E1-209W1	=E1/209.1	REDETH CABLE	BLB.C6PC70S-RD-7	BLACK BOX
=E1-211W1	=E1/211.5	BLUE ETH CABLE	C6PC70S-BL-07	BLACK BOX
=E1-212W2	=E1/212.0	UL/CSA Cable for Drag Chains SUPER-PAAR-TRONIC 340-C-PUR 1x2x0,34 mm² (22 AWG) GY	49839	HELUKABEL
=E1-212W3	=E1/212.3	UL/CSA Cable for Drag Chains SUPER-PAAR-TRONIC 340-C-PUR 1x2x0,34 mm² (22 AWG) GY	49839	HELUKABEL
=E1-233W1	=E1/233.1	UL/CSA Cable for Drag Chains SUPER-PAAR-TRONIC 340-C-PUR 1x2x0,34 mm² (22 AWG) GY	49839	HELUKABEL
=E1-233W2	=E1/233.2	UL/CSA Cable for Drag Chains SUPER-PAAR-TRONIC 340-C-PUR 1x2x0,34 mm² (22 AWG) GY	49839	HELUKABEL
=E1-233W3	=E1/233.3	UL/CSA Cable for Drag Chains SUPER-PAAR-TRONIC 340-C-PUR 1x2x0,34 mm² (22 AWG) GY	49839	HELUKABEL
=E1-233W4	=E1/233.4	UL/CSA Cable for Drag Chains SUPER-PAAR-TRONIC 340-C-PUR 1x2x0,34 mm² (22 AWG) GY	49839	HELUKABEL
=E1-233W5	=E1/233.5	UL/CSA Cable for Drag Chains SUPER-PAAR-TRONIC 340-C-PUR 1x2x0,34 mm² (22 AWG) GY	49839	HELUKABEL
=E1-233W6	=E1/233.5	UL/CSA Cable for Drag Chains SUPER-PAAR-TRONIC 340-C-PUR 1x2x0,34 mm² (22 AWG) GY	49839	HELUKABEL
=E1-233W8	=E1/233.7	UL/CSA Cable for Drag Chains SUPER-PAAR-TRONIC 340-C-PUR 1x2x0,34 mm² (22 AWG) GY	49839	HELUKABEL
=E1-234W1	=E1/234.1	UL/CSA Cable for Drag Chains SUPER-PAAR-TRONIC 340-C-PUR 1x2x0,34 mm² (22 AWG) GY	49839	HELUKABEL
=E1-234W2	=E1/234.2	UL/CSA Cable for Drag Chains SUPER-PAAR-TRONIC 340-C-PUR 1x2x0,34 mm² (22 AWG) GY	49839	HELUKABEL
=E1-234W3	=E1/234.3	UL/CSA Cable for Drag Chains SUPER-PAAR-TRONIC 340-C-PUR 1x2x0,34 mm² (22 AWG) GY	49839	HELUKABEL
=E1-234W4	=E1/234.4	UL/CSA Cable for Drag Chains SUPER-PAAR-TRONIC 340-C-PUR 1x2x0,34 mm² (22 AWG) GY	49839	HELUKABEL
=E1-234W7	=E1/234.6	UL/CSA Cable for Drag Chains SUPER-PAAR-TRONIC 340-C-PUR 1x2x0,34 mm² (22 AWG) GY	49839	HELUKABEL
=E1-234W8	=E1/234.7	UL/CSA Cable for Drag Chains SUPER-PAAR-TRONIC 340-C-PUR 1x2x0,34 mm² (22 AWG) GY	49839	HELUKABEL
=E1-235W1	=E1/235.1	UL/CSA Cable for Drag Chains SUPER-PAAR-TRONIC 340-C-PUR 1x2x0,34 mm² (22 AWG) GY	49839	HELUKABEL
=E1-235W2	=E1/235.2	UL/CSA Cable for Drag Chains SUPER-PAAR-TRONIC 340-C-PUR 1x2x0,34 mm² (22 AWG) GY	49839	HELUKABEL
=E1-235W8	=E1/235.7	UL/CSA Cable for Drag Chains SUPER-PAAR-TRONIC 340-C-PUR 1x2x0,34 mm² (22 AWG) GY	49839	HELUKABEL
=E1-236W1	=E1/236.2	UL/CSA Cable for Drag Chains SUPER-PAAR-TRONIC 340-C-PUR 1x2x0,34 mm² (22 AWG) GY	49839	HELUKABEL
=E1-236W2	=E1/236.2	UL/CSA Cable for Drag Chains SUPER-PAAR-TRONIC 340-C-PUR 1x2x0,34 mm² (22 AWG) GY	49839	HELUKABEL
=E1-236W3	=E1/236.3	UL/CSA Cable for Drag Chains SUPER-PAAR-TRONIC 340-C-PUR 1x2x0,34 mm² (22 AWG) GY	49839	HELUKABEL
=E1-236W4	=E1/236.4	UL/CSA Cable for Drag Chains SUPER-PAAR-TRONIC 340-C-PUR 1x2x0,34 mm² (22 AWG) GY	49839	HELUKABEL
=E1-236W7	=E1/236.6	UL/CSA Cable for Drag Chains SUPER-PAAR-TRONIC 340-C-PUR 1x2x0,34 mm² (22 AWG) GY	49839	HELUKABEL
=E1-236W8	=E1/236.7	UL/CSA Cable for Drag Chains SUPER-PAAR-TRONIC 340-C-PUR 1x2x0,34 mm² (22 AWG) GY	49839	HELUKABEL
=E1-244W1	=E1/244.2	UL/CSA Cable for Drag Chains SUPER-PAAR-TRONIC 340-C-PUR 1x2x0,34 mm² (22 AWG) GY	49839	HELUKABEL
=E1-244W2	=E1/244.3	UL/CSA Cable for Drag Chains SUPER-PAAR-TRONIC 340-C-PUR 1x2x0,34 mm² (22 AWG) GY	49839	HELUKABEL
=E1-244W3	=E1/244.4	UL/CSA Cable for Drag Chains SUPER-PAAR-TRONIC 340-C-PUR 1x2x0,34 mm² (22 AWG) GY	49839	HELUKABEL
=E1-260W1	=E1/260.2	UL/CSA Cable for Drag Chains SUPER-PAAR-TRONIC 340-C-PUR 1x2x0,34 mm² (22 AWG) GY	49839	HELUKABEL
=E1-501W2	=E1/501.2	YELOW ETH CABLE	BLB.C6PC70S-YE-5	BLACK BOX
=E1-X1 1	=E1/010.5	Feed-through terminal block "Push-in" PT 2,5	3209510	PHOENIX CONTACT
=E1-X1 1	=E1/010.5	5 ST1,5 busbar	3030145	PHOENIX CONTACT
=E1-X1 2	=E1/101.6	Feed-through terminal block "Push-in" PT 2,5	3209510	PHOENIX CONTACT
=E1-X1 3	=E1/202.3	Feed-through terminal block "Push-in" PT 2,5	3209510	PHOENIX CONTACT

IK4 TEKNIKER Research Alliance
IK4-TEKNIKER
AVDA. OTAOLA 20
20600 Eibar (Gipuzkoa) Spain
Tfno.:(+34) 943 206744
Fax: (+34) 943 202757
Web: www.tekniker.es

Date	23/02/2017						
Reviewed	F.LÓPEZ	2.3	15/12/2017	JOSE MANUEL			
Drew by	jcastano	Review	Date	Name	Review	Date	Name

3151_LSST — MCS Design Electrical Schematics
LSST TELESCOPE
Replaces — Replaced by

Parts list : BLB.C6PC70S-WH-10 - PXC.3209510

Customer: EMPRESARIOS AGRUPADOS
C/Magallanes, 3
28015 MADRID
91 3098000
http://www.empresariosagrupados.es/

= REPORT
+ TMA-AZ-CS-CBT-0001

Parts list

TEKNIKER_v2

DEVICE TAG		PLACEMENT	DESCRIPTION	REFERENCE	MANUFACTURER
=E1-X1	4	=E1/202.4	Feed-through terminal block "Push-in" PT 2,5	3209510	PHOENIX CONTACT
=E1-X1	5	=E1/202.4	Feed-through terminal block "Push-in" PT 2,5	3209510	PHOENIX CONTACT
=E1-X1	6	=E1/010.5	Feed-through terminal block "Push-in" PT 2,5	3209510	PHOENIX CONTACT
=E1-X1	6	=E1/010.5	5 ST1,5 busbar	3030145	PHOENIX CONTACT
=E1-X1	7	=E1/101.6	Feed-through terminal block "Push-in" PT 2,5	3209510	PHOENIX CONTACT
=E1-X1	8	=E1/202.3	Feed-through terminal block "Push-in" PT 2,5	3209510	PHOENIX CONTACT
=E1-X1	9	=E1/202.4	Feed-through terminal block "Push-in" PT 2,5	3209510	PHOENIX CONTACT
=E1-X1	10	=E1/202.4	Feed-through terminal block "Push-in" PT 2,5	3209510	PHOENIX CONTACT
=E1-X1	11	=E1/010.5	Feed-through terminal block "Push-in" PT 2,5	3209510	PHOENIX CONTACT
=E1-X1	12	=E1/202.3	Feed-through terminal block "Push-in" PT 2,5	3209510	PHOENIX CONTACT
=E1-X1	13	=E1/202.4	Feed-through terminal block "Push-in" PT 2,5	3209510	PHOENIX CONTACT
=E1-X1	14	=E1/202.4	Feed-through terminal block "Push-in" PT 2,5	3209510	PHOENIX CONTACT
=E1-X1	15	=E1/202.5	Feed-through terminal block "Push-in" PT 2,5	3209510	PHOENIX CONTACT
=E1-X1	16	=E1/020.2	Feed-through terminal block "Push-in" PT 2,5	3209510	PHOENIX CONTACT
=E1-X1	16	=E1/020.2	3 ST2,5 busbar	3030174	PHOENIX CONTACT
=E1-X1	17	=E1/020.2	Feed-through terminal block "Push-in" PT 2,5	3209510	PHOENIX CONTACT
=E1-X1	18	=E1/026.5	Feed-through terminal block "Push-in" PT 2,5	3209510	PHOENIX CONTACT
=E1-X1	19	=E1/020.2	Feed-through terminal block "Push-in" PT 2,5	3209510	PHOENIX CONTACT
=E1-X1	19	=E1/020.2	3 ST2,5 busbar	3030174	PHOENIX CONTACT
=E1-X1	20	=E1/020.2	Feed-through terminal block "Push-in" PT 2,5	3209510	PHOENIX CONTACT
=E1-X1	21	=E1/026.5	Feed-through terminal block "Push-in" PT 2,5	3209510	PHOENIX CONTACT
=E1-X1	22	=E1/026.2	Feed-through terminal block "Push-in" PT 2,5	3209510	PHOENIX CONTACT
=E1-X1	22	=E1/026.2	2,5/4-1,5/S reduction busbar	3214356	PHOENIX CONTACT
=E1-X1	23	=E1/206.1	Feed-through terminal block PT 1,5/S	3208100	PHOENIX CONTACT
=E1-X1	23	=E1/206.1	10 PT1,5 busbar	3213056	PHOENIX CONTACT
=E1-X1	23	=E1/206.1	3 pt-1,5 busbar	3213027	PHOENIX CONTACT
=E1-X1	24	=E1/233.1	Feed-through terminal block PT 1,5/S	3208100	PHOENIX CONTACT
=E1-X1	25	=E1/244.7	Feed-through terminal block PT 1,5/S	3208100	PHOENIX CONTACT
=E1-X1	26	=E1/255.6	Feed-through terminal block PT 1,5/S	3208100	PHOENIX CONTACT
=E1-X1	27	=E1/260.8	Feed-through terminal block PT 1,5/S	3208100	PHOENIX CONTACT
=E1-X1	28	=E1/261.3	Feed-through terminal block PT 1,5/S	3208100	PHOENIX CONTACT
=E1-X1	29	=E1/335.3	Feed-through terminal block PT 1,5/S	3208100	PHOENIX CONTACT
=E1-X1	30	=E1/502.1	Feed-through terminal block PT 1,5/S	3208100	PHOENIX CONTACT
=E1-X1	31	=E1/502.5	Feed-through terminal block PT 1,5/S	3208100	PHOENIX CONTACT
=E1-X1	32	=E1/502.8	Feed-through terminal block PT 1,5/S	3208100	PHOENIX CONTACT
=E1-X1	32	=E1/502.8	3 pt-1,5 busbar	3213027	PHOENIX CONTACT
=E1-X1	33	=E1/502.9	Feed-through terminal block PT 1,5/S	3208100	PHOENIX CONTACT
=E1-X1	34	=E1/502.9	Feed-through terminal block PT 1,5/S	3208100	PHOENIX CONTACT
=E1-X1	35	=E1/026.2	Feed-through terminal block "Push-in" PT 2,5	3209510	PHOENIX CONTACT

IK4 TEKNIKER Research Alliance

IK4-TEKNIKER
AVDA. OTAOLA 20
20600 Eibar (Gipuzkoa) Spain
Tfno.:(+34) 943 206744
Fax: (+34) 943 202757
Web: www.tekniker.es

Date	23/02/2017						
Reviewed	F.LÓPEZ	2.3	15/12/2017	JOSE MANUEL			
Drew by	jcastano	Review	Date	Name	Review	Date	Name

3151_LSST

MCS Design Electrical Schematics

LSST TELESCOPE

Replaces | Replaced by

Parts list : PXC.3209510 - PXC.3209510

Customer: EMPRESARIOS AGRUPADOS
C/Magallanes, 3
28015 MADRID
91 3098000
http://www.empresariosagrupados.es/

= REPORT
+ TMA-AZ-CS-CBT-0001

Parts list

TEKNIKER_v2

DEVICE TAG		PLACEMENT	DESCRIPTION	REFERENCE	MANUFACTURER
=E1-X1	35	=E1/026.2	2,5/4-1,5/S reduction busbar	3214356	PHOENIX CONTACT
=E1-X1	36	=E1/206.1	Feed-through terminal block PT 1,5/S	3208100	PHOENIX CONTACT
=E1-X1	36	=E1/206.1	10 PT1,5 busbar	3213056	PHOENIX CONTACT
=E1-X1	36	=E1/206.1	3 pt-1,5 busbar	3213027	PHOENIX CONTACT
=E1-X1	37	=E1/238.0	Feed-through terminal block PT 1,5/S	3208100	PHOENIX CONTACT
=E1-X1	38	=E1/244.7	Feed-through terminal block PT 1,5/S	3208100	PHOENIX CONTACT
=E1-X1	39	=E1/255.6	Feed-through terminal block PT 1,5/S	3208100	PHOENIX CONTACT
=E1-X1	40	=E1/261.2	Feed-through terminal block PT 1,5/S	3208100	PHOENIX CONTACT
=E1-X1	41	=E1/330.5	Feed-through terminal block PT 1,5/S	3208100	PHOENIX CONTACT
=E1-X1	42	=E1/502.1	Feed-through terminal block PT 1,5/S	3208100	PHOENIX CONTACT
=E1-X1	43	=E1/502.2	Feed-through terminal block PT 1,5/S	3208100	PHOENIX CONTACT
=E1-X1	44	=E1/502.7	Feed-through terminal block PT 1,5/S	3208100	PHOENIX CONTACT
=E1-X1	45	=E1/502.8	Feed-through terminal block PT 1,5/S	3208100	PHOENIX CONTACT
=E1-X1	45	=E1/502.8	3 pt-1,5 busbar	3213027	PHOENIX CONTACT
=E1-X1	46	=E1/502.9	Feed-through terminal block PT 1,5/S	3208100	PHOENIX CONTACT
=E1-X1	47	=E1/502.9	Feed-through terminal block PT 1,5/S	3208100	PHOENIX CONTACT
=E1-X1	48	=E1/026.3	Feed-through terminal block "Push-in" PT 2,5	3209510	PHOENIX CONTACT
=E1-X1	48	=E1/026.3	2,5/4-1,5/S reduction busbar	3214356	PHOENIX CONTACT
=E1-X1	49	=E1/222.1	Feed-through terminal block PT 1,5/S	3208100	PHOENIX CONTACT
=E1-X1	49	=E1/222.1	5 PT1,5 busbar	3213043	PHOENIX CONTACT
=E1-X1	50	=E1/502.2	Feed-through terminal block PT 1,5/S	3208100	PHOENIX CONTACT
=E1-X1	51	=E1/502.7	Feed-through terminal block PT 1,5/S	3208100	PHOENIX CONTACT
=E1-X1	52	=E1/502.8	Feed-through terminal block PT 1,5/S	3208100	PHOENIX CONTACT
=E1-X1	53	=E1/502.8	Feed-through terminal block PT 1,5/S	3208100	PHOENIX CONTACT
=E1-X1	54	=E1/026.3	Feed-through terminal block "Push-in" PT 2,5	3209510	PHOENIX CONTACT
=E1-X1	54	=E1/026.3	2,5/4-1,5/S reduction busbar	3214356	PHOENIX CONTACT
=E1-X1	55	=E1/222.0	Feed-through terminal block PT 1,5/S	3208100	PHOENIX CONTACT
=E1-X1	55	=E1/222.0	5 PT1,5 busbar	3213043	PHOENIX CONTACT
=E1-X1	56	=E1/353.5	Feed-through terminal block PT 1,5/S	3208100	PHOENIX CONTACT
=E1-X1	57	=E1/502.4	Feed-through terminal block PT 1,5/S	3208100	PHOENIX CONTACT
=E1-X1	58	=E1/502.8	Feed-through terminal block PT 1,5/S	3208100	PHOENIX CONTACT
=E1-X1	59	=E1/502.8	Feed-through terminal block PT 1,5/S	3208100	PHOENIX CONTACT
=E1-X1	60	=E1/026.4	Feed-through terminal block "Push-in" PT 2,5	3209510	PHOENIX CONTACT
=E1-X1	60	=E1/026.4	2,5/4-1,5/S reduction busbar	3214356	PHOENIX CONTACT
=E1-X1	61	=E1/101.1	Feed-through terminal block PT 1,5/S	3208100	PHOENIX CONTACT
=E1-X1	61	=E1/101.1	4 PT 1,5 busbar	FBS 4-3,5 3213030	PHOENIX CONTACT
=E1-X1	62	=E1/630.7	Feed-through terminal block PT 1,5/S	3208100	PHOENIX CONTACT
=E1-X1	63	=E1/631.6	Feed-through terminal block PT 1,5/S	3208100	PHOENIX CONTACT
=E1-X1	64	=E1/631.7	Feed-through terminal block PT 1,5/S	3208100	PHOENIX CONTACT

IK4 TEKNIKER Research Alliance
IK4-TEKNIKER
AVDA. OTAOLA 20
20600 Eibar (Gipuzkoa) Spain
Tfno.:(+34) 943 206744
Fax: (+34) 943 202757
Web: www.tekniker.es

Date	23/02/2017						
Reviewed	F.LÓPEZ	2.3	15/12/2017	JOSE MANUEL			
Drew by	jcastano	Review	Date	Name	Review	Date	Name

3151_LSST
MCS Design Electrical Schematics
LSST TELESCOPE
Replaces
Replaced by

Parts list : PXC.3214356 - PXC.3208100

Customer: EMPRESARIOS AGRUPADOS
C/Magallanes, 3
28015 MADRID
91 3098000
http://www.empresariosagrupados.es/

= REPORT
+ TMA-AZ-CS-CBT-0001

Parts list

TEKNIKER_v2

DEVICE TAG		PLACEMENT	DESCRIPTION	REFERENCE	MANUFACTURER
=E1-X1	65	=E1/026.4	Feed-through terminal block "Push-in" PT 2,5	3209510	PHOENIX CONTACT
=E1-X1	65	=E1/026.4	2,5/4-1,5/S reduction busbar	3214356	PHOENIX CONTACT
=E1-X1	66	=E1/101.1	Feed-through terminal block PT 1,5/S	3208100	PHOENIX CONTACT
=E1-X1	66	=E1/101.1	4 PT 1,5 busbar	FBS 4-3,5 3213030	PHOENIX CONTACT
=E1-X1	67	=E1/630.3	Feed-through terminal block PT 1,5/S	3208100	PHOENIX CONTACT
=E1-X1	68	=E1/631.6	Feed-through terminal block PT 1,5/S	3208100	PHOENIX CONTACT
=E1-X1	69	=E1/631.7	Feed-through terminal block PT 1,5/S	3208100	PHOENIX CONTACT
=E1-X2	1	=E1/015.5	Feed-through terminal block "Push-in" PT 2,5	3209510	PHOENIX CONTACT
=E1-X2	1	=E1/015.5	No traducido!!!!	3030187	PHOENIX CONTACT
=E1-X2	2	=E1/271.2	Feed-through terminal block "Push-in" PT 2,5	3209510	PHOENIX CONTACT
=E1-X2	3	=E1/271.2	Feed-through terminal block "Push-in" PT 2,5	3209510	PHOENIX CONTACT
=E1-X2	4	=E1/271.3	Feed-through terminal block "Push-in" PT 2,5	3209510	PHOENIX CONTACT
=E1-X2	5	=E1/015.5	Feed-through terminal block "Push-in" PT 2,5	3209510	PHOENIX CONTACT
=E1-X2	5	=E1/015.5	No traducido!!!!	3030187	PHOENIX CONTACT
=E1-X2	6	=E1/271.2	Feed-through terminal block "Push-in" PT 2,5	3209510	PHOENIX CONTACT
=E1-X2	7	=E1/271.2	Feed-through terminal block "Push-in" PT 2,5	3209510	PHOENIX CONTACT
=E1-X2	8	=E1/271.3	Feed-through terminal block "Push-in" PT 2,5	3209510	PHOENIX CONTACT
=E1-X2	9	=E1/015.5	Feed-through terminal block "Push-in" PT 2,5	3209510	PHOENIX CONTACT
=E1-X2	9	=E1/015.5	No traducido!!!!	3030187	PHOENIX CONTACT
=E1-X2	10	=E1/271.2	Feed-through terminal block "Push-in" PT 2,5	3209510	PHOENIX CONTACT
=E1-X2	11	=E1/271.2	Feed-through terminal block "Push-in" PT 2,5	3209510	PHOENIX CONTACT
=E1-X2	12	=E1/271.3	Feed-through terminal block "Push-in" PT 2,5	3209510	PHOENIX CONTACT
=E1-X2	13	=E1/025.1	Feed-through terminal block PT 1,5/S	3208100	PHOENIX CONTACT
=E1-X2	13	=E1/025.1	4 PT 1,5 busbar	FBS 4-3,5 3213030	PHOENIX CONTACT
=E1-X2	14	=E1/211.2	Feed-through terminal block PT 1,5/S	3208100	PHOENIX CONTACT
=E1-X2	15	=E1/501.5	Feed-through terminal block PT 1,5/S	3208100	PHOENIX CONTACT
=E1-X2	16	=E1/501.5	Feed-through terminal block PT 1,5/S	3208100	PHOENIX CONTACT
=E1-X2	17	=E1/025.2	Feed-through terminal block PT 1,5/S	3208100	PHOENIX CONTACT
=E1-X2	17	=E1/025.2	4 PT 1,5 busbar	FBS 4-3,5 3213030	PHOENIX CONTACT
=E1-X2	18	=E1/211.2	Feed-through terminal block PT 1,5/S	3208100	PHOENIX CONTACT
=E1-X2	19	=E1/501.5	Feed-through terminal block PT 1,5/S	3208100	PHOENIX CONTACT
=E1-X2	20	=E1/501.5	Feed-through terminal block PT 1,5/S	3208100	PHOENIX CONTACT
=E1-X2	21	=E1/025.5	Feed-through terminal block	3211813	PHOENIX CONTACT
=E1-X2	21	=E1/025.5	6-2,5 reduction busbar	3030860	PHOENIX CONTACT
=E1-X2	22	=E1/025.5	Feed-through terminal block "Push-in" PT 2,5	3209510	PHOENIX CONTACT
=E1-X2	22	=E1/025.5	2,5/4-1,5/S reduction busbar	3214356	PHOENIX CONTACT
=E1-X2	23	=E1/025.5	Feed-through terminal block PT 1,5/S	3208100	PHOENIX CONTACT
=E1-X2	23	=E1/025.5	4 PT 1,5 busbar	FBS 4-3,5 3213030	PHOENIX CONTACT
=E1-X2	24	=E1/107.6	Feed-through terminal block PT 1,5/S	3208100	PHOENIX CONTACT

IK4 TEKNIKER Research Alliance

IK4-TEKNIKER
AVDA. OTAOLA 20
20600 Eibar (Gipuzkoa) Spain
Tfno.:(+34) 943 206744
Fax: (+34) 943 202757
Web: www.tekniker.es

Date	23/02/2017						
Reviewed	F.LÓPEZ	2.3	15/12/2017	JOSE MANUEL			
Drew by	jcastano	Review	Date	Name	Review	Date	Name

3151_LSST

MCS Design Electrical Schematics

LSST TELESCOPE

Replaces | Replaced by

Parts list : PXC.3209510 - PXC.3208100

Customer: EMPRESARIOS AGRUPADOS
C/Magallanes, 3
28015 MADRID
91 3098000
http://www.empresariosagrupados.es/

= REPORT
+ TMA-AZ-CS-CBT-0001

Parts list

TEKNIKER_v2

DEVICE TAG		PLACEMENT	DESCRIPTION	REFERENCE	MANUFACTURER
=E1-X2	25	=E1/110.5	Feed-through terminal block PT 1,5/S	3208100	PHOENIX CONTACT
=E1-X2	26	=E1/601.6	Feed-through terminal block PT 1,5/S	3208100	PHOENIX CONTACT
=E1-X2	27	=E1/025.6	Feed-through terminal block	3211813	PHOENIX CONTACT
=E1-X2	27	=E1/025.6	6-2,5 reduction busbar	3030860	PHOENIX CONTACT
=E1-X2	28	=E1/025.6	Feed-through terminal block "Push-in" PT 2,5	3209510	PHOENIX CONTACT
=E1-X2	28	=E1/025.6	2,5/4-1,5/S reduction busbar	3214356	PHOENIX CONTACT
=E1-X2	29	=E1/025.6	Feed-through terminal block PT 1,5/S	3208100	PHOENIX CONTACT
=E1-X2	29	=E1/025.6	4 PT 1,5 busbar	FBS 4-3,5 3213030	PHOENIX CONTACT
=E1-X2	30	=E1/110.5	Feed-through terminal block PT 1,5/S	3208100	PHOENIX CONTACT
=E1-X2	31	=E1/601.3	Feed-through terminal block PT 1,5/S	3208100	PHOENIX CONTACT
=E1-X2	32	=E1/601.6	Feed-through terminal block PT 1,5/S	3208100	PHOENIX CONTACT
=E1-X10	1	=E1/101.1	Feed-through terminal block PT 1,5/S	3208100	PHOENIX CONTACT
=E1-X10	2	=E1/101.1	Feed-through terminal block PT 1,5/S	3208100	PHOENIX CONTACT
=E1-X10	3	=E1/101.2	Feed-through terminal block PT 1,5/S	3208100	PHOENIX CONTACT
=E1-X10	4	=E1/101.2	Feed-through terminal block PT 1,5/S	3208100	PHOENIX CONTACT
=E1-X10	5	=E1/101.2	Feed-through terminal block PT 1,5/S	3208100	PHOENIX CONTACT
=E1-X10	6	=E1/101.3	Feed-through terminal block PT 1,5/S	3208100	PHOENIX CONTACT
=E1-X10	7	=E1/630.0	Feed-through terminal block PT 1,5/S	3208100	PHOENIX CONTACT
=E1-X10	8	=E1/630.1	Feed-through terminal block PT 1,5/S	3208100	PHOENIX CONTACT
=E1-X10	9	=E1/630.1	Feed-through terminal block PT 1,5/S	3208100	PHOENIX CONTACT
=E1-X10	10	=E1/630.2	Feed-through terminal block PT 1,5/S	3208100	PHOENIX CONTACT
=E1-X10	11	=E1/630.2	Feed-through terminal block PT 1,5/S	3208100	PHOENIX CONTACT
=E1-X10	12	=E1/630.3	Feed-through terminal block PT 1,5/S	3208100	PHOENIX CONTACT
=E1-X10	13	=E1/630.3	Feed-through terminal block PT 1,5/S	3208100	PHOENIX CONTACT
=E1-X10	14	=E1/630.5	Feed-through terminal block PT 1,5/S	3208100	PHOENIX CONTACT
=E1-X10	15	=E1/630.5	Feed-through terminal block PT 1,5/S	3208100	PHOENIX CONTACT
=E1-X10	16	=E1/630.5	Feed-through terminal block PT 1,5/S	3208100	PHOENIX CONTACT
=E1-X10	17	=E1/630.6	Feed-through terminal block PT 1,5/S	3208100	PHOENIX CONTACT
=E1-X10	18	=E1/630.7	Feed-through terminal block PT 1,5/S	3208100	PHOENIX CONTACT
=E1-X10	19	=E1/630.7	Feed-through terminal block PT 1,5/S	3208100	PHOENIX CONTACT
=E1-X10	20	=E1/630.7	Feed-through terminal block PT 1,5/S	3208100	PHOENIX CONTACT
=E1-X10	21	=E1/631.2	Feed-through terminal block PT 1,5/S	3208100	PHOENIX CONTACT
=E1-X10	22	=E1/631.2	Feed-through terminal block PT 1,5/S	3208100	PHOENIX CONTACT
=E1-X10	23	=E1/631.3	Feed-through terminal block PT 1,5/S	3208100	PHOENIX CONTACT
=E1-X10	24	=E1/631.4	Feed-through terminal block PT 1,5/S	3208100	PHOENIX CONTACT
=E1-X10	25	=E1/631.4	Feed-through terminal block PT 1,5/S	3208100	PHOENIX CONTACT
=E1-X10	26	=E1/631.4	Feed-through terminal block PT 1,5/S	3208100	PHOENIX CONTACT
=E1-X10	27	=E1/631.5	Feed-through terminal block PT 1,5/S	3208100	PHOENIX CONTACT
=E1-X10	28	=E1/255.0	Feed-through terminal block PT 1,5/S	3208100	PHOENIX CONTACT

IK4 TEKNIKER Research Alliance
IK4-TEKNIKER
AVDA. OTAOLA 20
20600 Eibar (Gipuzkoa) Spain
Tfno.:(+34) 943 206744
Fax: (+34) 943 202757
Web: www.tekniker.es

Date	23/02/2017						
Reviewed	F.LÓPEZ	2.3	15/12/2017	JOSE MANUEL			
Drew by	jcastano	Review	Date	Name	Review	Date	Name

3151_LSST
MCS Design Electrical Schematics
LSST TELESCOPE
Replaces
Replaced by

Parts list : PXC.3208100 - PXC.3208100

Customer: EMPRESARIOS AGRUPADOS
C/Magallanes, 3
28015 MADRID
91 3098000
http://www.empresariosagrupados.es/

= REPORT
+ TMA-AZ-CS-CBT-0001

Parts list

TEKNIKER_v2

DEVICE TAG		PLACEMENT	DESCRIPTION	REFERENCE	MANUFACTURER
=E1-X10	29	=E1/255.0	Feed-through terminal block PT 1,5/S	3208100	PHOENIX CONTACT
=E1-X10	30	=E1/255.1	Feed-through terminal block PT 1,5/S	3208100	PHOENIX CONTACT
=E1-X10	31	=E1/255.1	Feed-through terminal block PT 1,5/S	3208100	PHOENIX CONTACT
=E1-X10	32	=E1/255.1	Feed-through terminal block PT 1,5/S	3208100	PHOENIX CONTACT
=E1-X10	33	=E1/255.1	Feed-through terminal block PT 1,5/S	3208100	PHOENIX CONTACT
=E1-X10	34	=E1/255.1	Feed-through terminal block PT 1,5/S	3208100	PHOENIX CONTACT
=E1-X10	35	=E1/255.2	Feed-through terminal block PT 1,5/S	3208100	PHOENIX CONTACT
=E1-X10	36	=E1/255.2	Feed-through terminal block PT 1,5/S	3208100	PHOENIX CONTACT
=E1-X10	37	=E1/255.2	Feed-through terminal block PT 1,5/S	3208100	PHOENIX CONTACT
=E1-X10	38	=E1/255.2	Feed-through terminal block PT 1,5/S	3208100	PHOENIX CONTACT
=E1-X10	39	=E1/255.2	Feed-through terminal block PT 1,5/S	3208100	PHOENIX CONTACT
=E1-X10	40	=E1/255.5	Feed-through terminal block PT 1,5/S	3208100	PHOENIX CONTACT
=E1-X10	41	=E1/255.5	Feed-through terminal block PT 1,5/S	3208100	PHOENIX CONTACT
=E1-X10	42	=E1/255.6	Feed-through terminal block PT 1,5/S	3208100	PHOENIX CONTACT
=E1-X10	43	=E1/255.6	Feed-through terminal block PT 1,5/S	3208100	PHOENIX CONTACT
=E1-X10	44	=E1/255.6	Feed-through terminal block PT 1,5/S	3208100	PHOENIX CONTACT
=E1-X10	45	=E1/255.6	Feed-through terminal block PT 1,5/S	3208100	PHOENIX CONTACT
=E1-X10	46	=E1/255.6	Feed-through terminal block PT 1,5/S	3208100	PHOENIX CONTACT
=E1-X10	47	=E1/255.6	Feed-through terminal block PT 1,5/S	3208100	PHOENIX CONTACT
=E1-X10	48	=E1/255.7	Feed-through terminal block PT 1,5/S	3208100	PHOENIX CONTACT
=E1-X10	49	=E1/255.7	Feed-through terminal block PT 1,5/S	3208100	PHOENIX CONTACT
=E1-X10	50	=E1/255.7	Feed-through terminal block PT 1,5/S	3208100	PHOENIX CONTACT
=E1-X10	51	=E1/255.7	Feed-through terminal block PT 1,5/S	3208100	PHOENIX CONTACT
=E1-X10	52	=E1/330.1	Feed-through terminal block PT 1,5/S	3208100	PHOENIX CONTACT
=E1-X10	53	=E1/330.1	Feed-through terminal block PT 1,5/S	3208100	PHOENIX CONTACT
=E1-X10	54	=E1/330.2	Feed-through terminal block PT 1,5/S	3208100	PHOENIX CONTACT
=E1-X10	55	=E1/330.2	Feed-through terminal block PT 1,5/S	3208100	PHOENIX CONTACT
=E1-X10	56	=E1/330.2	Feed-through terminal block PT 1,5/S	3208100	PHOENIX CONTACT
=E1-X10	57	=E1/531.4	Feed-through terminal block PT 1,5/S	3208100	PHOENIX CONTACT
=E1-X10	57	=E1/531.4	2 PT 1,5 busbar	FBS 2-3,5 3213014	PHOENIX CONTACT
=E1-X10	58	=E1/531.5	Feed-through terminal block PT 1,5/S	3208100	PHOENIX CONTACT
=E1-X10	59	=E1/531.6	Feed-through terminal block PT 1,5/S	3208100	PHOENIX CONTACT
=E1-X10	59	=E1/531.6	2 PT 1,5 busbar	FBS 2-3,5 3213014	PHOENIX CONTACT
=E1-X10	60	=E1/531.6	Feed-through terminal block PT 1,5/S	3208100	PHOENIX CONTACT
=E1-X10	61	=E1/531.7	Feed-through terminal block PT 1,5/S	3208100	PHOENIX CONTACT
=E1-X10	61	=E1/531.7	2 PT 1,5 busbar	FBS 2-3,5 3213014	PHOENIX CONTACT
=E1-X10	62	=E1/531.8	Feed-through terminal block PT 1,5/S	3208100	PHOENIX CONTACT
=E1-X10	63	=E1/532.3	Feed-through terminal block PT 1,5/S	3208100	PHOENIX CONTACT
=E1-X10	63	=E1/532.3	2 PT 1,5 busbar	FBS 2-3,5 3213014	PHOENIX CONTACT

IK4 TEKNIKER Research Alliance

IK4-TEKNIKER
AVDA. OTAOLA 20
20600 Eibar (Gipuzkoa) Spain
Tfno.:(+34) 943 206744
Fax: (+34) 943 202757
Web: www.tekniker.es

Date	23/02/2017						
Reviewed	F.LÓPEZ	2.3	15/12/2017	JOSE MANUEL			
Drew by	jcastano	Review	Date	Name	Review	Date	Name

3151_LSST

MCS Design Electrical Schematics

LSST TELESCOPE

Replaces | Replaced by

Parts list : PXC.3208100 - PXC.3213014

Customer: EMPRESARIOS AGRUPADOS
C/Magallanes, 3
28015 MADRID
91 3098000
http://www.empresariosagrupados.es/

= REPORT
+ TMA-AZ-CS-CBT-0001

Parts list

TEKNIKER_v2

DEVICE TAG		PLACEMENT	DESCRIPTION	REFERENCE	MANUFACTURER
=E1-X10	64	=E1/532.4	Feed-through terminal block PT 1,5/S	3208100	PHOENIX CONTACT
=E1-X10	65	=E1/532.5	Feed-through terminal block PT 1,5/S	3208100	PHOENIX CONTACT
=E1-X10	65	=E1/532.5	2 PT 1,5 busbar	FBS 2-3,5 3213014	PHOENIX CONTACT
=E1-X10	66	=E1/532.5	Feed-through terminal block PT 1,5/S	3208100	PHOENIX CONTACT
=E1-X10	67	=E1/532.6	Feed-through terminal block PT 1,5/S	3208100	PHOENIX CONTACT
=E1-X10	67	=E1/532.6	2 PT 1,5 busbar	FBS 2-3,5 3213014	PHOENIX CONTACT
=E1-X10	68	=E1/532.7	Feed-through terminal block PT 1,5/S	3208100	PHOENIX CONTACT
=E1-X10	69	=E1/701.1	Feed-through terminal block "Push-in" PT 2,5	3209510	PHOENIX CONTACT
=E1-X10	70	=E1/701.1	Feed-through terminal block "Push-in" PT 2,5	3209510	PHOENIX CONTACT
=E1-X10	71	=E1/701.1	Feed-through terminal block "Push-in" PT 2,5	3209510	PHOENIX CONTACT
=E1-X10	72	=E1/701.3	Feed-through terminal block "Push-in" PT 2,5	3209510	PHOENIX CONTACT
=E1-X10	73	=E1/701.4	Feed-through terminal block "Push-in" PT 2,5	3209510	PHOENIX CONTACT
=E1-X10	74	=E1/701.4	Feed-through terminal block "Push-in" PT 2,5	3209510	PHOENIX CONTACT
=E1-X10	75	=E1/701.6	Feed-through terminal block "Push-in" PT 2,5	3209510	PHOENIX CONTACT
=E1-X10	76	=E1/701.6	Feed-through terminal block "Push-in" PT 2,5	3209510	PHOENIX CONTACT
=E1-X10	77	=E1/701.6	Feed-through terminal block "Push-in" PT 2,5	3209510	PHOENIX CONTACT
=E1-X10	78	=E1/701.8	Feed-through terminal block "Push-in" PT 2,5	3209510	PHOENIX CONTACT
=E1-X10	79	=E1/701.8	Feed-through terminal block "Push-in" PT 2,5	3209510	PHOENIX CONTACT
=E1-X10	80	=E1/701.8	Feed-through terminal block "Push-in" PT 2,5	3209510	PHOENIX CONTACT
=E1-X10	81	=E1/353.2	Feed-through terminal block PT 1,5/S	3208100	PHOENIX CONTACT
=E1-X10	82	=E1/353.2	Feed-through terminal block PT 1,5/S	3208100	PHOENIX CONTACT
=E1-X10	83	=E1/353.3	Feed-through terminal block PT 1,5/S	3208100	PHOENIX CONTACT
=E1-X10	84	=E1/353.4	Feed-through terminal block PT 1,5/S	3208100	PHOENIX CONTACT
=E1-X10	85	=E1/353.4	Feed-through terminal block PT 1,5/S	3208100	PHOENIX CONTACT
=E1-X10	86	=E1/353.5	Feed-through terminal block PT 1,5/S	3208100	PHOENIX CONTACT
=E1-X10	87	=E1/353.5	Feed-through terminal block PT 1,5/S	3208100	PHOENIX CONTACT
=E1-X11	1	=E1/108.8	Feed-through terminal block PT 1,5/S	3208100	PHOENIX CONTACT
=E1-X11	2	=E1/108.8	Feed-through terminal block PT 1,5/S	3208100	PHOENIX CONTACT
=E1-X11	3	=E1/109.7	Feed-through terminal block PT 1,5/S	3208100	PHOENIX CONTACT
=E1-X11	4	=E1/109.7	Feed-through terminal block PT 1,5/S	3208100	PHOENIX CONTACT
=E1-X11	5	=E1/112.8	Feed-through terminal block PT 1,5/S	3208100	PHOENIX CONTACT
=E1-X11	6	=E1/112.8	Feed-through terminal block PT 1,5/S	3208100	PHOENIX CONTACT
=E1-X11	7	=E1/113.6	Feed-through terminal block PT 1,5/S	3208100	PHOENIX CONTACT
=E1-X11	8	=E1/113.6	Feed-through terminal block PT 1,5/S	3208100	PHOENIX CONTACT
=E1-X12	1.A	=E1/335.1	Multi-level terminal block PT1,5/S	3213713	PHOENIX CONTACT
=E1-X12	2.A	=E1/335.3	Multi-level terminal block PT1,5/S	3213713	PHOENIX CONTACT
=E1-X12	3.A	=E1/336.1	Multi-level terminal block PT1,5/S	3213713	PHOENIX CONTACT
=E1-X12	4.A	=E1/336.3	Multi-level terminal block PT1,5/S	3213713	PHOENIX CONTACT
=E1-X12	5.A	=E1/336.5	Multi-level terminal block PT1,5/S	3213713	PHOENIX CONTACT

IK4 TEKNIKER Research Alliance
IK4-TEKNIKER
AVDA. OTAOLA 20
20600 Eibar (Gipuzkoa) Spain
Tfno.:(+34) 943 206744
Fax: (+34) 943 202757
Web: www.tekniker.es

Date	23/02/2017						
Reviewed	F.LÓPEZ	2.3	15/12/2017	JOSE MANUEL			
Drew by	jcastano	Review	Date	Name	Review	Date	Name

3151_LSST
MCS Design Electrical Schematics
LSST TELESCOPE
Replaces
Replaced by

Parts list : PXC.3208100 - PXC.3213713

Customer: EMPRESARIOS AGRUPADOS
C/Magallanes, 3
28015 MADRID
91 3098000
http://www.empresariosagrupados.es/

= REPORT
+ TMA-AZ-CS-CBT-0001

Parts list

TEKNIKER_v2

DEVICE TAG	PLACEMENT	DESCRIPTION	REFERENCE	MANUFACTURER
=E1-X12 6.A	=E1/336.7	Multi-level terminal block PT1,5/S	3213713	PHOENIX CONTACT
=E1-X12 7.A	=E1/337.1	Multi-level terminal block PT1,5/S	3213713	PHOENIX CONTACT
=E1-X12 8.A	=E1/337.3	Multi-level terminal block PT1,5/S	3213713	PHOENIX CONTACT
=E1-X12 9.A	=E1/337.5	Multi-level terminal block PT1,5/S	3213713	PHOENIX CONTACT
=E1-X12 10.A	=E1/337.7	Multi-level terminal block PT1,5/S	3213713	PHOENIX CONTACT
=E1-X12 11.A	=E1/338.1	Multi-level terminal block PT1,5/S	3213713	PHOENIX CONTACT
=E1-X12 12.A	=E1/338.3	Multi-level terminal block PT1,5/S	3213713	PHOENIX CONTACT
=E1-X12 13.A	=E1/338.6	Multi-level terminal block PT1,5/S	3213713	PHOENIX CONTACT
=E1-X12 14.A	=E1/339.1	Multi-level terminal block PT1,5/S	3213713	PHOENIX CONTACT
=E1-X12 15.A	=E1/339.4	Multi-level terminal block PT1,5/S	3213713	PHOENIX CONTACT
=E1-X12 16.A	=E1/340.1	Multi-level terminal block PT1,5/S	3213713	PHOENIX CONTACT
=E1-X12 17.A	=E1/340.4	Multi-level terminal block PT1,5/S	3213713	PHOENIX CONTACT
=E1-X12 18A	=E1/345.1	Multi-level terminal block PT1,5/S	3213713	PHOENIX CONTACT
=E1-X12 19A	=E1/345.4	Multi-level terminal block PT1,5/S	3213713	PHOENIX CONTACT
=E1-X12 20A	=E1/350.1	Multi-level terminal block PT1,5/S	3213713	PHOENIX CONTACT
=E1-X12 21A	=E1/350.4	Multi-level terminal block PT1,5/S	3213713	PHOENIX CONTACT
=E1-X13 1	=E1/545.8	Feed-through terminal block PT 1,5/S	3208100	PHOENIX CONTACT
=E1-X13 2	=E1/545.8	Feed-through terminal block PT 1,5/S	3208100	PHOENIX CONTACT
=E1-X13 3	=E1/545.9	Feed-through terminal block PT 1,5/S	3208100	PHOENIX CONTACT
=E1-X30 1	=E1/002.1	Ground modular terminal block	3044241	PHOENIX CONTACT
=E1-201X1	=E1/201.0	18-Slot 3U PXI Express Redundant Chassis	PXIe-1086 781720-01	NATIONAL INSTRUMENTS
=E1-212X1	=E1/212.8	sub-db25 female Solder Cup, Gold Flash	5-747913-2	TE-CONNECTIVITY
=E1-212X1	=E1/212.8	D Sub 25 Backshell	5748676-3	TE-CONNECTIVITY
=E1-271X1	=E1/271.8	Female receptacle	04285	LEGRAND
=E1-271X2	=E1/271.8	Schuko plug	0503 15	LEGRAND
=E1-271X3	=E1/271.8	sub-db9 female Solder Cup, Gold Flash	5-747905-2	TE-CONNECTIVITY
=E1-271X3	=E1/271.8	D Sub 25 Backshell	5748676-1	TE-CONNECTIVITY
=E1-272X1	=E1/272.0	sub-db25 female Solder Cup, Gold Flash	5-747913-2	TE-CONNECTIVITY
=E1-202XJ1	=E1/202.1	Female receptacle	04285	LEGRAND
=E1-202XJ3	=E1/202.2	Female receptacle	04285	LEGRAND
=E1-330XJ1F	=E1/330.3	M12 5 PIN shielded female connector	690150409	SENSOREX
=E1-101Y1	=E1/101.0	PROPORTIONAL VALVE	SAX61.03	SIEMENS

IK4 TEKNIKER Research Alliance
IK4-TEKNIKER
AVDA. OTAOLA 20
20600 Eibar (Gipuzkoa) Spain
Tfno.:(+34) 943 206744
Fax: (+34) 943 202757
Web: www.tekniker.es

Date	23/02/2017						
Reviewed	F.LÓPEZ	2.3	15/12/2017	JOSE MANUEL			
Drew by	jcastano	Review	Date	Name	Review	Date	Name

3151_LSST

MCS Design Electrical Schematics

LSST TELESCOPE

Replaces | Replaced by

Parts list : PXC.3213713 - SIE.SAX61-03

Customer: EMPRESARIOS AGRUPADOS
C/Magallanes, 3
28015 MADRID
91 3098000
http://www.empresariosagrupados.es/

= REPORT
+ TMA-AZ-CS-CBT-0001

Terminal diagram

F13_001_TK_V2

Strip

=E1+TMA-AZ-CS-CBT-0001-X1

distribution terminal block

Function text	Cable name / Cable type	Target designation	Connection point	Terminal	Jumper	Wire	Target designation	Connection point	Cable name / Cable type	Page / column
230V 50HZ		-030F1	1	1		1L1.1	1L1.1			/010.5
=		-101F2	1	2		1L1.1	-101F1	1		/101.6
=				3		1L1.1	-260K2	1/L1		/202.3
=				4		1L1.1				/202.4
=				5		1L1.1				/202.4
=		-030F1	4	6		1L2.1	1L2.1			/010.5
=		-101F3	1	7		1L2.1	-101E1	N		/101.6
=				8		1L2.1	-260K2	3/L2		/202.3
=				9		1L2.1				/202.4
=				10		1L2.1				/202.4
=		-101M1		11		1L3.1	1L3.1			/010.5
=				12		1L3.1	-101M2			/202.3
=				13		1L3.1				/202.4
=				14		1L3.1				/202.4
=				15		1L3.1				/202.5
24 VDC		-026F1	1	16		+V1	+V			/020.2
=		-026F2	1	17		+V1	+V			/020.2
=				18		+V1	-026F3	1		/026.5
=				19		0V1	0V			/020.2
=				20		0V1	0V			/020.2
=				21		0V1				/026.5
24 VDC CONTROL				22		+V4	-026F1	2.1		/026.2
=		-220A1	Ul:a1	23		+V4	-206A1-PWR1	1		/206.1
=		-220A40	UA:a1	24		+V4	-220A30	Ul:a1		/233.1
=		-X10	28	25		+V4	-220A35	Ul:a1		/244.7
=		-260U1-C	98	26		+V4	-X10	40		/255.6
=		-260K3	11	27		+V4	-260K3	A1		/260.8
=		-X10	52	28		+V4	-261U1-C	98		/261.3
=		-501A1-VIN	1	29		+V4	-X12	1.A		/335.3
=		-500FA2	11	30		+V4	-500A1-X1	X1		/502.1
=		-X13	1	31		+V4	-500FA3	11		/502.5
=				32		+V4				/502.8
=				33		+V4				/502.9
=				34		+V4				/502.9
=				35		0V4				/026.2

IK4 TEKNIKER Research Alliance
IK4-TEKNIKER
AVDA. OTAOLA 20
20600 Eibar (Gipuzkoa) Spain
Tfno.:(+34) 943 206744
Fax: (+34) 943 202757
Web: www.tekniker.es

Date	23/02/2017					
Reviewed	F.LÓPEZ	2.3	15/12/2017	JOSE MANUEL		
Drew by	jcastano	Review	Date	Name	Review	Date	Name

3151_LSST

MCS Design Electrical Schematics

LSST TELESCOPE

Replaces | Replaced by

Terminal diagram
=E1+TMA-AZ-CS-CBT-0001-X1

Customer: EMPRESARIOS AGRUPADOS
C/Magallanes, 3
28015 MADRID
91 3098000
http://www.empresariosagrupados.es/

= REPORT
+ TMA-AZ-CS-CBT-0001

Terminal diagram

F13_001_TK_V2

Strip

=E1+TMA-AZ-CS-CBT-0001-X1

distribution terminal block

Function text	Cable name / Cable type	Target designation	Connection point	Terminal	Jumper	Wire	Target designation	Connection point	Cable name / Cable type	Page / column
24 VDC CONTROL		-220A1	Ul:b1	36		0V4	-206A1-PWR1	2		/206.1
=		-220A40	UA:b1	37		0V4	-220A30	Ul:b1		/238.0
=		-X10	29	38		0V4	-220A35	Ul:b1		/244.7
=		-260K2	A2	39		0V4	-X10	41		/255.6
		-260U1-C	99							
24 VDC CONTROL		-261U1-C	99	40		0V4	-260K1	A2		/261.2
=		-X12	1.B	41		0V4	-X10	53		/330.5
=		-500A1-X1	X1	42		0V4	-501A1-VIN	2		/502.1
=		-500FA3	21	43		0V4	-500FA2	21		/502.2
=				44		0V4	-X13	2		/502.7
=				45		0V4				/502.8
=				46		0V4				/502.9
=				47		0V4				/502.9
24 VDC I/Os				48		+V5	-026F2	2.1		/026.3
=		-220A20	UO:a1	49		+V5	-220A10	UIO:a1		/222.1
=		-500A1-X2	X2	50		+V5	-230K4	11		/502.2
=				51		+V5	-500FA1	13		/502.7
=				52		+V5				/502.8
=				53		+V5				/502.8
=				54		0V5				/026.3
=		-220A10	UIO:b1	55		0V5				/222.0
=		-X10	87	56		0V5	-220A20	UO:b1		/353.5
=		-500FA1	12	57		0V5	-500A1-X2	X2		/502.4
=				58		0V5				/502.8
=				59		0V5				/502.8
24 VDC VALVES				60		+V6	-026F3	2.1		/026.4
=		-X10	7	61		+V6	-X10	1		/101.1
=		-X10	21	62		+V6	-X10	14		/630.7
=				63		+V6				/631.6
=				64		+V6				/631.7
=				65		0V6				/026.4
=		-X10	8	66		0V6	-X10	2		/101.1
=		-X10	15	67		0V6	-230K1	11		/630.3
=				68		0V6	-X10	22		/631.6
=				69		0V6				/631.7

IK4-TEKNIKER
AVDA. OTAOLA 20
20600 Eibar (Gipuzkoa) Spain
Tfno.:(+34) 943 206744
Fax: (+34) 943 202757
Web: www.tekniker.es

Date	23/02/2017						
Reviewed	F.LÓPEZ	2.3	15/12/2017	JOSE MANUEL			
Drew by	jcastano	Review	Date	Name	Review	Date	Name

3151_LSST — MCS Design Electrical Schematics

LSST TELESCOPE

Replaces — Replaced by

Terminal diagram
=E1+TMA-AZ-CS-CBT-0001-X1

Customer: EMPRESARIOS AGRUPADOS
C/Magallanes, 3
28015 MADRID
91 3098000
http://www.empresariosagrupados.es/

= REPORT
+ TMA-AZ-CS-CBT-0001

Terminal diagram

F13_001_TK_V2

Strip

=E1+TMA-AZ-CS-CBT-0001-X2

distribution terminal block whit temperature ok

Function text	Cable name / Cable type	Target designation	Connection point	Terminal	Jumper	Wire	Target designation	Connection point	Cable name / Cable type	Page / column
230 V 50Hz TEMPERATURE OK		-202XJ1	L1	1		2L1.1	2L1.1			/015.5
=				2		2L1.1	-271X1	L1		/271.2
=				3		2L1.1				/271.2
=				4		2L1.1				/271.3
=		-202XJ1	N	5		2L2.1	2L2.1			/015.5
=				6		2L2.1				/271.2
=				7		2L2.1				/271.2
=				8		2L2.1				/271.3
=		-271X1	N	9		2L3.1	2L3.1			/015.5
=				10		2L3.1				/271.2
=				11		2L3.1				/271.2
=				12		2L3.1				/271.3
24VDC CONTROL TEMPERATURE OK		-206A1-PWR2	1	13		+V2	+V2			/025.1
=		-210A1	POWER:V	14		+V2	-209A1	1.1		/211.2
=				15		+V2	-501A1-VIN	5		/501.5
=				16		+V2				/501.5
=		-206A1-PWR2	2	17		0V2	0V2			/025.2
=		-210A1	POWER:C	18		0V2	-209A1	1.3		/211.2
=				19		0V2	-501A1-VIN	6		/501.5
=				20		0V2				/501.5
24 VDC MOTION TEMPERATURE OK		-105U1	XCV:24V	21		V3	+V3			/025.5
=				22		V3	+V3			/025.5
=		-105U1	X32:9	23		V3				/025.5
=				24		V3	-105U1	X31:5		/107.6
=		-229K1	11	25		V3	-228K3	11		/110.5
=				26		V3				/601.6
=		-105U1	XCV:0V	27		0V3	0V3			/025.6
=				28		0V3	0V3			/025.6
=		-105U1	X32:1	29		0V3				/025.6
=		-X11	2	30		0V3				/110.5
=		-X11	6	31		0V3	-X11	4		/601.3
=				32		0V3	-X11	8		/601.6

IK4-TEKNIKER
AVDA. OTAOLA 20
20600 Eibar (Gipuzkoa) Spain
Tfno.:(+34) 943 206744
Fax: (+34) 943 202757
Web: www.tekniker.es

Date	23/02/2017						
Reviewed	F.LÓPEZ	2.3	15/12/2017	JOSE MANUEL			
Drew by	jcastano	Review	Date	Name	Review	Date	Name

3151_LSST

MCS Design Electrical Schematics

LSST TELESCOPE

Replaces | Replaced by

Terminal diagram
=E1+TMA-AZ-CS-CBT-0001-X2

Customer:

EMPRESARIOS AGRUPADOS
C/Magallanes, 3
28015 MADRID
91 3098000
http://www.empresariosagrupados.es/

= REPORT
+ TMA-AZ-CS-CBT-0001

Terminal diagram

F13_001_TK_V2

Strip

=E1+TMA-AZ-CS-CBT-0001-X10

FIELD terminal block

Function text				+TMA_E-630W3	+TMA_E-630W2	+TMA_E-630W1	-101W2	-101W1	Cable name	Target designation	Connection point	Terminal	Jumper	Wire	Target designation	Connection point	Cable name	-260W1	-236W1	-244W1	-236W2	Page / column
				SHIELDED 4G1,5	shielded 3X0,5	SHIELDED 4G1,5	SUPERTRONIC ® 330-C-PUR3 3x0,34 mm²	1Z-602-CY 3G1	Cable type								Cable type	SUPER-PAAR-TRONIC 340-C-PUR 1x2x0,34 mm²	SUPER-PAAR-TRONIC 340-C-PUR 1x2x0,34 mm²	SUPER-PAAR-TRONIC 340-C-PUR 1x2x0,34 mm²	SUPER-PAAR-TRONIC 340-C-PUR 1x2x0,34 mm²	
Mixing Valve								1		-101Y1	G	1		+V6	-X1	61						/101.1
=								2		-101Y1	G0	2		0V6	-X1	66						/101.1
=							WH			-101Y1	Y	3			-260U1-A	H3		WH				/101.2
=							BN			-101Y1	M	4			-260U1-A	F3		BN				/101.2
=												5			-220A33	1:10			BN			/101.2
=							GN			-101Y1	U	6			-220A33	1:00			WH			/101.3
AZIMUTH 1-8 MIXING VALVE						1				+TMA_E-630Y1	G	7		+V6	-X1	61						/630.0
=						2				+TMA_E-630Y1	G0	8		0V6	-X1	66						/630.1
=						3				+TMA_E-630Y1	Z	9		630.198	-230K1	14						/630.1
=					WH					+TMA_E-630Y1	Y	10			-220A35	1:00				WH		/630.2
=					BN					+TMA_E-630Y1	M	11			-220A35	1:20				BN		/630.2
=												12			-220A33	1:11					BN	/630.3
=					GN					+TMA_E-630Y1	U	13			-220A33	1:01					WH	/630.3
AZIMUTH 9-16 MIXING VALVE				1						+TMA_E-630Y2	G	14		+V6	-X1	62						/630.5
=				2						+TMA_E-630Y2	G0	15		0V6	-X1	67						/630.5
=				3						+TMA_E-630Y2	Z	16		630.199	-230K2	14						/630.5

IK4-TEKNIKER
AVDA. OTAOLA 20
20600 Eibar (Gipuzkoa) Spain
Tfno.:(+34) 943 206744
Fax: (+34) 943 202757
Web: www.tekniker.es

Date	23/02/2017							
Reviewed	F.LÓPEZ	2.3	15/12/2017	JOSE MANUEL				
Drew by	jcastano	Review	Date	Name	Review	Date	Name	

3151_LSST

MCS Design Electrical Schematics

LSST TELESCOPE

Replaces | Replaced by

Terminal diagram
=E1+TMA-AZ-CS-CBT-0001-X10

Customer: EMPRESARIOS AGRUPADOS
C/Magallanes, 3
28015 MADRID
91 3098000
http://www.empresariosagrupados.es/

= REPORT
+ TMA-AZ-CS-CBT-0001

Terminal diagram

F13_001_TK_V2

Strip

=E1+TMA-AZ-CS-CBT-0001-X10

FIELD terminal block

Function text				+TMA_E-255W6	+TMA_E-255W5	+TMA_E-631W2	+TMA_E-631W1	+TMA_E-630W4	Cable name	Target designation	Connection point	Terminal	Jumper	Wire	Target designation	Connection point	Cable name	-244W2	-236W3	-244W3	-236W4	Page / column
				LiY-CY 14x1	LiY-CY 14x1	shielded 3X0,5	SHIELDED 4G1,5	shielded 3X0,5	Cable type								Cable type	SUPER-PAAR-TRONIC 340-C-PUR 1x2x0,34 mm²	SUPER-PAAR-TRONIC 340-C-PUR 1x2x0,34 mm²	SUPER-PAAR-TRONIC 340-C-PUR 1x2x0,34 mm²	SUPER-PAAR-TRONIC 340-C-PUR 1x2x0,34 mm²	
AZIMUTH 9-16 MIXING VALVE								WH		+TMA_E-630Y2	Y	17			-220A35	1:01		WH				/630.6
=								BN		+TMA_E-630Y2	M	18			-220A35	1:21		BN				/630.7
=												19			-220A33	2:12			BN			/630.7
=								GN		+TMA_E-630Y2	U	20			-220A33	2:02			WH			/630.7
ELEVATION 1-6 MIXING VALVE							1			+TMA_E-631Y1	G	21		+V6	-X1	62						/631.2
=							2			+TMA_E-631Y1	G0	22		0V6	-X1	68						/631.2
=							3			+TMA_E-631Y1	Z	23		631.200	-230K3	14						/631.3
=						WH				+TMA_E-631Y1	Y	24			-220A35	2:02				WH		/631.4
=						BN				+TMA_E-631Y1	M	25			-220A35	2:22				BN		/631.4
=												26			-220A33	2:13					BN	/631.4
=						GN				+TMA_E-631Y1	U	27			-220A33	2:03					WH	/631.5
HANDHELD1					WH					+TMA-AZ-CS-CBT-0102-255U1-X1	1	28		+V4	-X1	25						/255.0
=					BN					+TMA-AZ-CS-CBT-0102-255U1-X1	2	29		0V4	-X1	38						/255.0
=					GN					+TMA-AZ-CS-CBT-0102-255U1-X1	3	30		514.176	-500A14	12						/255.1
=					YE					+TMA-AZ-CS-CBT-0102-255U1-X1	4	31		E504.0	-500A14	11						/255.1
=					GY					+TMA-AZ-CS-CBT-0102-255U1-X1	5	32		514.177	-500A14	13						/255.1
=					PK					+TMA-AZ-CS-CBT-0102-255U1-X1	6	33		E504.1	-500A14	14						/255.1
=					BU					+TMA-AZ-CS-CBT-0102-255U1-X1	7	34		514.178	-500A14	22						/255.1
=					RD					+TMA-AZ-CS-CBT-0102-255U1-X1	8	35		E504.2	-500A14	21						/255.2
=					BK					+TMA-AZ-CS-CBT-0102-255U1-X1	9	36		514.180	-500A14	23						/255.2
=					VT					+TMA-AZ-CS-CBT-0102-255U1-X1	10	37		E504.3	-500A14	24						/255.2
=					GY/PK					+TMA-AZ-CS-CBT-0102-X1	1	38		521.01	-500A21	12						/255.2
=					RD/BU					+TMA-AZ-CS-CBT-0102-X1	2	39		E511.0	-500A21	11						/255.2
HANDHELD 2				WH						+TMA-AZ-CS-CBT-0103-255U1-X1	1	40		+V4	-X1	26						/255.5
=				BN						+TMA-AZ-CS-CBT-0103-255U1-X1	2	41		0V4	-X1	39						/255.5
=				GN						+TMA-AZ-CS-CBT-0103-255U1-X1	3	42		515.181	-500A15	12						/255.6
=				YE						+TMA-AZ-CS-CBT-0103-255U1-X1	4	43		E505.0	-500A15	11						/255.6
=				GY						+TMA-AZ-CS-CBT-0103-255U1-X1	5	44		515.182	-500A15	13						/255.6
=				PK						+TMA-AZ-CS-CBT-0103-255U1-X1	6	45		E505.1	-500A15	14						/255.6
=				BU						+TMA-AZ-CS-CBT-0103-255U1-X1	7	46		515.183	-500A15	22						/255.6
=				RD						+TMA-AZ-CS-CBT-0103-255U1-X1	8	47		E505.2	-500A15	21						/255.6
=				BK						+TMA-AZ-CS-CBT-0103-255U1-X1	9	48		515.184	-500A15	23						/255.7
=				VT						+TMA-AZ-CS-CBT-0103-255U1-X1	10	49		E505.3	-500A15	24						/255.7
=				GY/PK						+TMA-AZ-CS-CBT-0103-X1	1	50		521.02	-500A21	13						/255.7
=				RD/BU						+TMA-AZ-CS-CBT-0103-X1	2	51		E511.1	-500A21	14						/255.7

IK4 TEKNIKER Research Alliance

IK4-TEKNIKER
AVDA. OTAOLA 20
20600 Eibar (Gipuzkoa) Spain
Tfno.:(+34) 943 206744
Fax: (+34) 943 202757
Web: www.tekniker.es

Date	23/02/2017							
Reviewed	F.LÓPEZ	2.3	15/12/2017	JOSE MANUEL				
Drew by	jcastano	Review	Date	Name	Review	Date	Name	

3151_LSST

MCS Design Electrical Schematics

LSST TELESCOPE

Replaces | Replaced by

Terminal diagram
=E1+TMA-AZ-CS-CBT-0001-X10

Customer: EMPRESARIOS AGRUPADOS
C/Magallanes, 3
28015 MADRID
91 3098000
http://www.empresariosagrupados.es/

= REPORT

+ TMA-AZ-CS-CBT-0001

Terminal diagram

F13_001_TK_V2

Strip

=E1+TMA-AZ-CS-CBT-0001-X10

FIELD terminal block

Function text	+TMA_E-701W3	+TMA_E-701W2	+TMA_E-701W1	+TMA_E-153W1	+TMA_E-150W1	+TMA_E-140W1	+TMA_E-136W1	+TMA_E-330W1	Cable name	Target designation	Connection point	Terminal	Jumper	Wire	Target designation	Connection point	Cable name	-233W1				Page / column
	SHIELDED 4G2,5	SHIELDED 4G2,5	shielded 4G2,5	shielded 3x1	Shielded 3x1mm2	3x1 Shielded	Shielded 3x1mm2	SHIELDED LiCYC 5x0,34	Cable type								Cable type	SUPER-PAAR-TRONIC 340-C-PUR 1x2x0,34 mm²				
LVDT AZIMUTH CABLE WRAP								WH		-330XJ1F	1	52		+V4	-X1	28						/330.1
=								BN		-330XJ1F	2	53		0V4	-X1	41						/330.1
=								GN		-330XJ1F	3	54			-220A30	1:00		WH				/330.2
=								GY		-330XJ1F	4	55										/330.2
=								PK		-330XJ1F	5	56			-220A30	1:10		BN				/330.2
STO AZIMUTH							1			+TMA-AZ-DR-CBT-0003-X1		57		A506.0	-500A36	11						/531.4
=						1				+TMA-AZ-DR-CBT-0005-X1		58										/531.5
=							2			+TMA-AZ-DR-CBT-0003-X1		59		A506.1	-500A36	21						/531.6
=						2				+TMA-AZ-DR-CBT-0005-X1		60										/531.6
=							3			+TMA-AZ-DR-CBT-0003-X1		61		136.126	-500A36	22						/531.7
=						3				+TMA-AZ-DR-CBT-0005-X1		62										/531.8
STO ELEVATION					1					+TMA-AZ-DR-CBT-0007-X1		63		A507.0	-500A37	11						/532.3
=				1						+TMA-AZ-DR-CBT-0008-X1		64										/532.4
=					2					+TMA-AZ-DR-CBT-0007-X1		65		A507.1	-500A37	21						/532.5
=				2						+TMA-AZ-DR-CBT-0008-X1		66										/532.5
=					3					+TMA-AZ-DR-CBT-0007-X1		67		150.127	-500A37	22						/532.6
=				3						+TMA-AZ-DR-CBT-0008-X1		68										/532.7
400v 50Hz AZCW 1 AUXILIARY BOX (PIER)			1							+TMA-AZ-UC-AC4-X9		69		L1.1	-002D1-L1							/701.1
=			2							+TMA-AZ-UC-AC4-X9		70		L2.1	-002D1-L2							/701.1
=			3							+TMA-AZ-UC-AC4-X9		71		L3.1	-002D1-L3							/701.1
400v 50Hz AZ1 AUXILIARY BOX		1								+TMA-AZ-CS-CBT-0101-X10	1	72		L1.1	-002D1-L1	3						/701.3
=		2								+TMA-AZ-CS-CBT-0101-X10	3	73		L2.1	-002D1-L2	3						/701.4
=		3								+TMA-AZ-CS-CBT-0101-X10	5	74		L3.1	-002D1-L3	3						/701.4
400v 50Hz EL1 AUXILIARY BOX	1									+TMA-AZ-UC-EC1-X5		75		L1.1	-002D1-L1							/701.6
=	2									+TMA-AZ-UC-EC1-X5		76		L2.1	-002D1-L2							/701.6
=	3									+TMA-AZ-UC-EC1-X5		77		L3.1	-002D1-L3							/701.6

◁ 2004.a

2004.c ▷

IK4-TEKNIKER
AVDA. OTAOLA 20
20600 Eibar (Gipuzkoa) Spain
Tfno.:(+34) 943 206744
Fax: (+34) 943 202757
Web: www.tekniker.es

Date	23/02/2017							
Reviewed	F.LÓPEZ	2.3	15/12/2017	JOSE MANUEL				
Drew by	jcastano	Review	Date	Name	Review	Date	Name	

3151_LSST

MCS Design Electrical Schematics

LSST TELESCOPE

Replaces | Replaced by

Terminal diagram
=E1+TMA-AZ-CS-CBT-0001-X10

Customer:

EMPRESARIOS AGRUPADOS
C/Magallanes, 3
28015 MADRID
91 3098000
http://www.empresariosagrupados.es/

= REPORT
+ TMA-AZ-CS-CBT-0001

Terminal diagram

F13_001_TK_V2

Strip

=E1+TMA-AZ-CS-CBT-0001-X10

FIELD terminal block

Function text	+TMA_E-353W2	+TMA_E-701W44	Cable name	Target designation	Connection point	Terminal	Jumper	Wire	Target designation	Connection point	Cable name	Page / column
	SHIELDED 7x1	SHIELDED 4G2,5	Cable type								Cable type	
400v 50Hz EL2 AUXILIARY BOX		1		+TMA-AZ-UC-EC2-X8		78	,	L1.1	-002D1-L1	4		/701.8
=		2		+TMA-AZ-UC-EC2-X8		79	,	L2.1	-002D1-L2	4		/701.8
=		3		+TMA-AZ-UC-EC2-X8		80	,	L3.1	-002D1-L3	4		/701.8
AZIMUTH PANEL SIGNALS	1			+TMA-AZ-PD-CBT-0001-K1	13	81	,	225.1	-220A11	5:50		/353.2
=	2			+TMA-AZ-PD-CBT-0001-K1	14	82	,	E11.8	-220A11	5:40		/353.2
=	3			+TMA-AZ-PD-CBT-0001-K2	13	83	,	225.2	-220A11	5:51		/353.3
=	4			+TMA-AZ-PD-CBT-0001-K2	14	84	,	E11.9	-220A11	5:41		/353.4
=	5			+TMA-AZ-PD-CBT-0001-K2	OPEN	85	,	353.01	-230K4	14		/353.4
=	6			+TMA-AZ-PD-CBT-0001-K2	CLOSED	86	,	353.02	-230K5	14		/353.5
=	7			+TMA-AZ-PD-CBT-0001-K2	COM	87	,	0V5	-X1	56		/353.5

IK4-TEKNIKER
AVDA. OTAOLA 20
20600 Eibar (Gipuzkoa) Spain
Tfno.:(+34) 943 206744
Fax: (+34) 943 202757
Web: www.tekniker.es

Date	23/02/2017							
Reviewed	F.LÓPEZ	2.3	15/12/2017	JOSE MANUEL				
Drew by	jcastano	Review	Date	Name	Review	Date	Name	

3151_LSST

MCS Design Electrical Schematics

LSST TELESCOPE

Replaces | Replaced by

Terminal diagram
=E1+TMA-AZ-CS-CBT-0001-X10

Customer: EMPRESARIOS AGRUPADOS
C/Magallanes, 3
28015 MADRID
91 3098000
http://www.empresariosagrupados.es/

= REPORT

+ TMA-AZ-CS-CBT-0001

Terminal diagram

F13_001_TK_V2

Strip

=E1+TMA-AZ-CS-CBT-0001-X11

FOR MSK BRAKE terminal block

Function text	+TMA_E-113W2	+TMA_E-112W2	+TMA_E-109W2	+TMA_E-108W2	Cable name	Target designation	Connection point	Terminal	Jumper	Wire	Target designation	Connection point	Cable name	Page / column
	RKL0014	RKL0014	RKL0050	RKL0050	Cable type								Cable type	
BRAKE AZIMUTH CABLE WRAP 1				7		+TMA-AZ-UC-AC4-X2		1	,	601.92	-229K1	14		/108.8
=				8		+TMA-AZ-UC-AC4-X2		2	,	0V3	-X2	30		/108.8
BRAKE AZIMUTH CABLE WRAP 2			7			+TMA-AZ-UC-AC4-X4		3	,	601.96	-229K2	14		/109.7
=			8			+TMA-AZ-UC-AC4-X4		4	,	0V3	-X2	31		/109.7
BRAKE CAMERA CABLE WRAP 1		7				+TMA-AZ-UC-EC2-X2		5	,	601.100	-229K3	14		/112.8
=		8				+TMA-AZ-UC-EC2-X2		6	,	0V3	-X2	31		/112.8
BRAKE CAMERA CABLE WRAP 2	7					+TMA-AZ-UC-EC2-X4		7	,	601.102	-229K4	14		/113.6
=	8					+TMA-AZ-UC-EC2-X4		8	,	0V3	-X2	32		/113.6

◁ 2004.c

2006 ▷

IK4-TEKNIKER
AVDA. OTAOLA 20
20600 Eibar (Gipuzkoa) Spain
Tfno.:(+34) 943 206744
Fax: (+34) 943 202757
Web: www.tekniker.es

Date	23/02/2017							
Reviewed	F.LÓPEZ	2.3	15/12/2017	JOSE MANUEL				
Drew by	jcastano	Review	Date	Name	Review	Date	Name	

3151_LSST
MCS Design Electrical Schematics
LSST TELESCOPE

Replaces | Replaced by

Terminal diagram
=E1+TMA-AZ-CS-CBT-0001-X11

Customer: EMPRESARIOS AGRUPADOS
C/Magallanes, 3
28015 MADRID
91 3098000
http://www.empresariosagrupados.es/

= REPORT
+ TMA-AZ-CS-CBT-0001

Terminal diagram

F13_001_TK_V2

Strip

=E1+TMA-AZ-CS-CBT-0001-X12

4-20mA SENSORS Terminal block

Function text				+TMA_E-336W3	+TMA_E-336W2	+TMA_E-336W1	+TMA_E-335W2	+TMA_E-335W1	Cable name	Target designation	Connection point	Terminal	Jumper	Wire	Target designation	Connection point	Cable name	-233W2	-233W3	-233W4	-233W5	Page / column
				LiCYC 2x0,34	LiCYC 2x0,34	LiCYC 2x0,34	LiCYC 2x0,34	LiCYC 2x0,34	Cable type								Cable type	SUPER-PAAR-TRONIC 340-C-PUR 1x2x0,34 mm²	SUPER-PAAR-TRONIC 340-C-PUR 1x2x0,34 mm²	SUPER-PAAR-TRONIC 340-C-PUR 1x2x0,34 mm²	SUPER-PAAR-TRONIC 340-C-PUR 1x2x0,34 mm²	
AZCW+ COOLING CIRCUIT IN PRESSURE								WH		+TMA_E-335X1	1	1.A		+V4	-X1	29						/335.1
=										-X1	41	1.B			-220A30	1:31		BN				/335.1
=								BN		+TMA_E-335X1	3	1.C			-220A30	1:21		WH				/335.1
AZCW+ COOLING CIRCUIT OUT PRESSURE							WH			+TMA_E-335X2	1	2.A										/335.3
=												2.B			-220A30	2:32			BN			/335.4
=							BN			+TMA_E-335X2	3	2.C			-220A30	2:22			WH			/335.4
AZ 1-8 DRIVERS COOLING CIRCUIT OUT PRESSURE						WH				+TMA_E-336X1	1	3.A										/336.1
=												3.B			-220A30	2:33				BN		/336.1
=						BN				+TMA_E-336X1	3	3.C			-220A30	2:23				WH		/336.1
OSS AZIMUTH IO CABINET OUTLET PRESSURE +X					WH					+TMA_E-336X2	1	4.A										/336.3
=												4.B			-220A30	3:34					BN	/336.3
=					BN					+TMA_E-336X2	3	4.C			-220A30	3:24					WH	/336.3
OSS ELEVATION IO CABINET OUTLET PRESSURE +X				WH						+TMA_E-336X3	1	5.A										/336.5

◁ 2005

2006.a ▷

IK4-TEKNIKER
AVDA. OTAOLA 20
20600 Eibar (Gipuzkoa) Spain
Tfno.:(+34) 943 206744
Fax: (+34) 943 202757
Web: www.tekniker.es

Date	23/02/2017							
Reviewed	F.LÓPEZ	2.3	15/12/2017	JOSE MANUEL				
Drew by	jcastano	Review	Date	Name	Review	Date	Name	

3151_LSST
MCS Design Electrical Schematics
LSST TELESCOPE

Replaces | Replaced by

Terminal diagram
=E1+TMA-AZ-CS-CBT-0001-X12

Customer: EMPRESARIOS AGRUPADOS
C/Magallanes, 3
28015 MADRID
91 3098000
http://www.empresariosagrupados.es/

= REPORT
+ TMA-AZ-CS-CBT-0001

Terminal diagram

F13_001_TK_V2

Strip

=E1+TMA-AZ-CS-CBT-0001-X12

4-20mA SENSORS Terminal block

Function text				+TMA_E-337W4	+TMA_E-337W3	+TMA_E-337W2	+TMA_E-337W1	+TMA_E-336W3	Cable name	Target designation	Connection point	Terminal	Jumper	Wire	Target designation	Connection point	Cable name	-233W6	-233W8	-234W1	-234W2	Page / column
				LiCYC 2x0,34	LiCYC 2x0,34	LiCYC 2x0,34	LiCYC 2x0,34	LiCYC 2x0,34	Cable type								Cable type	SUPER-PAAR-TRONIC 340-C-PUR 1x2x0,34 mm²	SUPER-PAAR-TRONIC 340-C-PUR 1x2x0,34 mm²	SUPER-PAAR-TRONIC 340-C-PUR 1x2x0,34 mm²	SUPER-PAAR-TRONIC 340-C-PUR 1x2x0,34 mm²	
OSS ELEVATION IO CABINET OUTLET PRESSURE +X												5.B			-220A30	3:35		BN				/336.5
=								BN		+TMA_E-336X3	3	5.C			-220A30	3:25		WH				/336.5
=												6.A										/336.7
=												6.B										/336.8
=												6.C										/336.8
AZ 9-16 DRIVERS COOLING CIRCUIT OUT PRESSURE							WH			+TMA_E-337X1	1	7.A										/337.1
=												7.B			-220A30	4:37			BN			/337.1
=							BN			+TMA_E-337X1	3	7.C			-220A30	4:27			WH			/337.1
COMPRESORS MODULE COOLING CIRCUIT OUT PRESSURE						WH				+TMA_E-337X2	1	8.A										/337.3
=												8.B			-220A31	1:30				BN		/337.3
=						BN				+TMA_E-337X2	3	8.C			-220A31	1:20				WH		/337.3
AZ DYNALEN SUPPLY PRESSURE					WH					+TMA_E-337X3	1	9.A										/337.5
=												9.B			-220A31	1:31					BN	/337.5
=					BN					+TMA_E-337X3	3	9.C			-220A31	1:21					WH	/337.5
AZ DYNALEN RETURN PRESSURE				WH						+TMA_E-337X4	1	10.A										/337.7

IK4-TEKNIKER
AVDA. OTAOLA 20
20600 Eibar (Gipuzkoa) Spain
Tfno.:(+34) 943 206744
Fax: (+34) 943 202757
Web: www.tekniker.es

Date	23/02/2017							
Reviewed	F.LÓPEZ	2.3	15/12/2017	JOSE MANUEL				
Drew by	jcastano	Review	Date	Name	Review	Date	Name	

3151_LSST

MCS Design Electrical Schematics

LSST TELESCOPE

Replaces

Replaced by

Terminal diagram
=E1+TMA-AZ-CS-CBT-0001-X12

Customer:
EMPRESARIOS AGRUPADOS
C/Magallanes, 3
28015 MADRID
91 3098000
http://www.empresariosagrupados.es/

= REPORT

+ TMA-AZ-CS-CBT-0001

Terminal diagram

F13_001_TK_V2

Strip
=E1+TMA-AZ-CS-CBT-0001-X12
4-20mA SENSORS Terminal block

Function text				+TMA_E-340W1	+TMA_E-339W2	+TMA_E-339W1	+TMA_E-338W1	+TMA_E-337W4	Cable name	Target designation	Connection point	Terminal	Jumper	Wire	Target designation	Connection point	Cable name	-234W3	-234W4	-234W7	-234W8	Page / column
				LiCYC 2x0,34	LiCYC 2x0,34	LiCYC 2x0,34	LiCYC 2x0,34	LiCYC 2x0,34	Cable type								Cable type	SUPER-PAAR-TRONIC 340-C-PUR 1x2x0,34 mm²	SUPER-PAAR-TRONIC 340-C-PUR 1x2x0,34 mm²	SUPER-PAAR-TRONIC 340-C-PUR 1x2x0,34 mm²	SUPER-PAAR-TRONIC 340-C-PUR 1x2x0,34 mm²	
AZ DYNALEN RETURN PRESSURE												10.B			-220A31	2:32		BN				/337.8
=								BN		+TMA_E-337X4	3	10.C			-220A31	2:22		WH				/337.8
EL 1-6 DRIVERS COOLING CIRCUIT OUT PRESSURE							WH			+TMA_E-338X1	1	11.A										/338.1
=												11.B			-220A31	2:33			BN			/338.1
=							BN			+TMA_E-338X1	3	11.C			-220A31	2:23			WH			/338.1
=												12.A										/338.3
=												12.B										/338.3
=												12.C										/338.4
=												13.A										/338.6
=												13.B										/338.6
=												13.C										/338.6
MCC CABINET COOLING CIRCUIT OUT PRESSURE						WH				+TMA_E-339X1	1	14.A										/339.1
=												14.B			-220A31	4:36				BN		/339.1
=						BN				+TMA_E-339X1	3	14.C			-220A31	4:26				WH		/339.2
AZ PANEL COOLING CIRCUIT OUT PRESSURE					WH					+TMA_E-339X2	1	15.A										/339.4
=												15.B			-220A31	4:37					BN	/339.5
=					BN					+TMA_E-339X2	3	15.C			-220A31	4:27					WH	/339.5
AZ DYNALEN SUPPLY TEMPERATURE				WH						+TMA_E-340B7	+	16.A										/340.1

IK4-TEKNIKER
AVDA. OTAOLA 20
20600 Eibar (Gipuzkoa) Spain
Tfno.:(+34) 943 206744
Fax: (+34) 943 202757
Web: www.tekniker.es

Date	23/02/2017							
Reviewed	F.LÓPEZ	2.3	15/12/2017	JOSE MANUEL				
Drew by	jcastano	Review	Date	Name	Review	Date	Name	

3151_LSST
MCS Design Electrical Schematics
LSST TELESCOPE

Replaces | Replaced by

Terminal diagram
=E1+TMA-AZ-CS-CBT-0001-X12

Customer: EMPRESARIOS AGRUPADOS
C/Magallanes, 3
28015 MADRID
91 3098000
http://www.empresariosagrupados.es/

= REPORT
+ TMA-AZ-CS-CBT-0001

Terminal diagram

F13_001_TK_V2

Strip

=E1+TMA-AZ-CS-CBT-0001-X12

4-20mA SENSORS Terminal block

Function text				+TMA_E-350W2	+TMA_E-350W1	+TMA_E-345W1	+TMA_E-340W2	+TMA_E-340W1	Cable name	Target designation	Connection point	Terminal	Jumper	Wire	Target designation	Connection point	Cable name	-235W1	-235W2	-235W8	-236W7	Page / column
				LiCYC 2x0,34	LiCYC 2x0,34	LiCYC 2x0,34	LiCYC 2x0,34	LiCYC 2x0,34	Cable type								Cable type	SUPER-PAAR-TRONIC 340-C-PUR 1x2x0,34 mm²	SUPER-PAAR-TRONIC 340-C-PUR 1x2x0,34 mm²	SUPER-PAAR-TRONIC 340-C-PUR 1x2x0,34 mm²	SUPER-PAAR-TRONIC 340-C-PUR 1x2x0,34 mm²	
AZ DYNALEN SUPPLY TEMPERATURE												16.B			-220A32	1:30		BN				/340.1
=								BN		+TMA_E-340B7	-	16.C			-220A32	1:20		WH				/340.2
AZ DYNALEN RETURN TEMPERATURE							WH			+TMA_E-340B8	+	17.A										/340.4
=												17.B			-220A32	1:31			BN			/340.5
=							BN			+TMA_E-340B8	-	17.C			-220A32	1:21			WH			/340.5
AZCW+ AIR OUT PRESSURE						WH				+TMA_E-345X1	1	18A										/345.1
=												18B			-220A32	4:37				BN		/345.1
=						BN				+TMA_E-345X1	3	18C			-220A32	4:27				WH		/345.2
=												19A										/345.4
=												19B										/345.5
=												19C										/345.5
AZCW+ COOLING IN TEMPERATURE					WH					+TMA_E-350B1	+	20A										/350.1
=												20B			-220A33	4:36					BN	/350.1
=					BN					+TMA_E-350B1	-	20C			-220A33	4:26					WH	/350.1
AZCW+ COOLING OUT TEMPERATURE				WH						+TMA_E-350B2	+	21A										/350.4

◁ 2006.b

2006.d ▷

IK4-TEKNIKER
AVDA. OTAOLA 20
20600 Eibar (Gipuzkoa) Spain
Tfno.:(+34) 943 206744
Fax: (+34) 943 202757
Web: www.tekniker.es

Date	23/02/2017							
Reviewed	F.LÓPEZ	2.3	15/12/2017	JOSE MANUEL				
Drew by	jcastano	Review	Date	Name	Review	Date	Name	

3151_LSST
MCS Design Electrical Schematics
LSST TELESCOPE

Replaces | Replaced by

Terminal diagram
=E1+TMA-AZ-CS-CBT-0001-X12

Customer: EMPRESARIOS AGRUPADOS
C/Magallanes, 3
28015 MADRID
91 3098000
http://www.empresariosagrupados.es/

= REPORT
+ TMA-AZ-CS-CBT-0001

Terminal diagram

F13_001_TK_V2

Strip

=E1+TMA-AZ-CS-CBT-0001-X12

4-20mA SENSORS Terminal block

Function text								+TMA_E-350W2	Cable name	Target designation	Connection point	Terminal	Jumper	Wire	Target designation	Connection point	Cable name	-236W8				Page / column
								LiCYC 2x0,34	Cable type								Cable type	SUPER-PAAR-TRONIC 340-C-PUR 1x2x0,34 mm²				
AZCW+ COOLING OUT TEMPERATURE												21B			-220A33	4:37		BN				/350.4
=								BN		+TMA_E-350B2	-	21C			-220A33	4:27		WH				/350.5

IK4-TEKNIKER
AVDA. OTAOLA 20
20600 Eibar (Gipuzkoa) Spain
Tfno.:(+34) 943 206744
Fax: (+34) 943 202757
Web: www.tekniker.es

Date	23/02/2017							
Reviewed	F.LÓPEZ	2.3	15/12/2017	JOSE MANUEL				
Drew by	jcastano	Review	Date	Name	Review	Date	Name	

3151_LSST

MCS Design Electrical Schematics

LSST TELESCOPE

Replaces

Replaced by

Terminal diagram
=E1+TMA-AZ-CS-CBT-0001-X12

Customer:
EMPRESARIOS AGRUPADOS
C/Magallanes, 3
28015 MADRID
91 3098000
http://www.empresariosagrupados.es/

= REPORT

+ TMA-AZ-CS-CBT-0001

Terminal diagram

F13_001_TK_V2

Strip

=E1+TMA-AZ-CS-CBT-0001-X13

FOR ENCODER POWER

Function text	+TMA_E-355W3	Cable name	Target designation	Connection point	Terminal	Jumper	Wire	Target designation	Connection point	Cable name	Page / column
	ENCODER	Cable type								Cable type	
ENCODER POWER	+V		+TMA_E-355B3		1	.	+V4	-X1	31		/545.8
=	0V		+TMA_E-355B3		2	.	0V4	-X1	44		/545.8
ENCODER FREE SIGNAL	To		+TMA_E-355B3		3	.					/545.9

◁ 2006.d

2008 ▷

IK4-TEKNIKER
AVDA. OTAOLA 20
20600 Eibar (Gipuzkoa) Spain
Tfno.:(+34) 943 206744
Fax: (+34) 943 202757
Web: www.tekniker.es

Date	23/02/2017						
Reviewed	F.LÓPEZ	2.3	15/12/2017	JOSE MANUEL			
Drew by	jcastano	Review	Date	Name	Review	Date	Name

3151_LSST — MCS Design Electrical Schematics

LSST TELESCOPE

Replaces — Replaced by

Terminal diagram
=E1+TMA-AZ-CS-CBT-0001-X13

Customer: EMPRESARIOS AGRUPADOS
C/Magallanes, 3
28015 MADRID
91 3098000
http://www.empresariosagrupados.es/

= REPORT
+ TMA-AZ-CS-CBT-0001

Terminal diagram

F13_001_TK_V2

Strip

=E1+TMA-AZ-CS-CBT-0001-X30

Function text	Cable name	Cable type	Target designation	Connection point	Terminal	Jumper	Wire	Target designation	Connection point	Cable type	Cable name	Page / column
PE			-002LF1	X3:PE	1	.	PE	PE				/002.1

IK4-TEKNIKER
AVDA. OTAOLA 20
20600 Eibar (Gipuzkoa) Spain
Tfno.:(+34) 943 206744
Fax: (+34) 943 202757
Web: www.tekniker.es

Date	23/02/2017							
Reviewed	F.LÓPEZ	2.3	15/12/2017	JOSE MANUEL				
Drew by	jcastano	Review	Date	Name	Review	Date	Name	

3151_LSST

MCS Design Electrical Schematics

LSST TELESCOPE

Replaces | Replaced by

Terminal diagram
=E1+TMA-AZ-CS-CBT-0001-X30

Customer: EMPRESARIOS AGRUPADOS
C/Magallanes, 3
28015 MADRID
91 3098000
http://www.empresariosagrupados.es/

= REPORT
+ TMA-AZ-CS-CBT-0001

Cable diagram

F09_001_TK1

Cable ID	Cable Type	no. of conductors	cross-section	cable length	function text
=E1+TMA-AZ-CS-CBT-0001-128AW2	SAC-5P-MS SH SCO BK/.../...	2	1		Mirror Cover System 3 LIMIT SWITCH

function text	X-Ref	Connected to	Pin	conductor	Connected to	Pin	X-Ref
	/128A.4	-128AX1	1	**BN**	+TMA_E-128AS1-S1	11	/128A.4
	/128A.4	-128AX1	2	**WH**	+TMA_E-128AS1-S1	12	/128A.4
				BU			
	/128A.5	-128AX1	4	**BK**	+TMA_E-128AS1-S2	12	/128A.5
				GY			
	/128A.5	-128AX1	SH	**SH**	-128AW2		/128A.4

IK4 TEKNIKER Research Alliance

IK4-TEKNIKER
AVDA. OTAOLA 20
20600 Eibar (Gipuzkoa) Spain
Tfno.:(+34) 943 206744
Fax: (+34) 943 202757
Web: www.tekniker.es

Date	23/02/2017						
Reviewed	F.LÓPEZ	2.3	15/12/2017	JOSE MANUEL			
Drew by	jcastano	Review	Date	Name	Review	Date	Name

3151_LSST

MCS Design Electrical Schematics

LSST TELESCOPE

Replaces

Replaced by

Cable diagram
=E1+TMA-AZ-CS-CBT-0001-128AW2

Customer:

EMPRESARIOS AGRUPADOS

EMPRESARIOS AGRUPADOS
C/Magallanes, 3
28015 MADRID
91 3098000

http://www.empresariosagrupados.es/

= REPORT

+ TMA-AZ-CS-CBT-0001

Cable diagram

F09_001_TK1

Cable ID	Cable Type	no. of conductors	cross-section	cable length	function text
=E1+TMA-AZ-CS-CBT-0001-128BW2	SAC-5P-MS SH SCO BK/.../...	2	1		MIRROR COVER LOCK 2 LIMIT SWITCH

function text	X-Ref	Connected to	Pin	conductor	Connected to	Pin	X-Ref
	/128B.4	-128BX1	1	**BN**	+TMA_E-128BS1-S1	11	/128B.4
	/128B.4	-128BX1	2	**WH**	+TMA_E-128BS1-S1	12	/128B.4
				BU			
	/128B.5	-128BX1	4	**BK**	+TMA_E-128BS1-S2	12	/128B.5
				GY			
	/128B.5	-128BX1	SH	**SH**	-128BW2		/128B.4

IK4 TEKNIKER Research Alliance

IK4-TEKNIKER
AVDA. OTAOLA 20
20600 Eibar (Gipuzkoa) Spain
Tfno.:(+34) 943 206744
Fax: (+34) 943 202757
Web: www.tekniker.es

Date	23/02/2017						
Reviewed	F.LÓPEZ	2.3	15/12/2017	JOSE MANUEL			
Drew by	jcastano	Review	Date	Name	Review	Date	Name

3151_LSST — MCS Design Electrical Schematics

LSST TELESCOPE

Replaces — Replaced by

Cable diagram
=E1+TMA-AZ-CS-CBT-0001-128BW2

Customer: EMPRESARIOS AGRUPADOS
C/Magallanes, 3
28015 MADRID
91 3098000
http://www.empresariosagrupados.es/

= REPORT
+ TMA-AZ-CS-CBT-0001

Cable diagram

F09_001_TK1

Cable ID	Cable Type	no. of conductors	cross-section	cable length	function text
=E1+TMA-AZ-CS-CBT-0001-128CW2	SAC-5P-MS SH SCO BK/.../...	2	1		Mirror Cover System 4 LIMIT SWITCH

function text	X-Ref	Connected to	Pin	conductor	Connected to	Pin	X-Ref
	/128C.4	-128CX1	1	**BN**	+TMA_E-128CS1-S1	11	/128C.4
	/128C.4	-128CX1	2	**WH**	+TMA_E-128CS1-S1	12	/128C.4
				BU			
	/128C.5	-128CX1	4	**BK**	+TMA_E-128CS1-S2	12	/128C.5
				GY			
	/128C.5	-128CX1	SH	**SH**	-128CW2		/128C.4

IK4-TEKNIKER
AVDA. OTAOLA 20
20600 Eibar (Gipuzkoa) Spain
Tfno.:(+34) 943 206744
Fax: (+34) 943 202757
Web: www.tekniker.es

Date	23/02/2017						
Reviewed	F.LÓPEZ	2.3	15/12/2017	JOSE MANUEL			
Drew by	jcastano	Review	Date	Name	Review	Date	Name

3151_LSST — MCS Design Electrical Schematics

LSST TELESCOPE

Replaces — Replaced by

Cable diagram
=E1+TMA-AZ-CS-CBT-0001-128CW2

Customer: EMPRESARIOS AGRUPADOS
C/Magallanes, 3
28015 MADRID
91 3098000
http://www.empresariosagrupados.es/

= REPORT
+ TMA-AZ-CS-CBT-0001

Cable diagram

F09_001_TK1

Cable ID	Cable Type	no. of conductors	cross-section	cable length	function text
=E1+TMA-AZ-CS-CBT-0001-128DW2	SAC-5P-MS SH SCO BK/.../...	2	1		MIRROR COVER LOCK 2 LIMIT SWITCH

function text	X-Ref	Connected to	Pin	conductor	Connected to	Pin	X-Ref
	/128D.4	-128DX1	1	**BN**	+TMA_E-128DS1-S1	11	/128D.4
	/128D.4	-128DX1	2	**WH**	+TMA_E-128DS1-S1	12	/128D.4
				BU			
	/128D.5	-128DX1	4	**BK**	+TMA_E-128DS1-S2	12	/128D.5
				GY			
	/128D.5	-128DX1	SH	**SH**	-128DW2		/128D.4

IK4 TEKNIKER Research Alliance

IK4-TEKNIKER
AVDA. OTAOLA 20
20600 Eibar (Gipuzkoa) Spain
Tfno.:(+34) 943 206744
Fax: (+34) 943 202757
Web: www.tekniker.es

Date	23/02/2017						
Reviewed	F.LÓPEZ	2.3	15/12/2017	JOSE MANUEL			
Drew by	jcastano	Review	Date	Name	Review	Date	Name

3151_LSST — MCS Design Electrical Schematics

LSST TELESCOPE

Replaces — Replaced by

Cable diagram
=E1+TMA-AZ-CS-CBT-0001-128DW2

Customer: EMPRESARIOS AGRUPADOS
C/Magallanes, 3
28015 MADRID
91 3098000
http://www.empresariosagrupados.es/

= REPORT
+ TMA-AZ-CS-CBT-0001

Cable diagram

F09_001_TK1

Cable ID	Cable Type	no. of conductors	cross-section	cable length	function text
=E1+TMA-AZ-CS-CBT-0001-030W1	SZ 4315.600	3	1,5		CABINET LIGHT

function text	X-Ref	Connected to	Pin	conductor	Connected to	Pin	X-Ref
	/030.5	-030EA1	-IN:1	**BN**	-030F1	-OUT	/030.5
	/030.5	-030EA1	-IN:2	**BU**	-030F1	-OUT	/030.5
	/030.5	-030EA1	-IN:PE	**GN/YE**	-030F1	-OUT	/030.5

IK4 TEKNIKER Research Alliance

IK4-TEKNIKER
AVDA. OTAOLA 20
20600 Eibar (Gipuzkoa) Spain
Tfno.:(+34) 943 206744
Fax: (+34) 943 202757
Web: www.tekniker.es

Date	23/02/2017						
Reviewed	F.LÓPEZ	2.3	15/12/2017	JOSE MANUEL			
Drew by	jcastano	Review	Date	Name	Review	Date	Name

3151_LSST

MCS Design Electrical Schematics

LSST TELESCOPE

Replaces

Replaced by

Cable diagram
=E1+TMA-AZ-CS-CBT-0001-030W1

Customer:

EMPRESARIOS AGRUPADOS

EMPRESARIOS AGRUPADOS
C/Magallanes, 3
28015 MADRID
91 3098000

http://www.empresariosagrupados.es/

= REPORT

+ TMA-AZ-CS-CBT-0001

Cable diagram

F09_001_TK1

Cable ID	Cable Type	no. of conductors	cross-section	cable length	function text
=E1+TMA-AZ-CS-CBT-0001-030W2	SZ 4315.600	3	1,5		CABINET LIGHT

function text	X-Ref	Connected to	Pin	conductor	Connected to	Pin	X-Ref
	/030.5	-030EA1	-OUT	**BN**	-030EA2	-IN:1	/030.7
	/030.5	-030EA1	-OUT	**BU**	-030EA2	-IN:2	/030.7
	/030.5	-030EA1	-OUT	**PE**	-030EA2	-IN:PE	/030.7

IK4 TEKNIKER Research Alliance

IK4-TEKNIKER
AVDA. OTAOLA 20
20600 Eibar (Gipuzkoa) Spain
Tfno.:(+34) 943 206744
Fax: (+34) 943 202757
Web: www.tekniker.es

Date	23/02/2017						
Reviewed	F.LÓPEZ	2.3	15/12/2017	JOSE MANUEL			
Drew by	jcastano	Review	Date	Name	Review	Date	Name

3151_LSST

MCS Design Electrical Schematics

LSST TELESCOPE

Replaces

Replaced by

Cable diagram
=E1+TMA-AZ-CS-CBT-0001-030W2

Customer:

EMPRESARIOS AGRUPADOS

C/Magallanes, 3
28015 MADRID
91 3098000

http://www.empresariosagrupados.es/

= REPORT

+ TMA-AZ-CS-CBT-0001

Cable diagram

F09_001_TK1

Cable ID	Cable Type	no. of conductors	cross-section	cable length	function text
=E1+TMA-AZ-CS-CBT-0001-101W1	JZ-602-CY 3G1	3	1		POWER CABINET MIXING VALVE

function text	X-Ref	Connected to	Pin	conductor	Connected to	Pin	X-Ref
Mixing Valve	/101.1	-X10	1	**1**	-101Y1	G	/101.1
=	/101.1	-X10	2	**2**	-101Y1	G0	/101.1
	/101.1	-PE	17	**GNYE**	-101Y1	PE	/101.1
POWER CABINET MIXING VALVE	/101.0	-101W1		**SH**	-101W1-SH		/101.1

IK4 TEKNIKER Research Alliance

IK4-TEKNIKER
AVDA. OTAOLA 20
20600 Eibar (Gipuzkoa) Spain
Tfno.:(+34) 943 206744
Fax: (+34) 943 202757
Web: www.tekniker.es

Date	23/02/2017						
Reviewed	F.LÓPEZ	2.3	15/12/2017	JOSE MANUEL			
Drew by	jcastano	Review	Date	Name	Review	Date	Name

3151_LSST

MCS Design Electrical Schematics

LSST TELESCOPE

Replaces

Replaced by

Cable diagram
=E1+TMA-AZ-CS-CBT-0001-101W1

Customer:

EMPRESARIOS AGRUPADOS

EMPRESARIOS AGRUPADOS
C/Magallanes, 3
28015 MADRID
91 3098000

http://www.empresariosagrupados.es/

= REPORT

+ TMA-AZ-CS-CBT-0001

Cable diagram

F09_001_TK1

Cable ID	Cable Type	no. of conductors	cross-section	cable length	function text
=E1+TMA-AZ-CS-CBT-0001-101W2	SUPERTRONIC ® 330-C-PURö 3x0,34 mm²	3	0,34		CABINET MIXING VALVE SETPOINT

function text	X-Ref	Connected to	Pin	conductor	Connected to	Pin	X-Ref
Mixing Valve	/101.2	-X10	3	**WH**	-101Y1	Y	/101.2
=	/101.2	-X10	4	**BN**	-101Y1	M	/101.2
=	/101.3	-X10	6	**GN**	-101Y1	U	/101.2
CABINET MIXING VALVE SETPOINT	/101.2	-101W2		**SH**	-101W2-SH		/101.3

IK4 TEKNIKER Research Alliance

IK4-TEKNIKER
AVDA. OTAOLA 20
20600 Eibar (Gipuzkoa) Spain
Tfno.:(+34) 943 206744
Fax: (+34) 943 202757
Web: www.tekniker.es

Date	23/02/2017						
Reviewed	F.LÓPEZ	2.3	15/12/2017	JOSE MANUEL			
Drew by	jcastano	Review	Date	Name	Review	Date	Name

3151_LSST

MCS Design Electrical Schematics

LSST TELESCOPE

Replaces

Replaced by

Cable diagram
=E1+TMA-AZ-CS-CBT-0001-101W2

Customer:

EMPRESARIOS AGRUPADOS

EMPRESARIOS AGRUPADOS
C/Magallanes, 3
28015 MADRID
91 3098000

http://www.empresariosagrupados.es/

= REPORT

+ TMA-AZ-CS-CBT-0001

Cable diagram

F09_001_TK1

Cable ID	Cable Type	no. of conductors	cross-section	cable length	function text
=E1+TMA-AZ-CS-CBT-0001-106W1	HAS01.1				HAS01 BUSBAR

function text	X-Ref	Connected to	Pin	conductor	Connected to	Pin	X-Ref
	/106.1	-105U1	XDC:L+	**L+**	-105U2	L+	/106.7
	/106.1	-105U1	XDC:L-	**L-**	-105U2	L-	/106.7
	/106.1	-105U1	XPE:PE'	**PE**	-105U2	GND	/106.7
	/106.4	-105U1	XCV:0V	**24V**	-105U2	24v	/106.8
	/106.4	-105U1	XCV:24V	**0V**	-105U2	0V	/106.8

IK4 TEKNIKER Research Alliance

IK4-TEKNIKER
AVDA. OTAOLA 20
20600 Eibar (Gipuzkoa) Spain
Tfno.:(+34) 943 206744
Fax: (+34) 943 202757
Web: www.tekniker.es

Date	23/02/2017						
Reviewed	F.LÓPEZ	2.3	15/12/2017	JOSE MANUEL			
Drew by	jcastano	Review	Date	Name	Review	Date	Name

3151_LSST

MCS Design Electrical Schematics

LSST TELESCOPE

Replaces

Replaced by

Cable diagram
=E1+TMA-AZ-CS-CBT-0001-106W1

Customer:

EMPRESARIOS AGRUPADOS

EMPRESARIOS AGRUPADOS
C/Magallanes, 3
28015 MADRID
91 3098000

http://www.empresariosagrupados.es/

= REPORT

+ TMA-AZ-CS-CBT-0001

Cable diagram

F09_001_TK1

Cable ID	Cable Type	no. of conductors	cross-section	cable length	function text
=E1+TMA-AZ-CS-CBT-0001-106W2	HAS01.1 BUSBAR				HAS01.1 BUSBAR

function text	X-Ref	Connected to	Pin	conductor	Connected to	Pin	X-Ref
	/106.7	-105U2	L+	**L+**	-105U3	XDC:L+	/108.1
	/106.7	-105U2	L-	**L-**	-105U3	XDC:L-	/108.2
	/106.8	-105U2	GND	**PE**	-105U3	XPE:PE	/108.2
	/106.8	-105U2	24v	**24V**	-105U3	XCV:+24V	/108.1
	/106.8	-105U2	0V	**0V**	-105U3	XCV:0V	/108.0

◁ 3009

3011 ▷

IK4-TEKNIKER
AVDA. OTAOLA 20
20600 Eibar (Gipuzkoa) Spain
Tfno.:(+34) 943 206744
Fax: (+34) 943 202757
Web: www.tekniker.es

Date	23/02/2017						
Reviewed	F.LÓPEZ	2.3	15/12/2017	JOSE MANUEL			
Drew by	jcastano	Review	Date	Name	Review	Date	Name

3151_LSST

MCS Design Electrical Schematics

LSST TELESCOPE

Replaces

Replaced by

Cable diagram
=E1+TMA-AZ-CS-CBT-0001-106W2

Customer:

EMPRESARIOS AGRUPADOS
C/Magallanes, 3
28015 MADRID
91 3098000

http://www.empresariosagrupados.es/

= REPORT

+ TMA-AZ-CS-CBT-0001

Cable diagram

F09_001_TK1

Cable ID	Cable Type	no. of conductors	cross-section	cable length	function text
=E1+TMA-AZ-CS-CBT-0001-108W3	HAS01.1 BUSBAR				HAS01.1 BUSBAR

function text	X-Ref	Connected to	Pin	conductor	Connected to	Pin	X-Ref
	/108.1	-105U3	XDC:L+'	**L+**	-105U4	XDC:L+	/112.1
	/108.2	-105U3	XDC:L-'	**L-**	-105U4	XDC:L-	/112.2
	/108.2	-105U3	XPE:PE'	**PE**	-105U4	XPE:PE	/112.2
	/108.1	-105U3	XCV:+24V'	**24V**	-105U4	XCV:+24V	/112.1
	/108.0	-105U3	XCV:0V'	**0V**	-105U4	XCV:0V	/112.0

IK4 TEKNIKER Research Alliance

IK4-TEKNIKER
AVDA. OTAOLA 20
20600 Eibar (Gipuzkoa) Spain
Tfno.:(+34) 943 206744
Fax: (+34) 943 202757
Web: www.tekniker.es

Date	23/02/2017						
Reviewed	F.LÓPEZ	2.3	15/12/2017	JOSE MANUEL			
Drew by	jcastano	Review	Date	Name	Review	Date	Name

3151_LSST

MCS Design Electrical Schematics

LSST TELESCOPE

Replaces

Replaced by

Cable diagram
=E1+TMA-AZ-CS-CBT-0001-108W3

Customer:

EMPRESARIOS AGRUPADOS

EMPRESARIOS AGRUPADOS
C/Magallanes, 3
28015 MADRID
91 3098000

http://www.empresariosagrupados.es/

= REPORT

+ TMA-AZ-CS-CBT-0001

Cable diagram

F09_001_TK1

Cable ID	Cable Type	no. of conductors	cross-section	cable length	function text
=E1+TMA-AZ-CS-CBT-0001-108W4	RD ETH CAT6	5	1	1,5	MULTI_ETH RED

function text	X-Ref	Connected to	Pin	conductor	Connected to	Pin	X-Ref
	/108.7	-105U3-X24	X49.1:1-8	**ETH**	-105U4-X25	X49.1:1-8	/112.6

IK4 TEKNIKER Research Alliance

IK4-TEKNIKER
AVDA. OTAOLA 20
20600 Eibar (Gipuzkoa) Spain
Tfno.:(+34) 943 206744
Fax: (+34) 943 202757
Web: www.tekniker.es

Date	23/02/2017						
Reviewed	F.LÓPEZ	2.3	15/12/2017	JOSE MANUEL			
Drew by	jcastano	Review	Date	Name	Review	Date	Name

3151_LSST

MCS Design Electrical Schematics

LSST TELESCOPE

Replaces

Replaced by

Cable diagram
=E1+TMA-AZ-CS-CBT-0001-108W4

Customer:

EMPRESARIOS AGRUPADOS

EMPRESARIOS AGRUPADOS
C/Magallanes, 3
28015 MADRID
91 3098000

http://www.empresariosagrupados.es/

= REPORT

+ TMA-AZ-CS-CBT-0001

Cable diagram

F09_001_TK1

Cable ID	Cable Type	no. of conductors	cross-section	cable length	function text
=E1+TMA-AZ-CS-CBT-0001-112W3	HAS01.1 BUSBAR				HAS01.1 BUSBAR

function text	X-Ref	Connected to	Pin	conductor	Connected to	Pin	X-Ref
	/112.1	-105U4	XDC:L+'	**L+**	-105U5-XDC	XDC:L+	/119.7
	/112.2	-105U4	XDC:L-'	**L-**	-105U5-XDC	XDC:L-	/119.7
	/112.2	-105U4	XPE:PE'	**PE**	-105U5-PE	XPE:1	/119.8
	/112.1	-105U4	XCV:+24V'	**24V**	-105U5-XCV	XCV:+24V	/119.6
	/112.0	-105U4	XCV:0V'	**0V**	-105U5-XCV	XCV:0V	/119.6

IK4 TEKNIKER Research Alliance

IK4-TEKNIKER
AVDA. OTAOLA 20
20600 Eibar (Gipuzkoa) Spain
Tfno.:(+34) 943 206744
Fax: (+34) 943 202757
Web: www.tekniker.es

Date	23/02/2017						
Reviewed	F.LÓPEZ	2.3	15/12/2017	JOSE MANUEL			
Drew by	jcastano	Review	Date	Name	Review	Date	Name

3151_LSST

MCS Design Electrical Schematics

LSST TELESCOPE

Replaces

Replaced by

Cable diagram
=E1+TMA-AZ-CS-CBT-0001-112W3

Customer:

EMPRESARIOS AGRUPADOS

EMPRESARIOS AGRUPADOS
C/Magallanes, 3
28015 MADRID
91 3098000

http://www.empresariosagrupados.es/

= REPORT

+ TMA-AZ-CS-CBT-0001

Cable diagram

F09_001_TK1

Cable ID	Cable Type	no. of conductors	cross-section	cable length	function text
=E1+TMA-AZ-CS-CBT-0001-112W4	RD ETH CAT6	5	1	1,5	MULTI_ETH RED

function text	X-Ref	Connected to	Pin	conductor	Connected to	Pin	X-Ref
	/119.0	-105U5	X29.1:1-8	**ETH**	-105U4-X24	X49.1:1-8	/112.7

IK4 TEKNIKER Research Alliance

IK4-TEKNIKER
AVDA. OTAOLA 20
20600 Eibar (Gipuzkoa) Spain
Tfno.:(+34) 943 206744
Fax: (+34) 943 202757
Web: www.tekniker.es

Date	23/02/2017						
Reviewed	F.LÓPEZ	2.3	15/12/2017	JOSE MANUEL			
Drew by	jcastano	Review	Date	Name	Review	Date	Name

3151_LSST

MCS Design Electrical Schematics

LSST TELESCOPE

Replaces

Replaced by

Cable diagram
=E1+TMA-AZ-CS-CBT-0001-112W4

Customer:

EMPRESARIOS AGRUPADOS

EMPRESARIOS AGRUPADOS
C/Magallanes, 3
28015 MADRID
91 3098000

http://www.empresariosagrupados.es/

= REPORT

+ TMA-AZ-CS-CBT-0001

Cable diagram

F09_001_TK1

Cable ID	Cable Type	no. of conductors	cross-section	cable length	function text
=E1+TMA-AZ-CS-CBT-0001-119W2	HAS01.1 BUSBAR				HAS01.1 BUSBAR

function text	X-Ref	Connected to	Pin	conductor	Connected to	Pin	X-Ref
	/119.7	-105U5-XDC	XDC:L+'	**L+**	-105U6-XDC	XDC:L+	/120.7
	/119.7	-105U5-XDC	XDC:L-'	**L-**	-105U6-XDC	XDC:L-	/120.7
	/119.8	-105U5-PE	XPE:2	**PE**	-105U6-PE	XPE:1	/120.8
	/119.6	-105U5-XCV	XCV:+24V'	**24V**	-105U6-XCV	XCV:+24V	/120.6
	/119.6	-105U5-XCV	XCV:0V'	**0V**	-105U6-XCV	XCV:0V	/120.6

IK4 TEKNIKER Research Alliance

IK4-TEKNIKER
AVDA. OTAOLA 20
20600 Eibar (Gipuzkoa) Spain
Tfno.:(+34) 943 206744
Fax: (+34) 943 202757
Web: www.tekniker.es

Date	23/02/2017						
Reviewed	F.LÓPEZ	2.3	15/12/2017	JOSE MANUEL			
Drew by	jcastano	Review	Date	Name	Review	Date	Name

3151_LSST

MCS Design Electrical Schematics

LSST TELESCOPE

Replaces

Replaced by

Cable diagram
=E1+TMA-AZ-CS-CBT-0001-119W2

Customer:

EMPRESARIOS AGRUPADOS

EMPRESARIOS AGRUPADOS
C/Magallanes, 3
28015 MADRID
91 3098000

http://www.empresariosagrupados.es/

= REPORT

+ TMA-AZ-CS-CBT-0001

Cable diagram

F09_001_TK1

Cable ID	Cable Type	no. of conductors	cross-section	cable length	function text
=E1+TMA-AZ-CS-CBT-0001-121W2	SAC-5P-MS SH SCO BK/.../...	2	1		Mirror Cover System 1 LIMIT SWITCH

function text	X-Ref	Connected to	Pin	conductor	Connected to	Pin	X-Ref
	/121.4	-121X1	1	**BN**	+TMA_E-121S1-S1	11	/121.5
	/121.5	-121X1	2	**WH**	+TMA_E-121S1-S1	12	/121.5
				BU			
	/121.5	-121X1	4	**BK**	+TMA_E-121S1-S2	12	/121.5
				GY			
	/121.5	-121X1	SH	**SH**	-121W2		/121.4

IK4 TEKNIKER Research Alliance

IK4-TEKNIKER
AVDA. OTAOLA 20
20600 Eibar (Gipuzkoa) Spain
Tfno.:(+34) 943 206744
Fax: (+34) 943 202757
Web: www.tekniker.es

Date	23/02/2017						
Reviewed	F.LÓPEZ	2.3	15/12/2017	JOSE MANUEL			
Drew by	jcastano	Review	Date	Name	Review	Date	Name

3151_LSST

MCS Design Electrical Schematics

LSST TELESCOPE

Replaces

Replaced by

Cable diagram
=E1+TMA-AZ-CS-CBT-0001-121W2

Customer:

EMPRESARIOS AGRUPADOS

EMPRESARIOS AGRUPADOS
C/Magallanes, 3
28015 MADRID
91 3098000

http://www.empresariosagrupados.es/

= REPORT

+ TMA-AZ-CS-CBT-0001

Cable diagram

F09_001_TK1

Cable ID	Cable Type	no. of conductors	cross-section	cable length	function text
=E1+TMA-AZ-CS-CBT-0001-124W2	SAC-5P-MS SH SCO BK/.../...	2	1		MIRROR COVER LOCK 1 LIMIT SWITCH

function text	X-Ref	Connected to	Pin	conductor	Connected to	Pin	X-Ref
	/124.4	-124X1	1	**BN**	+TMA_E-124S1-S1	11	/124.4
	/124.4	-124X1	2	**WH**	+TMA_E-124S1-S1	12	/124.4
				BU			
	/124.5	-124X1	4	**BK**	+TMA_E-124S1-S2	12	/124.5
				GY			
	/124.5	-124X1	SH	**SH**	-124W2		/124.4

IK4 TEKNIKER Research Alliance

IK4-TEKNIKER
AVDA. OTAOLA 20
20600 Eibar (Gipuzkoa) Spain
Tfno.:(+34) 943 206744
Fax: (+34) 943 202757
Web: www.tekniker.es

Date	23/02/2017						
Reviewed	F.LÓPEZ	2.3	15/12/2017	JOSE MANUEL			
Drew by	jcastano	Review	Date	Name	Review	Date	Name

3151_LSST — MCS Design Electrical Schematics

LSST TELESCOPE

Replaces — Replaced by

Cable diagram
=E1+TMA-AZ-CS-CBT-0001-124W2

Customer: EMPRESARIOS AGRUPADOS
C/Magallanes, 3
28015 MADRID
91 3098000
http://www.empresariosagrupados.es/

= REPORT
+ TMA-AZ-CS-CBT-0001

Cable diagram

F09_001_TK1

Cable ID	Cable Type	no. of conductors	cross-section	cable length	function text
=E1+TMA-AZ-CS-CBT-0001-125W2	SAC-5P-MS SH SCO BK/.../...	2	1		Mirror Cover System 2 LIMIT SWITCH

function text	X-Ref	Connected to	Pin	conductor	Connected to	Pin	X-Ref
	/125.4	-125X1	1	**BN**	+TMA_E-125S1-S1	11	/125.4
	/125.4	-125X1	2	**WH**	+TMA_E-125S1-S1	12	/125.4
				BU			
	/125.5	-125X1	4	**BK**	+TMA_E-125S1-S2	12	/125.5
				GY			
	/125.5	-125X1	SH	**SH**	-125W2		/125.4

◁ 3017

3019 ▷

IK4-TEKNIKER
AVDA. OTAOLA 20
20600 Eibar (Gipuzkoa) Spain
Tfno.:(+34) 943 206744
Fax: (+34) 943 202757
Web: www.tekniker.es

Date	23/02/2017						
Reviewed	F.LÓPEZ	2.3	15/12/2017	JOSE MANUEL			
Drew by	jcastano	Review	Date	Name	Review	Date	Name

3151_LSST

MCS Design Electrical Schematics

LSST TELESCOPE

Replaces

Replaced by

Cable diagram
=E1+TMA-AZ-CS-CBT-0001-125W2

Customer:

EMPRESARIOS AGRUPADOS
C/Magallanes, 3
28015 MADRID
91 3098000

http://www.empresariosagrupados.es/

= REPORT

+ TMA-AZ-CS-CBT-0001

Cable diagram

F09_001_TK1

Cable ID	Cable Type	no. of conductors	cross-section	cable length	function text
=E1+TMA-AZ-CS-CBT-0001-126W2	SAC-5P-MS SH SCO BK/.../...	2	1		MIRROR COVER LOCK 2 LIMIT SWITCH

function text	X-Ref	Connected to	Pin	conductor	Connected to	Pin	X-Ref
	/126.4	-126X1	1	**BN**	+TMA_E-126S1-S1	11	/126.4
	/126.4	-126X1	2	**WH**	+TMA_E-126S1-S1	12	/126.4
				BU			
	/126.5	-126X1	4	**BK**	+TMA_E-126S1-S2	12	/126.5
				GY			
	/126.5	-126X1	SH	**SH**	-126W2		/126.4

IK4 TEKNIKER Research Alliance

IK4-TEKNIKER
AVDA. OTAOLA 20
20600 Eibar (Gipuzkoa) Spain
Tfno.:(+34) 943 206744
Fax: (+34) 943 202757
Web: www.tekniker.es

Date	23/02/2017						
Reviewed	F.LÓPEZ	2.3	15/12/2017	JOSE MANUEL			
Drew by	jcastano	Review	Date	Name	Review	Date	Name

3151_LSST

MCS Design Electrical Schematics

LSST TELESCOPE

Replaces

Replaced by

Cable diagram
=E1+TMA-AZ-CS-CBT-0001-126W2

Customer:

EMPRESARIOS AGRUPADOS

C/Magallanes, 3
28015 MADRID
91 3098000

http://www.empresariosagrupados.es/

= REPORT

+ TMA-AZ-CS-CBT-0001

Cable diagram

F09_001_TK1

Cable ID	Cable Type	no. of conductors	cross-section	cable length	function text
=E1+TMA-AZ-CS-CBT-0001-202W1					PXI POWER 1

function text	X-Ref	Connected to	Pin	conductor	Connected to	Pin	X-Ref
230v 50Hz TEMPERATURE OK	/202.1	-202XJ2	1	**L1**	-201X1-PWR1	L	/202.1
=	/202.1	-202XJ2	2	**N**	-201X1-PWR1	N	/202.1
=	/202.1	-202XJ2	PE	**PE**	-201X1-PWR1	PE	/202.1

IK4 TEKNIKER Research Alliance

IK4-TEKNIKER
AVDA. OTAOLA 20
20600 Eibar (Gipuzkoa) Spain
Tfno.:(+34) 943 206744
Fax: (+34) 943 202757
Web: www.tekniker.es

Date	23/02/2017						
Reviewed	F.LÓPEZ	2.3	15/12/2017	JOSE MANUEL			
Drew by	jcastano	Review	Date	Name	Review	Date	Name

3151_LSST

MCS Design Electrical Schematics

LSST TELESCOPE

Replaces

Replaced by

Cable diagram
=E1+TMA-AZ-CS-CBT-0001-202W1

Customer:

EMPRESARIOS AGRUPADOS

EMPRESARIOS AGRUPADOS
C/Magallanes, 3
28015 MADRID
91 3098000

http://www.empresariosagrupados.es/

= REPORT

+ TMA-AZ-CS-CBT-0001

Cable diagram

F09_001_TK1

Cable ID	Cable Type	no. of conductors	cross-section	cable length	function text
=E1+TMA-AZ-CS-CBT-0001-202W2					PXI POWER 2

function text	X-Ref	Connected to	Pin	conductor	Connected to	Pin	X-Ref
230v 50Hz	/202.2	-202XJ4	1	**L1**	-201X1-PWR2	L	/202.2
=	/202.2	-202XJ4	2	**N**	-201X1-PWR2	N	/202.2
=	/202.3	-202XJ4	PE	**PE**	-201X1-PWR2	PE	/202.3

IK4 TEKNIKER Research Alliance

IK4-TEKNIKER
AVDA. OTAOLA 20
20600 Eibar (Gipuzkoa) Spain
Tfno.:(+34) 943 206744
Fax: (+34) 943 202757
Web: www.tekniker.es

Date	23/02/2017						
Reviewed	F.LÓPEZ	2.3	15/12/2017	JOSE MANUEL			
Drew by	jcastano	Review	Date	Name	Review	Date	Name

3151_LSST

MCS Design Electrical Schematics

LSST TELESCOPE

Replaces

Replaced by

Cable diagram
=E1+TMA-AZ-CS-CBT-0001-202W2

Customer:

EMPRESARIOS AGRUPADOS

C/Magallanes, 3
28015 MADRID
91 3098000

http://www.empresariosagrupados.es/

= REPORT

+ TMA-AZ-CS-CBT-0001

Cable diagram

F09_001_TK1

Cable ID	Cable Type	no. of conductors	cross-section	cable length	function text
=E1+TMA-AZ-CS-CBT-0001-205W1	WH ETH CAT6	5	1	2,1	EIB ETHERNET WH

function text	X-Ref	Connected to	Pin	conductor	Connected to	Pin	X-Ref
	/205.0	-201A3-ETH1		**ETH**	-240U1-ETH		/272.9

IK4 TEKNIKER Research Alliance

IK4-TEKNIKER
AVDA. OTAOLA 20
20600 Eibar (Gipuzkoa) Spain
Tfno.:(+34) 943 206744
Fax: (+34) 943 202757
Web: www.tekniker.es

Date	23/02/2017						
Reviewed	F.LÓPEZ	2.3	15/12/2017	JOSE MANUEL			
Drew by	jcastano	Review	Date	Name	Review	Date	Name

3151_LSST

MCS Design Electrical Schematics

LSST TELESCOPE

Replaces

Replaced by

Cable diagram
=E1+TMA-AZ-CS-CBT-0001-205W1

Customer:

EMPRESARIOS AGRUPADOS

C/Magallanes, 3
28015 MADRID
91 3098000

http://www.empresariosagrupados.es/

= REPORT

+ TMA-AZ-CS-CBT-0001

Cable diagram

F09_001_TK1

Cable ID	Cable Type	no. of conductors	cross-section	cable length	function text
=E1+TMA-AZ-CS-CBT-0001-205W2	BL ETH CAT6	5	1	2,1	ETHERCAT RING2 BLUE

function text	X-Ref	Connected to	Pin	conductor	Connected to	Pin	X-Ref
	/205.4	-201A4-ETH2		**ETH**	-220A1	X1:ETH1	/221.4

IK4 TEKNIKER Research Alliance

IK4-TEKNIKER
AVDA. OTAOLA 20
20600 Eibar (Gipuzkoa) Spain
Tfno.:(+34) 943 206744
Fax: (+34) 943 202757
Web: www.tekniker.es

Date	23/02/2017						
Reviewed	F.LÓPEZ	2.3	15/12/2017	JOSE MANUEL			
Drew by	jcastano	Review	Date	Name	Review	Date	Name

3151_LSST

MCS Design Electrical Schematics

LSST TELESCOPE

Replaces

Replaced by

Cable diagram
=E1+TMA-AZ-CS-CBT-0001-205W2

Customer:

EMPRESARIOS AGRUPADOS

C/Magallanes, 3
28015 MADRID
91 3098000

http://www.empresariosagrupados.es/

= REPORT

+ TMA-AZ-CS-CBT-0001

Cable diagram

F09_001_TK1

Cable ID	Cable Type	no. of conductors	cross-section	cable length	function text
=E1+TMA-AZ-CS-CBT-0001-205W3	WH ETH CAT6	5	1	2,1	ETH MLC WHITE

function text	X-Ref	Connected to	Pin	conductor	Connected to	Pin	X-Ref
	/205.8	-201A6-ETH1		**ETH**	-209A1	X7E5:1-8	/209.7

IK4 TEKNIKER Research Alliance

IK4-TEKNIKER
AVDA. OTAOLA 20
20600 Eibar (Gipuzkoa) Spain
Tfno.:(+34) 943 206744
Fax: (+34) 943 202757
Web: www.tekniker.es

Date	23/02/2017						
Reviewed	F.LÓPEZ	2.3	15/12/2017	JOSE MANUEL			
Drew by	jcastano	Review	Date	Name	Review	Date	Name

3151_LSST

MCS Design Electrical Schematics

LSST TELESCOPE

Replaces

Replaced by

Cable diagram
=E1+TMA-AZ-CS-CBT-0001-205W3

Customer:

EMPRESARIOS AGRUPADOS

C/Magallanes, 3
28015 MADRID
91 3098000

http://www.empresariosagrupados.es/

= REPORT

+ TMA-AZ-CS-CBT-0001

Cable diagram

F09_001_TK1

Cable ID	Cable Type	no. of conductors	cross-section	cable length	function text
=E1+TMA-AZ-CS-CBT-0001-205W4	WH ETH CAT6	5	1	2,1	ETH PILZ WHITE

function text	X-Ref	Connected to	Pin	conductor	Connected to	Pin	X-Ref
	/205.9	-201A6-ETH2		**ETH**	-500A1	-X3	/501.0

IK4 TEKNIKER Research Alliance

IK4-TEKNIKER
AVDA. OTAOLA 20
20600 Eibar (Gipuzkoa) Spain
Tfno.:(+34) 943 206744
Fax: (+34) 943 202757
Web: www.tekniker.es

Date	23/02/2017						
Reviewed	F.LÓPEZ	2.3	15/12/2017	JOSE MANUEL			
Drew by	jcastano	Review	Date	Name	Review	Date	Name

3151_LSST

MCS Design Electrical Schematics

LSST TELESCOPE

Replaces

Replaced by

Cable diagram
=E1+TMA-AZ-CS-CBT-0001-205W4

Customer:

EMPRESARIOS AGRUPADOS

EMPRESARIOS AGRUPADOS
C/Magallanes, 3
28015 MADRID
91 3098000

http://www.empresariosagrupados.es/

= REPORT

+ TMA-AZ-CS-CBT-0001

Cable diagram

F09_001_TK1

Cable ID	Cable Type	no. of conductors	cross-section	cable length	function text
=E1+TMA-AZ-CS-CBT-0001-206W1	WH ETH CAT6	5	1	3	ETHERNET PXI 1G

function text	X-Ref	Connected to	Pin	conductor	Connected to	Pin	X-Ref
	/203.2	-201A1-ETH2		**ETH**	-206A1-DP2	ETH	/206.4

IK4 TEKNIKER Research Alliance

IK4-TEKNIKER
AVDA. OTAOLA 20
20600 Eibar (Gipuzkoa) Spain
Tfno.:(+34) 943 206744
Fax: (+34) 943 202757
Web: www.tekniker.es

Date	23/02/2017						
Reviewed	F.LÓPEZ	2.3	15/12/2017	JOSE MANUEL			
Drew by	jcastano	Review	Date	Name	Review	Date	Name

3151_LSST

MCS Design Electrical Schematics

LSST TELESCOPE

Replaces

Replaced by

Cable diagram
=E1+TMA-AZ-CS-CBT-0001-206W1

Customer:
EMPRESARIOS AGRUPADOS
C/Magallanes, 3
28015 MADRID
91 3098000
http://www.empresariosagrupados.es/

= REPORT

+ TMA-AZ-CS-CBT-0001

Cable diagram

F09_001_TK1

Cable ID	Cable Type	no. of conductors	cross-section	cable length	function text
=E1+TMA-AZ-CS-CBT-0001-206W2	WH ETH CAT6	5	1	3	ETHERNET PXI 100M WH

function text	X-Ref	Connected to	Pin	conductor	Connected to	Pin	X-Ref
	/205.1	-201A3-ETH2		**ETH**	-206A1-ETH	3	/206.7

◁ 3026

3028 ▷

IK4-TEKNIKER
AVDA. OTAOLA 20
20600 Eibar (Gipuzkoa) Spain
Tfno.:(+34) 943 206744
Fax: (+34) 943 202757
Web: www.tekniker.es

Date	23/02/2017						
Reviewed	F.LÓPEZ	2.3	15/12/2017	JOSE MANUEL			
Drew by	jcastano	Review	Date	Name	Review	Date	Name

3151_LSST

MCS Design Electrical Schematics

LSST TELESCOPE

Replaces

Replaced by

Cable diagram
=E1+TMA-AZ-CS-CBT-0001-206W2

Customer:

EMPRESARIOS AGRUPADOS
C/Magallanes, 3
28015 MADRID
91 3098000

http://www.empresariosagrupados.es/

= REPORT

+ TMA-AZ-CS-CBT-0001

Cable diagram

F09_001_TK1

Cable ID	Cable Type	no. of conductors	cross-section	cable length	function text
=E1+TMA-AZ-CS-CBT-0001-206W3	WH ETH CAT6	5	1	2,1	ETHERNET RMA WH

function text	X-Ref	Connected to	Pin	conductor	Connected to	Pin	X-Ref
				ETH			

IK4 TEKNIKER Research Alliance

IK4-TEKNIKER
AVDA. OTAOLA 20
20600 Eibar (Gipuzkoa) Spain
Tfno.:(+34) 943 206744
Fax: (+34) 943 202757
Web: www.tekniker.es

Date	23/02/2017						
Reviewed	F.LÓPEZ	2.3	15/12/2017	JOSE MANUEL			
Drew by	jcastano	Review	Date	Name	Review	Date	Name

3151_LSST

MCS Design Electrical Schematics

LSST TELESCOPE

Replaces

Replaced by

Cable diagram
=E1+TMA-AZ-CS-CBT-0001-206W3

Customer:

EMPRESARIOS AGRUPADOS

C/Magallanes, 3
28015 MADRID
91 3098000

http://www.empresariosagrupados.es/

= REPORT

+ TMA-AZ-CS-CBT-0001

Cable diagram

F09_001_TK1

Cable ID	Cable Type	no. of conductors	cross-section	cable length	function text
=E1+TMA-AZ-CS-CBT-0001-206W5	ETH CAT6	5	1		PXI CHASIS

function text	X-Ref	Connected to	Pin	conductor	Connected to	Pin	X-Ref
	/202.8	-201X1-ETH		**ETH**	-206A2-ETH	3	/206.a.4

IK4 TEKNIKER Research Alliance

IK4-TEKNIKER
AVDA. OTAOLA 20
20600 Eibar (Gipuzkoa) Spain
Tfno.:(+34) 943 206744
Fax: (+34) 943 202757
Web: www.tekniker.es

Date	23/02/2017						
Reviewed	F.LÓPEZ	2.3	15/12/2017	JOSE MANUEL			
Drew by	jcastano	Review	Date	Name	Review	Date	Name

3151_LSST

MCS Design Electrical Schematics

LSST TELESCOPE

Replaces

Replaced by

Cable diagram
=E1+TMA-AZ-CS-CBT-0001-206W5

Customer:

EMPRESARIOS AGRUPADOS

C/Magallanes, 3
28015 MADRID
91 3098000

http://www.empresariosagrupados.es/

= REPORT

+ TMA-AZ-CS-CBT-0001

Cable diagram

F09_001_TK1

Cable ID	Cable Type	no. of conductors	cross-section	cable length	function text
=E1+TMA-AZ-CS-CBT-0001-209W1	RD ETH CAT6	5	1	2,1	MULTI_ETH RED

function text	X-Ref	Connected to	Pin	conductor	Connected to	Pin	X-Ref
	/108.6	-105U3-X25	X49.1:1-8	**ETH**	-209A1	X7E1:1-8	/209.1

IK4 TEKNIKER Research Alliance

IK4-TEKNIKER
AVDA. OTAOLA 20
20600 Eibar (Gipuzkoa) Spain
Tfno.:(+34) 943 206744
Fax: (+34) 943 202757
Web: www.tekniker.es

Date	23/02/2017						
Reviewed	F.LÓPEZ	2.3	15/12/2017	JOSE MANUEL			
Drew by	jcastano	Review	Date	Name	Review	Date	Name

3151_LSST

MCS Design Electrical Schematics

LSST TELESCOPE

Replaces

Replaced by

Cable diagram
=E1+TMA-AZ-CS-CBT-0001-209W1

Customer:
EMPRESARIOS AGRUPADOS
C/Magallanes, 3
28015 MADRID
91 3098000
http://www.empresariosagrupados.es/

= REPORT

+ TMA-AZ-CS-CBT-0001

Cable diagram

F09_001_TK1

Cable ID	Cable Type	no. of conductors	cross-section	cable length	function text
=E1+TMA-AZ-CS-CBT-0001-211W1	BL ETH CAT6	5	1	2,1	ETHERCAT RING1 BLUE

function text	X-Ref	Connected to	Pin	conductor	Connected to	Pin	X-Ref
	/205.6	-201A5-ETH2		**ETH**	-210A1-ETH	POWER:OUT	/211.5

IK4 TEKNIKER Research Alliance

IK4-TEKNIKER
AVDA. OTAOLA 20
20600 Eibar (Gipuzkoa) Spain
Tfno.:(+34) 943 206744
Fax: (+34) 943 202757
Web: www.tekniker.es

Date	23/02/2017						
Reviewed	F.LÓPEZ	2.3	15/12/2017	JOSE MANUEL			
Drew by	jcastano	Review	Date	Name	Review	Date	Name

3151_LSST

MCS Design Electrical Schematics

LSST TELESCOPE

Replaces

Replaced by

Cable diagram
=E1+TMA-AZ-CS-CBT-0001-211W1

Customer:

EMPRESARIOS AGRUPADOS

EMPRESARIOS AGRUPADOS
C/Magallanes, 3
28015 MADRID
91 3098000

http://www.empresariosagrupados.es/

= REPORT

+ TMA-AZ-CS-CBT-0001

Cable diagram

F09_001_TK1

Cable ID	Cable Type	no. of conductors	cross-section	cable length	function text
=E1+TMA-AZ-CS-CBT-0001-212W2	SUPER-PAAR-TRONIC 340-C-PUR 1x2x0,34 mm²	2	0,34		EIB SYNC SIGNAL

function text	X-Ref	Connected to	Pin	conductor	Connected to	Pin	X-Ref
	/212.0	-212X1	14	**WH**	-241X3	1	/271.4
	/212.1	-212X1	1	**BN**	-241X3	6	/271.5
EIB SYNC SIGNAL	/212.0	-212W2		**SH**	-241X3	5	/271.6

IK4 TEKNIKER Research Alliance

IK4-TEKNIKER
AVDA. OTAOLA 20
20600 Eibar (Gipuzkoa) Spain
Tfno.:(+34) 943 206744
Fax: (+34) 943 202757
Web: www.tekniker.es

Date	23/02/2017						
Reviewed	F.LÓPEZ	2.3	15/12/2017	JOSE MANUEL			
Drew by	jcastano	Review	Date	Name	Review	Date	Name

3151_LSST

MCS Design Electrical Schematics

LSST TELESCOPE

Replaces

Replaced by

Cable diagram
=E1+TMA-AZ-CS-CBT-0001-212W2

Customer:

EMPRESARIOS AGRUPADOS

EMPRESARIOS AGRUPADOS
C/Magallanes, 3
28015 MADRID
91 3098000

http://www.empresariosagrupados.es/

= REPORT

+ TMA-AZ-CS-CBT-0001

Cable diagram

F09_001_TK1

Cable ID	Cable Type	no. of conductors	cross-section	cable length	function text
=E1+TMA-AZ-CS-CBT-0001-212W3	SUPER-PAAR-TRONIC 340-C-PUR 1x2x0,34 mm²	2	0,34		EIB RESET SIGNAL

function text	X-Ref	Connected to	Pin	conductor	Connected to	Pin	X-Ref
	/212.3	-212X1	17	**WH**	-272X1	12	/272.5
	/212.3	-212X1	4	**BN**	-272X1	25	/272.5
EIB RESET SIGNAL	/212.3	-212W3		**SH**	-272X1	PE	/272.5

IK4 TEKNIKER Research Alliance

IK4-TEKNIKER
AVDA. OTAOLA 20
20600 Eibar (Gipuzkoa) Spain
Tfno.:(+34) 943 206744
Fax: (+34) 943 202757
Web: www.tekniker.es

Date	23/02/2017						
Reviewed	F.LÓPEZ	2.3	15/12/2017	JOSE MANUEL			
Drew by	jcastano	Review	Date	Name	Review	Date	Name

3151_LSST

MCS Design Electrical Schematics

LSST TELESCOPE

Replaces

Replaced by

Cable diagram
=E1+TMA-AZ-CS-CBT-0001-212W3

Customer:

EMPRESARIOS AGRUPADOS

EMPRESARIOS AGRUPADOS
C/Magallanes, 3
28015 MADRID
91 3098000

http://www.empresariosagrupados.es/

= REPORT

+ TMA-AZ-CS-CBT-0001

Cable diagram

F09_001_TK1

Cable ID	Cable Type	no. of conductors	cross-section	cable length	function text
=E1+TMA-AZ-CS-CBT-0001-233W1	SUPER-PAAR-TRONIC 340-C-PUR 1x2x0,34 mm²	2	0,34		AZCW LVDT

function text	X-Ref	Connected to	Pin	conductor	Connected to	Pin	X-Ref
LVDT AZIMUTH CABLE WRAP	/330.2	-X10	54	**WH**	-220A30	1:00	/233.1
=	/330.2	-X10	56	**BN**	-220A30	1:10	/233.2
AZCW LVDT	/233.1	-233W1		**SH**	-233W1-SH		/233.2

IK4 TEKNIKER Research Alliance

IK4-TEKNIKER
AVDA. OTAOLA 20
20600 Eibar (Gipuzkoa) Spain
Tfno.:(+34) 943 206744
Fax: (+34) 943 202757
Web: www.tekniker.es

Date	23/02/2017						
Reviewed	F.LÓPEZ	2.3	15/12/2017	JOSE MANUEL			
Drew by	jcastano	Review	Date	Name	Review	Date	Name

3151_LSST — MCS Design Electrical Schematics

LSST TELESCOPE

Replaces — Replaced by

Cable diagram
=E1+TMA-AZ-CS-CBT-0001-233W1

Customer: EMPRESARIOS AGRUPADOS
C/Magallanes, 3
28015 MADRID
91 3098000
http://www.empresariosagrupados.es/

= REPORT
+ TMA-AZ-CS-CBT-0001

Cable diagram

F09_001_TK1

Cable ID	Cable Type	no. of conductors	cross-section	cable length	function text
=E1+TMA-AZ-CS-CBT-0001-233W2	SUPER-PAAR-TRONIC 340-C-PUR 1x2x0,34 mm²	2	0,34		AZCW+ COOLING CIRCUIT IN PRESSURE

function text	X-Ref	Connected to	Pin	conductor	Connected to	Pin	X-Ref
AZCW+ COOLING CIRCUIT IN PRESSURE	/335.1	-X12	1.C	**WH**	-220A30	1:21	/233.2
=	/335.1	-X12	1.B	**BN**	-220A30	1:31	/233.2
AZCW+ COOLING CIRCUIT IN PRESSURE	/233.2	-233W2		**SH**	-233W2-SH		/233.3

IK4 TEKNIKER Research Alliance

IK4-TEKNIKER
AVDA. OTAOLA 20
20600 Eibar (Gipuzkoa) Spain
Tfno.:(+34) 943 206744
Fax: (+34) 943 202757
Web: www.tekniker.es

Date	23/02/2017						
Reviewed	F.LÓPEZ	2.3	15/12/2017	JOSE MANUEL			
Drew by	jcastano	Review	Date	Name	Review	Date	Name

3151_LSST

MCS Design Electrical Schematics

LSST TELESCOPE

Replaces

Replaced by

Cable diagram
=E1+TMA-AZ-CS-CBT-0001-233W2

Customer:

EMPRESARIOS AGRUPADOS

EMPRESARIOS AGRUPADOS
C/Magallanes, 3
28015 MADRID
91 3098000

http://www.empresariosagrupados.es/

= REPORT

+ TMA-AZ-CS-CBT-0001

Cable diagram

F09_001_TK1

Cable ID	Cable Type	no. of conductors	cross-section	cable length	function text
=E1+TMA-AZ-CS-CBT-0001-233W3	SUPER-PAAR-TRONIC 340-C-PUR 1x2x0,34 mm²	2	0,34		AZCW+ COOLING CIRCUIT OUT PRESSURE

function text	X-Ref	Connected to	Pin	conductor	Connected to	Pin	X-Ref
AZCW+ COOLING CIRCUIT OUT PRESSURE	/335.4	-X12	2.C	**WH**	-220A30	2:22	/233.3
=	/335.4	-X12	2.B	**BN**	-220A30	2:32	/233.3
AZCW+ COOLING CIRCUIT OUT PRESSURE	/233.3	-233W3		**SH**	-233W3-SH		/233.4

IK4 TEKNIKER Research Alliance

IK4-TEKNIKER
AVDA. OTAOLA 20
20600 Eibar (Gipuzkoa) Spain
Tfno.:(+34) 943 206744
Fax: (+34) 943 202757
Web: www.tekniker.es

Date	23/02/2017						
Reviewed	F.LÓPEZ	2.3	15/12/2017	JOSE MANUEL			
Drew by	jcastano	Review	Date	Name	Review	Date	Name

3151_LSST

MCS Design Electrical Schematics

LSST TELESCOPE

Replaces

Replaced by

Cable diagram
=E1+TMA-AZ-CS-CBT-0001-233W3

Customer:

EMPRESARIOS AGRUPADOS

EMPRESARIOS AGRUPADOS
C/Magallanes, 3
28015 MADRID
91 3098000

http://www.empresariosagrupados.es/

= REPORT

+ TMA-AZ-CS-CBT-0001

Cable diagram

F09_001_TK1

Cable ID	Cable Type	no. of conductors	cross-section	cable length	function text
=E1+TMA-AZ-CS-CBT-0001-233W4	SUPER-PAAR-TRONIC 340-C-PUR 1x2x0,34 mm²	2	0,34		DRIVER AZ1-8 COOLING CIRCUIT OUT PRESSURE

function text	X-Ref	Connected to	Pin	conductor	Connected to	Pin	X-Ref
AZ 1-8 DRIVERS COOLING CIRCUIT OUT PRESSURE	/336.1	-X12	3.C	**WH**	-220A30	2:23	/233.4
=	/336.1	-X12	3.B	**BN**	-220A30	2:33	/233.4
DRIVER AZ1-8 COOLING CIRCUIT OUT PRESSURE	/233.4	-233W4		**SH**	-233W4-SH		/233.4

◁ 3036

3038 ▷

IK4-TEKNIKER
AVDA. OTAOLA 20
20600 Eibar (Gipuzkoa) Spain
Tfno.:(+34) 943 206744
Fax: (+34) 943 202757
Web: www.tekniker.es

Date	23/02/2017						
Reviewed	F.LÓPEZ	2.3	15/12/2017	JOSE MANUEL			
Drew by	jcastano	Review	Date	Name	Review	Date	Name

3151_LSST

MCS Design Electrical Schematics

LSST TELESCOPE

Replaces

Replaced by

Cable diagram
=E1+TMA-AZ-CS-CBT-0001-233W4

Customer:

EMPRESARIOS AGRUPADOS
C/Magallanes, 3
28015 MADRID
91 3098000

http://www.empresariosagrupados.es/

= REPORT

+ TMA-AZ-CS-CBT-0001

Cable diagram

F09_001_TK1

Cable ID	Cable Type	no. of conductors	cross-section	cable length	function text
=E1+TMA-AZ-CS-CBT-0001-233W5	SUPER-PAAR-TRONIC 340-C-PUR 1x2x0,34 mm²	2	0,34		DRIVER AZ3-4 COOLING CIRCUIT OUT PRESSURE

function text	X-Ref	Connected to	Pin	conductor	Connected to	Pin	X-Ref
OSS AZIMUTH IO CABINET OUTLET PRESSURE +X	/336.3	-X12	4.C	**WH**	-220A30	3:24	/233.5
=	/336.3	-X12	4.B	**BN**	-220A30	3:34	/233.5
DRIVER AZ3-4 COOLING CIRCUIT OUT PRESSURE	/233.5	-233W5		**SH**	-233W5-SH		/233.5

◁ 3037

3039 ▷

IK4 TEKNIKER Research Alliance
IK4-TEKNIKER
AVDA. OTAOLA 20
20600 Eibar (Gipuzkoa) Spain
Tfno.:(+34) 943 206744
Fax: (+34) 943 202757
Web: www.tekniker.es

Date	23/02/2017						
Reviewed	F.LÓPEZ	2.3	15/12/2017	JOSE MANUEL			
Drew by	jcastano	Review	Date	Name	Review	Date	Name

3151_LSST
MCS Design Electrical Schematics
LSST TELESCOPE

Replaces | Replaced by

Cable diagram
=E1+TMA-AZ-CS-CBT-0001-233W5

Customer: EMPRESARIOS AGRUPADOS
C/Magallanes, 3
28015 MADRID
91 3098000
http://www.empresariosagrupados.es/

= REPORT
+ TMA-AZ-CS-CBT-0001

Cable diagram

F09_001_TK1

Cable ID	Cable Type	no. of conductors	cross-section	cable length	function text
=E1+TMA-AZ-CS-CBT-0001-233W6	SUPER-PAAR-TRONIC 340-C-PUR 1x2x0,34 mm²	2	0,34		OSS ELEVATION IO CABINET OUTLET PRESSURE +X

function text	X-Ref	Connected to	Pin	conductor	Connected to	Pin	X-Ref
OSS ELEVATION IO CABINET OUTLET PRESSURE +X	/336.5	-X12	5.C	**WH**	-220A30	3:25	/233.6
=	/336.5	-X12	5.B	**BN**	-220A30	3:35	/233.6
=	/233.5	-233W6		**SH**	-233W6-SH		/233.6

◁ 3038

3040 ▷

IK4-TEKNIKER
AVDA. OTAOLA 20
20600 Eibar (Gipuzkoa) Spain
Tfno.:(+34) 943 206744
Fax: (+34) 943 202757
Web: www.tekniker.es

Date	23/02/2017						
Reviewed	F.LÓPEZ	2.3	15/12/2017	JOSE MANUEL			
Drew by	jcastano	Review	Date	Name	Review	Date	Name

3151_LSST

MCS Design Electrical Schematics

LSST TELESCOPE

Replaces

Replaced by

Cable diagram
=E1+TMA-AZ-CS-CBT-0001-233W6

Customer:

EMPRESARIOS AGRUPADOS
C/Magallanes, 3
28015 MADRID
91 3098000
http://www.empresariosagrupados.es/

= REPORT

+ TMA-AZ-CS-CBT-0001

Cable diagram

F09_001_TK1

Cable ID	Cable Type	no. of conductors	cross-section	cable length	function text
=E1+TMA-AZ-CS-CBT-0001-233W8	SUPER-PAAR-TRONIC 340-C-PUR 1x2x0,34 mm²	2	0,34		AZ 9-16 DRIVERS COOLING CIRCUIT OUT PRESSURE

function text	X-Ref	Connected to	Pin	conductor	Connected to	Pin	X-Ref
AZ 9-16 DRIVERS COOLING CIRCUIT OUT PRESSURE	/337.1	-X12	7.C	**WH**	-220A30	4:27	/233.7
=	/337.1	-X12	7.B	**BN**	-220A30	4:37	/233.8
AZ 9-16 DRIVERS COOLING CIRCUIT OUT PRESSURE	/233.7	-233W8		**SH**	-233W8-SH		/233.8

◁ 3039

3041 ▷

IK4-TEKNIKER
AVDA. OTAOLA 20
20600 Eibar (Gipuzkoa) Spain
Tfno.:(+34) 943 206744
Fax: (+34) 943 202757
Web: www.tekniker.es

Date	23/02/2017						
Reviewed	F.LÓPEZ	2.3	15/12/2017	JOSE MANUEL			
Drew by	jcastano	Review	Date	Name	Review	Date	Name

3151_LSST

MCS Design Electrical Schematics

LSST TELESCOPE

Replaces

Replaced by

Cable diagram
=E1+TMA-AZ-CS-CBT-0001-233W8

Customer:

EMPRESARIOS AGRUPADOS
C/Magallanes, 3
28015 MADRID
91 3098000

http://www.empresariosagrupados.es/

= REPORT

+ TMA-AZ-CS-CBT-0001

Cable diagram

F09_001_TK1

Cable ID	Cable Type	no. of conductors	cross-section	cable length	function text
=E1+TMA-AZ-CS-CBT-0001-234W1	SUPER-PAAR-TRONIC 340-C-PUR 1x2x0,34 mm²	2	0,34		COMPRESORS MODULE COOLING CIRCUIT OUT PRESSURE

function text	X-Ref	Connected to	Pin	conductor	Connected to	Pin	X-Ref
COMPRESORS MODULE COOLING CIRCUIT OUT PRESSURE	/337.3	-X12	8.C	**WH**	-220A31	1:20	/234.1
=	/337.3	-X12	8.B	**BN**	-220A31	1:30	/234.2
=	/234.1	-234W1		**SH**	-234W1-SH		/234.2

◁ 3040

3042 ▷

IK4-TEKNIKER
AVDA. OTAOLA 20
20600 Eibar (Gipuzkoa) Spain
Tfno.:(+34) 943 206744
Fax: (+34) 943 202757
Web: www.tekniker.es

Date	23/02/2017						
Reviewed	F.LÓPEZ	2.3	15/12/2017	JOSE MANUEL			
Drew by	jcastano	Review	Date	Name	Review	Date	Name

3151_LSST

MCS Design Electrical Schematics

LSST TELESCOPE

Replaces

Replaced by

Cable diagram
=E1+TMA-AZ-CS-CBT-0001-234W1

Customer:

EMPRESARIOS AGRUPADOS
C/Magallanes, 3
28015 MADRID
91 3098000

http://www.empresariosagrupados.es/

= REPORT

+ TMA-AZ-CS-CBT-0001

Cable diagram

F09_001_TK1

Cable ID	Cable Type	no. of conductors	cross-section	cable length	function text
=E1+TMA-AZ-CS-CBT-0001-234W2	SUPER-PAAR-TRONIC 340-C-PUR 1x2x0,34 mm²	2	0,34		AZ DYNALEN SUPPLY PRESSURE

function text	X-Ref	Connected to	Pin	conductor	Connected to	Pin	X-Ref
AZ DYNALEN SUPPLY PRESSURE	/337.5	-X12	9.C	**WH**	-220A31	1:21	/234.2
=	/337.5	-X12	9.B	**BN**	-220A31	1:31	/234.3
=	/234.2	-234W2		**SH**	-234W2-SH		/234.3

IK4 TEKNIKER Research Alliance

IK4-TEKNIKER
AVDA. OTAOLA 20
20600 Eibar (Gipuzkoa) Spain
Tfno.:(+34) 943 206744
Fax: (+34) 943 202757
Web: www.tekniker.es

Date	23/02/2017						
Reviewed	F.LÓPEZ	2.3	15/12/2017	JOSE MANUEL			
Drew by	jcastano	Review	Date	Name	Review	Date	Name

3151_LSST

MCS Design Electrical Schematics

LSST TELESCOPE

Replaces

Replaced by

Cable diagram
=E1+TMA-AZ-CS-CBT-0001-234W2

Customer:

EMPRESARIOS AGRUPADOS

EMPRESARIOS AGRUPADOS
C/Magallanes, 3
28015 MADRID
91 3098000

http://www.empresariosagrupados.es/

= REPORT

+ TMA-AZ-CS-CBT-0001

Cable diagram

F09_001_TK1

Cable ID	Cable Type	no. of conductors	cross-section	cable length	function text
=E1+TMA-AZ-CS-CBT-0001-234W3	SUPER-PAAR-TRONIC 340-C-PUR 1x2x0,34 mm²	2	0,34		AZ DYNALEN RETURN PRESSURE

function text	X-Ref	Connected to	Pin	conductor	Connected to	Pin	X-Ref
AZ DYNALEN RETURN PRESSURE	/337.8	-X12	10.C	**WH**	-220A31	2:22	/234.3
=	/337.8	-X12	10.B	**BN**	-220A31	2:32	/234.4
=	/234.3	-234W3		**SH**	-234W3-SH		/234.4

IK4 TEKNIKER Research Alliance

IK4-TEKNIKER
AVDA. OTAOLA 20
20600 Eibar (Gipuzkoa) Spain
Tfno.:(+34) 943 206744
Fax: (+34) 943 202757
Web: www.tekniker.es

Date	23/02/2017						
Reviewed	F.LÓPEZ	2.3	15/12/2017	JOSE MANUEL			
Drew by	jcastano	Review	Date	Name	Review	Date	Name

3151_LSST

MCS Design Electrical Schematics

LSST TELESCOPE

Replaces

Replaced by

Cable diagram
=E1+TMA-AZ-CS-CBT-0001-234W3

Customer:

EMPRESARIOS AGRUPADOS

EMPRESARIOS AGRUPADOS
C/Magallanes, 3
28015 MADRID
91 3098000

http://www.empresariosagrupados.es/

= REPORT

+ TMA-AZ-CS-CBT-0001

Cable diagram

F09_001_TK1

Cable ID	Cable Type	no. of conductors	cross-section	cable length	function text
=E1+TMA-AZ-CS-CBT-0001-234W4	SUPER-PAAR-TRONIC 340-C-PUR 1x2x0,34 mm²	2	0,34		OSS ELEVATION IO CABINET OUTLET PRESSURE +X

function text	X-Ref	Connected to	Pin	conductor	Connected to	Pin	X-Ref
EL 1-6 DRIVERS COOLING CIRCUIT OUT PRESSURE	/338.1	-X12	11.C	**WH**	-220A31	2:23	/234.4
=	/338.1	-X12	11.B	**BN**	-220A31	2:33	/234.4
OSS ELEVATION IO CABINET OUTLET PRESSURE +X	/234.4	-234W4		**SH**	-234W4-SH		/234.5

IK4 TEKNIKER Research Alliance

IK4-TEKNIKER
AVDA. OTAOLA 20
20600 Eibar (Gipuzkoa) Spain
Tfno.:(+34) 943 206744
Fax: (+34) 943 202757
Web: www.tekniker.es

Date	23/02/2017						
Reviewed	F.LÓPEZ	2.3	15/12/2017	JOSE MANUEL			
Drew by	jcastano	Review	Date	Name	Review	Date	Name

3151_LSST

MCS Design Electrical Schematics

LSST TELESCOPE

Replaces

Replaced by

Cable diagram
=E1+TMA-AZ-CS-CBT-0001-234W4

Customer:

EMPRESARIOS AGRUPADOS
C/Magallanes, 3
28015 MADRID
91 3098000

http://www.empresariosagrupados.es/

= REPORT

+ TMA-AZ-CS-CBT-0001

Cable diagram

F09_001_TK1

Cable ID	Cable Type	no. of conductors	cross-section	cable length	function text
=E1+TMA-AZ-CS-CBT-0001-234W7	SUPER-PAAR-TRONIC 340-C-PUR 1x2x0,34 mm²	2	0,34		MCC CABINET COOLING CIRCUIT OUT PRESSURE

function text	X-Ref	Connected to	Pin	conductor	Connected to	Pin	X-Ref
MCC CABINET COOLING CIRCUIT OUT PRESSURE	/339.2	-X12	14.C	**WH**	-220A31	4:26	/234.7
=	/339.1	-X12	14.B	**BN**	-220A31	4:36	/234.7
MCC CABINET COOLING CIRCUIT OUT PRESSURE	/234.6	-234W7		**SH**	-234W7-SH		/234.7

IK4 TEKNIKER Research Alliance

IK4-TEKNIKER
AVDA. OTAOLA 20
20600 Eibar (Gipuzkoa) Spain
Tfno.:(+34) 943 206744
Fax: (+34) 943 202757
Web: www.tekniker.es

Date	23/02/2017						
Reviewed	F.LÓPEZ	2.3	15/12/2017	JOSE MANUEL			
Drew by	jcastano	Review	Date	Name	Review	Date	Name

3151_LSST

MCS Design Electrical Schematics

LSST TELESCOPE

Replaces

Replaced by

Cable diagram
=E1+TMA-AZ-CS-CBT-0001-234W7

Customer:

EMPRESARIOS AGRUPADOS

EMPRESARIOS AGRUPADOS
C/Magallanes, 3
28015 MADRID
91 3098000

http://www.empresariosagrupados.es/

= REPORT

+ TMA-AZ-CS-CBT-0001

Cable diagram

F09_001_TK1

Cable ID	Cable Type	no. of conductors	cross-section	cable length	function text
=E1+TMA-AZ-CS-CBT-0001-234W8	SUPER-PAAR-TRONIC 340-C-PUR 1x2x0,34 mm²	2	0,34		AZ PANEL COOLING CIRCUIT OUT PRESSURE

function text	X-Ref	Connected to	Pin	conductor	Connected to	Pin	X-Ref
AZ PANEL COOLING CIRCUIT OUT PRESSURE	/339.5	-X12	15.C	**WH**	-220A31	4:27	/234.7
=	/339.5	-X12	15.B	**BN**	-220A31	4:37	/234.8
AZ PANEL COOLING CIRCUIT OUT PRESSURE	/234.7	-234W8		**SH**	-234W8-SH		/234.8

IK4 TEKNIKER Research Alliance

IK4-TEKNIKER
AVDA. OTAOLA 20
20600 Eibar (Gipuzkoa) Spain
Tfno.:(+34) 943 206744
Fax: (+34) 943 202757
Web: www.tekniker.es

Date	23/02/2017						
Reviewed	F.LÓPEZ	2.3	15/12/2017	JOSE MANUEL			
Drew by	jcastano	Review	Date	Name	Review	Date	Name

3151_LSST

MCS Design Electrical Schematics

LSST TELESCOPE

Replaces

Replaced by

Cable diagram
=E1+TMA-AZ-CS-CBT-0001-234W8

Customer:

EMPRESARIOS AGRUPADOS

EMPRESARIOS AGRUPADOS
C/Magallanes, 3
28015 MADRID
91 3098000

http://www.empresariosagrupados.es/

= REPORT

+ TMA-AZ-CS-CBT-0001

Cable diagram

F09_001_TK1

Cable ID	Cable Type	no. of conductors	cross-section	cable length	function text
=E1+TMA-AZ-CS-CBT-0001-235W1	SUPER-PAAR-TRONIC 340-C-PUR 1x2x0,34 mm²	2	0,34		AZ DYNALEN SUPPLY TEMPERATURE

function text	X-Ref	Connected to	Pin	conductor	Connected to	Pin	X-Ref
AZ DYNALEN SUPPLY TEMPERATURE	/340.2	-X12	16.C	**WH**	-220A32	1:20	/235.1
=	/340.1	-X12	16.B	**BN**	-220A32	1:30	/235.2
=	/235.1	-235W1		**SH**	-235W1-SH		/235.2

IK4 TEKNIKER Research Alliance

IK4-TEKNIKER
AVDA. OTAOLA 20
20600 Eibar (Gipuzkoa) Spain
Tfno.:(+34) 943 206744
Fax: (+34) 943 202757
Web: www.tekniker.es

Date	23/02/2017						
Reviewed	F.LÓPEZ	2.3	15/12/2017	JOSE MANUEL			
Drew by	jcastano	Review	Date	Name	Review	Date	Name

3151_LSST

MCS Design Electrical Schematics

LSST TELESCOPE

Replaces

Replaced by

Cable diagram
=E1+TMA-AZ-CS-CBT-0001-235W1

Customer:

EMPRESARIOS AGRUPADOS

EMPRESARIOS AGRUPADOS
C/Magallanes, 3
28015 MADRID
91 3098000

http://www.empresariosagrupados.es/

= REPORT

+ TMA-AZ-CS-CBT-0001

Cable diagram

F09_001_TK1

Cable ID	Cable Type	no. of conductors	cross-section	cable length	function text
=E1+TMA-AZ-CS-CBT-0001-235W2	SUPER-PAAR-TRONIC 340-C-PUR 1x2x0,34 mm²	2	0,34		AZ DYNALEN RETURN TEMPERATURE

function text	X-Ref	Connected to	Pin	conductor	Connected to	Pin	X-Ref
AZ DYNALEN RETURN TEMPERATURE	/340.5	-X12	17.C	**WH**	-220A32	1:21	/235.2
=	/340.5	-X12	17.B	**BN**	-220A32	1:31	/235.2
=	/235.2	-235W2		**SH**	-235W2-SH		/235.3

IK4 TEKNIKER Research Alliance

IK4-TEKNIKER
AVDA. OTAOLA 20
20600 Eibar (Gipuzkoa) Spain
Tfno.:(+34) 943 206744
Fax: (+34) 943 202757
Web: www.tekniker.es

Date	23/02/2017						
Reviewed	F.LÓPEZ	2.3	15/12/2017	JOSE MANUEL			
Drew by	jcastano	Review	Date	Name	Review	Date	Name

3151_LSST

MCS Design Electrical Schematics

LSST TELESCOPE

Replaces

Replaced by

Cable diagram
=E1+TMA-AZ-CS-CBT-0001-235W2

Customer:

EMPRESARIOS AGRUPADOS

EMPRESARIOS AGRUPADOS
C/Magallanes, 3
28015 MADRID
91 3098000

http://www.empresariosagrupados.es/

= REPORT

+ TMA-AZ-CS-CBT-0001

Cable diagram

F09_001_TK1

Cable ID	Cable Type	no. of conductors	cross-section	cable length	function text
=E1+TMA-AZ-CS-CBT-0001-235W8	SUPER-PAAR-TRONIC 340-C-PUR 1x2x0,34 mm²	2	0,34		AZCW+ AIR OUT PRESSURE

function text	X-Ref	Connected to	Pin	conductor	Connected to	Pin	X-Ref
AZCW+ AIR OUT PRESSURE	/345.2	-X12	18C	**WH**	-220A32	4:27	/235.7
=	/345.1	-X12	18B	**BN**	-220A32	4:37	/235.8
=	/235.7	-235W8		**SH**	-235W8-SH		/235.8

IK4 TEKNIKER Research Alliance

IK4-TEKNIKER
AVDA. OTAOLA 20
20600 Eibar (Gipuzkoa) Spain
Tfno.:(+34) 943 206744
Fax: (+34) 943 202757
Web: www.tekniker.es

Date	23/02/2017						
Reviewed	F.LÓPEZ	2.3	15/12/2017	JOSE MANUEL			
Drew by	jcastano	Review	Date	Name	Review	Date	Name

3151_LSST

MCS Design Electrical Schematics

LSST TELESCOPE

Replaces

Replaced by

Cable diagram
=E1+TMA-AZ-CS-CBT-0001-235W8

Customer:

EMPRESARIOS AGRUPADOS

EMPRESARIOS AGRUPADOS
C/Magallanes, 3
28015 MADRID
91 3098000

http://www.empresariosagrupados.es/

= REPORT

+ TMA-AZ-CS-CBT-0001

Cable diagram

F09_001_TK1

Cable ID	Cable Type	no. of conductors	cross-section	cable length	function text
=E1+TMA-AZ-CS-CBT-0001-236W1	SUPER-PAAR-TRONIC 340-C-PUR 1x2x0,34 mm²	2	0,34		CABINET MISING VALVE POSITION

function text	X-Ref	Connected to	Pin	conductor	Connected to	Pin	X-Ref
Mixing Valve	/101.3	-X10	6	**WH**	-220A33	1:00	/236.2
=	/101.2	-X10	5	**BN**	-220A33	1:10	/236.2
CABINET MISING VALVE POSITION	/236.2	-236W1		**SH**	-236W1-SH		/236.2

IK4 TEKNIKER Research Alliance

IK4-TEKNIKER
AVDA. OTAOLA 20
20600 Eibar (Gipuzkoa) Spain
Tfno.:(+34) 943 206744
Fax: (+34) 943 202757
Web: www.tekniker.es

Date	23/02/2017						
Reviewed	F.LÓPEZ	2.3	15/12/2017	JOSE MANUEL			
Drew by	jcastano	Review	Date	Name	Review	Date	Name

3151_LSST

MCS Design Electrical Schematics

LSST TELESCOPE

Replaces

Replaced by

Cable diagram
=E1+TMA-AZ-CS-CBT-0001-236W1

Customer:

EMPRESARIOS AGRUPADOS

EMPRESARIOS AGRUPADOS
C/Magallanes, 3
28015 MADRID
91 3098000

http://www.empresariosagrupados.es/

= REPORT

+ TMA-AZ-CS-CBT-0001

Cable diagram

F09_001_TK1

Cable ID	Cable Type	no. of conductors	cross-section	cable length	function text
=E1+TMA-AZ-CS-CBT-0001-236W2	SUPER-PAAR-TRONIC 340-C-PUR 1x2x0,34 mm²	2	0,34		AZ1-8 MISING VALVE POSITION

function text	X-Ref	Connected to	Pin	conductor	Connected to	Pin	X-Ref
AZIMUTH 1-8 MIXING VALVE	/630.3	-X10	13	**WH**	-220A33	1:01	/236.2
=	/630.3	-X10	12	**BN**	-220A33	1:11	/236.3
AZ1-8 MISING VALVE POSITION	/236.2	-236W2		**SH**	-236W2-SH		/236.3

IK4 TEKNIKER Research Alliance

IK4-TEKNIKER
AVDA. OTAOLA 20
20600 Eibar (Gipuzkoa) Spain
Tfno.:(+34) 943 206744
Fax: (+34) 943 202757
Web: www.tekniker.es

Date	23/02/2017						
Reviewed	F.LÓPEZ	2.3	15/12/2017	JOSE MANUEL			
Drew by	jcastano	Review	Date	Name	Review	Date	Name

3151_LSST

MCS Design Electrical Schematics

LSST TELESCOPE

Replaces

Replaced by

Cable diagram
=E1+TMA-AZ-CS-CBT-0001-236W2

Customer:
EMPRESARIOS AGRUPADOS
C/Magallanes, 3
28015 MADRID
91 3098000
http://www.empresariosagrupados.es/

= REPORT

+ TMA-AZ-CS-CBT-0001

Cable diagram

F09_001_TK1

Cable ID	Cable Type	no. of conductors	cross-section	cable length	function text
=E1+TMA-AZ-CS-CBT-0001-236W3	SUPER-PAAR-TRONIC 340-C-PUR 1x2x0,34 mm²	2	0,34		AZ9-16 MISING VALVE POSITION

function text	X-Ref	Connected to	Pin	conductor	Connected to	Pin	X-Ref
AZIMUTH 9-16 MIXING VALVE	/630.7	-X10	20	**WH**	-220A33	2:02	/236.3
=	/630.7	-X10	19	**BN**	-220A33	2:12	/236.4
AZ9-16 MISING VALVE POSITION	/236.3	-236W3		**SH**	-236W3-SH		/236.4

IK4 TEKNIKER Research Alliance

IK4-TEKNIKER
AVDA. OTAOLA 20
20600 Eibar (Gipuzkoa) Spain
Tfno.:(+34) 943 206744
Fax: (+34) 943 202757
Web: www.tekniker.es

Date	23/02/2017						
Reviewed	F.LÓPEZ	2.3	15/12/2017	JOSE MANUEL			
Drew by	jcastano	Review	Date	Name	Review	Date	Name

3151_LSST

MCS Design Electrical Schematics

LSST TELESCOPE

Replaces

Replaced by

Cable diagram
=E1+TMA-AZ-CS-CBT-0001-236W3

Customer:

EMPRESARIOS AGRUPADOS

EMPRESARIOS AGRUPADOS
C/Magallanes, 3
28015 MADRID
91 3098000

http://www.empresariosagrupados.es/

= REPORT

+ TMA-AZ-CS-CBT-0001

Cable diagram

F09_001_TK1

Cable ID	Cable Type	no. of conductors	cross-section	cable length	function text
=E1+TMA-AZ-CS-CBT-0001-236W4	SUPER-PAAR-TRONIC 340-C-PUR 1x2x0,34 mm²	2	0,34		EL1-6 MISING VALVE POSITION

function text	X-Ref	Connected to	Pin	conductor	Connected to	Pin	X-Ref
ELEVATION 1-6 MIXING VALVE	/631.5	-X10	27	**WH**	-220A33	2:03	/236.4
=	/631.4	-X10	26	**BN**	-220A33	2:13	/236.5
EL1-6 MISING VALVE POSITION	/236.4	-236W4		**SH**	-236W4-SH		/236.5

IK4 TEKNIKER Research Alliance

IK4-TEKNIKER
AVDA. OTAOLA 20
20600 Eibar (Gipuzkoa) Spain
Tfno.:(+34) 943 206744
Fax: (+34) 943 202757
Web: www.tekniker.es

Date	23/02/2017						
Reviewed	F.LÓPEZ	2.3	15/12/2017	JOSE MANUEL			
Drew by	jcastano	Review	Date	Name	Review	Date	Name

3151_LSST

MCS Design Electrical Schematics

LSST TELESCOPE

Replaces

Replaced by

Cable diagram
=E1+TMA-AZ-CS-CBT-0001-236W4

Customer:

EMPRESARIOS AGRUPADOS

EMPRESARIOS AGRUPADOS
C/Magallanes, 3
28015 MADRID
91 3098000

http://www.empresariosagrupados.es/

= REPORT

+ TMA-AZ-CS-CBT-0001

Cable diagram

F09_001_TK1

Cable ID	Cable Type	no. of conductors	cross-section	cable length	function text
=E1+TMA-AZ-CS-CBT-0001-236W7	SUPER-PAAR-TRONIC 340-C-PUR 1x2x0,34 mm²	2	0,34		AZCW+ COOLING CIRCUIT IN TEMPERATURE

function text	X-Ref	Connected to	Pin	conductor	Connected to	Pin	X-Ref
AZCW+ COOLING IN TEMPERATURE	/350.1	-X12	20C	**WH**	-220A33	4:26	/236.7
=	/350.1	-X12	20B	**BN**	-220A33	4:36	/236.7
AZCW+ COOLING CIRCUIT IN TEMPERATURE	/236.6	-236W7		**SH**	-236W7-SH		/236.7

IK4 TEKNIKER Research Alliance

IK4-TEKNIKER
AVDA. OTAOLA 20
20600 Eibar (Gipuzkoa) Spain
Tfno.:(+34) 943 206744
Fax: (+34) 943 202757
Web: www.tekniker.es

Date	23/02/2017						
Reviewed	F.LÓPEZ	2.3	15/12/2017	JOSE MANUEL			
Drew by	jcastano	Review	Date	Name	Review	Date	Name

3151_LSST

MCS Design Electrical Schematics

LSST TELESCOPE

Replaces

Replaced by

Cable diagram
=E1+TMA-AZ-CS-CBT-0001-236W7

Customer:

EMPRESARIOS AGRUPADOS

EMPRESARIOS AGRUPADOS
C/Magallanes, 3
28015 MADRID
91 3098000

http://www.empresariosagrupados.es/

= REPORT

+ TMA-AZ-CS-CBT-0001

Cable diagram

F09_001_TK1

Cable ID	Cable Type	no. of conductors	cross-section	cable length	function text
=E1+TMA-AZ-CS-CBT-0001-236W8	SUPER-PAAR-TRONIC 340-C-PUR 1x2x0,34 mm²	2	0,34		AZCW+ COOLING CIRCUIT OUT TEMPERATURE

function text	X-Ref	Connected to	Pin	conductor	Connected to	Pin	X-Ref
AZCW+ COOLING OUT TEMPERATURE	/350.5	-X12	21C	**WH**	-220A33	4:27	/236.7
=	/350.4	-X12	21B	**BN**	-220A33	4:37	/236.8
AZCW+ COOLING CIRCUIT OUT TEMPERATURE	/236.7	-236W8		**SH**	-236W8-SH		/236.8

IK4 TEKNIKER Research Alliance

IK4-TEKNIKER
AVDA. OTAOLA 20
20600 Eibar (Gipuzkoa) Spain
Tfno.:(+34) 943 206744
Fax: (+34) 943 202757
Web: www.tekniker.es

Date	23/02/2017						
Reviewed	F.LÓPEZ	2.3	15/12/2017	JOSE MANUEL			
Drew by	jcastano	Review	Date	Name	Review	Date	Name

3151_LSST

MCS Design Electrical Schematics

LSST TELESCOPE

Replaces

Replaced by

Cable diagram
=E1+TMA-AZ-CS-CBT-0001-236W8

Customer:

EMPRESARIOS AGRUPADOS

EMPRESARIOS AGRUPADOS
C/Magallanes, 3
28015 MADRID
91 3098000

http://www.empresariosagrupados.es/

= REPORT

+ TMA-AZ-CS-CBT-0001

Cable diagram

F09_001_TK1

Cable ID	Cable Type	no. of conductors	cross-section	cable length	function text
=E1+TMA-AZ-CS-CBT-0001-244W1	SUPER-PAAR-TRONIC 340-C-PUR 1x2x0,34 mm²	2	0,34		AZ1-8 MIXING VALVE COMAND

function text	X-Ref	Connected to	Pin	conductor	Connected to	Pin	X-Ref
AZIMUTH 1-8 MIXING VALVE	/630.2	-X10	10	**WH**	-220A35	1:00	/244.2
=	/630.2	-X10	11	**BN**	-220A35	1:20	/244.2
AZ1-8 MIXING VALVE COMAND	/244.2	-244W1		**SH**	-244W1-SH		/244.2

IK4 TEKNIKER Research Alliance

IK4-TEKNIKER
AVDA. OTAOLA 20
20600 Eibar (Gipuzkoa) Spain
Tfno.:(+34) 943 206744
Fax: (+34) 943 202757
Web: www.tekniker.es

Date	23/02/2017						
Reviewed	F.LÓPEZ	2.3	15/12/2017	JOSE MANUEL			
Drew by	jcastano	Review	Date	Name	Review	Date	Name

3151_LSST

MCS Design Electrical Schematics

LSST TELESCOPE

Replaces

Replaced by

Cable diagram
=E1+TMA-AZ-CS-CBT-0001-244W1

Customer:

EMPRESARIOS AGRUPADOS

EMPRESARIOS AGRUPADOS
C/Magallanes, 3
28015 MADRID
91 3098000

http://www.empresariosagrupados.es/

= REPORT

+ TMA-AZ-CS-CBT-0001

Cable diagram

F09_001_TK1

Cable ID	Cable Type	no. of conductors	cross-section	cable length	function text
=E1+TMA-AZ-CS-CBT-0001-244W2	SUPER-PAAR-TRONIC 340-C-PUR 1x2x0,34 mm²	2	0,34		AZ9-16 MIXING VALVE COMAND

function text	X-Ref	Connected to	Pin	conductor	Connected to	Pin	X-Ref
AZIMUTH 9-16 MIXING VALVE	/630.6	-X10	17	**WH**	-220A35	1:01	/244.3
=	/630.7	-X10	18	**BN**	-220A35	1:21	/244.3
AZ9-16 MIXING VALVE COMAND	/244.3	-244W2		**SH**	-244W2-SH		/244.3

IK4 TEKNIKER Research Alliance

IK4-TEKNIKER
AVDA. OTAOLA 20
20600 Eibar (Gipuzkoa) Spain
Tfno.:(+34) 943 206744
Fax: (+34) 943 202757
Web: www.tekniker.es

Date	23/02/2017						
Reviewed	F.LÓPEZ	2.3	15/12/2017	JOSE MANUEL			
Drew by	jcastano	Review	Date	Name	Review	Date	Name

3151_LSST

MCS Design Electrical Schematics

LSST TELESCOPE

Replaces

Replaced by

Cable diagram
=E1+TMA-AZ-CS-CBT-0001-244W2

Customer:
EMPRESARIOS AGRUPADOS
C/Magallanes, 3
28015 MADRID
91 3098000
http://www.empresariosagrupados.es/

= REPORT

+ TMA-AZ-CS-CBT-0001

Cable diagram

F09_001_TK1

Cable ID	Cable Type	no. of conductors	cross-section	cable length	function text
=E1+TMA-AZ-CS-CBT-0001-244W3	SUPER-PAAR-TRONIC 340-C-PUR 1x2x0,34 mm²	2	0,34		EL1-6 MIXING VALVE COMAND

function text	X-Ref	Connected to	Pin	conductor	Connected to	Pin	X-Ref
ELEVATION 1-6 MIXING VALVE	/631.4	-X10	24	**WH**	-220A35	2:02	/244.4
=	/631.4	-X10	25	**BN**	-220A35	2:22	/244.4
EL1-6 MIXING VALVE COMAND	/244.4	-244W3		**SH**	-244W3-SH		/244.4

IK4 TEKNIKER Research Alliance

IK4-TEKNIKER
AVDA. OTAOLA 20
20600 Eibar (Gipuzkoa) Spain
Tfno.:(+34) 943 206744
Fax: (+34) 943 202757
Web: www.tekniker.es

Date	23/02/2017						
Reviewed	F.LÓPEZ	2.3	15/12/2017	JOSE MANUEL			
Drew by	jcastano	Review	Date	Name	Review	Date	Name

3151_LSST

MCS Design Electrical Schematics

LSST TELESCOPE

Replaces

Replaced by

Cable diagram
=E1+TMA-AZ-CS-CBT-0001-244W3

Customer:

EMPRESARIOS AGRUPADOS

EMPRESARIOS AGRUPADOS
C/Magallanes, 3
28015 MADRID
91 3098000

http://www.empresariosagrupados.es/

= REPORT

+ TMA-AZ-CS-CBT-0001

Cable diagram

F09_001_TK1

Cable ID	Cable Type	no. of conductors	cross-section	cable length	function text
=E1+TMA-AZ-CS-CBT-0001-260W1	SUPER-PAAR-TRONIC 340-C-PUR 1x2x0,34 mm²	2	0,34		MIXING VALVE SETPOINT

function text	X-Ref	Connected to	Pin	conductor	Connected to	Pin	X-Ref
Mixing Valve	/101.2	-X10	3	**WH**	-260U1-A	H3	/260.3
=	/101.2	-X10	4	**BN**	-260U1-A	F3	/260.3
MIXING VALVE SETPOINT	/260.2	-260W1		**SH**	-260W1-SH		/260.3

IK4 TEKNIKER Research Alliance

IK4-TEKNIKER
AVDA. OTAOLA 20
20600 Eibar (Gipuzkoa) Spain
Tfno.:(+34) 943 206744
Fax: (+34) 943 202757
Web: www.tekniker.es

Date	23/02/2017						
Reviewed	F.LÓPEZ	2.3	15/12/2017	JOSE MANUEL			
Drew by	jcastano	Review	Date	Name	Review	Date	Name

3151_LSST — MCS Design Electrical Schematics

LSST TELESCOPE

Replaces — Replaced by

Cable diagram
=E1+TMA-AZ-CS-CBT-0001-260W1

Customer: EMPRESARIOS AGRUPADOS
C/Magallanes, 3
28015 MADRID
91 3098000
http://www.empresariosagrupados.es/

= REPORT
+ TMA-AZ-CS-CBT-0001

Cable diagram

F09_001_TK1

Cable ID	Cable Type	no. of conductors	cross-section	cable length	function text
=E1+TMA-AZ-CS-CBT-0001-271W1	3G1,5mm2	3	1,5mm2		EIB POWER

function text	X-Ref	Connected to	Pin	conductor	Connected to	Pin	X-Ref
	/271.1	-240U1	L1 L1	**L1**	-271X2	L1	/271.1
	/271.1	-240U1	PE	**L2**	-271X2	N	/271.1
	/271.1	-240U1	L2	**PE**	-271X2	PE	/271.1

IK4 TEKNIKER Research Alliance

IK4-TEKNIKER
AVDA. OTAOLA 20
20600 Eibar (Gipuzkoa) Spain
Tfno.:(+34) 943 206744
Fax: (+34) 943 202757
Web: www.tekniker.es

Date	23/02/2017						
Reviewed	F.LÓPEZ	2.3	15/12/2017	JOSE MANUEL			
Drew by	jcastano	Review	Date	Name	Review	Date	Name

3151_LSST

MCS Design Electrical Schematics

LSST TELESCOPE

Replaces

Replaced by

Cable diagram
=E1+TMA-AZ-CS-CBT-0001-271W1

Customer:

EMPRESARIOS AGRUPADOS

EMPRESARIOS AGRUPADOS
C/Magallanes, 3
28015 MADRID
91 3098000

http://www.empresariosagrupados.es/

= REPORT

+ TMA-AZ-CS-CBT-0001

Cable diagram

F09_001_TK1

Cable ID	Cable Type	no. of conductors	cross-section	cable length	function text
=E1+TMA-AZ-CS-CBT-0001-501W2	YE ETH CAT6	5	1	1,5	ETHERNET PILZ SWITCH 1 YELOW

function text	X-Ref	Connected to	Pin	conductor	Connected to	Pin	X-Ref
	/501.2	-500A1	-X4	**ETH**	-501A1-P8	PORT1	/501.6

◁ 3060

+TMA-AZ-CS-CBT-0101/001 ▷

IK4-TEKNIKER
AVDA. OTAOLA 20
20600 Eibar (Gipuzkoa) Spain
Tfno.:(+34) 943 206744
Fax: (+34) 943 202757
Web: www.tekniker.es

Date	23/02/2017						
Reviewed	F.LÓPEZ	2.3	15/12/2017	JOSE MANUEL			
Drew by	jcastano	Review	Date	Name	Review	Date	Name

3151_LSST

MCS Design Electrical Schematics

LSST TELESCOPE

Replaces

Replaced by

Cable diagram
=E1+TMA-AZ-CS-CBT-0001-501W2

Customer:

EMPRESARIOS AGRUPADOS
C/Magallanes, 3
28015 MADRID
91 3098000

http://www.empresariosagrupados.es/

= REPORT

+ TMA-AZ-CS-CBT-0001

Customer

EMPRESARIOS AGRUPADOS

EMPRESARIOS AGRUPADOS
C/Magallanes, 3
28015 MADRID
ESPAÑA
91 3098000

http://www.empresariosagrupados.es/

Project:

3151_LSST
MCS Design Electrical Schematics
LSST TELESCOPE

REPORT
GENERAL REPORT

TMA-AZ-CS-CBT-0101
AUXILIARY AZIMUTH 1 BOX (-X)

Number of pages: 710

Made by:

IK4 TEKNIKER
Research Alliance

IK4-TEKNIKER
AVDA. OTAOLA 20
20600 Eibar (Gipuzkoa) Spain
Tfno. : (+34) 943 206744
Fax : (+34) 943 202757
Web: www.tekniker.es

Review	Review description	Date	Reviewed
2.3	VERSION INTERMEDIA PARA MONTAJE ASTURFEITO (SIN EVALUACIONES)	15/12/2017	JOSE MANUEL

Drew by: J.M.CASTAÑO

Reviewed: F.LÓPEZ

Date: 16/12/2015

Replaces:

Replaced by:

Parts list

TEKNIKER_v2

DEVICE TAG	PLACEMENT	DESCRIPTION	REFERENCE	MANUFACTURER
=E1-220A1	=E1/220.0	Bus coupler	AXL F BK EC 2688899	PHOENIX CONTACT
=E1-220A2	=E1/220.0	Bus coupler	AXL F BK EC 2688899	PHOENIX CONTACT
=E1-220A10	=E1/220.1	I/O module	2688022	PHOENIX CONTACT
=E1-220A11	=E1/220.1	I/O module	2688022	PHOENIX CONTACT
=E1-220A12	=E1/220.2	I/O module	2688022	PHOENIX CONTACT
=E1-220A13	=E1/220.3	I/O module	2688022	PHOENIX CONTACT
=E1-220A20	=E1/220.3	I/O module	2700608	PHOENIX CONTACT
=E1-220A30	=E1/220.4	I/O module	2688064	PHOENIX CONTACT
=E1-220A31	=E1/220.5	I/O module	2688064	PHOENIX CONTACT
=E1-220A32	=E1/220.5	I/O module	2688064	PHOENIX CONTACT
=E1-220A33	=E1/220.6	I/O module	2688064	PHOENIX CONTACT
=E1-220A35	=E1/220.1	I/O module	2688080	PHOENIX CONTACT
=E1-220A40	=E1/220.1	I/O module	2688556	PHOENIX CONTACT
=E1-220A41	=E1/220.2	I/O module	2688556	PHOENIX CONTACT
=E1-220A42	=E1/220.2	I/O module	2688556	PHOENIX CONTACT
=E1-220A43	=E1/220.3	I/O module	2688556	PHOENIX CONTACT
=E1-220A44	=E1/220.3	I/O module	2688556	PHOENIX CONTACT
=E1-500A1	=E1/500.0	PSSu head module	PSSu H FS SN SDT 314 085	PILZ
=E1-500A1	=E1/500.0	TERMINALS	PSSu A Con 2/8 C 313 111	PILZ
=E1-500A10	=E1/500.2	Safety digital input module	PSSu E F 4DI-T 314 200	PILZ
=E1-500A10	=E1/500.2	Base module Cage clamp terminal	PSSu BP 1/8 C-T 314 601	PILZ
=E1-500A11	=E1/500.2	Safety digital input module	PSSu E F 4DI-T 314 200	PILZ
=E1-500A11	=E1/500.2	Base module Cage clamp terminal	PSSu BP 1/8 C-T 314 601	PILZ
=E1-500A12	=E1/500.2	Safety digital input module	PSSu E F 4DI-T 314 200	PILZ
=E1-500A12	=E1/500.2	Base module Cage clamp terminal	PSSu BP 1/8 C-T 314 601	PILZ
=E1-500A13	=E1/500.2	Safety digital input module	PSSu E F 4DI-T 314 200	PILZ
=E1-500A13	=E1/500.2	Base module Cage clamp terminal	PSSu BP 1/8 C-T 314 601	PILZ
=E1-500A14	=E1/500.3	Safety digital input module	PSSu E F 4DI-T 314 200	PILZ
=E1-500A14	=E1/500.3	Base module Cage clamp terminal	PSSu BP 1/8 C-T 314 601	PILZ
=E1-500A15	=E1/500.3	Safety digital input module	PSSu E F 4DI-T 314 200	PILZ
=E1-500A15	=E1/500.3	Base module Cage clamp terminal	PSSu BP 1/8 C-T 314 601	PILZ
=E1-500A16	=E1/500.3	Safety digital input module	PSSu E F 4DI-T 314 200	PILZ
=E1-500A16	=E1/500.3	Base module Cage clamp terminal	PSSu BP 1/8 C-T 314 601	PILZ
=E1-500A17	=E1/500.3	Safety digital input module	PSSu E F 4DI-T 314 200	PILZ
=E1-500A17	=E1/500.3	Base module Cage clamp terminal	PSSu BP 1/8 C-T 314 601	PILZ
=E1-500A18	=E1/500.3	Safety digital input module	PSSu E F 4DI-T 314 200	PILZ
=E1-500A18	=E1/500.3	Base module Cage clamp terminal	PSSu BP 1/8 C-T 314 601	PILZ
=E1-500A19	=E1/500.4	Safety digital input module	PSSu E F 4DI-T 314 200	PILZ
=E1-500A19	=E1/500.4	Base module Cage clamp terminal	PSSu BP 1/8 C-T 314 601	PILZ

Parts list

TEKNIKER_v2

DEVICE TAG	PLACEMENT	DESCRIPTION	REFERENCE	MANUFACTURER
=E1-500A20	=E1/500.4	Safety digital input module	PSSu E F 4DI-T 314 200	PILZ
=E1-500A20	=E1/500.4	Base module Cage clamp terminal	PSSu BP 1/8 C-T 314 601	PILZ
=E1-500A30	=E1/500.4	Fail-safe I/O-Elektronic Module (Coated Version)	314215	PILZ
=E1-500A30	=E1/500.4	Base module Cage clamp terminal	PSSu BP -C 1/8 C-T 314611	PILZ
=E1-500A31	=E1/500.5	Fail-safe I/O-Elektronic Module (Coated Version)	314215	PILZ
=E1-500A31	=E1/500.5	Base module Cage clamp terminal	PSSu BP -C 1/8 C-T 314611	PILZ
=E1-500A32	=E1/500.5	Fail-safe I/O-Elektronic Module (Coated Version)	314215	PILZ
=E1-500A32	=E1/500.5	Base module Cage clamp terminal	PSSu BP -C 1/8 C-T 314611	PILZ
=E1-500A33	=E1/500.5	Fail-safe I/O-Elektronic Module (Coated Version)	314210	PILZ
=E1-500A33	=E1/500.5	Base module Cage clamp terminal	PSSu BP 1/8 C-T 314 601	PILZ
=E1-020F1	=E1/020.2	Miniature Circuit Breaker C 10A	A9F79310	SCHNEIDER ELECTRIC
=E1-026F1	=E1/026.2	Base element	2800929	PHOENIX CONTACT
=E1-026F1	=E1/026.2	Plug-in bridge	3030255	PHOENIX CONTACT
=E1-026F1	=E1/026.2	Plug-in bridge	3036958	PHOENIX CONTACT
=E1-026F1-F1	=E1/026.2	Thermomagnetic device circuit breaker	2800850	PHOENIX CONTACT
=E1-026F1-F1	=E1 (EC2.S15)	Electronic device circuit breaker	2800904	PHOENIX CONTACT
=E1-026F2	=E1/026.3	Base element	2800929	PHOENIX CONTACT
=E1-026F2-F2	=E1/026.3	Thermomagnetic device circuit breaker	2800854	PHOENIX CONTACT
=E1-026F2-F2	=E1 (EC2.S15)	Electronic device circuit breaker	2800907	PHOENIX CONTACT
=E1-026F3	=E1/026.4	Base element	2800929	PHOENIX CONTACT
=E1-026F3-F2	=E1 (EC2.S15)	Electronic device circuit breaker	2800907	PHOENIX CONTACT
=E1-026F3-F3	=E1/026.4	Thermomagnetic device circuit breaker	2800854	PHOENIX CONTACT
=E1-101F1	=E1/101.7	Automatico monopolar C 0,5A	A9F74170	SCHNEIDER ELECTRIC
=E1-101F2	=E1/101.7	Miniature Circuit Breaker C 1A	A9F74101	SCHNEIDER ELECTRIC
=E1-500FA1	=E1/500.4	Power supply	PSSu E F PS1-T 314 191	PILZ
=E1-500FA1	=E1/500.4	Base module Cage clamp terminal	PSSu BS-R 2/8 CT 314 655	PILZ
=E1-020G1	=E1/020.1	Power supply unit	2866792	PHOENIX CONTACT
=E1-533K1	=E1/533.4	Contactores TeSys	CAD32BD	SCHNEIDER ELECTRIC
=E1-533K2	=E1/533.5	Contactores TeSys	CAD32BD	SCHNEIDER ELECTRIC
=E1-PE	=E1/701.2	earth busbar	550220 TCB 20x5	ERICO
=E1-PE	=E1 (EC2.S15)	earth busbar	550220 TCB 20x5	ERICO
=E1-101R1	=E1/101.6	arc suppressor	084-0147-0000	WATLOW
=E1-222S1	=E1/222.2	Cabinet Door switch	SZ 4127.010	RITTAL
=E1-701SH1 1	=E1/701.4	Connection terminal block	0404017	PHOENIX CONTACT
=E1-701SH1 1	=E1/701.4	Support bracket	0404428	PHOENIX CONTACT
=E1-701SH1 1	=E1/701.4	Support bracket	0404428	PHOENIX CONTACT
=E1-701SH1 1	=E1/701.4	Neutral busbar	0402174	PHOENIX CONTACT
=E1-701SH1 1	=E1 (EC2.S15)	Support bracket	0404428	PHOENIX CONTACT
=E1-701SH1 1	=E1 (EC2.S15)	Support bracket	0404428	PHOENIX CONTACT

IK4 TEKNIKER Research Alliance

IK4-TEKNIKER
AVDA. OTAOLA 20
20600 Eibar (Gipuzkoa) Spain
Tfno.:(+34) 943 206744
Fax: (+34) 943 202757
Web: www.tekniker.es

Date	23/02/2017						
Reviewed	F.LÓPEZ	2.3	15/12/2017	JOSE MANUEL			
Drew by	jcastano	Review	Date	Name	Review	Date	Name

3151_LSST

MCS Design Electrical Schematics

LSST TELESCOPE

Replaces | Replaced by

Parts list : PILZ.314 200 - PXC.0404428

Customer: EMPRESARIOS AGRUPADOS
C/Magallanes, 3
28015 MADRID
91 3098000
http://www.empresariosagrupados.es/

= REPORT
+ TMA-AZ-CS-CBT-0101

Parts list

TEKNIKER_v2

DEVICE TAG	PLACEMENT	DESCRIPTION	REFERENCE	MANUFACTURER
=E1-701SH1 1	=E1 (EC2.S15)	Neutral busbar	0402174	PHOENIX CONTACT
=E1-701SH2 1	=E1/701.4	Connection terminal block	0404017	PHOENIX CONTACT
=E1-701SH2 1	=E1/701.4	Support bracket	0404428	PHOENIX CONTACT
=E1-701SH2 1	=E1/701.4	Support bracket	0404428	PHOENIX CONTACT
=E1-701SH2 1	=E1/701.4	Neutral busbar	0402174	PHOENIX CONTACT
=E1-701SH2 1	=E1 (EC2.S15)	Support bracket	0404428	PHOENIX CONTACT
=E1-701SH2 1	=E1 (EC2.S15)	Support bracket	0404428	PHOENIX CONTACT
=E1-701SH2 1	=E1 (EC2.S15)	Neutral busbar	0402174	PHOENIX CONTACT
=E1-701SH3 1	=E1/701.4	Connection terminal block	0404017	PHOENIX CONTACT
=E1-701SH3 1	=E1/701.4	Support bracket	0404428	PHOENIX CONTACT
=E1-701SH3 1	=E1/701.4	Support bracket	0404428	PHOENIX CONTACT
=E1-701SH3 1	=E1/701.4	Neutral busbar	0402174	PHOENIX CONTACT
=E1-701SH3 1	=E1 (EC2.S15)	Support bracket	0404428	PHOENIX CONTACT
=E1-701SH3 1	=E1 (EC2.S15)	Support bracket	0404428	PHOENIX CONTACT
=E1-701SH3 1	=E1 (EC2.S15)	Neutral busbar	0402174	PHOENIX CONTACT
=E1-101T1	=E1/101.7	Transformer	0 427 85	LEGRAND
=E1-U1	=E1 (EC2.S15)	Mounting rail EN 50 022 (35x15)	TS 35_15	...
=E1-U2	=E1 (EC2.S15)	Mounting rail EN 50 022 (35x15)	TS 35_15	...
=E1-U3	=E1 (EC2.S15)	Mounting rail EN 50 022 (35x15)	TS 35_15	...
=E1-U4	=E1 (EC2.S15)	Mounting rail EN 50 022 (35x15)	TS 35_15	...
=E1-U50	=E1 (EC2.S15)	NSYS3D6G12840P	NSYS3D6G12840P	SCHNEIDER ELECTRIC
=E1-U100	=E1 (EC2.S15)	Unex slotted trunking 80x30 in U23X	80.30.77	UNEX
=E1-U101	=E1 (EC2.S15)	Unex slotted trunking 80x60 in U23X	80.60.77	UNEX
=E1-U102	=E1 (EC2.S15)	Unex slotted trunking 80x60 in U23X	80.60.77	UNEX
=E1-U103	=E1 (EC2.S15)	Unex slotted trunking 80x60 in U23X	80.60.77	UNEX
=E1-U104	=E1 (EC2.S15)	Unex slotted trunking 80x60 in U23X	80.60.77	UNEX
=E1-U105	=E1 (EC2.S15)	Unex slotted trunking 80x60 in U23X	80.60.77	UNEX
=E1-U106	=E1 (EC2.S15)	Unex slotted trunking 80x60 in U23X	80.60.77	UNEX
=E1-101U1	=E1/101.6	heat exchanger	M05-050SB1-E9	LYTRON
=E1-101U1-101M1	=E1/101.7	AXIAL FAN	ostro 100236-12	LYTRON
=E1-101W1	=E1/101.0	UL/CSA Control Cable JZ-602-CY 3G1 mm² GY	82980	HELUKABEL
=E1-101W2	=E1/101.2	UL/CSA SUPERTRONIC®-330 C-PURö 3x0,34 mm²	49820	HELUKABEL
=E1-221W1	=E1/221.4	BLUE ETH CABLE	C6PC70S-BL-03	BLACK BOX
=E1-235W1	=E1/235.5	UL/CSA Cable for Drag Chains SUPER-PAAR-TRONIC 340-C-PUR 1x2x0,34 mm² (22 AWG) GY	49839	HELUKABEL
=E1-244W1	=E1/244.2	UL/CSA Cable for Drag Chains SUPER-PAAR-TRONIC 340-C-PUR 1x2x0,34 mm² (22 AWG) GY	49839	HELUKABEL
=E1-244W2	=E1/244.3	UL/CSA Cable for Drag Chains SUPER-PAAR-TRONIC 340-C-PUR 1x2x0,34 mm² (22 AWG) GY	49839	HELUKABEL
=E1-244W3	=E1/244.4	UL/CSA Cable for Drag Chains SUPER-PAAR-TRONIC 340-C-PUR 1x2x0,34 mm² (22 AWG) GY	49839	HELUKABEL
=E1-244W4	=E1/244.4	UL/CSA Cable for Drag Chains SUPER-PAAR-TRONIC 340-C-PUR 1x2x0,34 mm² (22 AWG) GY	49839	HELUKABEL
=E1-320W1	=E1/320.2	UL/CSA Cable for Drag Chains SUPER-PAAR-TRONIC 340-C-PUR 1x2x0,34 mm² (22 AWG) GY	49839	HELUKABEL

IK4 TEKNIKER Research Alliance
IK4-TEKNIKER
AVDA. OTAOLA 20
20600 Eibar (Gipuzkoa) Spain
Tfno.:(+34) 943 206744
Fax: (+34) 943 202757
Web: www.tekniker.es

Date	23/02/2017						
Reviewed	F.LÓPEZ	2.3	15/12/2017	JOSE MANUEL			
Drew by	jcastano	Review	Date	Name	Review	Date	Name

3151_LSST

MCS Design Electrical Schematics

LSST TELESCOPE

Replaces | Replaced by

Parts list : PXC.0402174 - HELU.49839

Customer: EMPRESARIOS AGRUPADOS
C/Magallanes, 3
28015 MADRID
91 3098000
http://www.empresariosagrupados.es/

= REPORT
+ TMA-AZ-CS-CBT-0101

Parts list

TEKNIKER_v2

DEVICE TAG	PLACEMENT	DESCRIPTION	REFERENCE	MANUFACTURER
=E1-320W2	=E1/320.4	UL/CSA Cable for Drag Chains SUPER-PAAR-TRONIC 340-C-PUR 1x2x0,34 mm² (22 AWG) GY	49839	HELUKABEL
=E1-321W1	=E1/321.2	UL/CSA Cable for Drag Chains SUPER-PAAR-TRONIC 340-C-PUR 1x2x0,34 mm² (22 AWG) GY	49839	HELUKABEL
=E1-321W2	=E1/321.4	UL/CSA Cable for Drag Chains SUPER-PAAR-TRONIC 340-C-PUR 1x2x0,34 mm² (22 AWG) GY	49839	HELUKABEL
=E1-321W3	=E1/321.6	UL/CSA Cable for Drag Chains SUPER-PAAR-TRONIC 340-C-PUR 1x2x0,34 mm² (22 AWG) GY	49839	HELUKABEL
=E1-322W1	=E1/322.2	UL/CSA Cable for Drag Chains SUPER-PAAR-TRONIC 340-C-PUR 1x2x0,34 mm² (22 AWG) GY	49839	HELUKABEL
=E1-322W2	=E1/322.4	UL/CSA Cable for Drag Chains SUPER-PAAR-TRONIC 340-C-PUR 1x2x0,34 mm² (22 AWG) GY	49839	HELUKABEL
=E1-322W3	=E1/322.6	UL/CSA Cable for Drag Chains SUPER-PAAR-TRONIC 340-C-PUR 1x2x0,34 mm² (22 AWG) GY	49839	HELUKABEL
=E1-323W1	=E1/323.2	UL/CSA Cable for Drag Chains SUPER-PAAR-TRONIC 340-C-PUR 1x2x0,34 mm² (22 AWG) GY	49839	HELUKABEL
=E1-323W2	=E1/323.4	UL/CSA Cable for Drag Chains SUPER-PAAR-TRONIC 340-C-PUR 1x2x0,34 mm² (22 AWG) GY	49839	HELUKABEL
=E1-323W3	=E1/323.6	UL/CSA Cable for Drag Chains SUPER-PAAR-TRONIC 340-C-PUR 1x2x0,34 mm² (22 AWG) GY	49839	HELUKABEL
=E1-323W4	=E1/323.8	UL/CSA Cable for Drag Chains SUPER-PAAR-TRONIC 340-C-PUR 1x2x0,34 mm² (22 AWG) GY	49839	HELUKABEL
=E1-324W1	=E1/324.2	UL/CSA Cable for Drag Chains SUPER-PAAR-TRONIC 340-C-PUR 1x2x0,34 mm² (22 AWG) GY	49839	HELUKABEL
=E1-324W2	=E1/324.4	UL/CSA Cable for Drag Chains SUPER-PAAR-TRONIC 340-C-PUR 1x2x0,34 mm² (22 AWG) GY	49839	HELUKABEL
=E1-324W3	=E1/324.7	UL/CSA Cable for Drag Chains SUPER-PAAR-TRONIC 340-C-PUR 1x2x0,34 mm² (22 AWG) GY	49839	HELUKABEL
=E1-325W1	=E1/325.3	UL/CSA Cable for Drag Chains SUPER-PAAR-TRONIC 340-C-PUR 1x2x0,34 mm² (22 AWG) GY	49839	HELUKABEL
=E1-325W2	=E1/325.5	UL/CSA Cable for Drag Chains SUPER-PAAR-TRONIC 340-C-PUR 1x2x0,34 mm² (22 AWG) GY	49839	HELUKABEL
=E1-327W1	=E1/327.2	UL/CSA Cable for Drag Chains SUPER-PAAR-TRONIC 340-C-PUR 1x2x0,34 mm² (22 AWG) GY	49839	HELUKABEL
=E1-350W1	=E1/350.2	UL/CSA Cable for Drag Chains SUPER-PAAR-TRONIC 340-C-PUR 1x2x0,34 mm² (22 AWG) GY	49839	HELUKABEL
=E1-350W2	=E1/350.5	UL/CSA Cable for Drag Chains SUPER-PAAR-TRONIC 340-C-PUR 1x2x0,34 mm² (22 AWG) GY	49839	HELUKABEL
=E1-630W2	=E1/630.2	UL/CSA Cable for Drag Chains SUPER-PAAR-TRONIC 340-C-PUR 1x2x0,34 mm² (22 AWG) GY	49839	HELUKABEL
=E1-630W4	=E1/630.7	UL/CSA Cable for Drag Chains SUPER-PAAR-TRONIC 340-C-PUR 1x2x0,34 mm² (22 AWG) GY	49839	HELUKABEL
=E1-631W2	=E1/631.4	UL/CSA Cable for Drag Chains SUPER-PAAR-TRONIC 340-C-PUR 1x2x0,34 mm² (22 AWG) GY	49839	HELUKABEL
=E1-631W3-SH	=E1/631.3	Shield connection terminal block	3025176	PHOENIX CONTACT
=E1-631W4-SH	=E1/631.5	Shield connection terminal block	3025176	PHOENIX CONTACT
=E1-X1 1	=E1/020.2	Feed-through terminal block "Push-in" PT 2,5	3209510	PHOENIX CONTACT
=E1-X1 1	=E1/020.2	3 ST2,5 busbar	3030174	PHOENIX CONTACT
=E1-X1 2	=E1/020.2	Feed-through terminal block "Push-in" PT 2,5	3209510	PHOENIX CONTACT
=E1-X1 3	=E1/026.5	Feed-through terminal block "Push-in" PT 2,5	3209510	PHOENIX CONTACT
=E1-X1 4	=E1/020.2	Feed-through terminal block "Push-in" PT 2,5	3209510	PHOENIX CONTACT
=E1-X1 5	=E1/020.2	Feed-through terminal block "Push-in" PT 2,5	3209510	PHOENIX CONTACT
=E1-X1 6	=E1/026.5	Feed-through terminal block "Push-in" PT 2,5	3209510	PHOENIX CONTACT
=E1-X1 7	=E1/026.2	Feed-through terminal block "Push-in" PT 2,5	3209510	PHOENIX CONTACT
=E1-X1 7	=E1/026.2	2,5/4-1,5/S reduction busbar	3214356	PHOENIX CONTACT
=E1-X1 8	=E1/221.1	Feed-through terminal block PT 1,5/S	3208100	PHOENIX CONTACT
=E1-X1 8	=E1/221.1	5 PT1,5 busbar	3213043	PHOENIX CONTACT
=E1-X1 9	=E1/238.1	Feed-through terminal block PT 1,5/S	3208100	PHOENIX CONTACT
=E1-X1 10	=E1/320.2	Feed-through terminal block PT 1,5/S	3208100	PHOENIX CONTACT
=E1-X1 11	=E1/502.2	Feed-through terminal block PT 1,5/S	3208100	PHOENIX CONTACT
=E1-X1 12	=E1/502.2	Feed-through terminal block PT 1,5/S	3208100	PHOENIX CONTACT

IK4 TEKNIKER Research Alliance
IK4-TEKNIKER
AVDA. OTAOLA 20
20600 Eibar (Gipuzkoa) Spain
Tfno.:(+34) 943 206744
Fax: (+34) 943 202757
Web: www.tekniker.es

Date	23/02/2017						
Reviewed	F.LÓPEZ	2.3	15/12/2017	JOSE MANUEL			
Drew by	jcastano	Review	Date	Name	Review	Date	Name

3151_LSST
MCS Design Electrical Schematics
LSST TELESCOPE
Replaces
Replaced by

Parts list : HELU.49839 - PXC.3208100

Customer: EMPRESARIOS AGRUPADOS
C/Magallanes, 3
28015 MADRID
91 3098000
http://www.empresariosagrupados.es/

= REPORT
+ TMA-AZ-CS-CBT-0101

Parts list

TEKNIKER_v2

DEVICE TAG		PLACEMENT	DESCRIPTION	REFERENCE	MANUFACTURER
=E1-X1	13	=E1/026.2	Feed-through terminal block "Push-in" PT 2,5	3209510	PHOENIX CONTACT
=E1-X1	13	=E1/026.2	2,5/4-1,5/S reduction busbar	3214356	PHOENIX CONTACT
=E1-X1	14	=E1/221.1	Feed-through terminal block PT 1,5/S	3208100	PHOENIX CONTACT
=E1-X1	14	=E1/221.1	5 PT1,5 busbar	3213043	PHOENIX CONTACT
=E1-X1	15	=E1/238.1	Feed-through terminal block PT 1,5/S	3208100	PHOENIX CONTACT
=E1-X1	16	=E1/320.2	Feed-through terminal block PT 1,5/S	3208100	PHOENIX CONTACT
=E1-X1	17	=E1/502.2	Feed-through terminal block PT 1,5/S	3208100	PHOENIX CONTACT
=E1-X1	18	=E1/502.2	Feed-through terminal block PT 1,5/S	3208100	PHOENIX CONTACT
=E1-X1	19	=E1/026.3	Feed-through terminal block "Push-in" PT 2,5	3209510	PHOENIX CONTACT
=E1-X1	19	=E1/026.3	2,5/4-1,5/S reduction busbar	3214356	PHOENIX CONTACT
=E1-X1	20	=E1/222.1	Feed-through terminal block PT 1,5/S	3208100	PHOENIX CONTACT
=E1-X1	20	=E1/222.1	3 pt-1,5 busbar	3213027	PHOENIX CONTACT
=E1-X1	21	=E1/502.8	Feed-through terminal block PT 1,5/S	3208100	PHOENIX CONTACT
=E1-X1	22	=E1/502.8	Feed-through terminal block PT 1,5/S	3208100	PHOENIX CONTACT
=E1-X1	23	=E1/026.3	Feed-through terminal block "Push-in" PT 2,5	3209510	PHOENIX CONTACT
=E1-X1	23	=E1/026.3	2,5/4-1,5/S reduction busbar	3214356	PHOENIX CONTACT
=E1-X1	24	=E1/502.2	Feed-through terminal block PT 1,5/S	3208100	PHOENIX CONTACT
=E1-X1	25	=E1/502.8	Feed-through terminal block PT 1,5/S	3208100	PHOENIX CONTACT
=E1-X1	26	=E1/502.8	Feed-through terminal block PT 1,5/S	3208100	PHOENIX CONTACT
=E1-X1	27	=E1/026.4	Feed-through terminal block "Push-in" PT 2,5	3209510	PHOENIX CONTACT
=E1-X1	27	=E1/026.4	2,5/4-1,5/S reduction busbar	3214356	PHOENIX CONTACT
=E1-X1	28	=E1/630.3	Feed-through terminal block PT 1,5/S	3208100	PHOENIX CONTACT
=E1-X1	28	=E1/630.3	3 pt-1,5 busbar	3213027	PHOENIX CONTACT
=E1-X1	29	=E1/631.6	Feed-through terminal block PT 1,5/S	3208100	PHOENIX CONTACT
=E1-X1	30	=E1/631.7	Feed-through terminal block PT 1,5/S	3208100	PHOENIX CONTACT
=E1-X1	31	=E1/026.4	Feed-through terminal block "Push-in" PT 2,5	3209510	PHOENIX CONTACT
=E1-X1	31	=E1/026.4	No traducido!!!!	3030187	PHOENIX CONTACT
=E1-X1	32	=E1/630.1	Feed-through terminal block PT 1,5/S	3208100	PHOENIX CONTACT
=E1-X1	32	=E1/630.1	3 pt-1,5 busbar	3213027	PHOENIX CONTACT
=E1-X1	33	=E1/630.7	Feed-through terminal block PT 1,5/S	3208100	PHOENIX CONTACT
=E1-X1	33	=E1/630.7	3 pt-1,5 busbar	3213027	PHOENIX CONTACT
=E1-X1	34	=E1/631.6	Feed-through terminal block PT 1,5/S	3208100	PHOENIX CONTACT
=E1-X10	1	=E1/701.2	Feed-through terminal block "Push-in" PT 2,5	3209510	PHOENIX CONTACT
=E1-X10	1	=E1/701.2	2 ST2,5 busbar	3030161	PHOENIX CONTACT
=E1-X10	2	=E1/020.4	Feed-through terminal block "Push-in" PT 2,5	3209510	PHOENIX CONTACT
=E1-X10	3	=E1/701.2	Feed-through terminal block "Push-in" PT 2,5	3209510	PHOENIX CONTACT
=E1-X10	3	=E1/701.2	2 ST2,5 busbar	3030161	PHOENIX CONTACT
=E1-X10	4	=E1/020.4	Feed-through terminal block "Push-in" PT 2,5	3209510	PHOENIX CONTACT
=E1-X10	5	=E1/701.2	Feed-through terminal block "Push-in" PT 2,5	3209510	PHOENIX CONTACT

IK4 TEKNIKER Research Alliance

IK4-TEKNIKER
AVDA. OTAOLA 20
20600 Eibar (Gipuzkoa) Spain
Tfno.:(+34) 943 206744
Fax: (+34) 943 202757
Web: www.tekniker.es

Date	23/02/2017						
Reviewed	F.LÓPEZ	2.3	15/12/2017	JOSE MANUEL			
Drew by	jcastano	Review	Date	Name	Review	Date	Name

3151_LSST

MCS Design Electrical Schematics

LSST TELESCOPE

Replaces | Replaced by

Parts list : PXC.3209510 - PXC.3209510

Customer: EMPRESARIOS AGRUPADOS
C/Magallanes, 3
28015 MADRID
91 3098000
http://www.empresariosagrupados.es/

= REPORT
+ TMA-AZ-CS-CBT-0101

Parts list

TEKNIKER_v2

DEVICE TAG		PLACEMENT	DESCRIPTION	REFERENCE	MANUFACTURER
=E1-X10	5	=E1/701.2	2 ST2,5 busbar	3030161	PHOENIX CONTACT
=E1-X10	6	=E1/020.4	Feed-through terminal block "Push-in" PT 2,5	3209510	PHOENIX CONTACT
=E1-X10	7	=E1/630.0	Feed-through terminal block PT 1,5/S	3208100	PHOENIX CONTACT
=E1-X10	8	=E1/630.0	Feed-through terminal block PT 1,5/S	3208100	PHOENIX CONTACT
=E1-X10	9	=E1/630.1	Feed-through terminal block PT 1,5/S	3208100	PHOENIX CONTACT
=E1-X10	10	=E1/630.2	Feed-through terminal block PT 1,5/S	3208100	PHOENIX CONTACT
=E1-X10	11	=E1/630.2	Feed-through terminal block PT 1,5/S	3208100	PHOENIX CONTACT
=E1-X10	12	=E1/630.2	Feed-through terminal block PT 1,5/S	3208100	PHOENIX CONTACT
=E1-X10	13	=E1/630.3	Feed-through terminal block PT 1,5/S	3208100	PHOENIX CONTACT
=E1-X10	14	=E1/630.5	Feed-through terminal block PT 1,5/S	3208100	PHOENIX CONTACT
=E1-X10	15	=E1/630.5	Feed-through terminal block PT 1,5/S	3208100	PHOENIX CONTACT
=E1-X10	16	=E1/630.5	Feed-through terminal block PT 1,5/S	3208100	PHOENIX CONTACT
=E1-X10	17	=E1/630.6	Feed-through terminal block PT 1,5/S	3208100	PHOENIX CONTACT
=E1-X10	18	=E1/630.7	Feed-through terminal block PT 1,5/S	3208100	PHOENIX CONTACT
=E1-X10	19	=E1/630.7	Feed-through terminal block PT 1,5/S	3208100	PHOENIX CONTACT
=E1-X10	20	=E1/630.7	Feed-through terminal block PT 1,5/S	3208100	PHOENIX CONTACT
=E1-X10	21	=E1/631.2	Feed-through terminal block PT 1,5/S	3208100	PHOENIX CONTACT
=E1-X10	22	=E1/631.2	Feed-through terminal block PT 1,5/S	3208100	PHOENIX CONTACT
=E1-X10	23	=E1/631.3	Feed-through terminal block PT 1,5/S	3208100	PHOENIX CONTACT
=E1-X10	24	=E1/631.4	Feed-through terminal block PT 1,5/S	3208100	PHOENIX CONTACT
=E1-X10	25	=E1/631.4	Feed-through terminal block PT 1,5/S	3208100	PHOENIX CONTACT
=E1-X10	26	=E1/631.4	Feed-through terminal block PT 1,5/S	3208100	PHOENIX CONTACT
=E1-X10	27	=E1/631.5	Feed-through terminal block PT 1,5/S	3208100	PHOENIX CONTACT
=E1-X10	28	=E1/101.1	Feed-through terminal block PT 1,5/S	3208100	PHOENIX CONTACT
=E1-X10	29	=E1/101.1	Feed-through terminal block PT 1,5/S	3208100	PHOENIX CONTACT
=E1-X10	30	=E1/101.2	Feed-through terminal block PT 1,5/S	3208100	PHOENIX CONTACT
=E1-X10	31	=E1/101.2	Feed-through terminal block PT 1,5/S	3208100	PHOENIX CONTACT
=E1-X10	32	=E1/101.2	Feed-through terminal block PT 1,5/S	3208100	PHOENIX CONTACT
=E1-X10	33	=E1/101.3	Feed-through terminal block PT 1,5/S	3208100	PHOENIX CONTACT
=E1-X10	34	=E1/330.1	Feed-through terminal block PT 1,5/S	3208100	PHOENIX CONTACT
=E1-X10	35	=E1/330.2	Feed-through terminal block PT 1,5/S	3208100	PHOENIX CONTACT
=E1-X10	36	=E1/330.3	Feed-through terminal block PT 1,5/S	3208100	PHOENIX CONTACT
=E1-X10	37	=E1/330.4	Feed-through terminal block PT 1,5/S	3208100	PHOENIX CONTACT
=E1-X10	38	=E1/330.4	Feed-through terminal block PT 1,5/S	3208100	PHOENIX CONTACT
=E1-X10	39	=E1/330.5	Feed-through terminal block PT 1,5/S	3208100	PHOENIX CONTACT
=E1-X10	40	=E1/330.5	Feed-through terminal block PT 1,5/S	3208100	PHOENIX CONTACT
=E1-X10	41	=E1/330.6	Feed-through terminal block PT 1,5/S	3208100	PHOENIX CONTACT
=E1-X10	42	=E1/330.8	Feed-through terminal block PT 1,5/S	3208100	PHOENIX CONTACT
=E1-X10	43	=E1/330.8	Feed-through terminal block PT 1,5/S	3208100	PHOENIX CONTACT

IK4 TEKNIKER Research Alliance

IK4-TEKNIKER
AVDA. OTAOLA 20
20600 Eibar (Gipuzkoa) Spain
Tfno.:(+34) 943 206744
Fax: (+34) 943 202757
Web: www.tekniker.es

Date	23/02/2017						
Reviewed	F.LÓPEZ	2.3	15/12/2017	JOSE MANUEL			
Drew by	jcastano	Review	Date	Name	Review	Date	Name

3151_LSST

MCS Design Electrical Schematics

LSST TELESCOPE

Replaces | Replaced by

Parts list : PXC.3030161 - PXC.3208100

Customer: EMPRESARIOS AGRUPADOS
C/Magallanes, 3
28015 MADRID
91 3098000
http://www.empresariosagrupados.es/

= REPORT
+ TMA-AZ-CS-CBT-0101

Parts list

TEKNIKER_v2

DEVICE TAG	PLACEMENT	DESCRIPTION	REFERENCE	MANUFACTURER
=E1-X10 44	=E1/330.8	Feed-through terminal block PT 1,5/S	3208100	PHOENIX CONTACT
=E1-X10 45	=E1/330.9	Feed-through terminal block PT 1,5/S	3208100	PHOENIX CONTACT
=E1-X12 1A	=E1/320.1	Multi-level terminal block PT1,5/S	3213713	PHOENIX CONTACT
=E1-X12 2A	=E1/320.3	Multi-level terminal block PT1,5/S	3213713	PHOENIX CONTACT
=E1-X12 3A	=E1/321.1	Multi-level terminal block PT1,5/S	3213713	PHOENIX CONTACT
=E1-X12 4A	=E1/321.3	Multi-level terminal block PT1,5/S	3213713	PHOENIX CONTACT
=E1-X12 5A	=E1/321.6	Multi-level terminal block PT1,5/S	3213713	PHOENIX CONTACT
=E1-X12 6A	=E1/322.1	Multi-level terminal block PT1,5/S	3213713	PHOENIX CONTACT
=E1-X12 7A	=E1/322.3	Multi-level terminal block PT1,5/S	3213713	PHOENIX CONTACT
=E1-X12 8A	=E1/322.5	Multi-level terminal block PT1,5/S	3213713	PHOENIX CONTACT
=E1-X12 9A	=E1/322.7	Multi-level terminal block PT1,5/S	3213713	PHOENIX CONTACT
=E1-X12 10A	=E1/323.1	Multi-level terminal block PT1,5/S	3213713	PHOENIX CONTACT
=E1-X12 11A	=E1/323.3	Multi-level terminal block PT1,5/S	3213713	PHOENIX CONTACT
=E1-X12 12A	=E1/323.5	Multi-level terminal block PT1,5/S	3213713	PHOENIX CONTACT
=E1-X12 13A	=E1/323.7	Multi-level terminal block PT1,5/S	3213713	PHOENIX CONTACT
=E1-X12 14A	=E1/324.1	Multi-level terminal block PT1,5/S	3213713	PHOENIX CONTACT
=E1-X12 15A	=E1/324.3	Multi-level terminal block PT1,5/S	3213713	PHOENIX CONTACT
=E1-X12 16A	=E1/324.6	Multi-level terminal block PT1,5/S	3213713	PHOENIX CONTACT
=E1-X12 17A	=E1/325.2	Multi-level terminal block PT1,5/S	3213713	PHOENIX CONTACT
=E1-X12 18A	=E1/325.5	Multi-level terminal block PT1,5/S	3213713	PHOENIX CONTACT
=E1-X12 19A	=E1/327.1	Multi-level terminal block PT1,5/S	3213713	PHOENIX CONTACT
=E1-X12 20A	=E1/327.4	Multi-level terminal block PT1,5/S	3213713	PHOENIX CONTACT
=E1-X12 21A	=E1/350.1	Multi-level terminal block PT1,5/S	3213713	PHOENIX CONTACT
=E1-X12 22A	=E1/350.4	Multi-level terminal block PT1,5/S	3213713	PHOENIX CONTACT
=E1-101Y1	=E1/101.0	PROPORTIONAL VALVE	SAX61.03	SIEMENS
=E1-630Y1	=E1/630.0	PROPORTIONAL VALVE	SAX61.03	SIEMENS
=E1-630Y2	=E1/630.5	PROPORTIONAL VALVE	SAX61.03	SIEMENS
=E1-631Y1	=E1/631.2	PROPORTIONAL VALVE	SAX61.03	SIEMENS

IK4 TEKNIKER Research Alliance

IK4-TEKNIKER
AVDA. OTAOLA 20
20600 Eibar (Gipuzkoa) Spain
Tfno.:(+34) 943 206744
Fax: (+34) 943 202757
Web: www.tekniker.es

Date	23/02/2017						
Reviewed	F.LÓPEZ	2.3	15/12/2017	JOSE MANUEL			
Drew by	jcastano	Review	Date	Name	Review	Date	Name

3151_LSST

MCS Design Electrical Schematics

LSST TELESCOPE

Replaces | Replaced by

Parts list : PXC.3208100 - SIE.SAX61-03

Customer: EMPRESARIOS AGRUPADOS

C/Magallanes, 3
28015 MADRID
91 3098000

http://www.empresariosagrupados.es/

= REPORT

+ TMA-AZ-CS-CBT-0101

Terminal diagram

F13_001_TK_V2

Strip

=E1+TMA-AZ-CS-CBT-0101-X1

distribution terminal block

Function text	Cable name / Cable type	Target designation	Connection point	Terminal	Jumper	Wire	Target designation	Connection point	Cable name / Cable type	Page / column
24VDC AZ1		-026F1	1	1		+V11	+V11			/020.2
=		-026F2	1	2		+V11	+V11			/020.2
=				3		+V11	-026F3	1		/026.5
=				4		0V11	0V11			/020.2
=				5		0V11	0V11			/020.2
=				6		0V11				/026.5
24VDC AZIMUTH AUX BOX 1				7		+V12	-026F1	2.1		/026.2
=		-220A30	Ul:a1	8		+V12	-220A1	Ul:a1		/221.1
=		-220A35	Ul:a1	9		+V12	-220A40	UA:a1		/238.1
=		-500A1-X1	X1	10		+V12	-X12	1A		/320.2
=				11		+V12				/502.2
=				12		+V12				/502.2
=				13		0V12				/026.2
=		-220A30	Ul:b1	14		0V12	-220A1	Ul:b1		/221.1
=		-220A35	Ul:b1	15		0V12	-220A40	UA:b1		/238.1
=		-500A1-X1	X1	16		0V12	-X12	1B		/320.2
=				17		0V12				/502.2
=				18		0V12				/502.2
24 VDC I/Os AZIMUTH AUXILIAR BOX 1				19		+V13	-026F2	2.1		/026.3
=		-500A1-X2	X2	20		+V13	-220A10	UIO:a1		/222.1
=				21		+V13	-500FA1	13		/502.8
=				22		+V13				/502.8
=				23		0V13				/026.3
=		-500A1-X2	X2	24		0V13	-220A10	UIO:b1		/502.2
=				25		0V13	-500FA1	12		/502.8
=				26		0V13				/502.8
24 VDC AZIMUTH AUXLIAR BOX 1 VALVE				27		+V14	-026F3	2.1		/026.4
=		-X10	14	28		+V14	-X10	7		/630.3
						+V14	-X10	28		
24 VDC AZIMUTH AUXLIAR BOX 1 VALVE				29		+V14	-X10	21		/631.6
=				30		+V14				/631.7
=				31		0V14				/026.4
=		-220A20	4:33	32		0V14	-X10	8		/630.1
						0V14	-X10	29		
24 VDC AZIMUTH AUXLIAR BOX 1 VALVE		-X10	22	33		0V14	-X10	15		/630.7

IK4-TEKNIKER
AVDA. OTAOLA 20
20600 Eibar (Gipuzkoa) Spain
Tfno.:(+34) 943 206744
Fax: (+34) 943 202757
Web: www.tekniker.es

Date	23/02/2017					
Reviewed	F.LÓPEZ	2.3	15/12/2017	JOSE MANUEL		
Drew by	jcastano	Review	Date	Name	Review	Date	Name

3151_LSST — MCS Design Electrical Schematics

LSST TELESCOPE

Replaces | Replaced by

Terminal diagram
=E1+TMA-AZ-CS-CBT-0101-X1

Customer: EMPRESARIOS AGRUPADOS
C/Magallanes, 3
28015 MADRID
91 3098000
http://www.empresariosagrupados.es/

= REPORT
+ TMA-AZ-CS-CBT-0101

Terminal diagram

F13_001_TK_V2

Strip

=E1+TMA-AZ-CS-CBT-0101-X1

distribution terminal block

Function text	Cable name	Cable type	Target designation	Connection point	Terminal	Jumper	Wire	Target designation	Connection point	Cable type	Cable name	Page / column
24 VDC AZIMUTH AUXLIAR BOX 1 VALVE					34		0V14					/631.6

◁ 2001

2002 ▷

IK4 TEKNIKER Research Alliance

IK4-TEKNIKER
AVDA. OTAOLA 20
20600 Eibar (Gipuzkoa) Spain
Tfno.:(+34) 943 206744
Fax: (+34) 943 202757
Web: www.tekniker.es

Date	23/02/2017							
Reviewed	F.LÓPEZ	2.3	15/12/2017	JOSE MANUEL				
Drew by	jcastano	Review	Date	Name	Review	Date	Name	

3151_LSST

MCS Design Electrical Schematics

LSST TELESCOPE

Replaces

Replaced by

Terminal diagram
=E1+TMA-AZ-CS-CBT-0101-X1

Customer:

EMPRESARIOS AGRUPADOS

EMPRESARIOS AGRUPADOS
C/Magallanes, 3
28015 MADRID
91 3098000
http://www.empresariosagrupados.es/

= REPORT

+ TMA-AZ-CS-CBT-0101

Terminal diagram

F13_001_TK_V2

Strip

=E1+TMA-AZ-CS-CBT-0101-X10

FIELD terminal block

Function text					+TMA_E-630W8	+TMA_E-630W7	+TMA_E-630W6	+TMA_E-630W5	Cable name	Target designation	Connection point	Terminal	Jumper	Wire	Target designation	Connection point	Cable name	+TMA_E-701W2	-244W1	-630W2	-244W2	Page / column
					SHIELDED 3X0,5	SHIELDED 4G1,5	SHIELDE 3X0,5	SHIELDED 4G1,5	Cable type								Cable type	SHIELDED 4G2,5	SUPER-PAAR-TRONIC 340-C-PUR 1x2x0,34 mm²	SUPER-PAAR-TRONIC 340-C-PUR 1x2x0,34 mm²	SUPER-PAAR-TRONIC 340-C-PUR 1x2x0,34 mm²	
400v 50Hz AZ1										-020F1	1	1			+TMA-AZ-CS-CBT-0001-X10	72		1				/701.2
=										-101F1	1	2										/020.4
=										-020F1	3	3			+TMA-AZ-CS-CBT-0001-X10	73		2				/701.2
=												4										/020.4
=										-020F1	5	5			+TMA-AZ-CS-CBT-0001-X10	74		3				/701.2
=										-101T1	V1	6										/020.4
AZIMUTH 17-24 MIXING VALVE								1		-630Y1	G	7		*+V14*	-X1	28						/630.0
=								2		-630Y1	G0	8		*0V14*	-X1	32						/630.0
=								3		-630Y1	Z	9		*A200.1*	-220A20	2:11						/630.1
=							WH			-630Y1	Y	10			-220A35	1:00			WH			/630.2
=							BN			-630Y1	M	11			-220A35	1:20			BN			/630.2
=												12			-220A32	3:15				BN		/630.2
=							GN			-630Y1	U	13			-220A32	3:05				WH		/630.3
AZIMUTH 25-32 MIXING VALVE						1				-630Y2	G	14		*+V14*	-X1	28						/630.5
=						2				-630Y2	G0	15		*0V14*	-X1	33						/630.5
=						3				-630Y2	Z	16		*A200.2*	-220A20	3:12						/630.5
=					WH					-630Y2	Y	17			-220A35	1:01					WH	/630.6
=					BN					-630Y2	M	18			-220A35	1:21					BN	/630.7

◁ 2001.a

2002.a ▷

IK4-TEKNIKER
AVDA. OTAOLA 20
20600 Eibar (Gipuzkoa) Spain
Tfno.:(+34) 943 206744
Fax: (+34) 943 202757
Web: www.tekniker.es

Date	23/02/2017							
Reviewed	F.LÓPEZ	2.3	15/12/2017	JOSE MANUEL				
Drew by	jcastano	Review	Date	Name	Review	Date	Name	

3151_LSST
MCS Design Electrical Schematics
LSST TELESCOPE

Replaces | Replaced by

Terminal diagram
=E1+TMA-AZ-CS-CBT-0101-X10

Customer:
EMPRESARIOS AGRUPADOS
C/Magallanes, 3
28015 MADRID
91 3098000
http://www.empresariosagrupados.es/

= REPORT
+ TMA-AZ-CS-CBT-0101

Terminal diagram

F13_001_TK_V2

Strip

=E1+TMA-AZ-CS-CBT-0101-X10

FIELD terminal block

Function text				-101W2	-101W1	+TMA_E-631W4	+TMA_E-631W3	+TMA_E-630W8	Cable name	Target designation	Connection point	Terminal	Jumper	Wire	Target designation	Connection point	Cable name	-630W4	-244W3	-631W2	-244W4	Page / column
				SUPERTRONIC ® 330-C-PUR6 3x0,34 mm²	1Z-602-CY 3G1	SHIELDED 3X0,5	SHIELDED 4G1,5	SHIELDED 3X0,5	Cable type								Cable type	SUPER-PAAR-TRONIC 340-C-PUR 1x2x0,34 mm²	SUPER-PAAR-TRONIC 340-C-PUR 1x2x0,34 mm²	SUPER-PAAR-TRONIC 340-C-PUR 1x2x0,34 mm²	SUPER-PAAR-TRONIC 340-C-PUR 1x2x0,34 mm²	
AZIMUTH 25-32 MIXING VALVE												19			-220A32	4:16		BN				/630.7
=								GN		-630Y2	U	20			-220A32	4:06		WH				/630.7
ELEVATION 7-12 MIXING VALVE							1			-631Y1	G	21		+V14	-X1	29						/631.2
=							2			-631Y1	G0	22		0V14	-X1	33						/631.2
=							3			-631Y1	Z	23		A200.3	-220A20	4:13						/631.3
=						WH				-631Y1	Y	24			-220A35	2:02			WH			/631.4
=						BN				-631Y1	M	25			-220A35	2:22			BN			/631.4
=												26			-220A32	4:17				BN		/631.4
=						GN				-631Y1	U	27			-220A32	4:07				WH		/631.5
Mixing Valve					1					-101Y1	G	28		+V14	-X1	28						/101.1
=					2					-101Y1	G0	29		0V14	-X1	32						/101.1
=				WH						-101Y1	Y	30			-220A35	2:03					WH	/101.2
=				BN						-101Y1	M	31			-220A35	2:23					BN	/101.2

IK4-TEKNIKER
AVDA. OTAOLA 20
20600 Eibar (Gipuzkoa) Spain
Tfno.:(+34) 943 206744
Fax: (+34) 943 202757
Web: www.tekniker.es

Date	23/02/2017							
Reviewed	F.LÓPEZ	2.3	15/12/2017	JOSE MANUEL				
Drew by	jcastano	Review	Date	Name	Review	Date	Name	

3151_LSST

MCS Design Electrical Schematics

LSST TELESCOPE

Replaces

Replaced by

Terminal diagram
=E1+TMA-AZ-CS-CBT-0101-X10

Customer:

EMPRESARIOS AGRUPADOS
C/Magallanes, 3
28015 MADRID
91 3098000
http://www.empresariosagrupados.es/

= REPORT

+ TMA-AZ-CS-CBT-0101

Terminal diagram

F13_001_TK_V2

Strip

=E1+TMA-AZ-CS-CBT-0101-X10

FIELD terminal block

Function text	+TMA_E-330W3	+TMA_E-330W2	-101W2	Cable name	Target designation	Connection point	Terminal	Jumper	Wire	Target designation	Connection point	Cable name	-235W1	Page / column
	4x1 Shielded	SHIELDED 9G1	SUPERTRONIC ® 330-C-PUR® 3x0,34 mm²	Cable type								Cable type	SUPER-PAAR-TRONIC 340-C-PUR 1x2x0,34 mm²	
Mixing Valve							32			-220A32	3:14		BN	/101.2
=			GN		-101Y1	U	33			-220A32	3:04		WH	/101.3
		1			+TMA-AZ-DR-CBT-0001-X20	1	34		E200.8	-220A10	40			/330.1
		2			+TMA-AZ-DR-CBT-0001-X20	3	35		E200.9	-220A10	41			/330.2
		3			+TMA-AZ-DR-CBT-0001-X20	5	36		E200.10	-220A10	42			/330.3
		4			+TMA-AZ-DR-CBT-0001-X20	7	37		E200.11	-220A10	43			/330.4
		5			+TMA-AZ-DR-CBT-0001-X20	8	38		223.11	-220A10	54			/330.4
		6			+TMA-AZ-DR-CBT-0001-X20	FREE	39		E200.12	-220A10	44			/330.5
		7			+TMA-AZ-DR-CBT-0001-X12	1	40		A200.0	-220A20	1:10			/330.5
		8			+TMA-AZ-DR-CBT-0001-X12	2	41		230.01	-220A20	1:20			/330.6
	1				+TMA-AZ-DR-CBT-0001-X	1	42		330.02	-533K1	4			/330.8
	2				+TMA-AZ-DR-CBT-0001-X	2	43		330.01	-533K1	3			/330.8
	3				+TMA-AZ-DR-CBT-0001-X	3	44		330.04	-533K2	4			/330.8
	4				+TMA-AZ-DR-CBT-0001-X	4	45		330.03	-533K2	3			/330.9

◁ 2002.a

2003 ▷

IK4-TEKNIKER
AVDA. OTAOLA 20
20600 Eibar (Gipuzkoa) Spain
Tfno.:(+34) 943 206744
Fax: (+34) 943 202757
Web: www.tekniker.es

Date	23/02/2017							
Reviewed	F.LÓPEZ	2.3	15/12/2017	JOSE MANUEL				
Drew by	jcastano	Review	Date	Name	Review	Date	Name	

3151_LSST

MCS Design Electrical Schematics

LSST TELESCOPE

Replaces | Replaced by

Terminal diagram
=E1+TMA-AZ-CS-CBT-0101-X10

Customer: EMPRESARIOS AGRUPADOS
C/Magallanes, 3
28015 MADRID
91 3098000
http://www.empresariosagrupados.es/

= REPORT
+ TMA-AZ-CS-CBT-0101

Terminal diagram

F13_001_TK_V2

Strip

=E1+TMA-AZ-CS-CBT-0101-X12

4-20mA SENSORS

Function text				+TMA_E-321W7	+TMA_E-321W6	+TMA_E-321W5	+TMA_E-320W8	+TMA_E-320W7	Cable name	Target designation	Connection point	Terminal	Jumper	Wire	Target designation	Connection point	Cable name	-320W1	-320W2	-321W1	-321W2	Page / column
				LiCYC 2x0,34	LiCYC 2x0,34	LiCYC 2x0,34	LiCYC 2x0,34	LiCYC 2x0,34	Cable type								Cable type	SUPER-PAAR-TRONIC 340-C-PUR 1x2x0,34 mm²	SUPER-PAAR-TRONIC 340-C-PUR 1x2x0,34 mm²	SUPER-PAAR-TRONIC 340-C-PUR 1x2x0,34 mm²	SUPER-PAAR-TRONIC 340-C-PUR 1x2x0,34 mm²	
AZCW-COOLING CIRCUIT IN PRESSURE								WH		+TMA_E-320X1	1	1A		+V12	-X1	10						/320.1
=										-X1	16	1B			-220A30	1:30		BN				/320.1
=								BN		+TMA_E-320X1	3	1C			-220A30	1:20		WH				/320.1
AZCW-COOLING CIRCUIT OUT PRESSURE							WH			+TMA_E-320X2	1	2A										/320.3
=												2B			-220A30	1:31			BN			/320.4
=							BN			+TMA_E-320X2	3	2C			-220A30	1:21			WH			/320.4
CBCC GW OUT COOLING CIRCUIT PRESSURE						WH				+TMA_E-321X1	1	3A										/321.1
=												3B			-220A30	2:32				BN		/321.1
=						BN				+TMA_E-321X1	3	3C			-220A30	2:22				WH		/321.1
PHASE PMC CABINET OUT PRESSURE					WH					+TMA_E-321X2	1	4A										/321.3
=												4B			-220A30	2:33					BN	/321.3
=					BN					+TMA_E-321X2	3	4C			-220A30	2:23					WH	/321.4
PRESION OUT CAMERA				WH						+TMA_E-321X3	1	5A										/321.6

◁ 2002.b

2003.a ▷

IK4-TEKNIKER
AVDA. OTAOLA 20
20600 Eibar (Gipuzkoa) Spain
Tfno.:(+34) 943 206744
Fax: (+34) 943 202757
Web: www.tekniker.es

Date	23/02/2017							
Reviewed	F.LÓPEZ	2.3	15/12/2017	JOSE MANUEL				
Drew by	jcastano	Review	Date	Name	Review	Date	Name	

3151_LSST — MCS Design Electrical Schematics

LSST TELESCOPE

Replaces | Replaced by

Terminal diagram
=E1+TMA-AZ-CS-CBT-0101-X12

Customer: EMPRESARIOS AGRUPADOS
C/Magallanes, 3
28015 MADRID
91 3098000
http://www.empresariosagrupados.es/

= REPORT
+ TMA-AZ-CS-CBT-0101

Terminal diagram

F13_001_TK_V2

Strip

=E1+TMA-AZ-CS-CBT-0101-X12

4-20mA SENSORS

Function text				+TMA_E-323W1	+TMA_E-322W5	+TMA_E-322W4	+TMA_E-322W3	+TMA_E-321W7	Cable name	Target designation	Connection point	Terminal	Jumper	Wire	Target designation	Connection point	Cable name	-321W3	-322W1	-322W2	-322W3	Page / column
				LiCYC 2x0,34	LiCYC 2x0,34	LiCYC 2x0,34	LiCYC 2x0,34	LiCYC 2x0,34	Cable type								Cable type	SUPER-PAAR-TRONIC 340-C-PUR 1x2x0,34 mm²	SUPER-PAAR-TRONIC 340-C-PUR 1x2x0,34 mm²	SUPER-PAAR-TRONIC 340-C-PUR 1x2x0,34 mm²	SUPER-PAAR-TRONIC 340-C-PUR 1x2x0,34 mm²	
PRESION OUT CAMERA												5B			-220A30	3:34		BN				/321.6
=								BN		+TMA_E-321X3	3	5C			-220A30	3:24		WH				/321.6
AZ 17-24 DRIVERS COOLING CIRCUIT OUT PRESSURE							WH			+TMA_E-322X1	1	6A										/322.1
=												6B			-220A30	3:35			BN			/322.1
=							BN			+TMA_E-322X1	3	6C			-220A30	3:25			WH			/322.1
MCS AZ IO CABINET COOLING OUTLET PRESSURE						WH				+TMA_E-322X2	1	7A										/322.3
=												7B			-220A30	4:36				BN		/322.3
=						BN				+TMA_E-322X2	3	7C			-220A30	4:26				WH		/322.3
OSS EL BEARING IO -X COOLING OUTLET PRESSURE					WH					+TMA_E-322X3	1	8A										/322.5
=												8B			-220A30	4:37					BN	/322.5
=					BN					+TMA_E-322X3	3	8C			-220A30	4:27					WH	/322.5
=												9A										/322.7
=												9B										/322.8
=												9C										/322.8
AZ 25-26 DRIVERS COOLING CIRCUIT OUT PRESSURE				WH						+TMA_E-323X1	1	10A										/323.1

IK4-TEKNIKER
AVDA. OTAOLA 20
20600 Eibar (Gipuzkoa) Spain
Tfno.:(+34) 943 206744
Fax: (+34) 943 202757
Web: www.tekniker.es

Date	23/02/2017							
Reviewed	F.LÓPEZ	2.3	15/12/2017	JOSE MANUEL				
Drew by	jcastano	Review	Date	Name	Review	Date	Name	

3151_LSST

MCS Design Electrical Schematics

LSST TELESCOPE

Replaces | Replaced by

Terminal diagram
=E1+TMA-AZ-CS-CBT-0101-X12

Customer: EMPRESARIOS AGRUPADOS
C/Magallanes, 3
28015 MADRID
91 3098000
http://www.empresariosagrupados.es/

= REPORT

+ TMA-AZ-CS-CBT-0101

Terminal diagram

F13_001_TK_V2

Strip

=E1+TMA-AZ-CS-CBT-0101-X12

4-20mA SENSORS

Function text				+TMA_E-324W1	+TMA_E-323W4	+TMA_E-323W3	+TMA_E-323W2	+TMA_E-323W1	Cable name	Target designation	Connection point	Terminal	Jumper	Wire	Target designation	Connection point	Cable name	-323W1	-323W2	-323W3	-323W4	Page / column
				LiCYC 2x0,34	LiCYC 2x0,34	LiCYC 2x0,34	LiCYC 2x0,34	LiCYC 2x0,34	Cable type								Cable type	SUPER-PAAR-TRONIC 340-C-PUR 1x2x0,34 mm²	SUPER-PAAR-TRONIC 340-C-PUR 1x2x0,34 mm²	SUPER-PAAR-TRONIC 340-C-PUR 1x2x0,34 mm²	SUPER-PAAR-TRONIC 340-C-PUR 1x2x0,34 mm²	
AZ 25-26 DRIVERS COOLING CIRCUIT OUT PRESSURE												10B			-220A31	1:31		BN				/323.1
=								BN		+TMA_E-323X1	3	10C			-220A31	1:21		WH				/323.1
AZ 27-28 DRIVERS COOLING CIRCUIT OUT PRESSURE							WH			+TMA_E-323X2	1	11A										/323.3
=												11B			-220A31	2:32			BN			/323.3
=							BN			+TMA_E-323X2	3	11C			-220A31	2:22			WH			/323.3
AZ 29-30 DRIVERS COOLING CIRCUIT OUT PRESSURE						WH				+TMA_E-323X3	1	12A										/323.5
=												12B			-220A31	2:33				BN		/323.5
=						BN				+TMA_E-323X3	3	12C			-220A31	2:23				WH		/323.5
AZ 31-32 DRIVERS COOLING CIRCUIT OUT PRESSURE					WH					+TMA_E-323X4	1	13A										/323.7
=												13B			-220A31	3:34					BN	/323.8
=					BN					+TMA_E-323X4	3	13C			-220A31	3:24					WH	/323.8
EL 7-8 DRIVERS COOLING CIRCUIT OUT PRESSURE				WH						+TMA_E-324X1	1	14A										/324.1

IK4-TEKNIKER
AVDA. OTAOLA 20
20600 Eibar (Gipuzkoa) Spain
Tfno.:(+34) 943 206744
Fax: (+34) 943 202757
Web: www.tekniker.es

Date	23/02/2017							
Reviewed	F.LÓPEZ	2.3	15/12/2017	JOSE MANUEL				
Drew by	jcastano	Review	Date	Name	Review	Date	Name	

3151_LSST

MCS Design Electrical Schematics

LSST TELESCOPE

Replaces | Replaced by

Terminal diagram
=E1+TMA-AZ-CS-CBT-0101-X12

Customer: EMPRESARIOS AGRUPADOS
C/Magallanes, 3
28015 MADRID
91 3098000
http://www.empresariosagrupados.es/

= REPORT

+ TMA-AZ-CS-CBT-0101

Terminal diagram

F13_001_TK_V2

Strip

=E1+TMA-AZ-CS-CBT-0101-X12

4-20mA SENSORS

Function text				+TMA_E-325W14	+TMA_E-325W13	+TMA_E-324W3	+TMA_E-324W2	+TMA_E-324W1	Cable name	Target designation	Connection point	Terminal	Jumper	Wire	Target designation	Connection point	Cable name	-324W1	-324W2	-324W3	-325W1	Page / column
				LiCYC 2x0,34	LiCYC 2x0,34	LiCYC 2x0,34	LiCYC 2x0,34	LiCYC 2x0,34	Cable type								Cable type	SUPER-PAAR-TRONIC 340-C-PUR 1x2x0,34 mm²	SUPER-PAAR-TRONIC 340-C-PUR 1x2x0,34 mm²	SUPER-PAAR-TRONIC 340-C-PUR 1x2x0,34 mm²	SUPER-PAAR-TRONIC 340-C-PUR 1x2x0,34 mm²	
EL 7-8 DRIVERS COOLING CIRCUIT OUT PRESSURE												14B			-220A31	3:35		BN				/324.1
=								BN		+TMA_E-324X1	2	14C			-220A31	3:25		WH				/324.1
EL 9-10 DRIVERS COOLING CIRCUIT OUT PRESSURE							WH			+TMA_E-324X2	1	15A										/324.3
=												15B			-220A31	4:36			BN			/324.3
=							BN			+TMA_E-324X2	2	15C			-220A31	4:26			WH			/324.4
EL 11-12 DRIVERS COOLING CIRCUIT OUT PRESSURE						WH				+TMA_E-324X3	1	16A										/324.6
=												16B			-220A31	4:37				BN		/324.6
=						BN				+TMA_E-324X3	2	16C			-220A31	4:27				WH		/324.6
GW EL CW COOLING CIRCUIT IN PRESSURE					WH					+TMA_E-325X17	1	17A										/325.2
=												17B			-220A32	1:30					BN	/325.2
=					BN					+TMA_E-325X17	2	17C			-220A32	1:20					WH	/325.3
GW EL CW COOLING CIRCUIT OUT PRESSURE				WH						+TMA_E-325X18	1	18A										/325.5

IK4-TEKNIKER
AVDA. OTAOLA 20
20600 Eibar (Gipuzkoa) Spain
Tfno.:(+34) 943 206744
Fax: (+34) 943 202757
Web: www.tekniker.es

Date	23/02/2017							
Reviewed	F.LÓPEZ	2.3	15/12/2017	JOSE MANUEL				
Drew by	jcastano	Review	Date	Name	Review	Date	Name	

3151_LSST

MCS Design Electrical Schematics

LSST TELESCOPE

Replaces | Replaced by

Terminal diagram
=E1+TMA-AZ-CS-CBT-0101-X12

Customer: EMPRESARIOS AGRUPADOS
C/Magallanes, 3
28015 MADRID
91 3098000
http://www.empresariosagrupados.es/

= REPORT

+ TMA-AZ-CS-CBT-0101

Terminal diagram

F13_001_TK_V2

Strip

=E1+TMA-AZ-CS-CBT-0101-X12

4-20mA SENSORS

Function text					+TMA_E-350W4	+TMA_E-350W3	+TMA_E-327W1	+TMA_E-325W14	Cable name	Target designation	Connection point	Terminal	Jumper	Wire	Target designation	Connection point	Cable name	-325W2	-327W1	-350W1	-350W2	Page / column
					LiCYC 2x0,34	LiCYC 2x0,34	LiCYC 2x0,34	LiCYC 2x0,34	Cable type								Cable type	SUPER-PAAR-TRONIC 340-C-PUR 1x2x0,34 mm²	SUPER-PAAR-TRONIC 340-C-PUR 1x2x0,34 mm²	SUPER-PAAR-TRONIC 340-C-PUR 1x2x0,34 mm²	SUPER-PAAR-TRONIC 340-C-PUR 1x2x0,34 mm²	
GW EL CW COOLING CIRCUIT OUT PRESSURE												18B			-220A32	1:31		BN				/325.5
=								BN		+TMA_E-325X18	2	18C			-220A32	1:21		WH				/325.5
AZCW-AIR OUT PRESSURE							WH			+TMA_E-327X1	1	19A										/327.1
=												19B			-220A33	1:30			BN			/327.1
=							BN			+TMA_E-327X1	3	19C			-220A33	1:20			WH			/327.2
=												20A										/327.4
=												20B										/327.5
=												20C										/327.5
AZCW- COOLING IN TEMPERATURE						WH				+TMA_E-350B3	+	21A										/350.1
=												21B			-220A33	4:36				BN		/350.1
=						BN				+TMA_E-350B3	-	21C			-220A33	4:26				WH		/350.1
AZCW- COOLING OUT TEMPERATURE					WH					+TMA_E-350B4	+	22A										/350.4
=												22B			-220A33	4:37					BN	/350.4
=					BN					+TMA_E-350B4	-	22C			-220A33	4:27					WH	/350.5

IK4-TEKNIKER
AVDA. OTAOLA 20
20600 Eibar (Gipuzkoa) Spain
Tfno.:(+34) 943 206744
Fax: (+34) 943 202757
Web: www.tekniker.es

Date	23/02/2017							
Reviewed	F.LÓPEZ	2.3	15/12/2017	JOSE MANUEL				
Drew by	jcastano	Review	Date	Name	Review	Date	Name	

3151_LSST

MCS Design Electrical Schematics

LSST TELESCOPE

Replaces

Replaced by

Terminal diagram
=E1+TMA-AZ-CS-CBT-0101-X12

Customer:
EMPRESARIOS AGRUPADOS
C/Magallanes, 3
28015 MADRID
91 3098000
http://www.empresariosagrupados.es/

= REPORT

+ TMA-AZ-CS-CBT-0101

Cable diagram

F09_001_TK1

Cable ID	Cable Type	no. of conductors	cross-section	cable length	function text
=E1+TMA-AZ-CS-CBT-0101-101W1	JZ-602-CY 3G1	3	1		POWER CABINET MIXING VALVE

function text	X-Ref	Connected to	Pin	conductor	Connected to	Pin	X-Ref
Mixing Valve	/101.1	-X10	28	**1**	-101Y1	G	/101.1
=	/101.1	-X10	29	**2**	-101Y1	G0	/101.1
	/101.1	-PE	5	**GNYE**	-101Y1	PE	/101.1
POWER CABINET MIXING VALVE	/101.0	-101W1		**SH**	-101W1-SH		/101.1

◁ 2003.d

3002 ▷

IK4-TEKNIKER
AVDA. OTAOLA 20
20600 Eibar (Gipuzkoa) Spain
Tfno.:(+34) 943 206744
Fax: (+34) 943 202757
Web: www.tekniker.es

Date	23/02/2017						
Reviewed	F.LÓPEZ	2.3	15/12/2017	JOSE MANUEL			
Drew by	jcastano	Review	Date	Name	Review	Date	Name

3151_LSST

MCS Design Electrical Schematics

LSST TELESCOPE

Replaces

Replaced by

Cable diagram
=E1+TMA-AZ-CS-CBT-0101-101W1

Customer:

EMPRESARIOS AGRUPADOS
C/Magallanes, 3
28015 MADRID
91 3098000

http://www.empresariosagrupados.es/

= REPORT

+ TMA-AZ-CS-CBT-0101

Cable diagram

F09_001_TK1

Cable ID	Cable Type	no. of conductors	cross-section	cable length	function text
=E1+TMA-AZ-CS-CBT-0101-101W2	SUPERTRONIC ® 330-C-PURö 3x0,34 mm²	3	0,34		CABINET MIXING VALVE SETPOINT

function text	X-Ref	Connected to	Pin	conductor	Connected to	Pin	X-Ref
Mixing Valve	/101.2	-X10	30	**WH**	-101Y1	Y	/101.2
=	/101.2	-X10	31	**BN**	-101Y1	M	/101.2
=	/101.3	-X10	33	**GN**	-101Y1	U	/101.2
CABINET MIXING VALVE SETPOINT	/101.2	-101W2		**SH**	-101W2-SH		/101.3

IK4 TEKNIKER Research Alliance

IK4-TEKNIKER
AVDA. OTAOLA 20
20600 Eibar (Gipuzkoa) Spain
Tfno.:(+34) 943 206744
Fax: (+34) 943 202757
Web: www.tekniker.es

Date	23/02/2017						
Reviewed	F.LÓPEZ	2.3	15/12/2017	JOSE MANUEL			
Drew by	jcastano	Review	Date	Name	Review	Date	Name

3151_LSST — MCS Design Electrical Schematics

LSST TELESCOPE

Replaces — Replaced by

Cable diagram
=E1+TMA-AZ-CS-CBT-0101-101W2

Customer: EMPRESARIOS AGRUPADOS
C/Magallanes, 3
28015 MADRID
91 3098000
http://www.empresariosagrupados.es/

= REPORT
+ TMA-AZ-CS-CBT-0101

Cable diagram

F09_001_TK1

Cable ID	Cable Type	no. of conductors	cross-section	cable length	function text
=E1+TMA-AZ-CS-CBT-0101-221W1	BL ETH CAT6	5	1	1	ETHERCAT RING2 BLUE

function text	X-Ref	Connected to	Pin	conductor	Connected to	Pin	X-Ref
ETHERCAT	/221.4	-220A1	X2:ETH2	**ETH**	-220A2	X1:ETH1	/221.7

IK4 TEKNIKER Research Alliance

IK4-TEKNIKER
AVDA. OTAOLA 20
20600 Eibar (Gipuzkoa) Spain
Tfno.:(+34) 943 206744
Fax: (+34) 943 202757
Web: www.tekniker.es

Date	23/02/2017						
Reviewed	F.LÓPEZ	2.3	15/12/2017	JOSE MANUEL			
Drew by	jcastano	Review	Date	Name	Review	Date	Name

3151_LSST

MCS Design Electrical Schematics

LSST TELESCOPE

Replaces

Replaced by

Cable diagram
=E1+TMA-AZ-CS-CBT-0101-221W1

Customer:

EMPRESARIOS AGRUPADOS

EMPRESARIOS AGRUPADOS
C/Magallanes, 3
28015 MADRID
91 3098000

http://www.empresariosagrupados.es/

= REPORT

+ TMA-AZ-CS-CBT-0101

Cable diagram

F09_001_TK1

Cable ID	Cable Type	no. of conductors	cross-section	cable length	function text
=E1+TMA-AZ-CS-CBT-0101-235W1	SUPER-PAAR-TRONIC 340-C-PUR 1x2x0,34 mm²	2	0,34		CABINET MISING VALVE POSITION

function text	X-Ref	Connected to	Pin	conductor	Connected to	Pin	X-Ref
Mixing Valve	/101.3	-X10	33	**WH**	-220A32	3:04	/235.5
=	/101.2	-X10	32	**BN**	-220A32	3:14	/235.5
CABINET MISING VALVE POSITION	/235.5	-235W1		**SH**	-235W1-SH		/235.6

IK4 TEKNIKER Research Alliance

IK4-TEKNIKER
AVDA. OTAOLA 20
20600 Eibar (Gipuzkoa) Spain
Tfno.:(+34) 943 206744
Fax: (+34) 943 202757
Web: www.tekniker.es

Date	23/02/2017						
Reviewed	F.LÓPEZ	2.3	15/12/2017	JOSE MANUEL			
Drew by	jcastano	Review	Date	Name	Review	Date	Name

3151_LSST

MCS Design Electrical Schematics

LSST TELESCOPE

Replaces

Replaced by

Cable diagram
=E1+TMA-AZ-CS-CBT-0101-235W1

Customer:

EMPRESARIOS AGRUPADOS

EMPRESARIOS AGRUPADOS
C/Magallanes, 3
28015 MADRID
91 3098000

http://www.empresariosagrupados.es/

= REPORT

+ TMA-AZ-CS-CBT-0101

Cable diagram

F09_001_TK1

Cable ID	Cable Type	no. of conductors	cross-section	cable length	function text
=E1+TMA-AZ-CS-CBT-0101-244W1	SUPER-PAAR-TRONIC 340-C-PUR 1x2x0,34 mm²	2	0,34		Mixing Valve AZ 17-24 position demand

function text	X-Ref	Connected to	Pin	conductor	Connected to	Pin	X-Ref
AZIMUTH 17-24 MIXING VALVE	/630.2	-X10	10	**WH**	-220A35	1:00	/244.2
=	/630.2	-X10	11	**BN**	-220A35	1:20	/244.2
Mixing Valve AZ 17-24 position demand	/244.2	-244W1		**SH**	-244W1-SH		/244.2

IK4 TEKNIKER Research Alliance

IK4-TEKNIKER
AVDA. OTAOLA 20
20600 Eibar (Gipuzkoa) Spain
Tfno.:(+34) 943 206744
Fax: (+34) 943 202757
Web: www.tekniker.es

Date	23/02/2017						
Reviewed	F.LÓPEZ	2.3	15/12/2017	JOSE MANUEL			
Drew by	jcastano	Review	Date	Name	Review	Date	Name

3151_LSST

MCS Design Electrical Schematics

LSST TELESCOPE

Replaces

Replaced by

Cable diagram
=E1+TMA-AZ-CS-CBT-0101-244W1

Customer:

EMPRESARIOS AGRUPADOS

EMPRESARIOS AGRUPADOS
C/Magallanes, 3
28015 MADRID
91 3098000

http://www.empresariosagrupados.es/

= REPORT

+ TMA-AZ-CS-CBT-0101

Cable diagram

F09_001_TK1

Cable ID	Cable Type	no. of conductors	cross-section	cable length	function text
=E1+TMA-AZ-CS-CBT-0101-244W2	SUPER-PAAR-TRONIC 340-C-PUR 1x2x0,34 mm²	2	0,34		Mixing Valve AZ 25-32 position demand

function text	X-Ref	Connected to	Pin	conductor	Connected to	Pin	X-Ref
AZIMUTH 25-32 MIXING VALVE	/630.6	-X10	17	**WH**	-220A35	1:01	/244.3
=	/630.7	-X10	18	**BN**	-220A35	1:21	/244.3
Mixing Valve AZ 25-32 position demand	/244.3	-244W2		**SH**	-244W2-SH		/244.3

IK4 TEKNIKER Research Alliance

IK4-TEKNIKER
AVDA. OTAOLA 20
20600 Eibar (Gipuzkoa) Spain
Tfno.:(+34) 943 206744
Fax: (+34) 943 202757
Web: www.tekniker.es

Date	23/02/2017						
Reviewed	F.LÓPEZ	2.3	15/12/2017	JOSE MANUEL			
Drew by	jcastano	Review	Date	Name	Review	Date	Name

3151_LSST — MCS Design Electrical Schematics

LSST TELESCOPE

Replaces — Replaced by

Cable diagram
=E1+TMA-AZ-CS-CBT-0101-244W2

Customer: EMPRESARIOS AGRUPADOS
C/Magallanes, 3
28015 MADRID
91 3098000
http://www.empresariosagrupados.es/

= REPORT
+ TMA-AZ-CS-CBT-0101

Cable diagram

F09_001_TK1

Cable ID	Cable Type	no. of conductors	cross-section	cable length	function text
=E1+TMA-AZ-CS-CBT-0101-244W3	SUPER-PAAR-TRONIC 340-C-PUR 1x2x0,34 mm²	2	0,34		Mixing Valve El 7-12 position demand

function text	X-Ref	Connected to	Pin	conductor	Connected to	Pin	X-Ref
ELEVATION 7-12 MIXING VALVE	/631.4	-X10	24	**WH**	-220A35	2:02	/244.4
=	/631.4	-X10	25	**BN**	-220A35	2:22	/244.4
Mixing Valve El 7-12 position demand	/244.4	-244W3		**SH**	-244W3-SH		/244.4

IK4 TEKNIKER Research Alliance

IK4-TEKNIKER
AVDA. OTAOLA 20
20600 Eibar (Gipuzkoa) Spain
Tfno.:(+34) 943 206744
Fax: (+34) 943 202757
Web: www.tekniker.es

Date	23/02/2017						
Reviewed	F.LÓPEZ	2.3	15/12/2017	JOSE MANUEL			
Drew by	jcastano	Review	Date	Name	Review	Date	Name

3151_LSST

MCS Design Electrical Schematics

LSST TELESCOPE

Replaces

Replaced by

Cable diagram
=E1+TMA-AZ-CS-CBT-0101-244W3

Customer:

EMPRESARIOS AGRUPADOS

EMPRESARIOS AGRUPADOS
C/Magallanes, 3
28015 MADRID
91 3098000

http://www.empresariosagrupados.es/

= REPORT

+ TMA-AZ-CS-CBT-0101

Cable diagram

F09_001_TK1

Cable ID	Cable Type	no. of conductors	cross-section	cable length	function text
=E1+TMA-AZ-CS-CBT-0101-244W4	SUPER-PAAR-TRONIC 340-C-PUR 1x2x0,34 mm²	2	0,34		CABINET position demand

function text	X-Ref	Connected to	Pin	conductor	Connected to	Pin	X-Ref
Mixing Valve	/101.2	-X10	30	**WH**	-220A35	2:03	/244.5
=	/101.2	-X10	31	**BN**	-220A35	2:23	/244.5
CABINET position demand	/244.4	-244W4		**SH**	-244W4-SH		/244.5

IK4 TEKNIKER Research Alliance

IK4-TEKNIKER
AVDA. OTAOLA 20
20600 Eibar (Gipuzkoa) Spain
Tfno.:(+34) 943 206744
Fax: (+34) 943 202757
Web: www.tekniker.es

Date	23/02/2017						
Reviewed	F.LÓPEZ	2.3	15/12/2017	JOSE MANUEL			
Drew by	jcastano	Review	Date	Name	Review	Date	Name

3151_LSST

MCS Design Electrical Schematics

LSST TELESCOPE

Replaces

Replaced by

Cable diagram
=E1+TMA-AZ-CS-CBT-0101-244W4

Customer:

EMPRESARIOS AGRUPADOS

EMPRESARIOS AGRUPADOS
C/Magallanes, 3
28015 MADRID
91 3098000

http://www.empresariosagrupados.es/

= REPORT

+ TMA-AZ-CS-CBT-0101

Cable diagram

F09_001_TK1

Cable ID	Cable Type	no. of conductors	cross-section	cable length	function text
=E1+TMA-AZ-CS-CBT-0101-320W1	SUPER-PAAR-TRONIC 340-C-PUR 1x2x0,34 mm²	2	0,34		AZCW- COOLING CIRCUIT PRESSURE

function text	X-Ref	Connected to	Pin	conductor	Connected to	Pin	X-Ref
AZCW-COOLING CIRCUIT IN PRESSURE	/320.1	-X12	1C	**WH**	-220A30	1:20	/233.2
=	/320.1	-X12	1B	**BN**	-220A30	1:30	/233.2
AZCW- COOLING CIRCUIT PRESSURE	/320.2	-320W1		**SH**	-320W1-SH		/233.2

IK4 TEKNIKER Research Alliance

IK4-TEKNIKER
AVDA. OTAOLA 20
20600 Eibar (Gipuzkoa) Spain
Tfno.:(+34) 943 206744
Fax: (+34) 943 202757
Web: www.tekniker.es

Date	23/02/2017						
Reviewed	F.LÓPEZ	2.3	15/12/2017	JOSE MANUEL			
Drew by	jcastano	Review	Date	Name	Review	Date	Name

3151_LSST

MCS Design Electrical Schematics

LSST TELESCOPE

Replaces

Replaced by

Cable diagram
=E1+TMA-AZ-CS-CBT-0101-320W1

Customer:

EMPRESARIOS AGRUPADOS

EMPRESARIOS AGRUPADOS
C/Magallanes, 3
28015 MADRID
91 3098000

http://www.empresariosagrupados.es/

= REPORT

+ TMA-AZ-CS-CBT-0101

Cable diagram

F09_001_TK1

Cable ID	Cable Type	no. of conductors	cross-section	cable length	function text
=E1+TMA-AZ-CS-CBT-0101-320W2	SUPER-PAAR-TRONIC 340-C-PUR 1x2x0,34 mm²	2	0,34		AZCW- COOLING CIRCUIT OUT PRESSURE

function text	X-Ref	Connected to	Pin	conductor	Connected to	Pin	X-Ref
AZCW-COOLING CIRCUIT OUT PRESSURE	/320.4	-X12	2C	**WH**	-220A30	1:21	/233.2
=	/320.4	-X12	2B	**BN**	-220A30	1:31	/233.3
AZCW- COOLING CIRCUIT OUT PRESSURE	/320.4	-320W2		**SH**	-320W2-SH		/233.3

◁ 3009

3011 ▷

IK4-TEKNIKER
AVDA. OTAOLA 20
20600 Eibar (Gipuzkoa) Spain
Tfno.:(+34) 943 206744
Fax: (+34) 943 202757
Web: www.tekniker.es

Date	23/02/2017						
Reviewed	F.LÓPEZ	2.3	15/12/2017	JOSE MANUEL			
Drew by	jcastano	Review	Date	Name	Review	Date	Name

3151_LSST

MCS Design Electrical Schematics

LSST TELESCOPE

Replaces

Replaced by

Cable diagram
=E1+TMA-AZ-CS-CBT-0101-320W2

Customer:

EMPRESARIOS AGRUPADOS
C/Magallanes, 3
28015 MADRID
91 3098000

http://www.empresariosagrupados.es/

= REPORT

+ TMA-AZ-CS-CBT-0101

Cable diagram

F09_001_TK1

Cable ID	Cable Type	no. of conductors	cross-section	cable length	function text
=E1+TMA-AZ-CS-CBT-0101-321W1	SUPER-PAAR-TRONIC 340-C-PUR 1x2x0,34 mm²	2	0,34		CBCC GW OUT COOLING CIRCUIT PRESSURE

function text	X-Ref	Connected to	Pin	conductor	Connected to	Pin	X-Ref
CBCC GW OUT COOLING CIRCUIT PRESSURE	/321.1	-X12	3C	**WH**	-220A30	2:22	/233.3
=	/321.1	-X12	3B	**BN**	-220A30	2:32	/233.4
=	/321.2	-321W1		**SH**	-321W1-SH		/233.4

◁ 3010

3012 ▷

IK4 TEKNIKER Research Alliance
IK4-TEKNIKER
AVDA. OTAOLA 20
20600 Eibar (Gipuzkoa) Spain
Tfno.:(+34) 943 206744
Fax: (+34) 943 202757
Web: www.tekniker.es

Date	23/02/2017						
Reviewed	F.LÓPEZ	2.3	15/12/2017	JOSE MANUEL			
Drew by	jcastano	Review	Date	Name	Review	Date	Name

3151_LSST
MCS Design Electrical Schematics
LSST TELESCOPE

Replaces | Replaced by

Cable diagram
=E1+TMA-AZ-CS-CBT-0101-321W1

Customer: EMPRESARIOS AGRUPADOS
C/Magallanes, 3
28015 MADRID
91 3098000
http://www.empresariosagrupados.es/

= REPORT
+ TMA-AZ-CS-CBT-0101

Cable diagram

F09_001_TK1

Cable ID	Cable Type	no. of conductors	cross-section	cable length	function text
=E1+TMA-AZ-CS-CBT-0101-321W2	SUPER-PAAR-TRONIC 340-C-PUR 1x2x0,34 mm²	2	0,34		PHASE PMC COOLING CIRCUIT OUT PRESURE

function text	X-Ref	Connected to	Pin	conductor	Connected to	Pin	X-Ref
PHASE PMC CABINET OUT PRESSURE	/321.4	-X12	4C	**WH**	-220A30	2:23	/233.4
=	/321.3	-X12	4B	**BN**	-220A30	2:33	/233.4
PHASE PMC COOLING CIRCUIT OUT PRESURE	/321.4	-321W2		**SH**	-321W2-SH		/233.5

IK4 TEKNIKER Research Alliance

IK4-TEKNIKER
AVDA. OTAOLA 20
20600 Eibar (Gipuzkoa) Spain
Tfno.:(+34) 943 206744
Fax: (+34) 943 202757
Web: www.tekniker.es

Date	23/02/2017						
Reviewed	F.LÓPEZ	2.3	15/12/2017	JOSE MANUEL			
Drew by	jcastano	Review	Date	Name	Review	Date	Name

3151_LSST

MCS Design Electrical Schematics

LSST TELESCOPE

Replaces

Replaced by

Cable diagram
=E1+TMA-AZ-CS-CBT-0101-321W2

Customer:

EMPRESARIOS AGRUPADOS

EMPRESARIOS AGRUPADOS
C/Magallanes, 3
28015 MADRID
91 3098000

http://www.empresariosagrupados.es/

= REPORT

+ TMA-AZ-CS-CBT-0101

Cable diagram

F09_001_TK1

Cable ID	Cable Type	no. of conductors	cross-section	cable length	function text
=E1+TMA-AZ-CS-CBT-0101-321W3	SUPER-PAAR-TRONIC 340-C-PUR 1x2x0,34 mm²	2	0,34		CAMERA OUT COOLING CIRCUIT PRESSURE

function text	X-Ref	Connected to	Pin	conductor	Connected to	Pin	X-Ref
PRESION OUT CAMERA	/321.6	-X12	5C	**WH**	-220A30	3:24	/233.5
=	/321.6	-X12	5B	**BN**	-220A30	3:34	/233.5
CAMERA OUT COOLING CIRCUIT PRESSURE	/321.6	-321W3		**SH**	-321W3-SH		/233.6

IK4 TEKNIKER Research Alliance

IK4-TEKNIKER
AVDA. OTAOLA 20
20600 Eibar (Gipuzkoa) Spain
Tfno.:(+34) 943 206744
Fax: (+34) 943 202757
Web: www.tekniker.es

Date	23/02/2017						
Reviewed	F.LÓPEZ	2.3	15/12/2017	JOSE MANUEL			
Drew by	jcastano	Review	Date	Name	Review	Date	Name

3151_LSST

MCS Design Electrical Schematics

LSST TELESCOPE

Replaces

Replaced by

Cable diagram
=E1+TMA-AZ-CS-CBT-0101-321W3

Customer:

EMPRESARIOS AGRUPADOS

EMPRESARIOS AGRUPADOS
C/Magallanes, 3
28015 MADRID
91 3098000

http://www.empresariosagrupados.es/

= REPORT

+ TMA-AZ-CS-CBT-0101

Cable diagram

F09_001_TK1

Cable ID	Cable Type	no. of conductors	cross-section	cable length	function text
=E1+TMA-AZ-CS-CBT-0101-322W1	SUPER-PAAR-TRONIC 340-C-PUR 1x2x0,34 mm²	2	0,34		AZ 17-24 DRIVERS COOLING CIRCUIT OUT PRESSURE

function text	X-Ref	Connected to	Pin	conductor	Connected to	Pin	X-Ref
AZ 17-24 DRIVERS COOLING CIRCUIT OUT PRESSURE	/322.1	-X12	6C	**WH**	-220A30	3:25	/233.6
=	/322.1	-X12	6B	**BN**	-220A30	3:35	/233.6
=	/322.2	-322W1		**SH**	-322W1-SH		/233.6

IK4 TEKNIKER Research Alliance

IK4-TEKNIKER
AVDA. OTAOLA 20
20600 Eibar (Gipuzkoa) Spain
Tfno.:(+34) 943 206744
Fax: (+34) 943 202757
Web: www.tekniker.es

Date	23/02/2017						
Reviewed	F.LÓPEZ	2.3	15/12/2017	JOSE MANUEL			
Drew by	jcastano	Review	Date	Name	Review	Date	Name

3151_LSST

MCS Design Electrical Schematics

LSST TELESCOPE

Replaces

Replaced by

Cable diagram
=E1+TMA-AZ-CS-CBT-0101-322W1

Customer:

EMPRESARIOS AGRUPADOS

EMPRESARIOS AGRUPADOS
C/Magallanes, 3
28015 MADRID
91 3098000

http://www.empresariosagrupados.es/

= REPORT

+ TMA-AZ-CS-CBT-0101

Cable diagram

F09_001_TK1

Cable ID	Cable Type	no. of conductors	cross-section	cable length	function text
=E1+TMA-AZ-CS-CBT-0101-322W2	SUPER-PAAR-TRONIC 340-C-PUR 1x2x0,34 mm²	2	0,34		MCS AZ IO CABINET COOLING OUTLET PRESSURE

function text	X-Ref	Connected to	Pin	conductor	Connected to	Pin	X-Ref
MCS AZ IO CABINET COOLING OUTLET PRESSURE	/322.3	-X12	7C	**WH**	-220A30	4:26	/233.7
=	/322.3	-X12	7B	**BN**	-220A30	4:36	/233.7
=	/322.4	-322W2		**SH**	-322W2-SH		/233.7

IK4 TEKNIKER Research Alliance

IK4-TEKNIKER
AVDA. OTAOLA 20
20600 Eibar (Gipuzkoa) Spain
Tfno.:(+34) 943 206744
Fax: (+34) 943 202757
Web: www.tekniker.es

Date	23/02/2017						
Reviewed	F.LÓPEZ	2.3	15/12/2017	JOSE MANUEL			
Drew by	jcastano	Review	Date	Name	Review	Date	Name

3151_LSST

MCS Design Electrical Schematics

LSST TELESCOPE

Replaces

Replaced by

Cable diagram
=E1+TMA-AZ-CS-CBT-0101-322W2

Customer:

EMPRESARIOS AGRUPADOS

EMPRESARIOS AGRUPADOS
C/Magallanes, 3
28015 MADRID
91 3098000

http://www.empresariosagrupados.es/

= REPORT

+ TMA-AZ-CS-CBT-0101

Cable diagram

F09_001_TK1

Cable ID	Cable Type	no. of conductors	cross-section	cable length	function text
=E1+TMA-AZ-CS-CBT-0101-322W3	SUPER-PAAR-TRONIC 340-C-PUR 1x2x0,34 mm²	2	0,34		OSS EL BEARING IO -X COOLING OUTLET PRESSURE

function text	X-Ref	Connected to	Pin	conductor	Connected to	Pin	X-Ref
OSS EL BEARING IO -X COOLING OUTLET PRESSURE	/322.5	-X12	8C	**WH**	-220A30	4:27	/233.8
=	/322.5	-X12	8B	**BN**	-220A30	4:37	/233.8
=	/322.6	-322W3		**SH**	-322W3-SH		/233.8

IK4 TEKNIKER Research Alliance

IK4-TEKNIKER
AVDA. OTAOLA 20
20600 Eibar (Gipuzkoa) Spain
Tfno.:(+34) 943 206744
Fax: (+34) 943 202757
Web: www.tekniker.es

Date	23/02/2017						
Reviewed	F.LÓPEZ	2.3	15/12/2017	JOSE MANUEL			
Drew by	jcastano	Review	Date	Name	Review	Date	Name

3151_LSST

MCS Design Electrical Schematics

LSST TELESCOPE

Replaces

Replaced by

Cable diagram
=E1+TMA-AZ-CS-CBT-0101-322W3

Customer:

EMPRESARIOS AGRUPADOS

EMPRESARIOS AGRUPADOS
C/Magallanes, 3
28015 MADRID
91 3098000

http://www.empresariosagrupados.es/

= REPORT

+ TMA-AZ-CS-CBT-0101

Cable diagram

F09_001_TK1

Cable ID	Cable Type	no. of conductors	cross-section	cable length	function text
=E1+TMA-AZ-CS-CBT-0101-323W1	SUPER-PAAR-TRONIC 340-C-PUR 1x2x0,34 mm²	2	0,34		DRIVER AZ25-26 COOLING CIRCUIT OUT PRESSURE

function text	X-Ref	Connected to	Pin	conductor	Connected to	Pin	X-Ref
AZ 25-26 DRIVERS COOLING CIRCUIT OUT PRESSURE	/323.1	-X12	10C	**WH**	-220A31	1:21	/234.2
=	/323.1	-X12	10B	**BN**	-220A31	1:31	/234.3
DRIVER AZ25-26 COOLING CIRCUIT OUT PRESSURE	/323.2	-323W1		**SH**	-323W1-SH		/234.3

IK4 TEKNIKER Research Alliance

IK4-TEKNIKER
AVDA. OTAOLA 20
20600 Eibar (Gipuzkoa) Spain
Tfno.:(+34) 943 206744
Fax: (+34) 943 202757
Web: www.tekniker.es

Date	23/02/2017						
Reviewed	F.LÓPEZ	2.3	15/12/2017	JOSE MANUEL			
Drew by	jcastano	Review	Date	Name	Review	Date	Name

3151_LSST

MCS Design Electrical Schematics

LSST TELESCOPE

Replaces

Replaced by

Cable diagram
=E1+TMA-AZ-CS-CBT-0101-323W1

Customer:

EMPRESARIOS AGRUPADOS

EMPRESARIOS AGRUPADOS
C/Magallanes, 3
28015 MADRID
91 3098000

http://www.empresariosagrupados.es/

= REPORT

+ TMA-AZ-CS-CBT-0101

Cable diagram

F09_001_TK1

Cable ID	Cable Type	no. of conductors	cross-section	cable length	function text
=E1+TMA-AZ-CS-CBT-0101-323W2	SUPER-PAAR-TRONIC 340-C-PUR 1x2x0,34 mm²	2	0,34		DRIVER AZ27-28 COOLING CIRCUIT OUT PRESSURE

function text	X-Ref	Connected to	Pin	conductor	Connected to	Pin	X-Ref
AZ 27-28 DRIVERS COOLING CIRCUIT OUT PRESSURE	/323.3	-X12	11C	**WH**	-220A31	2:22	/234.3
=	/323.3	-X12	11B	**BN**	-220A31	2:32	/234.4
DRIVER AZ27-28 COOLING CIRCUIT OUT PRESSURE	/323.4	-323W2		**SH**	-323W2-SH		/234.4

◁ 3017

3019 ▷

IK4-TEKNIKER
AVDA. OTAOLA 20
20600 Eibar (Gipuzkoa) Spain
Tfno.:(+34) 943 206744
Fax: (+34) 943 202757
Web: www.tekniker.es

Date	23/02/2017						
Reviewed	F.LÓPEZ	2.3	15/12/2017	JOSE MANUEL			
Drew by	jcastano	Review	Date	Name	Review	Date	Name

3151_LSST — MCS Design Electrical Schematics
LSST TELESCOPE

Replaces — Replaced by

Cable diagram
=E1+TMA-AZ-CS-CBT-0101-323W2

Customer: EMPRESARIOS AGRUPADOS
C/Magallanes, 3
28015 MADRID
91 3098000
http://www.empresariosagrupados.es/

= REPORT
+ TMA-AZ-CS-CBT-0101

Cable diagram

F09_001_TK1

Cable ID	Cable Type	no. of conductors	cross-section	cable length	function text
=E1+TMA-AZ-CS-CBT-0101-323W3	SUPER-PAAR-TRONIC 340-C-PUR 1x2x0,34 mm²	2	0,34		DRIVER AZ29-30 COOLING CIRCUIT OUT PRESSURE

function text	X-Ref	Connected to	Pin	conductor	Connected to	Pin	X-Ref
AZ 29-30 DRIVERS COOLING CIRCUIT OUT PRESSURE	/323.5	-X12	12C	**WH**	-220A31	2:23	/234.4
=	/323.5	-X12	12B	**BN**	-220A31	2:33	/234.4
DRIVER AZ29-30 COOLING CIRCUIT OUT PRESSURE	/323.6	-323W3		**SH**	-323W3-SH		/234.5

◁ 3018

3020 ▷

IK4-TEKNIKER
AVDA. OTAOLA 20
20600 Eibar (Gipuzkoa) Spain
Tfno.:(+34) 943 206744
Fax: (+34) 943 202757
Web: www.tekniker.es

Date	23/02/2017						
Reviewed	F.LÓPEZ	2.3	15/12/2017	JOSE MANUEL			
Drew by	jcastano	Review	Date	Name	Review	Date	Name

3151_LSST — MCS Design Electrical Schematics
LSST TELESCOPE

Replaces | Replaced by

Cable diagram
=E1+TMA-AZ-CS-CBT-0101-323W3

Customer: EMPRESARIOS AGRUPADOS
C/Magallanes, 3
28015 MADRID
91 3098000
http://www.empresariosagrupados.es/

= REPORT
+ TMA-AZ-CS-CBT-0101

Cable diagram

F09_001_TK1

Cable ID	Cable Type	no. of conductors	cross-section	cable length	function text
=E1+TMA-AZ-CS-CBT-0101-323W4	SUPER-PAAR-TRONIC 340-C-PUR 1x2x0,34 mm²	2	0,34		DRIVER AZ31-32 COOLING CIRCUIT OUT PRESSURE

function text	X-Ref	Connected to	Pin	conductor	Connected to	Pin	X-Ref
AZ 31-32 DRIVERS COOLING CIRCUIT OUT PRESSURE	/323.8	-X12	13C	**WH**	-220A31	3:24	/234.5
=	/323.8	-X12	13B	**BN**	-220A31	3:34	/234.5
DRIVER AZ31-32 COOLING CIRCUIT OUT PRESSURE	/323.8	-323W4		**SH**	-323W4-SH		/234.6

◁ 3019

3021 ▷

IK4-TEKNIKER
AVDA. OTAOLA 20
20600 Eibar (Gipuzkoa) Spain
Tfno.:(+34) 943 206744
Fax: (+34) 943 202757
Web: www.tekniker.es

Date	23/02/2017						
Reviewed	F.LÓPEZ	2.3	15/12/2017	JOSE MANUEL			
Drew by	jcastano	Review	Date	Name	Review	Date	Name

3151_LSST — MCS Design Electrical Schematics
LSST TELESCOPE

Replaces | Replaced by

Cable diagram
=E1+TMA-AZ-CS-CBT-0101-323W4

Customer: EMPRESARIOS AGRUPADOS
C/Magallanes, 3
28015 MADRID
91 3098000
http://www.empresariosagrupados.es/

= REPORT
+ TMA-AZ-CS-CBT-0101

Cable diagram

F09_001_TK1

Cable ID	Cable Type	no. of conductors	cross-section	cable length	function text
=E1+TMA-AZ-CS-CBT-0101-324W1	SUPER-PAAR-TRONIC 340-C-PUR 1x2x0,34 mm²	2	0,34		DRIVER EL7-8 COOLING CIRCUIT OUT PRESSURE

function text	X-Ref	Connected to	Pin	conductor	Connected to	Pin	X-Ref
EL 7-8 DRIVERS COOLING CIRCUIT OUT PRESSURE	/324.1	-X12	14C	**WH**	-220A31	3:25	/234.6
=	/324.1	-X12	14B	**BN**	-220A31	3:35	/234.6
DRIVER EL7-8 COOLING CIRCUIT OUT PRESSURE	/324.2	-324W1		**SH**	-324W1-SH		/234.6

IK4 TEKNIKER Research Alliance

IK4-TEKNIKER
AVDA. OTAOLA 20
20600 Eibar (Gipuzkoa) Spain
Tfno.:(+34) 943 206744
Fax: (+34) 943 202757
Web: www.tekniker.es

Date	23/02/2017						
Reviewed	F.LÓPEZ	2.3	15/12/2017	JOSE MANUEL			
Drew by	jcastano	Review	Date	Name	Review	Date	Name

3151_LSST

MCS Design Electrical Schematics

LSST TELESCOPE

Replaces

Replaced by

Cable diagram
=E1+TMA-AZ-CS-CBT-0101-324W1

Customer:

EMPRESARIOS AGRUPADOS

EMPRESARIOS AGRUPADOS
C/Magallanes, 3
28015 MADRID
91 3098000

http://www.empresariosagrupados.es/

= REPORT

+ TMA-AZ-CS-CBT-0101

Cable diagram

F09_001_TK1

Cable ID	Cable Type	no. of conductors	cross-section	cable length	function text
=E1+TMA-AZ-CS-CBT-0101-324W2	SUPER-PAAR-TRONIC 340-C-PUR 1x2x0,34 mm²	2	0,34		DRIVER EL9-10 COOLING CIRCUIT OUT PRESSURE

function text	X-Ref	Connected to	Pin	conductor	Connected to	Pin	X-Ref
EL 9-10 DRIVERS COOLING CIRCUIT OUT PRESSURE	/324.4	-X12	15C	**WH**	-220A31	4:26	/234.7
=	/324.3	-X12	15B	**BN**	-220A31	4:36	/234.7
DRIVER EL9-10 COOLING CIRCUIT OUT PRESSURE	/324.4	-324W2		**SH**	-324W2-SH		/234.7

IK4 TEKNIKER Research Alliance

IK4-TEKNIKER
AVDA. OTAOLA 20
20600 Eibar (Gipuzkoa) Spain
Tfno.:(+34) 943 206744
Fax: (+34) 943 202757
Web: www.tekniker.es

Date	23/02/2017						
Reviewed	F.LÓPEZ	2.3	15/12/2017	JOSE MANUEL			
Drew by	jcastano	Review	Date	Name	Review	Date	Name

3151_LSST

MCS Design Electrical Schematics

LSST TELESCOPE

Replaces

Replaced by

Cable diagram
=E1+TMA-AZ-CS-CBT-0101-324W2

Customer:
EMPRESARIOS AGRUPADOS
C/Magallanes, 3
28015 MADRID
91 3098000
http://www.empresariosagrupados.es/

= REPORT

+ TMA-AZ-CS-CBT-0101

Cable diagram

F09_001_TK1

Cable ID	Cable Type	no. of conductors	cross-section	cable length	function text
=E1+TMA-AZ-CS-CBT-0101-324W3	SUPER-PAAR-TRONIC 340-C-PUR 1x2x0,34 mm²	2	0,34		DRIVER EL11-12 COOLING CIRCUIT OUT PRESSURE

function text	X-Ref	Connected to	Pin	conductor	Connected to	Pin	X-Ref
EL 11-12 DRIVERS COOLING CIRCUIT OUT PRESSURE	/324.6	-X12	16C	**WH**	-220A31	4:27	/234.8
=	/324.6	-X12	16B	**BN**	-220A31	4:37	/234.8
DRIVER EL11-12 COOLING CIRCUIT OUT PRESSURE	/324.7	-324W3		**SH**	-324W3-SH		/234.8

IK4 TEKNIKER Research Alliance

IK4-TEKNIKER
AVDA. OTAOLA 20
20600 Eibar (Gipuzkoa) Spain
Tfno.:(+34) 943 206744
Fax: (+34) 943 202757
Web: www.tekniker.es

Date	23/02/2017						
Reviewed	F.LÓPEZ	2.3	15/12/2017	JOSE MANUEL			
Drew by	jcastano	Review	Date	Name	Review	Date	Name

3151_LSST

MCS Design Electrical Schematics

LSST TELESCOPE

Replaces

Replaced by

Cable diagram
=E1+TMA-AZ-CS-CBT-0101-324W3

Customer:

EMPRESARIOS AGRUPADOS

EMPRESARIOS AGRUPADOS
C/Magallanes, 3
28015 MADRID
91 3098000

http://www.empresariosagrupados.es/

= REPORT

+ TMA-AZ-CS-CBT-0101

Cable diagram

F09_001_TK1

Cable ID	Cable Type	no. of conductors	cross-section	cable length	function text
=E1+TMA-AZ-CS-CBT-0101-325W1	SUPER-PAAR-TRONIC 340-C-PUR 1x2x0,34 mm²	2	0,34		GW EL CW COOLING CIRCUIT IN PRESSURE

function text	X-Ref	Connected to	Pin	conductor	Connected to	Pin	X-Ref
GW EL CW COOLING CIRCUIT IN PRESSURE	/325.3	-X12	17C	**WH**	-220A32	1:20	/235.1
=	/325.2	-X12	17B	**BN**	-220A32	1:30	/235.2
=	/325.3	-325W1		**SH**	-325W1-SH		/235.2

◁ 3023

3025 ▷

IK4-TEKNIKER
AVDA. OTAOLA 20
20600 Eibar (Gipuzkoa) Spain
Tfno.:(+34) 943 206744
Fax: (+34) 943 202757
Web: www.tekniker.es

Date	23/02/2017						
Reviewed	F.LÓPEZ	2.3	15/12/2017	JOSE MANUEL			
Drew by	jcastano	Review	Date	Name	Review	Date	Name

3151_LSST
MCS Design Electrical Schematics
LSST TELESCOPE

Replaces | Replaced by

Cable diagram
=E1+TMA-AZ-CS-CBT-0101-325W1

Customer: EMPRESARIOS AGRUPADOS
C/Magallanes, 3
28015 MADRID
91 3098000
http://www.empresariosagrupados.es/

= REPORT
+ TMA-AZ-CS-CBT-0101

Cable diagram

F09_001_TK1

Cable ID	Cable Type	no. of conductors	cross-section	cable length	function text
=E1+TMA-AZ-CS-CBT-0101-325W2	SUPER-PAAR-TRONIC 340-C-PUR 1x2x0,34 mm²	2	0,34		GW EL CW COOLING CIRCUIT OUT PRESSURE

function text	X-Ref	Connected to	Pin	conductor	Connected to	Pin	X-Ref
GW EL CW COOLING CIRCUIT OUT PRESSURE	/325.5	-X12	18C	**WH**	-220A32	1:21	/235.2
=	/325.5	-X12	18B	**BN**	-220A32	1:31	/235.3
=	/325.5	-325W2		**SH**	-325W2-SH		/235.3

IK4 TEKNIKER Research Alliance

IK4-TEKNIKER
AVDA. OTAOLA 20
20600 Eibar (Gipuzkoa) Spain
Tfno.:(+34) 943 206744
Fax: (+34) 943 202757
Web: www.tekniker.es

Date	23/02/2017						
Reviewed	F.LÓPEZ	2.3	15/12/2017	JOSE MANUEL			
Drew by	jcastano	Review	Date	Name	Review	Date	Name

3151_LSST

MCS Design Electrical Schematics

LSST TELESCOPE

Replaces

Replaced by

Cable diagram
=E1+TMA-AZ-CS-CBT-0101-325W2

Customer:

EMPRESARIOS AGRUPADOS

EMPRESARIOS AGRUPADOS
C/Magallanes, 3
28015 MADRID
91 3098000

http://www.empresariosagrupados.es/

= REPORT

+ TMA-AZ-CS-CBT-0101

Cable diagram

F09_001_TK1

Cable ID	Cable Type	no. of conductors	cross-section	cable length	function text
=E1+TMA-AZ-CS-CBT-0101-327W1	SUPER-PAAR-TRONIC 340-C-PUR 1x2x0,34 mm²	2	0,34		AZCW- AIR OUT PRESSURE

function text	X-Ref	Connected to	Pin	conductor	Connected to	Pin	X-Ref
AZCW-AIR OUT PRESSURE	/327.2	-X12	19C	**WH**	-220A33	1:20	/236.1
=	/327.1	-X12	19B	**BN**	-220A33	1:30	/236.2
AZCW- AIR OUT PRESSURE	/327.2	-327W1		**SH**	-327W1-SH		/236.2

IK4 TEKNIKER Research Alliance

IK4-TEKNIKER
AVDA. OTAOLA 20
20600 Eibar (Gipuzkoa) Spain
Tfno.:(+34) 943 206744
Fax: (+34) 943 202757
Web: www.tekniker.es

Date	23/02/2017						
Reviewed	F.LÓPEZ	2.3	15/12/2017	JOSE MANUEL			
Drew by	jcastano	Review	Date	Name	Review	Date	Name

3151_LSST

MCS Design Electrical Schematics

LSST TELESCOPE

Replaces

Replaced by

Cable diagram
=E1+TMA-AZ-CS-CBT-0101-327W1

Customer:

EMPRESARIOS AGRUPADOS

EMPRESARIOS AGRUPADOS
C/Magallanes, 3
28015 MADRID
91 3098000

http://www.empresariosagrupados.es/

= REPORT

+ TMA-AZ-CS-CBT-0101

Cable diagram

F09_001_TK1

Cable ID	Cable Type	no. of conductors	cross-section	cable length	function text
=E1+TMA-AZ-CS-CBT-0101-350W1	SUPER-PAAR-TRONIC 340-C-PUR 1x2x0,34 mm²	2	0,34		AZCW- COOLING CIRCUIT IN TEMPERATURE

function text	X-Ref	Connected to	Pin	conductor	Connected to	Pin	X-Ref
AZCW- COOLING IN TEMPERATURE	/350.1	-X12	21C	**WH**	-220A33	4:26	/236.6
=	/350.1	-X12	21B	**BN**	-220A33	4:36	/236.7
AZCW- COOLING CIRCUIT IN TEMPERATURE	/350.2	-350W1		**SH**	-350W1-SH		/236.7

IK4 TEKNIKER Research Alliance

IK4-TEKNIKER
AVDA. OTAOLA 20
20600 Eibar (Gipuzkoa) Spain
Tfno.:(+34) 943 206744
Fax: (+34) 943 202757
Web: www.tekniker.es

Date	23/02/2017						
Reviewed	F.LÓPEZ	2.3	15/12/2017	JOSE MANUEL			
Drew by	jcastano	Review	Date	Name	Review	Date	Name

3151_LSST

MCS Design Electrical Schematics

LSST TELESCOPE

Replaces

Replaced by

Cable diagram
=E1+TMA-AZ-CS-CBT-0101-350W1

Customer:

EMPRESARIOS AGRUPADOS

EMPRESARIOS AGRUPADOS
C/Magallanes, 3
28015 MADRID
91 3098000

http://www.empresariosagrupados.es/

= REPORT

+ TMA-AZ-CS-CBT-0101

Cable diagram

F09_001_TK1

Cable ID	Cable Type	no. of conductors	cross-section	cable length	function text
=E1+TMA-AZ-CS-CBT-0101-350W2	SUPER-PAAR-TRONIC 340-C-PUR 1x2x0,34 mm²	2	0,34		AZCW- COOLING CIRCUIT OUT TEMPERATURE

function text	X-Ref	Connected to	Pin	conductor	Connected to	Pin	X-Ref
AZCW- COOLING OUT TEMPERATURE	/350.5	-X12	22C	**WH**	-220A33	4:27	/236.7
=	/350.4	-X12	22B	**BN**	-220A33	4:37	/236.8
AZCW- COOLING CIRCUIT OUT TEMPERATURE	/350.5	-350W2		**SH**	-350W2-SH		/236.8

IK4 TEKNIKER Research Alliance

IK4-TEKNIKER
AVDA. OTAOLA 20
20600 Eibar (Gipuzkoa) Spain
Tfno.:(+34) 943 206744
Fax: (+34) 943 202757
Web: www.tekniker.es

Date	23/02/2017						
Reviewed	F.LÓPEZ	2.3	15/12/2017	JOSE MANUEL			
Drew by	jcastano	Review	Date	Name	Review	Date	Name

3151_LSST

MCS Design Electrical Schematics

LSST TELESCOPE

Replaces

Replaced by

Cable diagram
=E1+TMA-AZ-CS-CBT-0101-350W2

Customer:

EMPRESARIOS AGRUPADOS

EMPRESARIOS AGRUPADOS
C/Magallanes, 3
28015 MADRID
91 3098000

http://www.empresariosagrupados.es/

= REPORT

+ TMA-AZ-CS-CBT-0101

Cable diagram

F09_001_TK1

Cable ID	Cable Type	no. of conductors	cross-section	cable length	function text
=E1+TMA-AZ-CS-CBT-0101-630W2	SUPER-PAAR-TRONIC 340-C-PUR 1x2x0,34 mm²	2	0,34		AZ17-24 MISING VALVE POSITION

function text	X-Ref	Connected to	Pin	conductor	Connected to	Pin	X-Ref
AZIMUTH 17-24 MIXING VALVE	/630.3	-X10	13	**WH**	-220A32	3:05	/235.6
=	/630.2	-X10	12	**BN**	-220A32	3:15	/235.6
AZ17-24 MISING VALVE POSITION	/630.2	-630W2		**SH**	-630W2-SH		/235.6

IK4 TEKNIKER Research Alliance

IK4-TEKNIKER
AVDA. OTAOLA 20
20600 Eibar (Gipuzkoa) Spain
Tfno.:(+34) 943 206744
Fax: (+34) 943 202757
Web: www.tekniker.es

Date	23/02/2017						
Reviewed	F.LÓPEZ	2.3	15/12/2017	JOSE MANUEL			
Drew by	jcastano	Review	Date	Name	Review	Date	Name

3151_LSST

MCS Design Electrical Schematics

LSST TELESCOPE

Replaces

Replaced by

Cable diagram
=E1+TMA-AZ-CS-CBT-0101-630W2

Customer:

EMPRESARIOS AGRUPADOS

EMPRESARIOS AGRUPADOS
C/Magallanes, 3
28015 MADRID
91 3098000

http://www.empresariosagrupados.es/

= REPORT

+ TMA-AZ-CS-CBT-0101

Cable diagram

F09_001_TK1

Cable ID	Cable Type	no. of conductors	cross-section	cable length	function text
=E1+TMA-AZ-CS-CBT-0101-630W4	SUPER-PAAR-TRONIC 340-C-PUR 1x2x0,34 mm²	2	0,34		AZ25-32 MISING VALVE POSITION

function text	X-Ref	Connected to	Pin	conductor	Connected to	Pin	X-Ref
AZIMUTH 25-32 MIXING VALVE	/630.7	-X10	20	**WH**	-220A32	4:06	/235.7
=	/630.7	-X10	19	**BN**	-220A32	4:16	/235.7
AZ25-32 MISING VALVE POSITION	/630.7	-630W4		**SH**	-630W4-SH		/235.7

IK4 TEKNIKER Research Alliance

IK4-TEKNIKER
AVDA. OTAOLA 20
20600 Eibar (Gipuzkoa) Spain
Tfno.:(+34) 943 206744
Fax: (+34) 943 202757
Web: www.tekniker.es

Date	23/02/2017						
Reviewed	F.LÓPEZ	2.3	15/12/2017	JOSE MANUEL			
Drew by	jcastano	Review	Date	Name	Review	Date	Name

3151_LSST

MCS Design Electrical Schematics

LSST TELESCOPE

Replaces

Replaced by

Cable diagram
=E1+TMA-AZ-CS-CBT-0101-630W4

Customer:

EMPRESARIOS AGRUPADOS

EMPRESARIOS AGRUPADOS
C/Magallanes, 3
28015 MADRID
91 3098000

http://www.empresariosagrupados.es/

= REPORT

+ TMA-AZ-CS-CBT-0101

Cable diagram

F09_001_TK1

Cable ID	Cable Type	no. of conductors	cross-section	cable length	function text
=E1+TMA-AZ-CS-CBT-0101-631W2	SUPER-PAAR-TRONIC 340-C-PUR 1x2x0,34 mm²	2	0,34		EL7-12 MISING VALVE POSITION

function text	X-Ref	Connected to	Pin	conductor	Connected to	Pin	X-Ref
ELEVATION 7-12 MIXING VALVE	/631.5	-X10	27	**WH**	-220A32	4:07	/235.8
=	/631.4	-X10	26	**BN**	-220A32	4:17	/235.8
EL7-12 MISING VALVE POSITION	/631.4	-631W2		**SH**	-631W2-SH		/235.8

◁ 3030

+TMA-EL-CS-CBT-0101/001 ▷

IK4 TEKNIKER Research Alliance
IK4-TEKNIKER
AVDA. OTAOLA 20
20600 Eibar (Gipuzkoa) Spain
Tfno.:(+34) 943 206744
Fax: (+34) 943 202757
Web: www.tekniker.es

Date	23/02/2017						
Reviewed	F.LÓPEZ	2.3	15/12/2017	JOSE MANUEL			
Drew by	jcastano	Review	Date	Name	Review	Date	Name

3151_LSST

MCS Design Electrical Schematics

LSST TELESCOPE

Replaces

Replaced by

Cable diagram
=E1+TMA-AZ-CS-CBT-0101-631W2

Customer: EMPRESARIOS AGRUPADOS
C/Magallanes, 3
28015 MADRID
91 3098000
http://www.empresariosagrupados.es/

= REPORT
+ TMA-AZ-CS-CBT-0101

Customer

EMPRESARIOS AGRUPADOS

EMPRESARIOS AGRUPADOS
C/Magallanes, 3
28015 MADRID
ESPAÑA
91 3098000

http://www.empresariosagrupados.es/

Project:

3151_LSST
MCS Design Electrical Schematics
LSST TELESCOPE

REPORT
GENERAL REPORT

TMA-EL-CS-CBT-0101
AUXILIARY ELEVATION 1 BOX (+X)

Number of pages: 710

Made by:

IK4 TEKNIKER
Research Alliance

IK4-TEKNIKER
AVDA. OTAOLA 20
20600 Eibar (Gipuzkoa) Spain
Tfno. : (+34) 943 206744
Fax : (+34) 943 202757
Web: www.tekniker.es

Review	Review description	Date	Reviewed
2.3	VERSION INTERMEDIA PARA MONTAJE ASTURFEITO (SIN EVALUACIONES)	15/12/2017	JOSE MANUEL

Drew by: J.M.CASTAÑO

Reviewed: F.LÓPEZ

Date: 16/12/2015

Replaces:

Replaced by:

Parts list

TEKNIKER_v2

DEVICE TAG	PLACEMENT	DESCRIPTION	REFERENCE	MANUFACTURER
=E1-220A1	=E1/220.0	Bus coupler	AXL F BK EC 2688899	PHOENIX CONTACT
=E1-220A10	=E1/220.1	I/O module	2688022	PHOENIX CONTACT
=E1-220A20	=E1/220.3	I/O module	2700608	PHOENIX CONTACT
=E1-220A30	=E1/220.4	I/O module	2688064	PHOENIX CONTACT
=E1-220A31	=E1/220.5	I/O module	2688064	PHOENIX CONTACT
=E1-220A40	=E1 (EC3.S12)	I/O module	2688556	PHOENIX CONTACT
=E1-500A1	=E1/500.2	PSSu head module	PSSu H FS SN SDT 314 085	PILZ
=E1-500A1	=E1/500.2	TERMINALS	PSSu A Con 2/8 C 313 111	PILZ
=E1-500A10	=E1/500.4	Safety digital input module	PSSu E F 4DI-T 314 200	PILZ
=E1-500A10	=E1/500.4	Base module Cage clamp terminal	PSSu BP 1/8 C-T 314 601	PILZ
=E1-500A11	=E1/500.4	Safety digital input module	PSSu E F 4DI-T 314 200	PILZ
=E1-500A11	=E1/500.4	Base module Cage clamp terminal	PSSu BP 1/8 C-T 314 601	PILZ
=E1-500A12	=E1/500.4	Safety digital input module	PSSu E F 4DI-T 314 200	PILZ
=E1-500A12	=E1/500.4	Base module Cage clamp terminal	PSSu BP 1/8 C-T 314 601	PILZ
=E1-500A13	=E1/500.4	Safety digital input module	PSSu E F 4DI-T 314 200	PILZ
=E1-500A13	=E1/500.4	Base module Cage clamp terminal	PSSu BP 1/8 C-T 314 601	PILZ
=E1-500A14	=E1/500.4	Safety digital input module	PSSu E F 4DI-T 314 200	PILZ
=E1-500A14	=E1/500.4	Base module Cage clamp terminal	PSSu BP 1/8 C-T 314 601	PILZ
=E1-500A15	=E1/500.5	Safety digital input module	PSSu E F 4DI-T 314 200	PILZ
=E1-500A15	=E1/500.5	Base module Cage clamp terminal	PSSu BP 1/8 C-T 314 601	PILZ
=E1-500A16	=E1/500.5	Safety digital input module	PSSu E F 4DI-T 314 200	PILZ
=E1-500A16	=E1/500.5	Base module Cage clamp terminal	PSSu BP 1/8 C-T 314 601	PILZ
=E1-500A17	=E1/500.5	Safety digital input module	PSSu E F 4DI-T 314 200	PILZ
=E1-500A17	=E1/500.5	Base module Cage clamp terminal	PSSu BP 1/8 C-T 314 601	PILZ
=E1-500A30	=E1/500.5	Fail-safe I/O-Elektronic Module (Coated Version)	314210	PILZ
=E1-020F1	=E1/020.2	Miniature Circuit Breaker C 10A	A9F79310	SCHNEIDER ELECTRIC
=E1-026F1	=E1/026.2	Base element	2800929	PHOENIX CONTACT
=E1-026F1	=E1/026.2	Plug-in bridge	3030255	PHOENIX CONTACT
=E1-026F1	=E1/026.2	Plug-in bridge	3036958	PHOENIX CONTACT
=E1-026F1-F1	=E1/026.2	Thermomagnetic device circuit breaker	2800850	PHOENIX CONTACT
=E1-026F1-F1	=E1 (EC3.S12)	Electronic device circuit breaker	2800904	PHOENIX CONTACT
=E1-026F2	=E1/026.3	Base element	2800929	PHOENIX CONTACT
=E1-026F2-F2	=E1/026.3	Thermomagnetic device circuit breaker	2800854	PHOENIX CONTACT
=E1-026F2-F2	=E1 (EC3.S12)	Electronic device circuit breaker	2800907	PHOENIX CONTACT
=E1-020G1	=E1/020.1	Power supply unit	2866792	PHOENIX CONTACT
=E1-230K1	=E1/230.5	RIF-0 Base módule	2900958	PHOENIX CONTACT
=E1-230K1	=E1/230.5	Single relay	2961105	PHOENIX CONTACT
=E1-230K2	=E1/230.6	RIF-0 Base módule	2900958	PHOENIX CONTACT
=E1-230K2	=E1/230.6	Single relay	2961105	PHOENIX CONTACT

Parts list

TEKNIKER_v2

DEVICE TAG		PLACEMENT	DESCRIPTION	REFERENCE	MANUFACTURER
=E1-PE		=E1/701.2	earth busbar	550220 TCB 20x5	ERICO
=E1-PE		=E1 (EC3.S12)	earth busbar	550220 TCB 20x5	ERICO
=E1-222S1		=E1/222.6	Cabinet Door switch	SZ 4127.010	RITTAL
=E1-701SH1	1	=E1/701.4	Connection terminal block	0404017	PHOENIX CONTACT
=E1-701SH1	1	=E1/701.4	Support bracket	0404428	PHOENIX CONTACT
=E1-701SH1	1	=E1/701.4	Support bracket	0404428	PHOENIX CONTACT
=E1-701SH1	1	=E1/701.4	Neutral busbar	0402174	PHOENIX CONTACT
=E1-701SH1	1	=E1 (EC3.S12)	Support bracket	0404428	PHOENIX CONTACT
=E1-701SH1	1	=E1 (EC3.S12)	Support bracket	0404428	PHOENIX CONTACT
=E1-701SH1	1	=E1 (EC3.S12)	Neutral busbar	0402174	PHOENIX CONTACT
=E1-701SH1	1	=E1 (EC3.S12)	Support bracket	0404428	PHOENIX CONTACT
=E1-701SH2	1	=E1/701.4	Connection terminal block	0404017	PHOENIX CONTACT
=E1-701SH2	1	=E1/701.4	Support bracket	0404428	PHOENIX CONTACT
=E1-701SH2	1	=E1/701.4	Support bracket	0404428	PHOENIX CONTACT
=E1-701SH2	1	=E1/701.4	Neutral busbar	0402174	PHOENIX CONTACT
=E1-701SH2	1	=E1 (EC3.S12)	Support bracket	0404428	PHOENIX CONTACT
=E1-701SH2	1	=E1 (EC3.S12)	Neutral busbar	0402174	PHOENIX CONTACT
=E1-U1		=E1 (EC3.S12)	Mounting rail EN 50 022 (35x15)	TS 35_15	...
=E1-U2		=E1 (EC3.S12)	Mounting rail EN 50 022 (35x15)	TS 35_15	...
=E1-U3		=E1 (EC3.S12)	Mounting rail EN 50 022 (35x15)	TS 35_15	...
=E1-U50		=E1 (EC3.S12)	NSYS3D6G8630P	NSYS3D6G8630P	SCHNEIDER ELECTRIC
=E1-U100		=E1 (EC3.S12)	Unex slotted trunking 80x30 in U23X	80.30.77	UNEX
=E1-U101		=E1 (EC3.S12)	Unex slotted trunking 80x30 in U23X	80.30.77	UNEX
=E1-U102		=E1 (EC3.S12)	Unex slotted trunking 80x43 in U23X	80.40.77	UNEX
=E1-U103		=E1 (EC3.S12)	Unex slotted trunking 80x43 in U23X	80.40.77	UNEX
=E1-U104		=E1 (EC3.S12)	Unex slotted trunking 80x43 in U23X	80.40.77	UNEX
=E1-U105		=E1 (EC3.S12)	Unex slotted trunking 80x43 in U23X	80.40.77	UNEX
=E1-020U1		=E1/020.6	DC/DC CONVERTER	DDC1524S03 FARNELL: 2475871	XPPOWER
=E1-325U1		=E1/325.0	LUBRICATION SYSTEM	BKI 101 e	ATLANTA
=E1-325U2		=E1/325.4	LUBRICATION SYSTEM	BKI 101 e	ATLANTA
=E1-320W1		=E1/320.1	UL/CSA Control Cable JZ-602-CY 3G1 mm² GY	82980	HELUKABEL
=E1-320W2		=E1/320.3	UL/CSA Control Cable JZ-602-CY 3G1 mm² GY	82980	HELUKABEL
=E1-320W3		=E1/320.5	UL/CSA Control Cable JZ-602-CY 3G1 mm² GY	82980	HELUKABEL
=E1-320W4		=E1/320.7	UL/CSA Control Cable JZ-602-CY 3G1 mm² GY	82980	HELUKABEL
=E1-320W5A		=E1/320.1	UL/CSA Control Cable JZ-602-CY 18G1,5 mm² GY	82975	HELUKABEL
=E1-340W1		=E1/340.2	UL/CSA Cable for Drag Chains SUPER-PAAR-TRONIC 340-C-PUR 1x2x0,34 mm² (22 AWG) GY	49839	HELUKABEL
=E1-340W2		=E1/340.4	UL/CSA Cable for Drag Chains SUPER-PAAR-TRONIC 340-C-PUR 1x2x0,34 mm² (22 AWG) GY	49839	HELUKABEL
=E1-340W3		=E1/340.6	UL/CSA Cable for Drag Chains SUPER-PAAR-TRONIC 340-C-PUR 1x2x0,34 mm² (22 AWG) GY	49839	HELUKABEL
=E1-340W4		=E1/340.8	UL/CSA Cable for Drag Chains SUPER-PAAR-TRONIC 340-C-PUR 1x2x0,34 mm² (22 AWG) GY	49839	HELUKABEL

Parts list

TEKNIKER_v2

DEVICE TAG	PLACEMENT	DESCRIPTION	REFERENCE	MANUFACTURER
=E1-341W1	=E1/341.2	UL/CSA Cable for Drag Chains SUPER-PAAR-TRONIC 340-C-PUR 1x2x0,34 mm² (22 AWG) GY	49839	HELUKABEL
=E1-341W2	=E1/341.4	UL/CSA Cable for Drag Chains SUPER-PAAR-TRONIC 340-C-PUR 1x2x0,34 mm² (22 AWG) GY	49839	HELUKABEL
=E1-350W1	=E1/350.2	UL/CSA Cable for Drag Chains SUPER-PAAR-TRONIC 340-C-PUR 1x2x0,34 mm² (22 AWG) GY	49839	HELUKABEL
=E1-350W2	=E1/350.5	UL/CSA Cable for Drag Chains SUPER-PAAR-TRONIC 340-C-PUR 1x2x0,34 mm² (22 AWG) GY	49839	HELUKABEL
=E1-355W1	=E1/355.2	UL/CSA Cable for Drag Chains SUPER-PAAR-TRONIC 340-C-PUR 1x2x0,34 mm² (22 AWG) GY	49839	HELUKABEL
=E1-X1 1	=E1/020.2	Feed-through terminal block "Push-in" PT 2,5	3209510	PHOENIX CONTACT
=E1-X1 1	=E1/020.2	3 ST2,5 busbar	3030174	PHOENIX CONTACT
=E1-X1 2	=E1/020.2	Feed-through terminal block "Push-in" PT 2,5	3209510	PHOENIX CONTACT
=E1-X1 3	=E1/026.5	Feed-through terminal block "Push-in" PT 2,5	3209510	PHOENIX CONTACT
=E1-X1 4	=E1/020.2	Feed-through terminal block "Push-in" PT 2,5	3209510	PHOENIX CONTACT
=E1-X1 4	=E1/020.2	3 ST2,5 busbar	3030174	PHOENIX CONTACT
=E1-X1 5	=E1/020.2	Feed-through terminal block "Push-in" PT 2,5	3209510	PHOENIX CONTACT
=E1-X1 6	=E1/026.5	Feed-through terminal block "Push-in" PT 2,5	3209510	PHOENIX CONTACT
=E1-X1 7	=E1/020.6	Feed-through terminal block "Push-in" PT 2,5	3209510	PHOENIX CONTACT
=E1-X1 7	=E1/020.6	2 PT 1,5 busbar	FBS 2-3,5 3213014	PHOENIX CONTACT
=E1-X1 8	=E1/325.5	Feed-through terminal block PT 1,5/S	3208100	PHOENIX CONTACT
=E1-X1 9	=E1/020.6	Feed-through terminal block PT 1,5/S	3208100	PHOENIX CONTACT
=E1-X1 9	=E1/020.6	2 PT 1,5 busbar	FBS 2-3,5 3213014	PHOENIX CONTACT
=E1-X1 10	=E1/325.5	Feed-through terminal block PT 1,5/S	3208100	PHOENIX CONTACT
=E1-X1 11	=E1/026.2	Feed-through terminal block "Push-in" PT 2,5	3209510	PHOENIX CONTACT
=E1-X1 11	=E1/026.2	2,5/4-1,5/S reduction busbar	3214356	PHOENIX CONTACT
=E1-X1 12	=E1/020.7	Feed-through terminal block PT 1,5/S	3208100	PHOENIX CONTACT
=E1-X1 12	=E1/020.7	5 PT1,5 busbar	3213043	PHOENIX CONTACT
=E1-X1 13	=E1/233.1	Feed-through terminal block PT 1,5/S	3208100	PHOENIX CONTACT
=E1-X1 14	=E1/340.0	Feed-through terminal block PT 1,5/S	3208100	PHOENIX CONTACT
=E1-X1 15	=E1/502.3	Feed-through terminal block PT 1,5/S	3208100	PHOENIX CONTACT
=E1-X1 16	=E1/502.4	Feed-through terminal block PT 1,5/S	3208100	PHOENIX CONTACT
=E1-X1 17	=E1/026.2	Feed-through terminal block "Push-in" PT 2,5	3209510	PHOENIX CONTACT
=E1-X1 17	=E1/026.2	5 PT1,5 busbar	3213043	PHOENIX CONTACT
=E1-X1 18	=E1/020.7	Feed-through terminal block PT 1,5/S	3208100	PHOENIX CONTACT
=E1-X1 18	=E1/020.7	5 PT1,5 busbar	3213043	PHOENIX CONTACT
=E1-X1 19	=E1/255.1	Feed-through terminal block PT 1,5/S	3208100	PHOENIX CONTACT
=E1-X1 20	=E1/502.3	Feed-through terminal block PT 1,5/S	3208100	PHOENIX CONTACT
=E1-X1 21	=E1/502.4	Feed-through terminal block PT 1,5/S	3208100	PHOENIX CONTACT
=E1-X1 22	=E1/502.4	Feed-through terminal block PT 1,5/S	3208100	PHOENIX CONTACT
=E1-X1 23	=E1/026.3	Feed-through terminal block "Push-in" PT 2,5	3209510	PHOENIX CONTACT
=E1-X1 23	=E1/026.3	2,5/4-1,5/S reduction busbar	3214356	PHOENIX CONTACT
=E1-X1 24	=E1/230.4	Feed-through terminal block PT 1,5/S	3208100	PHOENIX CONTACT
=E1-X1 24	=E1/230.4	3 pt-1,5 busbar	3213027	PHOENIX CONTACT

Parts list

TEKNIKER_v2

DEVICE TAG		PLACEMENT	DESCRIPTION	REFERENCE	MANUFACTURER
=E1-X1	25	=E1/320.3	Feed-through terminal block PT 1,5/S	3208100	PHOENIX CONTACT
=E1-X1	25	=E1/320.3	3 pt-1,5 busbar	3213027	PHOENIX CONTACT
=E1-X1	26	=E1/502.5	Feed-through terminal block PT 1,5/S	3208100	PHOENIX CONTACT
=E1-X1	27	=E1/026.3	Feed-through terminal block "Push-in" PT 2,5	3209510	PHOENIX CONTACT
=E1-X1	27	=E1/026.3	2,5/4-1,5/S reduction busbar	3214356	PHOENIX CONTACT
=E1-X1	28	=E1/230.4	Feed-through terminal block PT 1,5/S	3208100	PHOENIX CONTACT
=E1-X1	28	=E1/230.4	3 pt-1,5 busbar	3213027	PHOENIX CONTACT
=E1-X1	29	=E1/320.5	Feed-through terminal block PT 1,5/S	3208100	PHOENIX CONTACT
=E1-X1	30	=E1/502.5	Feed-through terminal block PT 1,5/S	3208100	PHOENIX CONTACT
=E1-X10	1	=E1/701.2	Feed-through terminal block "Push-in" PT 2,5	3209510	PHOENIX CONTACT
=E1-X10	1	=E1/701.2	2 ST2,5 busbar	3030161	PHOENIX CONTACT
=E1-X10	2	=E1/020.5	Feed-through terminal block "Push-in" PT 2,5	3209510	PHOENIX CONTACT
=E1-X10	3	=E1/701.2	Feed-through terminal block "Push-in" PT 2,5	3209510	PHOENIX CONTACT
=E1-X10	3	=E1/701.2	2 ST2,5 busbar	3030161	PHOENIX CONTACT
=E1-X10	4	=E1/020.5	Feed-through terminal block "Push-in" PT 2,5	3209510	PHOENIX CONTACT
=E1-X10	5	=E1/701.2	Feed-through terminal block "Push-in" PT 2,5	3209510	PHOENIX CONTACT
=E1-X10	5	=E1/701.2	2 ST2,5 busbar	3030161	PHOENIX CONTACT
=E1-X10	6	=E1/020.5	Feed-through terminal block "Push-in" PT 2,5	3209510	PHOENIX CONTACT
=E1-X10	7	=E1/255.1	Feed-through terminal block PT 1,5/S	3208100	PHOENIX CONTACT
=E1-X10	8	=E1/255.1	Feed-through terminal block PT 1,5/S	3208100	PHOENIX CONTACT
=E1-X10	9	=E1/255.2	Feed-through terminal block PT 1,5/S	3208100	PHOENIX CONTACT
=E1-X10	10	=E1/255.2	Feed-through terminal block PT 1,5/S	3208100	PHOENIX CONTACT
=E1-X10	11	=E1/255.2	Feed-through terminal block PT 1,5/S	3208100	PHOENIX CONTACT
=E1-X10	12	=E1/255.2	Feed-through terminal block PT 1,5/S	3208100	PHOENIX CONTACT
=E1-X10	13	=E1/255.2	Feed-through terminal block PT 1,5/S	3208100	PHOENIX CONTACT
=E1-X10	14	=E1/255.2	Feed-through terminal block PT 1,5/S	3208100	PHOENIX CONTACT
=E1-X10	15	=E1/255.3	Feed-through terminal block PT 1,5/S	3208100	PHOENIX CONTACT
=E1-X10	16	=E1/255.3	Feed-through terminal block PT 1,5/S	3208100	PHOENIX CONTACT
=E1-X10	17	=E1/255.3	Feed-through terminal block PT 1,5/S	3208100	PHOENIX CONTACT
=E1-X10	18	=E1/255.3	Feed-through terminal block PT 1,5/S	3208100	PHOENIX CONTACT
=E1-X10	19	=E1/320.1	Feed-through terminal block PT 1,5/S	3208100	PHOENIX CONTACT
=E1-X10	20	=E1/320.1	Feed-through terminal block PT 1,5/S	3208100	PHOENIX CONTACT
=E1-X10	21	=E1/320.1	Feed-through terminal block PT 1,5/S	3208100	PHOENIX CONTACT
=E1-X10	22	=E1/320.4	Feed-through terminal block PT 1,5/S	3208100	PHOENIX CONTACT
=E1-X10	23	=E1/320.6	Feed-through terminal block PT 1,5/S	3208100	PHOENIX CONTACT
=E1-X10	24	=E1/320.8	Feed-through terminal block PT 1,5/S	3208100	PHOENIX CONTACT
=E1-X10	25	=E1/325.0	Feed-through terminal block PT 1,5/S	3208100	PHOENIX CONTACT
=E1-X10	26	=E1/325.1	Feed-through terminal block PT 1,5/S	3208100	PHOENIX CONTACT
=E1-X10	27	=E1/325.1	Feed-through terminal block PT 1,5/S	3208100	PHOENIX CONTACT

Parts list

TEKNIKER_v2

DEVICE TAG	PLACEMENT	DESCRIPTION	REFERENCE	MANUFACTURER
=E1-X10 28	=E1/325.1	Feed-through terminal block PT 1,5/S	3208100	PHOENIX CONTACT
=E1-X10 29	=E1/325.2	Feed-through terminal block PT 1,5/S	3208100	PHOENIX CONTACT
=E1-X10 30	=E1/325.5	Feed-through terminal block PT 1,5/S	3208100	PHOENIX CONTACT
=E1-X10 31	=E1/325.5	Feed-through terminal block PT 1,5/S	3208100	PHOENIX CONTACT
=E1-X10 32	=E1/325.6	Feed-through terminal block PT 1,5/S	3208100	PHOENIX CONTACT
=E1-X10 33	=E1/325.7	Feed-through terminal block PT 1,5/S	3208100	PHOENIX CONTACT
=E1-X10 34	=E1/353.3	Feed-through terminal block PT 1,5/S	3208100	PHOENIX CONTACT
=E1-X10 35	=E1/353.3	Feed-through terminal block PT 1,5/S	3208100	PHOENIX CONTACT
=E1-X10 36	=E1/353.4	Feed-through terminal block PT 1,5/S	3208100	PHOENIX CONTACT
=E1-X10 37	=E1/353.4	Feed-through terminal block PT 1,5/S	3208100	PHOENIX CONTACT
=E1-X10 38	=E1/353.5	Feed-through terminal block PT 1,5/S	3208100	PHOENIX CONTACT
=E1-X10 39	=E1/353.5	Feed-through terminal block PT 1,5/S	3208100	PHOENIX CONTACT
=E1-X10 40	=E1/353.6	Feed-through terminal block PT 1,5/S	3208100	PHOENIX CONTACT
=E1-X12 1A	=E1/340.1	Multi-level terminal block PT1,5/S	3213713	PHOENIX CONTACT
=E1-X12 2A	=E1/340.3	Multi-level terminal block PT1,5/S	3213713	PHOENIX CONTACT
=E1-X12 3A	=E1/340.5	Multi-level terminal block PT1,5/S	3213713	PHOENIX CONTACT
=E1-X12 4A	=E1/340.8	Multi-level terminal block PT1,5/S	3213713	PHOENIX CONTACT
=E1-X12 5A	=E1/341.1	Multi-level terminal block PT1,5/S	3213713	PHOENIX CONTACT
=E1-X12 6A	=E1/341.3	Multi-level terminal block PT1,5/S	3213713	PHOENIX CONTACT
=E1-X12 7A	=E1/350.1	Multi-level terminal block PT1,5/S	3213713	PHOENIX CONTACT
=E1-X12 8A	=E1/350.4	Multi-level terminal block PT1,5/S	3213713	PHOENIX CONTACT
=E1-X12 9A	=E1/355.1	Multi-level terminal block PT1,5/S	3213713	PHOENIX CONTACT
=E1-320X1F	=E1/320.0	Extension, central mount 16 Pin socket "E" Type	A KU A 164 FS 04 73 0113 000	INTERCONTEC
=E1-320X1M	=E1/320.0	16 PIN PLUG CONNECTOR "P" TYPE	A ST A 163 MS 06 73 0100 000	INTERCONTEC

Terminal diagram

F13_001_TK_V2

Strip

=E1+TMA-EL-CS-CBT-0101-X1

distribution terminal block

Function text	Target designation	Connection point	Terminal	Jumper	Wire	Target designation	Connection point	Page / column
24VDC EL1	-026F1	1	1		+V15	+V15		/020.2
=	-026F2	1	2		+V15	+V15		/020.2
=			3		+V15			/026.5
=			4		0V15	0V15		/020.2
=			5		0V15	0V15		/020.2
=			6		0V15			/026.5
3,3VDC EL1	-X10	25	7		V21	+V21		/020.6
=			8		V21			/325.5
=	-X10	26	9		0V21	0V21		/020.6
=			10		0V21			/325.5
24VDC CONTROL EL1			11		+V16	-026F1	2.1	/026.2
=	-220A1	Ul:a1	12		+V16	-020U1-VIN	1	/020.7
=	-X10	7	13		+V16	-220A30	Ul:a1	/233.1
=	-X12	1A	14		+V16			/340.0
=			15		+V16	-500A1-X1	X1	/502.3
=			16		+V16			/502.4
=			17		0V16			/026.2
=	-220A1	Ul:b1	18		0V16	-020U1-VIN	2	/020.7
=	-X10	8	19		0V16	-220A30	Ul:b1	/255.1
=	-500A1-X1	X1	20		0V16	-X12	1B	/502.3
=			21		0V16			/502.4
=			22		0V16			/502.4
24VDC I/Os			23		+V17	-026F2	2.1	/026.3
=	-220A20	3:22	24		+V17	-220A10	UIO:a1	/230.4
=	-230K1	11	25		+V17	-X10	19	/320.3
=			26		+V17	-500A1-X2	X2	/502.5
=			27		0V17			/026.3
=	-230K1	A2	28		0V17	-220A10	UIO:b1	/230.4
24VDC CONTROL EL1	-X10	40	29		0V17	-X10	20	/320.5
24VDC I/Os			30		0V17	-500A1-X2	X2	/502.5

IK4 TEKNIKER Research Alliance

IK4-TEKNIKER
AVDA. OTAOLA 20
20600 Eibar (Gipuzkoa) Spain
Tfno.:(+34) 943 206744
Fax: (+34) 943 202757
Web: www.tekniker.es

Date	23/02/2017							
Reviewed	F.LÓPEZ	2.3	15/12/2017	JOSE MANUEL				
Drew by	jcastano	Review	Date	Name	Review	Date	Name	

3151_LSST

MCS Design Electrical Schematics

LSST TELESCOPE

Replaces | Replaced by

Terminal diagram
=E1+TMA-EL-CS-CBT-0101-X1

Customer: EMPRESARIOS AGRUPADOS
C/Magallanes, 3
28015 MADRID
91 3098000
http://www.empresariosagrupados.es/

= REPORT
+ TMA-EL-CS-CBT-0101

Terminal diagram

F13_001_TK_V2

Strip

=E1+TMA-EL-CS-CBT-0101-X10

FIELD terminal block

Function text	+TMA_E-353W3	+TMA_E-320W5	+TMA_E-255W7	Cable name	Target designation	Connection point	Terminal	Jumper	Wire	Target designation	Connection point	Cable name	+TMA_E-701W3A	Page / column
	SHIELDED 7x1	SHIELDED 16G1,5	Shielded LiY-CY 12x1	Cable type								Cable type	SHIELDED 4G2,5	
400V 50Hz EL1					-020F1	1	1			+TMA-EL-UC-EC3-X5			1	/701.2
=							2							/020.5
=					-020F1	3	3			+TMA-EL-UC-EC3-X5			2	/701.2
=							4							/020.5
=					-020F1	5	5			+TMA-EL-UC-EC3-X5			3	/701.2
=							6							/020.5
HANDHELD			WH		+TMA-EL-CS-CBT-0103-255U1-X1	1	7		*+V16*	-X1	13			/255.1
=			BN		+TMA-EL-CS-CBT-0103-255U1-X1	2	8		*0V16*	-X1	19			/255.1
=			GN		+TMA-EL-CS-CBT-0103-255U1-X1	3	9		*516.13*	-500A16	12			/255.2
=			YE		+TMA-EL-CS-CBT-0103-255U1-X1	4	10		*E706.0*	-500A16	11			/255.2
=			GY		+TMA-EL-CS-CBT-0103-255U1-X1	5	11		*516.14*	-500A16	13			/255.2
=			PK		+TMA-EL-CS-CBT-0103-255U1-X1	6	12		*E706.1*	-500A16	14			/255.2
=			BU		+TMA-EL-CS-CBT-0103-255U1-X1	7	13		*516.15*	-500A16	22			/255.2
=			RD		+TMA-EL-CS-CBT-0103-255U1-X1	8	14		*E706.2*	-500A16	21			/255.2
=			BK		+TMA-EL-CS-CBT-0103-255U1-X1	9	15		*516.16*	-500A16	23			/255.3
=			VT		+TMA-EL-CS-CBT-0103-255U1-X1	10	16		*E706.3*	-500A16	24			/255.3
=			GY/PK		+TMA-EL-CS-CBT-0103-X1	1	17		*513.01*	-500A13	22			/255.3
=			RD/BU		+TMA-EL-CS-CBT-0103-X1	2	18		*E703.2*	-500A13	21			/255.3
CCW LIMIT SWITCHES		1			-320X1F	1	19			-X1	25			/320.1
=		2			-320X1F	2	20			-X1	29			/320.1
=		3			-320X1F	3	21		*E300.1*	-220A10	UIO:01			/320.1
=		4			-320X1F	4	22		*E300.2*	-220A10	UIO:02			/320.4
=		5			-320X1F	5	23		*E707.0*	-500A17	11			/320.6
=		6			-320X1F	6	24		*E707.1*	-500A17	14			/320.8
CCW LUBRICATION		7			-320X1F	7	25		*V21*	-X1	7			/325.0
=		8			-320X1F	8	26		*0V21*	-X1	9			/325.1
=		9			-320X1F	9	27		*A300.0*	-220A20	1:10			/325.1
=		10			-320X1F	10	28			-220A20	1:20			/325.1
=		11			-320X1F	11	29		*E300.3*	-220A10	UIO:03			/325.2
=		12			-320X1F	12	30		*A300.1*	-220A20	2:11			/325.5
=		13			-320X1F	13	31			-220A20	2:21			/325.5
=		14			-320X1F	14	32		*E300.4*	-220A10	UIO:04			/325.6
=		15			-320X1F	15	33							/325.7
ELEVATION +X PANEL SIGNALS	1				+TMA-EL-PD-CBT-0001-K1	13	34		*222.01*	-220A10	UIO:16			/353.3
=	2				+TMA-EL-PD-CBT-0001-K1	14	35		*E300.6*	-220A10	UIO:06			/353.3

IK4 TEKNIKER Research Alliance

IK4-TEKNIKER
AVDA. OTAOLA 20
20600 Eibar (Gipuzkoa) Spain
Tfno.:(+34) 943 206744
Fax: (+34) 943 202757
Web: www.tekniker.es

Date	23/02/2017					
Reviewed	F.LÓPEZ	2.3	15/12/2017	JOSE MANUEL		
Drew by	jcastano	Review	Date	Name	Review	Date	Name

3151_LSST

MCS Design Electrical Schematics

LSST TELESCOPE

Replaces | Replaced by

Terminal diagram
=E1+TMA-EL-CS-CBT-0101-X10

Customer: EMPRESARIOS AGRUPADOS
C/Magallanes, 3
28015 MADRID
91 3098000
http://www.empresariosagrupados.es/

= REPORT

+ TMA-EL-CS-CBT-0101

Terminal diagram

F13_001_TK_V2

Strip

=E1+TMA-EL-CS-CBT-0101-X10

FIELD terminal block

Function text								+TMA_E-353W3	Cable name	Target designation	Connection point	Terminal	Jumper	Wire	Target designation	Connection point	Cable name					Page / column
								SHIELDED 7x1	Cable type								Cable type					
ELEVATION +X PANEL SIGNALS								3		+TMA-EL-PD-CBT-0001-K2	13	36	,	222.02	-220A10	UIO:17						/353.4
=								4		+TMA-EL-PD-CBT-0001-K2	14	37	,	E300.7	-220A10	UIO:07						/353.4
=								5		+TMA-EL-PD-CBT-0001-K2	OPEN	38	,	353.01	-230K1	14						/353.5
=								6		+TMA-EL-PD-CBT-0001-K2	CLOSED	39	,	353.02	-230K2	14						/353.5
=								7		+TMA-EL-PD-CBT-0001-K2	COM	40	,	0V17	-X1	29						/353.6

IK4-TEKNIKER
AVDA. OTAOLA 20
20600 Eibar (Gipuzkoa) Spain
Tfno.:(+34) 943 206744
Fax: (+34) 943 202757
Web: www.tekniker.es

Date	23/02/2017							
Reviewed	F.LÓPEZ	2.3	15/12/2017	JOSE MANUEL				
Drew by	jcastano	Review	Date	Name	Review	Date	Name	

3151_LSST

MCS Design Electrical Schematics

LSST TELESCOPE

Replaces | Replaced by

Terminal diagram
=E1+TMA-EL-CS-CBT-0101-X10

Customer: EMPRESARIOS AGRUPADOS
C/Magallanes, 3
28015 MADRID
91 3098000
http://www.empresariosagrupados.es/

= REPORT

+ TMA-EL-CS-CBT-0101

Terminal diagram

F13_001_TK_V2

Strip

=E1+TMA-EL-CS-CBT-0101-X12

4-20mA SENSORS

Function text				+TMA_E-341W1	+TMA_E-340W6	+TMA_E-340W5	+TMA_E-340W4	+TMA_E-340W3	Cable name	Target designation	Connection point	Terminal	Jumper	Wire	Target designation	Connection point	Cable name	-340W1	-340W2	-340W3	-340W4	Page / column
				LiCYC 2x0,34	LiCYC 2x0,34	LiCYC 2x0,34	LiCYC 2x0,34	LiCYC 2x0,34	Cable type								Cable type	SUPER-PAAR-TRONIC 340-C-PUR 1x2x0,34 mm²	SUPER-PAAR-TRONIC 340-C-PUR 1x2x0,34 mm²	SUPER-PAAR-TRONIC 340-C-PUR 1x2x0,34 mm²	SUPER-PAAR-TRONIC 340-C-PUR 1x2x0,34 mm²	
EL CW COOLING CIRCUIT OUT PRESSURE								WH		+TMA_E-340X3	1	1A		+V16	-X1	14						/340.1
=										-X1	20	1B			-220A30	1:30		BN				/340.1
=								BN		+TMA_E-340X3	3	1C			-220A30	1:20		WH				/340.1
EL CW COOLING CIRCUIT IN PRESSURE							WH			+TMA_E-340X4	1	2A										/340.3
=												2B			-220A30	1:31			BN			/340.3
=							BN			+TMA_E-340X4	3	2C			-220A30	1:21			WH			/340.3
EL CCW COOLING CIRCUIT IN PRESSURE						WH				+TMA_E-340X5	1	3A										/340.5
=												3B			-220A30	2:32				BN		/340.6
=						BN				+TMA_E-340X5	3	3C			-220A30	2:22				WH		/340.6
EL CCW COOLING CIRCUIT OUT PRESSURE					WH					+TMA_E-340X6	1	4A										/340.8
=												4B			-220A30	2:33					BN	/340.8
=					BN					+TMA_E-340X6	3	4C			-220A30	2:23					WH	/340.8
CHILLER COOLING CIRCUIT OUT PRESSURE				WH						+TMA_E-341X1	1	5A										/341.1

◁ 2002.a

2003.a ▷

IK4-TEKNIKER
AVDA. OTAOLA 20
20600 Eibar (Gipuzkoa) Spain
Tfno.:(+34) 943 206744
Fax: (+34) 943 202757
Web: www.tekniker.es

Date	23/02/2017							
Reviewed	F.LÓPEZ	2.3	15/12/2017	JOSE MANUEL				
Drew by	jcastano	Review	Date	Name	Review	Date	Name	

3151_LSST
MCS Design Electrical Schematics
LSST TELESCOPE

Replaces | Replaced by

Terminal diagram
=E1+TMA-EL-CS-CBT-0101-X12

Customer: EMPRESARIOS AGRUPADOS
C/Magallanes, 3
28015 MADRID
91 3098000
http://www.empresariosagrupados.es/

= REPORT
+ TMA-EL-CS-CBT-0101

Terminal diagram

F13_001_TK_V2

Strip

=E1+TMA-EL-CS-CBT-0101-X12

4-20mA SENSORS

Function text				+TMA_E-355W1	+TMA_E-350W6	+TMA_E-350W5	+TMA_E-341W2	+TMA_E-341W1	Cable name	Target designation	Connection point	Terminal	Jumper	Wire	Target designation	Connection point	Cable name	-341W1	-341W2	-350W1	-350W2	Page / column
				LiCYC 2x0,34	LiCYC 2x0,34	LiCYC 2x0,34	LiCYC 2x0,34	LiCYC 2x0,34	Cable type								Cable type	SUPER-PAAR-TRONIC 340-C-PUR 1x2x0,34 mm²	SUPER-PAAR-TRONIC 340-C-PUR 1x2x0,34 mm²	SUPER-PAAR-TRONIC 340-C-PUR 1x2x0,34 mm²	SUPER-PAAR-TRONIC 340-C-PUR 1x2x0,34 mm²	
CHILLER COOLING CIRCUIT OUT PRESSURE												5B			-220A30	3:34		BN				/341.1
=								BN		+TMA_E-341X1	3	5C			-220A30	3:24		WH				/341.1
CPM-005 COOLING CIRCUIT PRESSURE							WH			+TMA_E-341X2	1	6A										/341.3
=												6B			-220A30	3:35			BN			/341.3
=							BN			+TMA_E-341X2	3	6C			-220A30	3:25			WH			/341.3
TEMPERATURA OUT REFRIGERACION CCW						WH				+TMA_E-350B5	+	7A										/350.1
=												7B			-220A31	1:30				BN		/350.1
=						BN				+TMA_E-350B5	-	7C			-220A31	1:20				WH		/350.1
CHILLER COOLING CIRCUIT OUT TEMPERATURE					WH					+TMA_E-350B6	+	8A										/350.4
=												8B			-220A31	1:31					BN	/350.4
=					BN					+TMA_E-350B6	-	8C			-220A31	1:21					WH	/350.5
ECW+X compressed air outlet pressure				WH						+TMA_E-355X1	1	9A										/355.1

◁ 2003

2003.b ▷

IK4-TEKNIKER
AVDA. OTAOLA 20
20600 Eibar (Gipuzkoa) Spain
Tfno.:(+34) 943 206744
Fax: (+34) 943 202757
Web: www.tekniker.es

Date	23/02/2017							
Reviewed	F.LÓPEZ	2.3	15/12/2017	JOSE MANUEL				
Drew by	jcastano	Review	Date	Name	Review	Date	Name	

3151_LSST

MCS Design Electrical Schematics

LSST TELESCOPE

Replaces | Replaced by

Terminal diagram
=E1+TMA-EL-CS-CBT-0101-X12

Customer: EMPRESARIOS AGRUPADOS
C/Magallanes, 3
28015 MADRID
91 3098000
http://www.empresariosagrupados.es/

= REPORT
+ TMA-EL-CS-CBT-0101

Terminal diagram

F13_001_TK_V2

Strip

=E1+TMA-EL-CS-CBT-0101-X12

4-20mA SENSORS

Function text								+ TMA_E-355W1	Cable name	Target designation	Connection point	Terminal	Jumper	Wire	Target designation	Connection point	Cable name	-355W1				Page / column
								LiCYC 2x0,34	Cable type								Cable type	SUPER-PAAR-TRONIC 340-C-PUR 1x2x0,34 mm²				
ECW+X compressed air outlet pressure												9B			-220A31	4:37		BN				/355.1
=								BN		+TMA_E-355X1	3	9C			-220A31	4:27		WH				/355.2

IK4-TEKNIKER
AVDA. OTAOLA 20
20600 Eibar (Gipuzkoa) Spain
Tfno.:(+34) 943 206744
Fax: (+34) 943 202757
Web: www.tekniker.es

Date	23/02/2017							
Reviewed	F.LÓPEZ	2.3	15/12/2017	JOSE MANUEL				
Drew by	jcastano	Review	Date	Name	Review	Date	Name	

3151_LSST

MCS Design Electrical Schematics

LSST TELESCOPE

Replaces | Replaced by

Terminal diagram
=E1+TMA-EL-CS-CBT-0101-X12

Customer: EMPRESARIOS AGRUPADOS
C/Magallanes, 3
28015 MADRID
91 3098000
http://www.empresariosagrupados.es/

= REPORT

+ TMA-EL-CS-CBT-0101

Cable diagram

F09_001_TK1

Cable ID	Cable Type	no. of conductors	cross-section	cable length	function text
=E1+TMA-EL-CS-CBT-0101-320W1	JZ-602-CY 3G1	3	1		CAMERA CABLE WRAP POSITIVE Limit Switch

function text	X-Ref	Connected to	Pin	conductor	Connected to	Pin	X-Ref
24VDC I/Os EL1	/320.1	+TMA-EL-CS-CBT-0105-X2	10	**1**	-320S1	31	/320.1
=	/320.1	+TMA-EL-CS-CBT-0105-X2	19	**2**	-320S1	32	/320.1
	/320.2	+TMA-EL-CS-CBT-0105-PE	1	**GNYE**	-320S1	PE	/320.2
CAMERA CABLE WRAP POSITIVE Limit Switch	/320.1	-320W1		**SH**	+TMA-EL-CS-CBT-0105-320W1-SH		/320.2

IK4 TEKNIKER Research Alliance

IK4-TEKNIKER
AVDA. OTAOLA 20
20600 Eibar (Gipuzkoa) Spain
Tfno.:(+34) 943 206744
Fax: (+34) 943 202757
Web: www.tekniker.es

Date	23/02/2017						
Reviewed	F.LÓPEZ	2.3	15/12/2017	JOSE MANUEL			
Drew by	jcastano	Review	Date	Name	Review	Date	Name

3151_LSST

MCS Design Electrical Schematics

LSST TELESCOPE

Replaces

Replaced by

Cable diagram
=E1+TMA-EL-CS-CBT-0101-320W1

Customer:

EMPRESARIOS AGRUPADOS

C/Magallanes, 3
28015 MADRID
91 3098000

http://www.empresariosagrupados.es/

= REPORT

+ TMA-EL-CS-CBT-0101

Cable diagram

F09_001_TK1

Cable ID	Cable Type	no. of conductors	cross-section	cable length	function text
=E1+TMA-EL-CS-CBT-0101-320W2	JZ-602-CY 3G1	3	1		CAMERA CABLE WRAP NEGATIVE Limit Switch

function text	X-Ref	Connected to	Pin	conductor	Connected to	Pin	X-Ref
24VDC I/Os EL1	/320.3	+TMA-EL-CS-CBT-0105-X2	11	**1**	-320S2	31	/320.3
=	/320.4	+TMA-EL-CS-CBT-0105-X2	20	**2**	-320S2	32	/320.3
	/320.4	+TMA-EL-CS-CBT-0105-PE	2	**GNYE**	-320S2	PE	/320.4
CAMERA CABLE WRAP NEGATIVE Limit Switch	/320.3	-320W2		**SH**	+TMA-EL-CS-CBT-0105-320W2-SH		/320.4

IK4 TEKNIKER Research Alliance

IK4-TEKNIKER
AVDA. OTAOLA 20
20600 Eibar (Gipuzkoa) Spain
Tfno.:(+34) 943 206744
Fax: (+34) 943 202757
Web: www.tekniker.es

Date	23/02/2017						
Reviewed	F.LÓPEZ	2.3	15/12/2017	JOSE MANUEL			
Drew by	jcastano	Review	Date	Name	Review	Date	Name

3151_LSST — MCS Design Electrical Schematics

LSST TELESCOPE

Replaces — Replaced by

Cable diagram
=E1+TMA-EL-CS-CBT-0101-320W2

Customer: EMPRESARIOS AGRUPADOS
C/Magallanes, 3
28015 MADRID
91 3098000
http://www.empresariosagrupados.es/

= REPORT
+ TMA-EL-CS-CBT-0101

Cable diagram

F09_001_TK1

Cable ID	Cable Type	no. of conductors	cross-section	cable length	function text
=E1+TMA-EL-CS-CBT-0101-320W3	JZ-602-CY 3G1	3	1		CAMERA CABLE WRAP POSITIVE Limit Switch

function text	X-Ref	Connected to	Pin	conductor	Connected to	Pin	X-Ref
24VDC I/Os EL1	/320.5	+TMA-EL-CS-CBT-0105-X2	12	**1**	-320S3	31	/320.5
=	/320.6	+TMA-EL-CS-CBT-0105-X2	21	**2**	-320S3	32	/320.5
	/320.6	+TMA-EL-CS-CBT-0105-PE	3	**GNYE**	-320S3	PE	/320.6
CAMERA CABLE WRAP POSITIVE Limit Switch	/320.5	-320W3		**SH**	+TMA-EL-CS-CBT-0105-320W3-SH		/320.6

IK4 TEKNIKER Research Alliance

IK4-TEKNIKER
AVDA. OTAOLA 20
20600 Eibar (Gipuzkoa) Spain
Tfno.:(+34) 943 206744
Fax: (+34) 943 202757
Web: www.tekniker.es

Date	23/02/2017						
Reviewed	F.LÓPEZ	2.3	15/12/2017	JOSE MANUEL			
Drew by	jcastano	Review	Date	Name	Review	Date	Name

3151_LSST — MCS Design Electrical Schematics

LSST TELESCOPE

Replaces — Replaced by

Cable diagram
=E1+TMA-EL-CS-CBT-0101-320W3

Customer: EMPRESARIOS AGRUPADOS
C/Magallanes, 3
28015 MADRID
91 3098000
http://www.empresariosagrupados.es/

= REPORT
+ TMA-EL-CS-CBT-0101

Cable diagram

F09_001_TK1

Cable ID	Cable Type	no. of conductors	cross-section	cable length	function text
=E1+TMA-EL-CS-CBT-0101-320W4	JZ-602-CY 3G1	3	1		CAMERA CABLE WRAP NEGATIVE Limit Switch

function text	X-Ref	Connected to	Pin	conductor	Connected to	Pin	X-Ref
24VDC I/Os EL1	/320.7	+TMA-EL-CS-CBT-0105-X2	13	**1**	-320S4	31	/320.7
=	/320.8	+TMA-EL-CS-CBT-0105-X2	22	**2**	-320S4	32	/320.8
	/320.8	+TMA-EL-CS-CBT-0105-PE	4	**GNYE**	-320S4	PE	/320.8
CAMERA CABLE WRAP NEGATIVE Limit Switch	/320.7	-320W4		**SH**	+TMA-EL-CS-CBT-0105-320W4-SH		/320.8

IK4 TEKNIKER Research Alliance

IK4-TEKNIKER
AVDA. OTAOLA 20
20600 Eibar (Gipuzkoa) Spain
Tfno.:(+34) 943 206744
Fax: (+34) 943 202757
Web: www.tekniker.es

Date	23/02/2017						
Reviewed	F.LÓPEZ	2.3	15/12/2017	JOSE MANUEL			
Drew by	jcastano	Review	Date	Name	Review	Date	Name

3151_LSST — MCS Design Electrical Schematics

LSST TELESCOPE

Replaces — Replaced by

Cable diagram
=E1+TMA-EL-CS-CBT-0101-320W4

Customer: EMPRESARIOS AGRUPADOS
C/Magallanes, 3
28015 MADRID
91 3098000
http://www.empresariosagrupados.es/

= REPORT
+ TMA-EL-CS-CBT-0101

Cable diagram

F09_001_TK1

Cable ID	Cable Type	no. of conductors	cross-section	cable length	function text
=E1+TMA-EL-CS-CBT-0101-320W5A	JZ-602-CY / OZ-602-CY	18	1,5		CCW SIGNALS INTERFACE

function text	X-Ref	Connected to	Pin	conductor	Connected to	Pin	X-Ref
24VDC I/Os EL1	/320.1	-320X1M	1	**1**	+TMA-EL-CS-CBT-0105-X2	10	/320.1
=	/320.1	-320X1M	2	**2**	+TMA-EL-CS-CBT-0105-X2	16	/320.1
=	/320.1	-320X1M	3	**3**	+TMA-EL-CS-CBT-0105-X2	19	/320.1
=	/320.4	-320X1M	4	**4**	+TMA-EL-CS-CBT-0105-X2	20	/320.4
=	/320.6	-320X1M	5	**5**	+TMA-EL-CS-CBT-0105-X2	21	/320.6
=	/320.8	-320X1M	6	**6**	+TMA-EL-CS-CBT-0105-X2	22	/320.8
CAMERA CABLE WRAP LUBRICACION PINION 1	/325.0	-320X1M	7	**7**	+TMA-EL-CS-CBT-0105-X2	1	/325.0
=	/325.1	-320X1M	8	**8**	+TMA-EL-CS-CBT-0105-X2	3	/325.1
=	/325.1	-320X1M	9	**9**	+TMA-EL-CS-CBT-0105-X2	5	/325.1
=	/325.1	-320X1M	10	**10**	+TMA-EL-CS-CBT-0105-X2	6	/325.1
=	/325.2	-320X1M	11	**11**	+TMA-EL-CS-CBT-0105-X2	23	/325.2
CAMERA CABLE WRAP LUBRICACION PINION 2	/325.5	-320X1M	12	**12**	+TMA-EL-CS-CBT-0105-X2	7	/325.5
=	/325.5	-320X1M	13	**13**	+TMA-EL-CS-CBT-0105-X2	8	/325.5
=	/325.6	-320X1M	14	**14**	+TMA-EL-CS-CBT-0105-X2	24	/325.6
=	/325.7	-320X1M	15	**15**	+TMA-EL-CS-CBT-0105-X2	9	/325.7
				16			
				17			
24VDC I/Os EL1	/320.9	-320X1M	16	**GNYE**	+TMA-EL-CS-CBT-0105-PE	1	/320.9
=	/320.9	-320X1M	SH	**SH**	-320W5A		/320.1

◁ 3004

3006 ▷

IK4 TEKNIKER Research Alliance
IK4-TEKNIKER
AVDA. OTAOLA 20
20600 Eibar (Gipuzkoa) Spain
Tfno.:(+34) 943 206744
Fax: (+34) 943 202757
Web: www.tekniker.es

Date	23/02/2017						
Reviewed	F.LÓPEZ	2.3	15/12/2017	JOSE MANUEL			
Drew by	jcastano	Review	Date	Name	Review	Date	Name

3151_LSST
MCS Design Electrical Schematics
LSST TELESCOPE

Replaces | Replaced by

Cable diagram
=E1+TMA-EL-CS-CBT-0101-320W5A

Customer: EMPRESARIOS AGRUPADOS
C/Magallanes, 3
28015 MADRID
91 3098000
http://www.empresariosagrupados.es/

= REPORT
+ TMA-EL-CS-CBT-0101

Cable diagram

F09_001_TK1

Cable ID	Cable Type	no. of conductors	cross-section	cable length	function text
=E1+TMA-EL-CS-CBT-0101-325W1	4x 0.25mm2	4	0,25		LUBRICATION BKI 101 e CABLE

function text	X-Ref	Connected to	Pin	conductor	Connected to	Pin	X-Ref
CAMERA CABLE WRAP LUBRICACION PINION 1	/325.1	+TMA-EL-CS-CBT-0105-X2	3	**BK**	-325U1	BK	/325.1
=	/325.0	+TMA-EL-CS-CBT-0105-X2	1	**BN**	-325U1	BN	/325.0
=	/325.1	+TMA-EL-CS-CBT-0105-X2	6	**BU**	-325U1	BU	/325.1
=	/325.1	+TMA-EL-CS-CBT-0105-X2	5	**WH**	-325U1	WH	/325.1

IK4 TEKNIKER Research Alliance

IK4-TEKNIKER
AVDA. OTAOLA 20
20600 Eibar (Gipuzkoa) Spain
Tfno.:(+34) 943 206744
Fax: (+34) 943 202757
Web: www.tekniker.es

Date	23/02/2017						
Reviewed	F.LÓPEZ	2.3	15/12/2017	JOSE MANUEL			
Drew by	jcastano	Review	Date	Name	Review	Date	Name

3151_LSST — MCS Design Electrical Schematics

LSST TELESCOPE

Replaces — Replaced by

Cable diagram
=E1+TMA-EL-CS-CBT-0101-325W1

Customer: EMPRESARIOS AGRUPADOS
C/Magallanes, 3
28015 MADRID
91 3098000
http://www.empresariosagrupados.es/

= REPORT
+ TMA-EL-CS-CBT-0101

Cable diagram

F09_001_TK1

Cable ID	Cable Type	no. of conductors	cross-section	cable length	function text
=E1+TMA-EL-CS-CBT-0101-325W2	3x0,14mm2	3	0,14		emptying monitor cable

function text	X-Ref	Connected to	Pin	conductor	Connected to	Pin	X-Ref
CAMERA CABLE WRAP LUBRICACION PINION 1	/325.2	+TMA-EL-CS-CBT-0105-X2	23	**BK**	-325U1	BK	/325.2
=	/325.2	+TMA-EL-CS-CBT-0105-X2	14	**BN**	-325U1	BN	/325.2
=	/325.2	+TMA-EL-CS-CBT-0105-X2	17	**BU**	-325U1	BU	/325.2

Cable diagram

F09_001_TK1

Cable ID	Cable Type	no. of conductors	cross-section	cable length	function text
=E1+TMA-EL-CS-CBT-0101-325W4	4x 0.25mm2	4	0,25		LUBRICATION BKI 101 e CABLE

function text	X-Ref	Connected to	Pin	conductor	Connected to	Pin	X-Ref
CAMERA CABLE WRAP LUBRICACION PINION 2	/325.5	+TMA-EL-CS-CBT-0105-X2	4	**BK**	-325U2	BK	/325.5
=	/325.4	+TMA-EL-CS-CBT-0105-X2	2	**BN**	-325U2	BN	/325.4
=	/325.5	+TMA-EL-CS-CBT-0105-X2	8	**BU**	-325U2	BU	/325.5
=	/325.5	+TMA-EL-CS-CBT-0105-X2	7	**WH**	-325U2	WH	/325.5

IK4 TEKNIKER Research Alliance

IK4-TEKNIKER
AVDA. OTAOLA 20
20600 Eibar (Gipuzkoa) Spain
Tfno.:(+34) 943 206744
Fax: (+34) 943 202757
Web: www.tekniker.es

Date	23/02/2017						
Reviewed	F.LÓPEZ	2.3	15/12/2017	JOSE MANUEL			
Drew by	jcastano	Review	Date	Name	Review	Date	Name

3151_LSST — MCS Design Electrical Schematics

LSST TELESCOPE

Replaces — Replaced by

Cable diagram
=E1+TMA-EL-CS-CBT-0101-325W4

Customer: EMPRESARIOS AGRUPADOS
C/Magallanes, 3
28015 MADRID
91 3098000
http://www.empresariosagrupados.es/

= REPORT
+ TMA-EL-CS-CBT-0101

Cable diagram

F09_001_TK1

Cable ID	Cable Type	no. of conductors	cross-section	cable length	function text
=E1+TMA-EL-CS-CBT-0101-325W6	3x0,14mm2	3	0,14		emptying monitor cable

function text	X-Ref	Connected to	Pin	conductor	Connected to	Pin	X-Ref
CAMERA CABLE WRAP LUBRICACION PINION 2	/325.6	+TMA-EL-CS-CBT-0105-X2	24	**BK**	-325U2	BK	/325.6
=	/325.6	+TMA-EL-CS-CBT-0105-X2	15	**BN**	-325U2	BN	/325.6
=	/325.6	+TMA-EL-CS-CBT-0105-X2	18	**BU**	-325U2	BU	/325.6

Cable diagram

F09_001_TK1

Cable ID	Cable Type	no. of conductors	cross-section	cable length	function text
=E1+TMA-EL-CS-CBT-0101-340W1	SUPER-PAAR-TRONIC 340-C-PUR 1x2x0,34 mm²	2	0,34		EL CW COOLING CIRCUIT OUT PRESSURE

function text	X-Ref	Connected to	Pin	conductor	Connected to	Pin	X-Ref
EL CW COOLING CIRCUIT OUT PRESSURE	/340.1	-X12	1C	**WH**	-220A30	1:20	/233.2
=	/340.1	-X12	1B	**BN**	-220A30	1:30	/233.2
=	/340.2	-340W1		**SH**	-340W1-SH		/233.2

IK4 TEKNIKER Research Alliance

IK4-TEKNIKER
AVDA. OTAOLA 20
20600 Eibar (Gipuzkoa) Spain
Tfno.:(+34) 943 206744
Fax: (+34) 943 202757
Web: www.tekniker.es

Date	23/02/2017						
Reviewed	F.LÓPEZ	2.3	15/12/2017	JOSE MANUEL			
Drew by	jcastano	Review	Date	Name	Review	Date	Name

3151_LSST

MCS Design Electrical Schematics

LSST TELESCOPE

Replaces

Replaced by

Cable diagram
=E1+TMA-EL-CS-CBT-0101-340W1

Customer:

EMPRESARIOS AGRUPADOS

EMPRESARIOS AGRUPADOS
C/Magallanes, 3
28015 MADRID
91 3098000

http://www.empresariosagrupados.es/

= REPORT

+ TMA-EL-CS-CBT-0101

Cable diagram

F09_001_TK1

Cable ID	Cable Type	no. of conductors	cross-section	cable length	function text
=E1+TMA-EL-CS-CBT-0101-340W2	SUPER-PAAR-TRONIC 340-C-PUR 1x2x0,34 mm²	2	0,34		EL CW COOLING CIRCUIT IN PRESSURE

function text	X-Ref	Connected to	Pin	conductor	Connected to	Pin	X-Ref
EL CW COOLING CIRCUIT IN PRESSURE	/340.3	-X12	2C	**WH**	-220A30	1:21	/233.2
=	/340.3	-X12	2B	**BN**	-220A30	1:31	/233.3
=	/340.4	-340W2		**SH**	-340W2-SH		/233.3

IK4 TEKNIKER Research Alliance

IK4-TEKNIKER
AVDA. OTAOLA 20
20600 Eibar (Gipuzkoa) Spain
Tfno.:(+34) 943 206744
Fax: (+34) 943 202757
Web: www.tekniker.es

Date	23/02/2017						
Reviewed	F.LÓPEZ	2.3	15/12/2017	JOSE MANUEL			
Drew by	jcastano	Review	Date	Name	Review	Date	Name

3151_LSST

MCS Design Electrical Schematics

LSST TELESCOPE

Replaces

Replaced by

Cable diagram
=E1+TMA-EL-CS-CBT-0101-340W2

Customer:
EMPRESARIOS AGRUPADOS
C/Magallanes, 3
28015 MADRID
91 3098000
http://www.empresariosagrupados.es/

= REPORT
+ TMA-EL-CS-CBT-0101

Cable diagram

F09_001_TK1

Cable ID	Cable Type	no. of conductors	cross-section	cable length	function text
=E1+TMA-EL-CS-CBT-0101-340W3	SUPER-PAAR-TRONIC 340-C-PUR 1x2x0,34 mm²	2	0,34		EL CCW COOLING CIRCUIT IN PRESSURE

function text	X-Ref	Connected to	Pin	conductor	Connected to	Pin	X-Ref
EL CCW COOLING CIRCUIT IN PRESSURE	/340.6	-X12	3C	**WH**	-220A30	2:22	/233.3
=	/340.6	-X12	3B	**BN**	-220A30	2:32	/233.4
=	/340.6	-340W3		**SH**	-340W3-SH		/233.4

◁ 3011

3013 ▷

IK4 TEKNIKER Research Alliance
IK4-TEKNIKER
AVDA. OTAOLA 20
20600 Eibar (Gipuzkoa) Spain
Tfno.:(+34) 943 206744
Fax: (+34) 943 202757
Web: www.tekniker.es

Date	23/02/2017						
Reviewed	F.LÓPEZ	2.3	15/12/2017	JOSE MANUEL			
Drew by	jcastano	Review	Date	Name	Review	Date	Name

3151_LSST

MCS Design Electrical Schematics

LSST TELESCOPE

Replaces

Replaced by

Cable diagram
=E1+TMA-EL-CS-CBT-0101-340W3

Customer:

EMPRESARIOS AGRUPADOS

EMPRESARIOS AGRUPADOS
C/Magallanes, 3
28015 MADRID
91 3098000
http://www.empresariosagrupados.es/

= REPORT

+ TMA-EL-CS-CBT-0101

Cable diagram

F09_001_TK1

Cable ID	Cable Type	no. of conductors	cross-section	cable length	function text
=E1+TMA-EL-CS-CBT-0101-340W4	SUPER-PAAR-TRONIC 340-C-PUR 1x2x0,34 mm²	2	0,34		EL CCW COOLING CIRCUIT OUT PRESSURE

function text	X-Ref	Connected to	Pin	conductor	Connected to	Pin	X-Ref
EL CCW COOLING CIRCUIT OUT PRESSURE	/340.8	-X12	4C	**WH**	-220A30	2:23	/233.4
=	/340.8	-X12	4B	**BN**	-220A30	2:33	/233.5
=	/340.8	-340W4		**SH**	-340W4-SH		/233.5

IK4 TEKNIKER Research Alliance

IK4-TEKNIKER
AVDA. OTAOLA 20
20600 Eibar (Gipuzkoa) Spain
Tfno.:(+34) 943 206744
Fax: (+34) 943 202757
Web: www.tekniker.es

Date	23/02/2017						
Reviewed	F.LÓPEZ	2.3	15/12/2017	JOSE MANUEL			
Drew by	jcastano	Review	Date	Name	Review	Date	Name

3151_LSST

MCS Design Electrical Schematics

LSST TELESCOPE

Replaces

Replaced by

Cable diagram
=E1+TMA-EL-CS-CBT-0101-340W4

Customer:

EMPRESARIOS AGRUPADOS

EMPRESARIOS AGRUPADOS
C/Magallanes, 3
28015 MADRID
91 3098000

http://www.empresariosagrupados.es/

= REPORT

+ TMA-EL-CS-CBT-0101

Cable diagram

F09_001_TK1

Cable ID	Cable Type	no. of conductors	cross-section	cable length	function text
=E1+TMA-EL-CS-CBT-0101-341W1	SUPER-PAAR-TRONIC 340-C-PUR 1x2x0,34 mm²	2	0,34		CHILLER COOLING CIRCUIT OUT PRESSURE

function text	X-Ref	Connected to	Pin	conductor	Connected to	Pin	X-Ref
CHILLER COOLING CIRCUIT OUT PRESSURE	/341.1	-X12	5C	**WH**	-220A30	3:24	/233.5
=	/341.1	-X12	5B	**BN**	-220A30	3:34	/233.5
=	/341.2	-341W1		**SH**	-341W1-SH		/233.6

IK4 TEKNIKER Research Alliance

IK4-TEKNIKER
AVDA. OTAOLA 20
20600 Eibar (Gipuzkoa) Spain
Tfno.:(+34) 943 206744
Fax: (+34) 943 202757
Web: www.tekniker.es

Date	23/02/2017						
Reviewed	F.LÓPEZ	2.3	15/12/2017	JOSE MANUEL			
Drew by	jcastano	Review	Date	Name	Review	Date	Name

3151_LSST

MCS Design Electrical Schematics

LSST TELESCOPE

Replaces

Replaced by

Cable diagram
=E1+TMA-EL-CS-CBT-0101-341W1

Customer:

EMPRESARIOS AGRUPADOS

EMPRESARIOS AGRUPADOS
C/Magallanes, 3
28015 MADRID
91 3098000

http://www.empresariosagrupados.es/

= REPORT

+ TMA-EL-CS-CBT-0101

Cable diagram

F09_001_TK1

Cable ID	Cable Type	no. of conductors	cross-section	cable length	function text
=E1+TMA-EL-CS-CBT-0101-341W2	SUPER-PAAR-TRONIC 340-C-PUR 1x2x0,34 mm²	2	0,34		CPM-005 COOLING CIRCUIT PRESSURE

function text	X-Ref	Connected to	Pin	conductor	Connected to	Pin	X-Ref
CPM-005 COOLING CIRCUIT PRESSURE	/341.3	-X12	6C	**WH**	-220A30	3:25	/233.6
=	/341.3	-X12	6B	**BN**	-220A30	3:35	/233.6
=	/341.4	-341W2		**SH**	-341W2-SH		/233.7

IK4 TEKNIKER Research Alliance

IK4-TEKNIKER
AVDA. OTAOLA 20
20600 Eibar (Gipuzkoa) Spain
Tfno.:(+34) 943 206744
Fax: (+34) 943 202757
Web: www.tekniker.es

Date	23/02/2017						
Reviewed	F.LÓPEZ	2.3	15/12/2017	JOSE MANUEL			
Drew by	jcastano	Review	Date	Name	Review	Date	Name

3151_LSST

MCS Design Electrical Schematics

LSST TELESCOPE

Replaces

Replaced by

Cable diagram
=E1+TMA-EL-CS-CBT-0101-341W2

Customer:

EMPRESARIOS AGRUPADOS

EMPRESARIOS AGRUPADOS
C/Magallanes, 3
28015 MADRID
91 3098000

http://www.empresariosagrupados.es/

= REPORT

+ TMA-EL-CS-CBT-0101

Cable diagram

F09_001_TK1

Cable ID	Cable Type	no. of conductors	cross-section	cable length	function text
=E1+TMA-EL-CS-CBT-0101-350W1	SUPER-PAAR-TRONIC 340-C-PUR 1x2x0,34 mm²	2	0,34		CCW COOLING CIRCUIT OUT TEMPERATURE

function text	X-Ref	Connected to	Pin	conductor	Connected to	Pin	X-Ref
TEMPERATURA OUT REFRIGERACION CCW	/350.1	-X12	7C	**WH**	-220A31	1:20	/234.2
=	/350.1	-X12	7B	**BN**	-220A31	1:30	/234.2
CCW COOLING CIRCUIT OUT TEMPERATURE	/350.2	-350W1		**SH**	-350W1-SH		/234.2

IK4 TEKNIKER Research Alliance

IK4-TEKNIKER
AVDA. OTAOLA 20
20600 Eibar (Gipuzkoa) Spain
Tfno.:(+34) 943 206744
Fax: (+34) 943 202757
Web: www.tekniker.es

Date	23/02/2017						
Reviewed	F.LÓPEZ	2.3	15/12/2017	JOSE MANUEL			
Drew by	jcastano	Review	Date	Name	Review	Date	Name

3151_LSST — MCS Design Electrical Schematics

LSST TELESCOPE

Replaces — Replaced by

Cable diagram
=E1+TMA-EL-CS-CBT-0101-350W1

Customer: EMPRESARIOS AGRUPADOS
C/Magallanes, 3
28015 MADRID
91 3098000
http://www.empresariosagrupados.es/

= REPORT
+ TMA-EL-CS-CBT-0101

Cable diagram

F09_001_TK1

Cable ID	Cable Type	no. of conductors	cross-section	cable length	function text
=E1+TMA-EL-CS-CBT-0101-350W2	SUPER-PAAR-TRONIC 340-C-PUR 1x2x0,34 mm²	2	0,34		CHILLER COOLING CIRCUIT OUT TEMPERATURE

function text	X-Ref	Connected to	Pin	conductor	Connected to	Pin	X-Ref
CHILLER COOLING CIRCUIT OUT TEMPERATURE	/350.5	-X12	8C	**WH**	-220A31	1:21	/234.2
=	/350.4	-X12	8B	**BN**	-220A31	1:31	/234.3
=	/350.5	-350W2		**SH**	-350W2-SH		/234.3

◁ 3016

3018 ▷

IK4 TEKNIKER Research Alliance
IK4-TEKNIKER
AVDA. OTAOLA 20
20600 Eibar (Gipuzkoa) Spain
Tfno.:(+34) 943 206744
Fax: (+34) 943 202757
Web: www.tekniker.es

Date	23/02/2017						
Reviewed	F.LÓPEZ	2.3	15/12/2017	JOSE MANUEL			
Drew by	jcastano	Review	Date	Name	Review	Date	Name

3151_LSST
MCS Design Electrical Schematics
LSST TELESCOPE

Replaces | Replaced by

Cable diagram
=E1+TMA-EL-CS-CBT-0101-350W2

Customer:
EMPRESARIOS AGRUPADOS
C/Magallanes, 3
28015 MADRID
91 3098000
http://www.empresariosagrupados.es/

= REPORT
+ TMA-EL-CS-CBT-0101

Cable diagram

F09_001_TK1

Cable ID	Cable Type	no. of conductors	cross-section	cable length	function text
=E1+TMA-EL-CS-CBT-0101-355W1	SUPER-PAAR-TRONIC 340-C-PUR 1x2x0,34 mm²	2	0,34		ECW+X compressed air outlet pressure

function text	X-Ref	Connected to	Pin	conductor	Connected to	Pin	X-Ref
ECW+X compressed air outlet pressure	/355.2	-X12	9C	**WH**	-220A31	4:27	/234.8
=	/355.1	-X12	9B	**BN**	-220A31	4:37	/234.8
=	/355.2	-355W1		**SH**	-355W1-SH		/234.8

◁ 3017

+TMA-EL-CS-CBT-0102/001 ▷

IK4-TEKNIKER
AVDA. OTAOLA 20
20600 Eibar (Gipuzkoa) Spain
Tfno.:(+34) 943 206744
Fax: (+34) 943 202757
Web: www.tekniker.es

Date	23/02/2017						
Reviewed	F.LÓPEZ	2.3	15/12/2017	JOSE MANUEL			
Drew by	jcastano	Review	Date	Name	Review	Date	Name

3151_LSST

MCS Design Electrical Schematics

LSST TELESCOPE

Replaces

Replaced by

Cable diagram
=E1+TMA-EL-CS-CBT-0101-355W1

Customer:

EMPRESARIOS AGRUPADOS
C/Magallanes, 3
28015 MADRID
91 3098000

http://www.empresariosagrupados.es/

= REPORT

+ TMA-EL-CS-CBT-0101

Customer

EMPRESARIOS AGRUPADOS

EMPRESARIOS AGRUPADOS
C/Magallanes, 3
28015 MADRID
ESPAÑA
91 3098000

http://www.empresariosagrupados.es/

Project:

3151_LSST
MCS Design Electrical Schematics
LSST TELESCOPE

REPORT
GENERAL REPORT

TMA-EL-CS-CBT-0102
AUXILIARY ELEVATION 2 BOX (-X)

Number of pages: 710

Made by:

IK4 TEKNIKER
Research Alliance

IK4-TEKNIKER
AVDA. OTAOLA 20
20600 Eibar (Gipuzkoa) Spain
Tfno. : (+34) 943 206744
Fax : (+34) 943 202757
Web: www.tekniker.es

Review	Review description	Date	Reviewed
2.3	VERSION INTERMEDIA PARA MONTAJE ASTURFEITO (SIN EVALUACIONES)	15/12/2017	JOSE MANUEL

Drew by: J.M.CASTAÑO

Reviewed: F.LÓPEZ

Date: 16/12/2015

Replaces:

Replaced by:

Parts list

TEKNIKER_v2

DEVICE TAG	PLACEMENT	DESCRIPTION	REFERENCE	MANUFACTURER
=E1-220A1	=E1/220.0	Bus coupler	AXL F BK EC 2688899	PHOENIX CONTACT
=E1-220A10	=E1/220.1	I/O module	2688022	PHOENIX CONTACT
=E1-220A20	=E1/220.3	I/O module	2700608	PHOENIX CONTACT
=E1-220A30	=E1/220.4	I/O module	2688064	PHOENIX CONTACT
=E1-220A40	=E1 (EC4.S13)	I/O module	2688556	PHOENIX CONTACT
=E1-500A1	=E1/500.2	PSSu head module	PSSu H FS SN SDT 314 085	PILZ
=E1-500A1	=E1/500.2	TERMINALS	PSSu A Con 2/8 C 313 111	PILZ
=E1-500A10	=E1/500.4	Safety digital input module	PSSu E F 4DI-T 314 200	PILZ
=E1-500A10	=E1/500.4	Base module Cage clamp terminal	PSSu BP 1/8 C-T 314 601	PILZ
=E1-500A11	=E1/500.4	Safety digital input module	PSSu E F 4DI-T 314 200	PILZ
=E1-500A11	=E1/500.4	Base module Cage clamp terminal	PSSu BP 1/8 C-T 314 601	PILZ
=E1-500A12	=E1/500.4	Safety digital input module	PSSu E F 4DI-T 314 200	PILZ
=E1-500A12	=E1/500.4	Base module Cage clamp terminal	PSSu BP 1/8 C-T 314 601	PILZ
=E1-500A13	=E1/500.4	Safety digital input module	PSSu E F 4DI-T 314 200	PILZ
=E1-500A13	=E1/500.4	Base module Cage clamp terminal	PSSu BP 1/8 C-T 314 601	PILZ
=E1-500A14	=E1/500.4	Safety digital input module	PSSu E F 4DI-T 314 200	PILZ
=E1-500A14	=E1/500.4	Base module Cage clamp terminal	PSSu BP 1/8 C-T 314 601	PILZ
=E1-500A15	=E1/500.5	Safety digital input module	PSSu E F 4DI-T 314 200	PILZ
=E1-500A15	=E1/500.5	Base module Cage clamp terminal	PSSu BP 1/8 C-T 314 601	PILZ
=E1-020F1	=E1/020.2	Miniature Circuit Breaker C 10A	A9F79310	SCHNEIDER ELECTRIC
=E1-026F1	=E1/026.2	Base element	2800929	PHOENIX CONTACT
=E1-026F1	=E1/026.2	Plug-in bridge	3030255	PHOENIX CONTACT
=E1-026F1	=E1/026.2	Plug-in bridge	3036958	PHOENIX CONTACT
=E1-026F1-F1	=E1/026.2	Thermomagnetic device circuit breaker	2800850	PHOENIX CONTACT
=E1-026F1-F1	=E1 (EC4.S13)	Electronic device circuit breaker	2800904	PHOENIX CONTACT
=E1-026F2	=E1/026.3	Base element	2800929	PHOENIX CONTACT
=E1-026F2-F2	=E1/026.3	Thermomagnetic device circuit breaker	2800854	PHOENIX CONTACT
=E1-026F2-F2	=E1 (EC4.S13)	Electronic device circuit breaker	2800907	PHOENIX CONTACT
=E1-020G1	=E1/020.1	Power supply unit	2866792	PHOENIX CONTACT
=E1-230K1	=E1/230.2	RIF-0 Base módule	2900958	PHOENIX CONTACT
=E1-230K1	=E1/230.2	Single relay	2961105	PHOENIX CONTACT
=E1-230K2	=E1/230.3	RIF-0 Base módule	2900958	PHOENIX CONTACT
=E1-230K2	=E1/230.3	Single relay	2961105	PHOENIX CONTACT
=E1-PE	=E1/701.2	earth busbar	550220 TCB 20x5	ERICO
=E1-PE	=E1 (EC4.S13)	earth busbar	550220 TCB 20x5	ERICO
=E1-222S1	=E1/222.6	Cabinet Door switch	SZ 4127.010	RITTAL
=E1-701SH1 1	=E1/701.4	Connection terminal block	0404017	PHOENIX CONTACT
=E1-701SH1 1	=E1/701.4	Support bracket	0404428	PHOENIX CONTACT
=E1-701SH1 1	=E1/701.4	Support bracket	0404428	PHOENIX CONTACT

Parts list

TEKNIKER_v2

DEVICE TAG		PLACEMENT	DESCRIPTION	REFERENCE	MANUFACTURER
=E1-701SH1	1	=E1/701.4	Neutral busbar	0402174	PHOENIX CONTACT
=E1-701SH1	1	=E1 (EC4.S13)	Support bracket	0404428	PHOENIX CONTACT
=E1-701SH1	1	=E1 (EC4.S13)	Support bracket	0404428	PHOENIX CONTACT
=E1-701SH1	1	=E1 (EC4.S13)	Neutral busbar	0402174	PHOENIX CONTACT
=E1-701SH2	1	=E1/701.4	Connection terminal block	0404017	PHOENIX CONTACT
=E1-701SH2	1	=E1/701.4	Support bracket	0404428	PHOENIX CONTACT
=E1-701SH2	1	=E1/701.4	Support bracket	0404428	PHOENIX CONTACT
=E1-701SH2	1	=E1/701.4	Neutral busbar	0402174	PHOENIX CONTACT
=E1-701SH2	1	=E1 (EC4.S13)	Support bracket	0404428	PHOENIX CONTACT
=E1-701SH2	1	=E1 (EC4.S13)	Support bracket	0404428	PHOENIX CONTACT
=E1-701SH2	1	=E1 (EC4.S13)	Neutral busbar	0402174	PHOENIX CONTACT
=E1-U1		=E1 (EC4.S13)	Mounting rail EN 50 022 (35x15)	TS 35_15	...
=E1-U2		=E1 (EC4.S13)	Mounting rail EN 50 022 (35x15)	TS 35_15	...
=E1-U3		=E1 (EC4.S13)	Mounting rail EN 50 022 (35x15)	TS 35_15	...
=E1-U50		=E1 (EC4.S13)	NSYS3D6G8630P	NSYS3D6G8630P	SCHNEIDER ELECTRIC
=E1-U100		=E1 (EC4.S13)	Unex slotted trunking 80x30 in U23X	80.30.77	UNEX
=E1-U101		=E1 (EC4.S13)	Unex slotted trunking 80x43 in U23X	80.40.77	UNEX
=E1-U102		=E1 (EC4.S13)	Unex slotted trunking 80x43 in U23X	80.40.77	UNEX
=E1-U103		=E1 (EC4.S13)	Unex slotted trunking 80x43 in U23X	80.40.77	UNEX
=E1-U104		=E1 (EC4.S13)	Unex slotted trunking 80x43 in U23X	80.40.77	UNEX
=E1-U105		=E1 (EC4.S13)	Unex slotted trunking 80x43 in U23X	80.40.77	UNEX
=E1-320W1		=E1/320.2	UL/CSA Cable for Drag Chains SUPER-PAAR-TRONIC 340-C-PUR 1x2x0,34 mm² (22 AWG) GY	49839	HELUKABEL
=E1-320W2		=E1/320.4	UL/CSA Cable for Drag Chains SUPER-PAAR-TRONIC 340-C-PUR 1x2x0,34 mm² (22 AWG) GY	49839	HELUKABEL
=E1-320W3		=E1/320.6	UL/CSA Cable for Drag Chains SUPER-PAAR-TRONIC 340-C-PUR 1x2x0,34 mm² (22 AWG) GY	49839	HELUKABEL
=E1-320W4		=E1/320.8	UL/CSA Cable for Drag Chains SUPER-PAAR-TRONIC 340-C-PUR 1x2x0,34 mm² (22 AWG) GY	49839	HELUKABEL
=E1-350W1		=E1/350.2	UL/CSA Cable for Drag Chains SUPER-PAAR-TRONIC 340-C-PUR 1x2x0,34 mm² (22 AWG) GY	49839	HELUKABEL
=E1-355W1		=E1/355.2	UL/CSA Cable for Drag Chains SUPER-PAAR-TRONIC 340-C-PUR 1x2x0,34 mm² (22 AWG) GY	49839	HELUKABEL
=E1-X1	1	=E1/020.2	Feed-through terminal block "Push-in" PT 2,5	3209510	PHOENIX CONTACT
=E1-X1	2	=E1/020.2	Feed-through terminal block "Push-in" PT 2,5	3209510	PHOENIX CONTACT
=E1-X1	3	=E1/026.5	Feed-through terminal block "Push-in" PT 2,5	3209510	PHOENIX CONTACT
=E1-X1	4	=E1/020.2	Feed-through terminal block "Push-in" PT 2,5	3209510	PHOENIX CONTACT
=E1-X1	5	=E1/020.2	Feed-through terminal block "Push-in" PT 2,5	3209510	PHOENIX CONTACT
=E1-X1	6	=E1/026.5	Feed-through terminal block "Push-in" PT 2,5	3209510	PHOENIX CONTACT
=E1-X1	7	=E1/026.2	Feed-through terminal block "Push-in" PT 2,5	3209510	PHOENIX CONTACT
=E1-X1	7	=E1/026.2	2,5/4-1,5/S reduction busbar	3214356	PHOENIX CONTACT
=E1-X1	8	=E1/221.2	Feed-through terminal block PT 1,5/S	3208100	PHOENIX CONTACT
=E1-X1	8	=E1/221.2	4 PT 1,5 busbar	FBS 4-3,5 3213030	PHOENIX CONTACT
=E1-X1	9	=E1/320.0	Feed-through terminal block PT 1,5/S	3208100	PHOENIX CONTACT
=E1-X1	10	=E1/502.4	Feed-through terminal block PT 1,5/S	3208100	PHOENIX CONTACT

Parts list

TEKNIKER_v2

DEVICE TAG		PLACEMENT	DESCRIPTION	REFERENCE	MANUFACTURER
=E1-X1	11	=E1/502.4	Feed-through terminal block PT 1,5/S	3208100	PHOENIX CONTACT
=E1-X1	12	=E1/026.2	Feed-through terminal block "Push-in" PT 2,5	3209510	PHOENIX CONTACT
=E1-X1	12	=E1/026.2	2,5/4-1,5/S reduction busbar	3214356	PHOENIX CONTACT
=E1-X1	13	=E1/221.3	Feed-through terminal block PT 1,5/S	3208100	PHOENIX CONTACT
=E1-X1	13	=E1/221.3	4 PT 1,5 busbar	FBS 4-3,5 3213030	PHOENIX CONTACT
=E1-X1	14	=E1/255.6	Feed-through terminal block PT 1,5/S	3208100	PHOENIX CONTACT
=E1-X1	15	=E1/502.4	Feed-through terminal block PT 1,5/S	3208100	PHOENIX CONTACT
=E1-X1	16	=E1/502.4	Feed-through terminal block PT 1,5/S	3208100	PHOENIX CONTACT
=E1-X1	17	=E1/026.3	Feed-through terminal block "Push-in" PT 2,5	3209510	PHOENIX CONTACT
=E1-X1	17	=E1/026.3	2,5/4-1,5/S reduction busbar	3214356	PHOENIX CONTACT
=E1-X1	18	=E1/222.1	Feed-through terminal block PT 1,5/S	3208100	PHOENIX CONTACT
=E1-X1	18	=E1/222.1	3 pt-1,5 busbar	3213027	PHOENIX CONTACT
=E1-X1	19	=E1/502.4	Feed-through terminal block PT 1,5/S	3208100	PHOENIX CONTACT
=E1-X1	20	=E1/502.7	Feed-through terminal block PT 1,5/S	3208100	PHOENIX CONTACT
=E1-X1	21	=E1/026.3	Feed-through terminal block "Push-in" PT 2,5	3209510	PHOENIX CONTACT
=E1-X1	21	=E1/026.3	2,5/4-1,5/S reduction busbar	3214356	PHOENIX CONTACT
=E1-X1	22	=E1/230.1	Feed-through terminal block PT 1,5/S	3208100	PHOENIX CONTACT
=E1-X1	23	=E1/502.4	Feed-through terminal block PT 1,5/S	3208100	PHOENIX CONTACT
=E1-X1	24	=E1/502.7	Feed-through terminal block PT 1,5/S	3208100	PHOENIX CONTACT
=E1-X10	1	=E1/701.2	Feed-through terminal block "Push-in" PT 2,5	3209510	PHOENIX CONTACT
=E1-X10	2	=E1/020.4	Feed-through terminal block "Push-in" PT 2,5	3209510	PHOENIX CONTACT
=E1-X10	3	=E1/701.2	Feed-through terminal block "Push-in" PT 2,5	3209510	PHOENIX CONTACT
=E1-X10	4	=E1/020.4	Feed-through terminal block "Push-in" PT 2,5	3209510	PHOENIX CONTACT
=E1-X10	5	=E1/701.2	Feed-through terminal block "Push-in" PT 2,5	3209510	PHOENIX CONTACT
=E1-X10	6	=E1/020.4	Feed-through terminal block "Push-in" PT 2,5	3209510	PHOENIX CONTACT
=E1-X10	7	=E1/255.1	Feed-through terminal block PT 1,5/S	3208100	PHOENIX CONTACT
=E1-X10	8	=E1/255.1	Feed-through terminal block PT 1,5/S	3208100	PHOENIX CONTACT
=E1-X10	9	=E1/255.2	Feed-through terminal block PT 1,5/S	3208100	PHOENIX CONTACT
=E1-X10	10	=E1/255.2	Feed-through terminal block PT 1,5/S	3208100	PHOENIX CONTACT
=E1-X10	11	=E1/255.2	Feed-through terminal block PT 1,5/S	3208100	PHOENIX CONTACT
=E1-X10	12	=E1/255.2	Feed-through terminal block PT 1,5/S	3208100	PHOENIX CONTACT
=E1-X10	13	=E1/255.2	Feed-through terminal block PT 1,5/S	3208100	PHOENIX CONTACT
=E1-X10	14	=E1/255.2	Feed-through terminal block PT 1,5/S	3208100	PHOENIX CONTACT
=E1-X10	15	=E1/255.3	Feed-through terminal block PT 1,5/S	3208100	PHOENIX CONTACT
=E1-X10	16	=E1/255.3	Feed-through terminal block PT 1,5/S	3208100	PHOENIX CONTACT
=E1-X10	17	=E1/255.3	Feed-through terminal block PT 1,5/S	3208100	PHOENIX CONTACT
=E1-X10	18	=E1/255.3	Feed-through terminal block PT 1,5/S	3208100	PHOENIX CONTACT
=E1-X10	19	=E1/353.3	Feed-through terminal block PT 1,5/S	3208100	PHOENIX CONTACT
=E1-X10	20	=E1/353.3	Feed-through terminal block PT 1,5/S	3208100	PHOENIX CONTACT

Parts list

TEKNIKER_v2

DEVICE TAG	PLACEMENT	DESCRIPTION	REFERENCE	MANUFACTURER
=E1-X10 21	=E1/353.4	Feed-through terminal block PT 1,5/S	3208100	PHOENIX CONTACT
=E1-X10 22	=E1/353.4	Feed-through terminal block PT 1,5/S	3208100	PHOENIX CONTACT
=E1-X10 23	=E1/353.5	Feed-through terminal block PT 1,5/S	3208100	PHOENIX CONTACT
=E1-X10 24	=E1/353.5	Feed-through terminal block PT 1,5/S	3208100	PHOENIX CONTACT
=E1-X10 25	=E1/353.6	Feed-through terminal block PT 1,5/S	3208100	PHOENIX CONTACT
=E1-X12 1A	=E1/320.1	Multi-level terminal block PT1,5/S	3213713	PHOENIX CONTACT
=E1-X12 2A	=E1/320.3	Multi-level terminal block PT1,5/S	3213713	PHOENIX CONTACT
=E1-X12 3A	=E1/320.5	Multi-level terminal block PT1,5/S	3213713	PHOENIX CONTACT
=E1-X12 4A	=E1/320.8	Multi-level terminal block PT1,5/S	3213713	PHOENIX CONTACT
=E1-X12 5A	=E1/350.1	Multi-level terminal block PT1,5/S	3213713	PHOENIX CONTACT
=E1-X12 6A	=E1/355.1	Multi-level terminal block PT1,5/S	3213713	PHOENIX CONTACT

Terminal diagram

F13_001_TK_V2

Strip

=E1+TMA-EL-CS-CBT-0102-X1

distribution terminal block

Function text	Cable name / Cable type	Target designation	Connection point	Terminal	Jumper	Wire	Target designation	Connection point	Cable name / Cable type	Page / column
24VDC EL2		-026F1	1	1		+V19	+V19			/020.2
=		-026F2	1	2		+V19	+V19			/020.2
=				3		+V19				/026.5
=				4		0V19	0V19			/020.2
=				5		0V19	0V19			/020.2
=				6		0V19				/026.5
24VDC CONTROL EL2				7		+V20	-026F1	2.1		/026.2
=		-220A30	Ul:a1	8		+V20	-220A1	Ul:a1		/221.2
=		-X12	1A	9		+V20	-X10	7		/320.0
=				10		+V20	-500A1-X1	X1		/502.4
=				11		+V20				/502.4
=				12		0V20				/026.2
=		-220A30	Ul:b1	13		0V20	-220A1	Ul:b1		/221.3
=		-X12	1B	14		0V20	-X10	8		/255.6
=				15		0V20	-500A1-X1	X1		/502.4
=				16		0V20				/502.4
24 VDC I/Os EL2				17		+V21	-026F2	2.1		/026.3
=		-220A20	1:30	18		+V21	-220A10	UIO:a1		/222.1
=		-500A1-X2	X2	19		+V21	-230K1	11		/502.4
=				20		+V21				/502.7
=				21		0V21				/026.3
=		-230K1	A2	22		0V21	-220A10	UIO:b1		/230.1
=		-500A1-X2	X2	23		0V21	-X10	25		/502.4
=				24		0V21				/502.7

IK4 TEKNIKER Research Alliance

IK4-TEKNIKER
AVDA. OTAOLA 20
20600 Eibar (Gipuzkoa) Spain
Tfno.:(+34) 943 206744
Fax: (+34) 943 202757
Web: www.tekniker.es

Date	23/02/2017				
Reviewed	F.LÓPEZ	2.3	15/12/2017	JOSE MANUEL	
Drew by	jcastano	Review	Date	Name	Review / Date / Name

3151_LSST

MCS Design Electrical Schematics

LSST TELESCOPE

Replaces | Replaced by

Terminal diagram
=E1+TMA-EL-CS-CBT-0102-X1

Customer: EMPRESARIOS AGRUPADOS
C/Magallanes, 3
28015 MADRID
91 3098000
http://www.empresariosagrupados.es/

= REPORT

+ TMA-EL-CS-CBT-0102

Terminal diagram

F13_001_TK_V2

Strip

=E1+TMA-EL-CS-CBT-0102-X10

FIELD terminal block

Function text							+TMA_E-353W4	+TMA_E-255W8	Cable name	Target designation	Connection point	Terminal	Jumper	Wire	Target designation	Connection point	Cable name	+TMA_E-701W4A				Page / column
							SHIELDED 7x1	shielded LiY-CY 12x1	Cable type								Cable type	SHIELDED 4G2,5				
400V 50Hz EL2										-020F1	1	1			+TMA-EL-UC-EC4-X8			1				/701.2
=												2										/020.4
=										-020F1	3	3			+TMA-EL-UC-EC4-X8			2				/701.2
=												4										/020.4
=										-020F1	5	5			+TMA-EL-UC-EC4-X8			3				/701.2
=												6										/020.4
HANDHELD								WH		+TMA-EL-CS-CBT-0104-255U1-X1	1	7		+V20	-X1	9						/255.1
=								BN		+TMA-EL-CS-CBT-0104-255U1-X1	2	8		0V20	-X1	14						/255.1
=								GN		+TMA-EL-CS-CBT-0104-255U1-X1	3	9		516.12	-500A15	12						/255.2
=								YE		+TMA-EL-CS-CBT-0104-255U1-X1	4	10		E806.0	-500A15	11						/255.2
=								GY		+TMA-EL-CS-CBT-0104-255U1-X1	5	11		516.13	-500A15	13						/255.2
=								PK		+TMA-EL-CS-CBT-0104-255U1-X1	6	12		E806.1	-500A15	14						/255.2
=								BU		+TMA-EL-CS-CBT-0104-255U1-X1	7	13		516.14	-500A15	22						/255.2
=								RD		+TMA-EL-CS-CBT-0104-255U1-X1	8	14		E806.2	-500A15	21						/255.2
=								BK		+TMA-EL-CS-CBT-0104-255U1-X1	9	15		516.15	-500A15	23						/255.3
=								VT		+TMA-EL-CS-CBT-0104-255U1-X1	10	16		E806.3	-500A15	24						/255.3
=								GY/PK		+TMA-EL-CS-CBT-0104-X1	1	17		513.1	-500A13	22						/255.3
=								RD/BU		+TMA-EL-CS-CBT-0104-X1	2	18		E803.2	-500A13	21						/255.3
ELEVATION -X PANEL SIGNALS							1			+TMA-EL-PD-CBT-0002-K1	13	19		222.01	-220A10	UIO:11						/353.3
=							2			+TMA-EL-PD-CBT-0002-K1	14	20		E400.1	-220A10	UIO:01						/353.3
=							3			+TMA-EL-PD-CBT-0002-K2	13	21		222.02	-220A10	UIO:12						/353.4
=							4			+TMA-EL-PD-CBT-0002-K2	14	22		E400.2	-220A10	UIO:02						/353.4
=							5			+TMA-EL-PD-CBT-0002-K2	OPEN	23		353.01	-230K1	14						/353.5
=							6			+TMA-EL-PD-CBT-0002-K2	CLOSED	24		353.02	-230K2	14						/353.5
=							7			+TMA-EL-PD-CBT-0002-K2	COM	25		0V21	-X1	23						/353.6

IK4-TEKNIKER
AVDA. OTAOLA 20
20600 Eibar (Gipuzkoa) Spain
Tfno.:(+34) 943 206744
Fax: (+34) 943 202757
Web: www.tekniker.es

Date	23/02/2017							
Reviewed	F.LÓPEZ	2.3	15/12/2017	JOSE MANUEL				
Drew by	jcastano	Review	Date	Name	Review	Date	Name	

3151_LSST — MCS Design Electrical Schematics

LSST TELESCOPE

Replaces — Replaced by

Terminal diagram
=E1+TMA-EL-CS-CBT-0102-X10

Customer: EMPRESARIOS AGRUPADOS
C/Magallanes, 3
28015 MADRID
91 3098000
http://www.empresariosagrupados.es/

= REPORT
+ TMA-EL-CS-CBT-0102

Terminal diagram

F13_001_TK_V2

Strip

=E1+TMA-EL-CS-CBT-0102-X12

4-20mA SENSORS

Function text				+TMA_E-350W7	+TMA_E-320W12	+TMA_E-320W11	+TMA_E-320W10	+TMA_E-320W9	Cable name	Target designation	Connection point	Terminal	Jumper	Wire	Target designation	Connection point	Cable name	-320W1	-320W2	-320W3	-320W4	Page / column
				LiCYC 2x0,34	LiCYC 2x0,34	LiCYC 2x0,34	LiCYC 2x0,34	LiCYC 2x0,34	Cable type								Cable type	SUPER-PAAR-TRONIC 340-C-PUR 1x2x0,34 mm²	SUPER-PAAR-TRONIC 340-C-PUR 1x2x0,34 mm²	SUPER-PAAR-TRONIC 340-C-PUR 1x2x0,34 mm²	SUPER-PAAR-TRONIC 340-C-PUR 1x2x0,34 mm²	
M1-M3 COOLING CIRCUIT IN PRESSURE								WH		+TMA_E-320X3	1	1A		+V20	-X1	9						/320.1
=										-X1	14	1B			-220A30	1:30		BN				/320.1
=								BN		+TMA_E-320X3	3	1C			-220A30	1:20		WH				/320.1
M1-M3 COOLING CIRCUIT OUT PRESSURE							WH			+TMA_E-320X4	1	2A										/320.3
=												2B			-220A30	1:31			BN			/320.3
=							BN			+TMA_E-320X4	3	2C			-220A30	1:21			WH			/320.3
EL1 CABINET COOLING CIRCUIT OUT PRESSURE						WH				+TMA_E-320X5	1	3A										/320.5
=												3B			-220A30	2:32				BN		/320.6
=						BN				+TMA_E-320X5	3	3C			-220A30	2:22				WH		/320.6
=					WH					+TMA_E-320X6	1	4A										/320.8
=												4B			-220A30	2:33					BN	/320.8
=					BN					+TMA_E-320X6	3	4C			-220A30	2:23					WH	/320.8
M1 M3 COOLING CIRCUIT OUT TEMPERATURE				WH						+TMA_E-350B7	+	5A										/350.1

◁ 2002

2003.a ▷

IK4-TEKNIKER
AVDA. OTAOLA 20
20600 Eibar (Gipuzkoa) Spain
Tfno.:(+34) 943 206744
Fax: (+34) 943 202757
Web: www.tekniker.es

Date	23/02/2017							
Reviewed	F.LÓPEZ	2.3	15/12/2017	JOSE MANUEL				
Drew by	jcastano	Review	Date	Name	Review	Date	Name	

3151_LSST
MCS Design Electrical Schematics
LSST TELESCOPE

Replaces | Replaced by

Terminal diagram
=E1+TMA-EL-CS-CBT-0102-X12

Customer: EMPRESARIOS AGRUPADOS
C/Magallanes, 3
28015 MADRID
91 3098000
http://www.empresariosagrupados.es/

= REPORT
+ TMA-EL-CS-CBT-0102

Terminal diagram

F13_001_TK_V2

Strip

=E1+TMA-EL-CS-CBT-0102-X12

4-20mA SENSORS

Function text							+TMA_E-355W2	+TMA_E-350W7	Cable name	Target designation	Connection point	Terminal	Jumper	Wire	Target designation	Connection point	Cable name	-350W1	-355W1			Page / column
							LiCYC 2x0,34	LiCYC 2x0,34	Cable type								Cable type	SUPER-PAAR-TRONIC 340-C-PUR 1x2x0,34 mm²	SUPER-PAAR-TRONIC 340-C-PUR 1x2x0,34 mm²			
M1 M3 COOLING CIRCUIT OUT TEMPERATURE												5B			-220A30	4:36		BN				/350.1
=								BN		+TMA_E-350B7	-	5C			-220A30	4:26		WH				/350.1
ECW-X compressed air outlet pressure							WH			+TMA_E-355X2	1	6A										/355.1
=												6B			-220A30	4:37			BN			/355.1
=							BN			+TMA_E-355X2	3	6C			-220A30	4:27			WH			/355.2

IK4-TEKNIKER
AVDA. OTAOLA 20
20600 Eibar (Gipuzkoa) Spain
Tfno.:(+34) 943 206744
Fax: (+34) 943 202757
Web: www.tekniker.es

Date	23/02/2017							
Reviewed	F.LÓPEZ	2.3	15/12/2017	JOSE MANUEL				
Drew by	jcastano	Review	Date	Name	Review	Date	Name	

3151_LSST

MCS Design Electrical Schematics

LSST TELESCOPE

Replaces | Replaced by

Terminal diagram
=E1+TMA-EL-CS-CBT-0102-X12

Customer: EMPRESARIOS AGRUPADOS
C/Magallanes, 3
28015 MADRID
91 3098000
http://www.empresariosagrupados.es/

= REPORT
+ TMA-EL-CS-CBT-0102

Cable diagram

F09_001_TK1

Cable ID	Cable Type	no. of conductors	cross-section	cable length	function text
=E1+TMA-EL-CS-CBT-0102-320W1	SUPER-PAAR-TRONIC 340-C-PUR 1x2x0,34 mm²	2	0,34		M1-M3 COOLING CIRCUIT IN PRESSURE

function text	X-Ref	Connected to	Pin	conductor	Connected to	Pin	X-Ref
M1-M3 COOLING CIRCUIT IN PRESSURE	/320.1	-X12	1C	**WH**	-220A30	1:20	/233.1
=	/320.1	-X12	1B	**BN**	-220A30	1:30	/233.2
=	/320.2	-320W1		**SH**	-320W1-SH		/233.2

◁ 2003.a

3002 ▷

IK4 TEKNIKER Research Alliance
IK4-TEKNIKER
AVDA. OTAOLA 20
20600 Eibar (Gipuzkoa) Spain
Tfno.:(+34) 943 206744
Fax: (+34) 943 202757
Web: www.tekniker.es

Date	23/02/2017						
Reviewed	F.LÓPEZ	2.3	15/12/2017	JOSE MANUEL			
Drew by	jcastano	Review	Date	Name	Review	Date	Name

3151_LSST MCS Design Electrical Schematics
LSST TELESCOPE

Replaces | Replaced by

Cable diagram
=E1+TMA-EL-CS-CBT-0102-320W1

Customer: EMPRESARIOS AGRUPADOS
C/Magallanes, 3
28015 MADRID
91 3098000
http://www.empresariosagrupados.es/

= REPORT
+ TMA-EL-CS-CBT-0102

Cable diagram

F09_001_TK1

Cable ID	Cable Type	no. of conductors	cross-section	cable length	function text
=E1+TMA-EL-CS-CBT-0102-320W2	SUPER-PAAR-TRONIC 340-C-PUR 1x2x0,34 mm²	2	0,34		M1-M3 COOLING CIRCUIT OUT PRESSURE

function text	X-Ref	Connected to	Pin	conductor	Connected to	Pin	X-Ref
M1-M3 COOLING CIRCUIT OUT PRESSURE	/320.3	-X12	2C	**WH**	-220A30	1:21	/233.2
=	/320.3	-X12	2B	**BN**	-220A30	1:31	/233.3
=	/320.4	-320W2		**SH**	-320W2-SH		/233.3

IK4 TEKNIKER Research Alliance

IK4-TEKNIKER
AVDA. OTAOLA 20
20600 Eibar (Gipuzkoa) Spain
Tfno.:(+34) 943 206744
Fax: (+34) 943 202757
Web: www.tekniker.es

Date	23/02/2017						
Reviewed	F.LÓPEZ	2.3	15/12/2017	JOSE MANUEL			
Drew by	jcastano	Review	Date	Name	Review	Date	Name

3151_LSST

MCS Design Electrical Schematics

LSST TELESCOPE

Replaces

Replaced by

Cable diagram
=E1+TMA-EL-CS-CBT-0102-320W2

Customer:

EMPRESARIOS AGRUPADOS

EMPRESARIOS AGRUPADOS
C/Magallanes, 3
28015 MADRID
91 3098000

http://www.empresariosagrupados.es/

= REPORT

+ TMA-EL-CS-CBT-0102

Cable diagram

F09_001_TK1

Cable ID	Cable Type	no. of conductors	cross-section	cable length	function text
=E1+TMA-EL-CS-CBT-0102-320W3	SUPER-PAAR-TRONIC 340-C-PUR 1x2x0,34 mm²	2	0,34		EL1 CABINET COOLING CIRCUIT OUT PRESSURE

function text	X-Ref	Connected to	Pin	conductor	Connected to	Pin	X-Ref
EL1 CABINET COOLING CIRCUIT OUT PRESSURE	/320.6	-X12	3C	**WH**	-220A30	2:22	/233.3
=	/320.6	-X12	3B	**BN**	-220A30	2:32	/233.4
=	/320.6	-320W3		**SH**	-320W3-SH		/233.4

◁ 3002

3004 ▷

IK4 TEKNIKER Research Alliance
IK4-TEKNIKER
AVDA. OTAOLA 20
20600 Eibar (Gipuzkoa) Spain
Tfno.:(+34) 943 206744
Fax: (+34) 943 202757
Web: www.tekniker.es

Date	23/02/2017						
Reviewed	F.LÓPEZ	2.3	15/12/2017	JOSE MANUEL			
Drew by	jcastano	Review	Date	Name	Review	Date	Name

3151_LSST

MCS Design Electrical Schematics

LSST TELESCOPE

Replaces

Replaced by

Cable diagram
=E1+TMA-EL-CS-CBT-0102-320W3

Customer:

EMPRESARIOS AGRUPADOS

EMPRESARIOS AGRUPADOS
C/Magallanes, 3
28015 MADRID
91 3098000
http://www.empresariosagrupados.es/

= REPORT
+ TMA-EL-CS-CBT-0102

Cable diagram

F09_001_TK1

Cable ID	Cable Type	no. of conductors	cross-section	cable length	function text
=E1+TMA-EL-CS-CBT-0102-320W4	SUPER-PAAR-TRONIC 340-C-PUR 1x2x0,34 mm²	2	0,34		EL1 CABINET COOLING CIRCUIT OUT PRESSURE

function text	X-Ref	Connected to	Pin	conductor	Connected to	Pin	X-Ref
EL1 CABINET COOLING CIRCUIT OUT PRESSURE	/320.8	-X12	4C	**WH**	-220A30	2:23	/233.4
=	/320.8	-X12	4B	**BN**	-220A30	2:33	/233.4
=	/320.8	-320W4		**SH**	-320W4-SH		/233.5

IK4 TEKNIKER Research Alliance

IK4-TEKNIKER
AVDA. OTAOLA 20
20600 Eibar (Gipuzkoa) Spain
Tfno.:(+34) 943 206744
Fax: (+34) 943 202757
Web: www.tekniker.es

Date	23/02/2017						
Reviewed	F.LÓPEZ	2.3	15/12/2017	JOSE MANUEL			
Drew by	jcastano	Review	Date	Name	Review	Date	Name

3151_LSST — MCS Design Electrical Schematics

LSST TELESCOPE

Replaces — Replaced by

Cable diagram
=E1+TMA-EL-CS-CBT-0102-320W4

Customer: EMPRESARIOS AGRUPADOS
C/Magallanes, 3
28015 MADRID
91 3098000
http://www.empresariosagrupados.es/

= REPORT
+ TMA-EL-CS-CBT-0102

Cable diagram

F09_001_TK1

Cable ID	Cable Type	no. of conductors	cross-section	cable length	function text
=E1+TMA-EL-CS-CBT-0102-350W1	SUPER-PAAR-TRONIC 340-C-PUR 1x2x0,34 mm²	2	0,34		M1 M3 COOLING CIRCUIT OUT TEMPERATURE

function text	X-Ref	Connected to	Pin	conductor	Connected to	Pin	X-Ref
M1 M3 COOLING CIRCUIT OUT TEMPERATURE	/350.1	-X12	5C	**WH**	-220A30	4:26	/233.7
=	/350.1	-X12	5B	**BN**	-220A30	4:36	/233.7
=	/350.2	-350W1		**SH**	-350W1-SH		/233.7

IK4 TEKNIKER Research Alliance

IK4-TEKNIKER
AVDA. OTAOLA 20
20600 Eibar (Gipuzkoa) Spain
Tfno.:(+34) 943 206744
Fax: (+34) 943 202757
Web: www.tekniker.es

Date	23/02/2017						
Reviewed	F.LÓPEZ	2.3	15/12/2017	JOSE MANUEL			
Drew by	jcastano	Review	Date	Name	Review	Date	Name

3151_LSST

MCS Design Electrical Schematics

LSST TELESCOPE

Replaces

Replaced by

Cable diagram
=E1+TMA-EL-CS-CBT-0102-350W1

Customer:

EMPRESARIOS AGRUPADOS

EMPRESARIOS AGRUPADOS
C/Magallanes, 3
28015 MADRID
91 3098000

http://www.empresariosagrupados.es/

= REPORT

+ TMA-EL-CS-CBT-0102

Cable diagram

F09_001_TK1

Cable ID	Cable Type	no. of conductors	cross-section	cable length	function text
=E1+TMA-EL-CS-CBT-0102-355W1	SUPER-PAAR-TRONIC 340-C-PUR 1x2x0,34 mm²	2	0,34		ECW-X compressed air outlet pressure

function text	X-Ref	Connected to	Pin	conductor	Connected to	Pin	X-Ref
ECW-X compressed air outlet pressure	/355.2	-X12	6C	**WH**	-220A30	4:27	/233.7
=	/355.1	-X12	6B	**BN**	-220A30	4:37	/233.8
=	/355.2	-355W1		**SH**	-355W1-SH		/233.8

◁ 3005

+TMA-PI-CS-CBT-0101/001 ▷

IK4-TEKNIKER
AVDA. OTAOLA 20
20600 Eibar (Gipuzkoa) Spain
Tfno.:(+34) 943 206744
Fax: (+34) 943 202757
Web: www.tekniker.es

Date	23/02/2017						
Reviewed	F.LÓPEZ	2.3	15/12/2017	JOSE MANUEL			
Drew by	jcastano	Review	Date	Name	Review	Date	Name

3151_LSST

MCS Design Electrical Schematics

LSST TELESCOPE

Replaces

Replaced by

Cable diagram
=E1+TMA-EL-CS-CBT-0102-355W1

Customer:

EMPRESARIOS AGRUPADOS
C/Magallanes, 3
28015 MADRID
91 3098000

http://www.empresariosagrupados.es/

= REPORT

+ TMA-EL-CS-CBT-0102

Customer

EMPRESARIOS AGRUPADOS

EMPRESARIOS AGRUPADOS
C/Magallanes, 3
28015 MADRID
ESPAÑA
91 3098000

http://www.empresariosagrupados.es/

Project:

3151_LSST
MCS Design Electrical Schematics
LSST TELESCOPE

REPORT
GENERAL REPORT

TMA-PI-CS-CBT-0101
AUXILIARY AZIMUTH CABLE WRAP BOX PIER

Number of pages: 710

Made by:

IK4-TEKNIKER
AVDA. OTAOLA 20
20600 Eibar (Gipuzkoa) Spain
Tfno. : (+34) 943 206744
Fax : (+34) 943 202757
Web: www.tekniker.es

Review	Review description	Date	Reviewed
2.3	VERSION INTERMEDIA PARA MONTAJE ASTURFEITO (SIN EVALUACIONES)	15/12/2017	JOSE MANUEL

Drew by: J.M.CASTAÑO

Reviewed: F.LÓPEZ

Date: 16/12/2015

Replaces:

Replaced by:

Parts list

TEKNIKER_v2

DEVICE TAG	PLACEMENT	DESCRIPTION	REFERENCE	MANUFACTURER
=E1-220A1	=E1/220.0	Bus coupler	AXL F BK EC 2688899	PHOENIX CONTACT
=E1-220A10	=E1/220.1	I/O module	2688022	PHOENIX CONTACT
=E1-220A20	=E1/220.2	I/O module	2700608	PHOENIX CONTACT
=E1-220A30	=E1/220.4	I/O module	2688064	PHOENIX CONTACT
=E1-220A31	=E1/220.5	I/O module	2688064	PHOENIX CONTACT
=E1-220A32	=E1/220.6	I/O module	2688064	PHOENIX CONTACT
=E1-220A40	=E1 (EC5.S14)	I/O module	2688556	PHOENIX CONTACT
=E1-500A1	=E1/500.1	PSSu head module	PSSu H FS SN SDT 314 085	PILZ
=E1-500A1	=E1/500.1	TERMINALS	PSSu A Con 2/8 C 313 111	PILZ
=E1-500A10	=E1/500.3	Safety digital input module	PSSu E F 4DI-T 314 200	PILZ
=E1-500A10	=E1/500.3	Base module Cage clamp terminal	PSSu BP 1/8 C-T 314 601	PILZ
=E1-500A11	=E1/500.3	Safety digital input module	PSSu E F 4DI-T 314 200	PILZ
=E1-500A11	=E1/500.3	Base module Cage clamp terminal	PSSu BP 1/8 C-T 314 601	PILZ
=E1-500A12	=E1/500.3	Safety digital input module	PSSu E F 4DI-T 314 200	PILZ
=E1-500A12	=E1/500.3	Base module Cage clamp terminal	PSSu BP 1/8 C-T 314 601	PILZ
=E1-500A13	=E1/500.3	Safety digital input module	PSSu E F 4DI-T 314 200	PILZ
=E1-500A13	=E1/500.3	Base module Cage clamp terminal	PSSu BP 1/8 C-T 314 601	PILZ
=E1-500A60	=E1/500.3	Safety count module	PSSu E F INC-T 314 280	PILZ
=E1-500A60	=E1/500.3	Base module Cage clamp terminal	PSSu BP 2/16 C-T 314 629	PILZ
=E1-501A1	=E1/501.3	SWITCH ETHERNET	EDS408-MM-SC-7	MOXA
=E1-020F1	=E1/020.2	Miniature Circuit Breaker C 10A	A9F79310	SCHNEIDER ELECTRIC
=E1-026F1	=E1/026.2	Base element	2800929	PHOENIX CONTACT
=E1-026F1	=E1/026.2	Plug-in bridge	3030255	PHOENIX CONTACT
=E1-026F1	=E1/026.2	Plug-in bridge	3036958	PHOENIX CONTACT
=E1-026F1-F1	=E1/026.2	Thermomagnetic device circuit breaker	2800850	PHOENIX CONTACT
=E1-026F1-F1	=E1 (EC5.S14)	Electronic device circuit breaker	2800904	PHOENIX CONTACT
=E1-026F2	=E1/026.3	Base element	2800929	PHOENIX CONTACT
=E1-026F2-F2	=E1/026.3	Thermomagnetic device circuit breaker	2800854	PHOENIX CONTACT
=E1-026F2-F2	=E1 (EC5.S14)	Electronic device circuit breaker	2800907	PHOENIX CONTACT
=E1-020G1	=E1/020.1	Power supply unit	2866792	PHOENIX CONTACT
=E1-PE	=E1/701.2	earth busbar	550220 TCB 20x5	ERICO
=E1-PE	=E1 (EC5.S14)	earth busbar	550220 TCB 20x5	ERICO
=E1-222S1	=E1/222.6	Cabinet Door switch	SZ 4127.010	RITTAL
=E1-701SH1 1	=E1/701.4	Connection terminal block	0404017	PHOENIX CONTACT
=E1-701SH1 1	=E1/701.4	Support bracket	0404428	PHOENIX CONTACT
=E1-701SH1 1	=E1/701.4	Support bracket	0404428	PHOENIX CONTACT
=E1-701SH1 1	=E1/701.4	Neutral busbar	0402174	PHOENIX CONTACT
=E1-701SH1 1	=E1 (EC5.S14)	Support bracket	0404428	PHOENIX CONTACT
=E1-701SH1 1	=E1 (EC5.S14)	Support bracket	0404428	PHOENIX CONTACT

Parts list

TEKNIKER_v2

DEVICE TAG		PLACEMENT	DESCRIPTION	REFERENCE	MANUFACTURER
=E1-701SH1	1	=E1 (EC5.S14)	Neutral busbar	0402174	PHOENIX CONTACT
=E1-701SH2	1	=E1/701.4	Connection terminal block	0404017	PHOENIX CONTACT
=E1-701SH2	1	=E1/701.4	Support bracket	0404428	PHOENIX CONTACT
=E1-701SH2	1	=E1/701.4	Support bracket	0404428	PHOENIX CONTACT
=E1-701SH2	1	=E1/701.4	Neutral busbar	0402174	PHOENIX CONTACT
=E1-701SH2	1	=E1 (EC5.S14)	Support bracket	0404428	PHOENIX CONTACT
=E1-701SH2	1	=E1 (EC5.S14)	Support bracket	0404428	PHOENIX CONTACT
=E1-701SH2	1	=E1 (EC5.S14)	Neutral busbar	0402174	PHOENIX CONTACT
=E1-U35		=E1 (EC5.S14)	Unex slotted trunking 80x43 in U23X	80.40.77	UNEX
=E1-U36		=E1 (EC5.S14)	Unex slotted trunking 80x30 in U23X	80.30.77	UNEX
=E1-U37		=E1 (EC5.S14)	Unex slotted trunking 80x30 in U23X	80.30.77	UNEX
=E1-U38		=E1 (EC5.S14)	Mounting rail EN 50 022 (35x15)	TS 35_15	...
=E1-U39		=E1 (EC5.S14)	Mounting rail EN 50 022 (35x15)	TS 35_15	...
=E1-U40		=E1 (EC5.S14)	Unex slotted trunking 80x30 in U23X	80.30.77	UNEX
=E1-U41		=E1 (EC5.S14)	Unex slotted trunking 80x30 in U23X	80.30.77	UNEX
=E1-U42		=E1 (EC5.S14)	Mounting rail EN 50 022 (35x15)	TS 35_15	...
=E1-U43		=E1 (EC5.S14)	Unex slotted trunking 80x43 in U23X	80.40.77	UNEX
=E1-U50		=E1 (EC5.S14)	NSYS3D6G8630P	NSYS3D6G8630P	SCHNEIDER ELECTRIC
=E1-020U1		=E1/020.6	DC/DC CONVERTER	DDC1524S03 FARNELL: 2475871	XPPOWER
=E1-325U1		=E1/325.0	LUBRICATION SYSTEM	BKI 101 e	ATLANTA
=E1-325U2		=E1/325.4	LUBRICATION SYSTEM	BKI 101 e	ATLANTA
=E1-235W1		=E1/235.2	UL/CSA SUPER-PAAR-TRONIC 340-C-PUR 6x2x0,5 mm²	49853	HELUKABEL
=E1-325W3		=E1/325.0	UL/CSA Control Cable JZ-602-CY 9G1,5 mm² GY	82973	HELUKABEL
=E1-325W6		=E1/325.4	UL/CSA Control Cable JZ-602-CY 9G1,5 mm² GY	82973	HELUKABEL
=E1-327W1		=E1/327.2	UL/CSA Cable for Drag Chains SUPER-PAAR-TRONIC 340-C-PUR 1x2x0,34 mm² (22 AWG) GY	49839	HELUKABEL
=E1-327W2		=E1/327.5	UL/CSA Cable for Drag Chains SUPER-PAAR-TRONIC 340-C-PUR 1x2x0,34 mm² (22 AWG) GY	49839	HELUKABEL
=E1-328W1		=E1/328.2	UL/CSA Cable for Drag Chains SUPER-PAAR-TRONIC 340-C-PUR 1x2x0,34 mm² (22 AWG) GY	49839	HELUKABEL
=E1-328W2		=E1/328.5	UL/CSA Cable for Drag Chains SUPER-PAAR-TRONIC 340-C-PUR 1x2x0,34 mm² (22 AWG) GY	49839	HELUKABEL
=E1-335W1		=E1/335.2	UL/CSA Cable for Drag Chains SUPER-PAAR-TRONIC 340-C-PUR 1x2x0,34 mm² (22 AWG) GY	49839	HELUKABEL
=E1-335W2		=E1/335.4	UL/CSA Cable for Drag Chains SUPER-PAAR-TRONIC 340-C-PUR 1x2x0,34 mm² (22 AWG) GY	49839	HELUKABEL
=E1-350W1		=E1/350.2	UL/CSA Cable for Drag Chains SUPER-PAAR-TRONIC 340-C-PUR 1x2x0,34 mm² (22 AWG) GY	49839	HELUKABEL
=E1-350W2		=E1/350.5	UL/CSA Cable for Drag Chains SUPER-PAAR-TRONIC 340-C-PUR 1x2x0,34 mm² (22 AWG) GY	49839	HELUKABEL
=E1-351W1		=E1/351.2	UL/CSA Cable for Drag Chains SUPER-PAAR-TRONIC 340-C-PUR 1x2x0,34 mm² (22 AWG) GY	49839	HELUKABEL
=E1-351W2		=E1/351.5	UL/CSA Cable for Drag Chains SUPER-PAAR-TRONIC 340-C-PUR 1x2x0,34 mm² (22 AWG) GY	49839	HELUKABEL
=E1-352W1		=E1/352.2	UL/CSA Cable for Drag Chains SUPER-PAAR-TRONIC 340-C-PUR 1x2x0,34 mm² (22 AWG) GY	49839	HELUKABEL
=E1-352W2		=E1/352.5	UL/CSA Cable for Drag Chains SUPER-PAAR-TRONIC 340-C-PUR 1x2x0,34 mm² (22 AWG) GY	49839	HELUKABEL
=E1-501W1		=E1/501.0	YELOW ETH CABLE	BLB.C6PC70S-YE-5	BLACK BOX
=E1-X1	1	=E1/020.2	Feed-through terminal block "Push-in" PT 2,5	3209510	PHOENIX CONTACT
=E1-X1	1	=E1/020.2	2,5/4-1,5/S reduction busbar	3214356	PHOENIX CONTACT

Parts list

TEKNIKER_v2

DEVICE TAG		PLACEMENT	DESCRIPTION	REFERENCE	MANUFACTURER
=E1-X1	2	=E1/020.2	Feed-through terminal block "Push-in" PT 2,5	3209510	PHOENIX CONTACT
=E1-X1	3	=E1/026.5	Feed-through terminal block "Push-in" PT 2,5	3209510	PHOENIX CONTACT
=E1-X1	4	=E1/020.2	Feed-through terminal block "Push-in" PT 2,5	3209510	PHOENIX CONTACT
=E1-X1	5	=E1/020.2	Feed-through terminal block "Push-in" PT 2,5	3209510	PHOENIX CONTACT
=E1-X1	6	=E1/026.5	Feed-through terminal block "Push-in" PT 2,5	3209510	PHOENIX CONTACT
=E1-X1	7	=E1/020.6	Feed-through terminal block "Push-in" PT 2,5	3209510	PHOENIX CONTACT
=E1-X1	8	=E1/325.6	Feed-through terminal block PT 1,5/S	3208100	PHOENIX CONTACT
=E1-X1	9	=E1/020.6	Feed-through terminal block PT 1,5/S	3208100	PHOENIX CONTACT
=E1-X1	9	=E1/020.6	5 PT1,5 busbar	3213043	PHOENIX CONTACT
=E1-X1	10	=E1/325.6	Feed-through terminal block PT 1,5/S	3208100	PHOENIX CONTACT
=E1-X1	11	=E1/026.2	Feed-through terminal block "Push-in" PT 2,5	3209510	PHOENIX CONTACT
=E1-X1	11	=E1/026.2	2,5/4-1,5/S reduction busbar	3214356	PHOENIX CONTACT
=E1-X1	12	=E1/020.7	Feed-through terminal block PT 1,5/S	3208100	PHOENIX CONTACT
=E1-X1	12	=E1/020.7	4 PT 1,5 busbar	FBS 4-3,5 3213030	PHOENIX CONTACT
=E1-X1	13	=E1/327.1	Feed-through terminal block PT 1,5/S	3208100	PHOENIX CONTACT
=E1-X1	14	=E1/502.3	Feed-through terminal block PT 1,5/S	3208100	PHOENIX CONTACT
=E1-X1	15	=E1/502.4	Feed-through terminal block PT 1,5/S	3208100	PHOENIX CONTACT
=E1-X1	16	=E1/026.2	Feed-through terminal block "Push-in" PT 2,5	3209510	PHOENIX CONTACT
=E1-X1	16	=E1/026.2	2,5/4-1,5/S reduction busbar	3214356	PHOENIX CONTACT
=E1-X1	17	=E1/020.7	Feed-through terminal block PT 1,5/S	3208100	PHOENIX CONTACT
=E1-X1	17	=E1/020.7	4 PT 1,5 busbar	FBS 4-3,5 3213030	PHOENIX CONTACT
=E1-X1	18	=E1/327.0	Feed-through terminal block PT 1,5/S	3208100	PHOENIX CONTACT
=E1-X1	19	=E1/502.3	Feed-through terminal block PT 1,5/S	3208100	PHOENIX CONTACT
=E1-X1	20	=E1/502.4	Feed-through terminal block PT 1,5/S	3208100	PHOENIX CONTACT
=E1-X1	21	=E1/026.3	Feed-through terminal block "Push-in" PT 2,5	3209510	PHOENIX CONTACT
=E1-X1	21	=E1/026.3	2,5/4-1,5/S reduction busbar	3214356	PHOENIX CONTACT
=E1-X1	22	=E1/222.1	Feed-through terminal block PT 1,5/S	3208100	PHOENIX CONTACT
=E1-X1	22	=E1/222.1	3 pt-1,5 busbar	3213027	PHOENIX CONTACT
=E1-X1	23	=E1/502.5	Feed-through terminal block PT 1,5/S	3208100	PHOENIX CONTACT
=E1-X1	24	=E1/502.6	Feed-through terminal block PT 1,5/S	3208100	PHOENIX CONTACT
=E1-X1	25	=E1/026.3	Feed-through terminal block "Push-in" PT 2,5	3209510	PHOENIX CONTACT
=E1-X1	25	=E1/026.3	2,5/4-1,5/S reduction busbar	3214356	PHOENIX CONTACT
=E1-X1	26	=E1/501.4	Feed-through terminal block PT 1,5/S	3208100	PHOENIX CONTACT
=E1-X1	26	=E1/501.4	3 pt-1,5 busbar	3213027	PHOENIX CONTACT
=E1-X1	27	=E1/502.5	Feed-through terminal block PT 1,5/S	3208100	PHOENIX CONTACT
=E1-X1	28	=E1/502.6	Feed-through terminal block PT 1,5/S	3208100	PHOENIX CONTACT
=E1-X10	1	=E1/701.2	Feed-through terminal block "Push-in" PT 2,5	3209510	PHOENIX CONTACT
=E1-X10	1	=E1/701.2	2 ST2,5 busbar	3030161	PHOENIX CONTACT
=E1-X10	2	=E1/020.4	Feed-through terminal block "Push-in" PT 2,5	3209510	PHOENIX CONTACT

Parts list

TEKNIKER_v2

DEVICE TAG		PLACEMENT	DESCRIPTION	REFERENCE	MANUFACTURER
=E1-X10	3	=E1/701.2	Feed-through terminal block "Push-in" PT 2,5	3209510	PHOENIX CONTACT
=E1-X10	3	=E1/701.2	2 ST2,5 busbar	3030161	PHOENIX CONTACT
=E1-X10	4	=E1/020.4	Feed-through terminal block "Push-in" PT 2,5	3209510	PHOENIX CONTACT
=E1-X10	5	=E1/701.2	Feed-through terminal block "Push-in" PT 2,5	3209510	PHOENIX CONTACT
=E1-X10	5	=E1/701.2	2 ST2,5 busbar	3030161	PHOENIX CONTACT
=E1-X10	6	=E1/020.4	Feed-through terminal block "Push-in" PT 2,5	3209510	PHOENIX CONTACT
=E1-X10	7	=E1/325.0	Feed-through terminal block PT 1,5/S	3208100	PHOENIX CONTACT
=E1-X10	8	=E1/325.1	Feed-through terminal block PT 1,5/S	3208100	PHOENIX CONTACT
=E1-X10	9	=E1/325.1	Feed-through terminal block PT 1,5/S	3208100	PHOENIX CONTACT
=E1-X10	10	=E1/325.1	Feed-through terminal block PT 1,5/S	3208100	PHOENIX CONTACT
=E1-X10	11	=E1/325.2	Feed-through terminal block PT 1,5/S	3208100	PHOENIX CONTACT
=E1-X10	12	=E1/325.2	Feed-through terminal block PT 1,5/S	3208100	PHOENIX CONTACT
=E1-X10	13	=E1/325.3	Feed-through terminal block PT 1,5/S	3208100	PHOENIX CONTACT
=E1-X10	14	=E1/325.4	Feed-through terminal block PT 1,5/S	3208100	PHOENIX CONTACT
=E1-X10	15	=E1/325.5	Feed-through terminal block PT 1,5/S	3208100	PHOENIX CONTACT
=E1-X10	16	=E1/325.5	Feed-through terminal block PT 1,5/S	3208100	PHOENIX CONTACT
=E1-X10	17	=E1/325.5	Feed-through terminal block PT 1,5/S	3208100	PHOENIX CONTACT
=E1-X10	18	=E1/325.6	Feed-through terminal block PT 1,5/S	3208100	PHOENIX CONTACT
=E1-X10	19	=E1/325.6	Feed-through terminal block PT 1,5/S	3208100	PHOENIX CONTACT
=E1-X10	20	=E1/325.6	Feed-through terminal block PT 1,5/S	3208100	PHOENIX CONTACT
=E1-X10	21	=E1/353.1	Feed-through terminal block PT 1,5/S	3208100	PHOENIX CONTACT
=E1-X10	22	=E1/353.2	Feed-through terminal block PT 1,5/S	3208100	PHOENIX CONTACT
=E1-X10	23	=E1/353.2	Feed-through terminal block PT 1,5/S	3208100	PHOENIX CONTACT
=E1-X10	24	=E1/353.2	Feed-through terminal block PT 1,5/S	3208100	PHOENIX CONTACT
=E1-X10	25	=E1/353.3	Feed-through terminal block PT 1,5/S	3208100	PHOENIX CONTACT
=E1-X10	26	=E1/353.3	Feed-through terminal block PT 1,5/S	3208100	PHOENIX CONTACT
=E1-X10	27	=E1/353.4	Feed-through terminal block PT 1,5/S	3208100	PHOENIX CONTACT
=E1-X10	28	=E1/353.4	Feed-through terminal block PT 1,5/S	3208100	PHOENIX CONTACT
=E1-X10	29	=E1/353.5	Feed-through terminal block PT 1,5/S	3208100	PHOENIX CONTACT
=E1-X10	30	=E1/353.6	Feed-through terminal block PT 1,5/S	3208100	PHOENIX CONTACT
=E1-X10	31	=E1/353.6	Feed-through terminal block PT 1,5/S	3208100	PHOENIX CONTACT
=E1-X10	32	=E1/353.7	Feed-through terminal block PT 1,5/S	3208100	PHOENIX CONTACT
=E1-X10	33	=E1/353.8	Feed-through terminal block PT 1,5/S	3208100	PHOENIX CONTACT
=E1-X10	34	=E1/353.8	Feed-through terminal block PT 1,5/S	3208100	PHOENIX CONTACT
=E1-X12	1A	=E1/327.1	Multi-level terminal block PT1,5/S	3213713	PHOENIX CONTACT
=E1-X12	2A	=E1/327.4	Multi-level terminal block PT1,5/S	3213713	PHOENIX CONTACT
=E1-X12	3A	=E1/328.1	Multi-level terminal block PT1,5/S	3213713	PHOENIX CONTACT
=E1-X12	4A	=E1/328.4	Multi-level terminal block PT1,5/S	3213713	PHOENIX CONTACT
=E1-X12	5A	=E1/335.1	Multi-level terminal block PT1,5/S	3213713	PHOENIX CONTACT

Parts list

TEKNIKER_v2

DEVICE TAG	PLACEMENT	DESCRIPTION	REFERENCE	MANUFACTURER
=E1-X12 6A	=E1/335.3	Multi-level terminal block PT1,5/S	3213713	PHOENIX CONTACT
=E1-X12 7A	=E1/350.1	Multi-level terminal block PT1,5/S	3213713	PHOENIX CONTACT
=E1-X12 8A	=E1/350.4	Multi-level terminal block PT1,5/S	3213713	PHOENIX CONTACT
=E1-X12 9A	=E1/351.1	Multi-level terminal block PT1,5/S	3213713	PHOENIX CONTACT
=E1-X12 10A	=E1/351.4	Multi-level terminal block PT1,5/S	3213713	PHOENIX CONTACT
=E1-X12 11A	=E1/352.1	Multi-level terminal block PT1,5/S	3213713	PHOENIX CONTACT
=E1-X12 12A	=E1/352.4	Multi-level terminal block PT1,5/S	3213713	PHOENIX CONTACT
=E1-X13 1	=E1/545.8	Feed-through terminal block PT 1,5/S	3208100	PHOENIX CONTACT
=E1-X13 2	=E1/545.8	Feed-through terminal block PT 1,5/S	3208100	PHOENIX CONTACT
=E1-X13 3	=E1/545.9	Feed-through terminal block PT 1,5/S	3208100	PHOENIX CONTACT

Terminal diagram

F13_001_TK_V2

Strip

=E1+TMA-PI-CS-CBT-0101-X1

distribution terminal block

Function text	Target designation	Connection point	Terminal	Jumper	Wire	Target designation	Connection point	Page / column
24 VDC PIER	-026F1	1	1		+V7	+V7		/020.2
=	-026F2	1	2		+V7	+V7		/020.2
=			3		+V7			/026.5
=			4		0V7	0V7		/020.2
=			5		0V7	0V7		/020.2
=			6		0V7			/026.5
3,3VDC PIER	-X10	7	7		V22	+V22		/020.6
=			8		V22	-X10	14	/325.6
=	-X10	8	9		0V22	0V22		/020.6
=			10		0V22	-X10	15	/325.6
24 VDC CONTROL PIER			11		+V8	-026F1	2.1	/026.2
=	-220A1	Ul:a1	12		+V8	-020U1-VIN	1	/020.7
=	-X12	1A	13		+V8	-220A30	Ul:a1	/327.1
=	-500A1-X1	X1	14		+V8	-501A1-VIN	1	/502.3
=			15		+V8			/502.4
=			16		0V8			/026.2
=	-220A1	Ul:b1	17		0V8	-020U1-VIN	2	/020.7
=	-X12	1B	18		0V8	-220A30	Ul:b1	/327.0
=	-500A1-X1	X1	19		0V8	-501A1-VIN	2	/502.3
=			20		0V8			/502.4
24 VDC I/Os PIER			21		+V9	-026F2	2.1	/026.3
=	-501A1-VIN	5	22		+V9	-220A10	UIO:a1	/222.1
=			23		+V9	-500A1-X2	X2	/502.5
=			24		+V9			/502.6
=			25		0V9			/026.3
=	-501A1-VIN	6	26		0V9	-220A10	UIO:b1	/501.4
=			27		0V9	-500A1-X2	X2	/502.5
=			28		0V9			/502.6

IK4-TEKNIKER
AVDA. OTAOLA 20
20600 Eibar (Gipuzkoa) Spain
Tfno.:(+34) 943 206744
Fax: (+34) 943 202757
Web: www.tekniker.es

Date	23/02/2017					
Reviewed	F.LÓPEZ	2.3	15/12/2017	JOSE MANUEL		
Drew by	jcastano	Review	Date	Name	Review	Date	Name

3151_LSST

MCS Design Electrical Schematics

LSST TELESCOPE

Replaces | Replaced by

Terminal diagram
=E1+TMA-PI-CS-CBT-0101-X1

Customer: EMPRESARIOS AGRUPADOS
C/Magallanes, 3
28015 MADRID
91 3098000
http://www.empresariosagrupados.es/

= REPORT
+ TMA-PI-CS-CBT-0101

Terminal diagram

F13_001_TK_V2

Strip
=E1+TMA-PI-CS-CBT-0101-X10
FIELD terminal block

Function text						+TMA_E-353W1	-325W6	-325W3	Cable name	Target designation	Connection point	Terminal	Jumper	Wire	Target designation	Connection point	Cable name	+TMA_E-701W1A	-235W1			Page / column
						SHIELDED PAAR 7x2x0,75	1Z-602-CY 9G1,5	1Z-602-CY 9G1,5	Cable type								Cable type	shielded 4G2,5	SUPER-PAAR-TRONIC 6x2x0,5 mm²			
400V 50Hz PIER										-020F1	1	1			+TMA-PI-UC-AC1-X9			1				/701.2
=												2										/020.4
=										-020F1	3	3			+TMA-PI-UC-AC1-X9			2				/701.2
=												4										/020.4
=										-020F1	5	5			+TMA-PI-UC-AC1-X9			3				/701.2
=												6										/020.4
AZIMUTH CABLE WRAP PINION 1 LUBRICACION								1		+TMA-PI-CS-CBT-0102-X1	1	7		V22	-X1	7						/325.0
=								2		+TMA-PI-CS-CBT-0102-X1	2	8		0V22	-X1	9						/325.1
=								3		+TMA-PI-CS-CBT-0102-X1	3	9		A100.0	-220A20	1:10						/325.1
=								4		+TMA-PI-CS-CBT-0102-X1	4	10		230.01	-220A20	1:20						/325.1
=								5		+TMA-PI-CS-CBT-0102-X1	5	11		222.01	-220A10	UIO:13						/325.2
=								6		+TMA-PI-CS-CBT-0102-X1	6	12		222.02	-220A10	UIO:23						/325.2
=								7		+TMA-PI-CS-CBT-0102-X1	7	13		E100.3	-220A10	UIO:03						/325.3
AZIMUTH CABLE WRAP PINION 2 LUBRICATION							1			+TMA-PI-CS-CBT-0103-X1	1	14		V22	-X1	8						/325.4
=							2			+TMA-PI-CS-CBT-0103-X1	2	15		0V22	-X1	10						/325.5
=							3			+TMA-PI-CS-CBT-0103-X1	3	16		A100.1	-220A20	2:11						/325.5
=							4			+TMA-PI-CS-CBT-0103-X1	4	17		230.02	-220A20	2:21						/325.5
=							5			+TMA-PI-CS-CBT-0103-X1	5	18		222.03	-220A10	UIO:14						/325.6
=							6			+TMA-PI-CS-CBT-0103-X1	6	19		222.04	-220A10	UIO:24						/325.6
=							7			+TMA-PI-CS-CBT-0103-X1	7	20		E100.4	-220A10	UIO:04						/325.6
Main Panel signals						WH				+TMA-PI-PD-CBT-0001-353K1	13	21		222.09	-220A10	UIO:11						/353.1
=						BN				+TMA-PI-PD-CBT-0001-353K1	14	22		E100.1	-220A10	UIO:01						/353.2
=						GN				+TMA-PI-PD-CBT-0001-353U1	+	23			-220A32	1:00			WH			/353.2
=						YE				+TMA-PI-PD-CBT-0001-353U1	-	24			-220A32	1:10			BN			/353.2
=						GY				+TMA-PI-PD-CBT-0001-353U2	+	25			-220A32	1:01			GN			/353.3
=						PK				+TMA-PI-PD-CBT-0001-353U2	-	26			-220A32	1:11			YE			/353.3
=						BU				+TMA-PI-PD-CBT-0001-353U3	+	27			-220A32	2:02			GY			/353.4
=						RD				+TMA-PI-PD-CBT-0001-353U3	-	28			-220A32	2:12			PK			/353.4
=						BK				+TMA-PI-PD-CBT-0001-353U4	+	29			-220A32	2:03			BU			/353.5
=						VT				+TMA-PI-PD-CBT-0001-353U4	-	30			-220A32	2:13			RD			/353.6
=						GY/PK				+TMA-PI-PD-CBT-0001-353U5	+	31			-220A32	3:04			BK			/353.6
=						RD/BU				+TMA-PI-PD-CBT-0001-353U5	-	32			-220A32	3:14			VT			/353.7
=						WH/GN				+TMA-PI-PD-CBT-0001-353U6	+	33			-220A32	3:05			GYPK			/353.8
=						BN/GN				+TMA-PI-PD-CBT-0001-353U6	-	34			-220A32	3:15			RDBU			/353.8

IK4 TEKNIKER Research Alliance

IK4-TEKNIKER
AVDA. OTAOLA 20
20600 Eibar (Gipuzkoa) Spain
Tfno.:(+34) 943 206744
Fax: (+34) 943 202757
Web: www.tekniker.es

Date	23/02/2017						
Reviewed	F.LÓPEZ	2.3	15/12/2017	JOSE MANUEL			
Drew by	jcastano	Review	Date	Name	Review	Date	Name

3151_LSST

MCS Design Electrical Schematics

LSST TELESCOPE

Replaces | Replaced by

Terminal diagram
=E1+TMA-PI-CS-CBT-0101-X10

Customer: EMPRESARIOS AGRUPADOS
C/Magallanes, 3
28015 MADRID
91 3098000
http://www.empresariosagrupados.es/

= REPORT

+ TMA-PI-CS-CBT-0101

Terminal diagram

F13_001_TK_V2

Strip

=E1+TMA-PI-CS-CBT-0101-X12

4-20mA SENSORS

Function text				+TMA_E-335W4	+TMA_E-328W2	+TMA_E-328W1	+TMA_E-327W3	+TMA_E-327W2	Cable name	Target designation	Connection point	Terminal	Jumper	Wire	Target designation	Connection point	Cable name	-327W1	-327W2	-328W1	-328W2	Page / column
				LiCYC 2x0,34	LiCYC 2x0,34	LiCYC 2x0,34	LiCYC 2x0,34	LiCYC 2x0,34	Cable type								Cable type	SUPER-PAAR-TRONIC 340-C-PUR 1x2x0,34 mm²	SUPER-PAAR-TRONIC 340-C-PUR 1x2x0,34 mm²	SUPER-PAAR-TRONIC 340-C-PUR 1x2x0,34 mm²	SUPER-PAAR-TRONIC 340-C-PUR 1x2x0,34 mm²	
AZCW compressed air inlet pressure								WH		+TMA_E-327X2	1	1A		+V8	-X1	13						/327.1
=										-X1	18	1B			-220A30	1:30		BN				/327.1
=								BN		+TMA_E-327X2	3	1C			-220A30	1:20		WH				/327.2
AZCW service compressed air inlet temperature							WH			+TMA_E-327X3	1	2A										/327.4
=												2B			-220A30	1:31			BN			/327.5
=							BN			+TMA_E-327X3	3	2C			-220A30	1:21			WH			/327.5
SKF pressure inlet 1						WH				+TMA_E-328X1	1	3A										/328.1
=												3B			-220A30	2:32				BN		/328.1
=						BN				+TMA_E-328X1	3	3C			-220A30	2:22				WH		/328.2
SKF pressure inlet 2					WH					+TMA_E-328X2	1	4A										/328.4
=												4B			-220A30	2:33					BN	/328.5
=					BN					+TMA_E-328X2	3	4C			-220A30	2:23					WH	/328.5
AZCW cooling circuit inlet pressure				WH						+TMA_E-335X3	1	5A										/335.1

IK4-TEKNIKER
AVDA. OTAOLA 20
20600 Eibar (Gipuzkoa) Spain
Tfno.:(+34) 943 206744
Fax: (+34) 943 202757
Web: www.tekniker.es

Date	23/02/2017							
Reviewed	F.LÓPEZ	2.3	15/12/2017	JOSE MANUEL				
Drew by	jcastano	Review	Date	Name	Review	Date	Name	

3151_LSST

MCS Design Electrical Schematics

LSST TELESCOPE

Replaces

Replaced by

Terminal diagram
=E1+TMA-PI-CS-CBT-0101-X12

Customer: EMPRESARIOS AGRUPADOS
C/Magallanes, 3
28015 MADRID
91 3098000
http://www.empresariosagrupados.es/

= REPORT

+ TMA-PI-CS-CBT-0101

Terminal diagram

F13_001_TK_V2

Strip

=E1+TMA-PI-CS-CBT-0101-X12

4-20mA SENSORS

Function text				+TMA_E-351W1	+TMA_E-350W9	+TMA_E-350W8	+TMA_E-335W5	+TMA_E-335W4	Cable name	Target designation	Connection point	Terminal	Jumper	Wire	Target designation	Connection point	Cable name	-335W1	-335W2	-350W1	-350W2	Page / column
				LiCYC 2x0,34	LiCYC 2x0,34	LiCYC 2x0,34	LiCYC 2x0,34	LiCYC 2x0,34	Cable type								Cable type	SUPER-PAAR-TRONIC 340-C-PUR 1x2x0,34 mm²	SUPER-PAAR-TRONIC 340-C-PUR 1x2x0,34 mm²	SUPER-PAAR-TRONIC 340-C-PUR 1x2x0,34 mm²	SUPER-PAAR-TRONIC 340-C-PUR 1x2x0,34 mm²	
AZCW cooling circuit inlet pressure												5B			-220A30	3:34		BN				/335.1
=								BN		+TMA_E-335X3	2	5C			-220A30	3:24		WH				/335.1
AZCW cooling circuit outlet pressure							WH			+TMA_E-335X4	1	6A										/335.3
=												6B			-220A30	3:35			BN			/335.3
=							BN			+TMA_E-335X4	2	6C			-220A30	3:25			WH			/335.3
AZCW compressed air inlet temperature						WH				+TMA_E-350B8	+	7A										/350.1
=												7B			-220A31	2:32				BN		/350.1
=						BN				+TMA_E-350B8	-	7C			-220A31	2:22				WH		/350.1
AZCW service compressed air inlet temperature					WH					+TMA_E-350B9	+	8A										/350.4
=												8B			-220A31	2:33					BN	/350.4
=					BN					+TMA_E-350B9	-	8C			-220A31	2:23					WH	/350.5
SKF temperature inlet 1				WH						+TMA_E-351B1	+	9A										/351.1

IK4-TEKNIKER
AVDA. OTAOLA 20
20600 Eibar (Gipuzkoa) Spain
Tfno.:(+34) 943 206744
Fax: (+34) 943 202757
Web: www.tekniker.es

Date	23/02/2017							
Reviewed	F.LÓPEZ	2.3	15/12/2017	JOSE MANUEL				
Drew by	jcastano	Review	Date	Name	Review	Date	Name	

3151_LSST

MCS Design Electrical Schematics

LSST TELESCOPE

Replaces | Replaced by

Terminal diagram
=E1+TMA-PI-CS-CBT-0101-X12

Customer: EMPRESARIOS AGRUPADOS
C/Magallanes, 3
28015 MADRID
91 3098000
http://www.empresariosagrupados.es/

= REPORT

+ TMA-PI-CS-CBT-0101

Terminal diagram

F13_001_TK_V2

Strip

=E1+TMA-PI-CS-CBT-0101-X12

4-20mA SENSORS

Function text					+TMA_E-352W2	+TMA_E-352W1	+TMA_E-351W2	+TMA_E-351W1	Cable name	Target designation	Connection point	Terminal	Jumper	Wire	Target designation	Connection point	Cable name	-351W1	-351W2	-352W1	-352W2	Page / column
					LiCYC 2x0,34	LiCYC 2x0,34	LiCYC 2x0,34	LiCYC 2x0,34	Cable type								Cable type	SUPER-PAAR-TRONIC 340-C-PUR 1x2x0,34 mm²	SUPER-PAAR-TRONIC 340-C-PUR 1x2x0,34 mm²	SUPER-PAAR-TRONIC 340-C-PUR 1x2x0,34 mm²	SUPER-PAAR-TRONIC 340-C-PUR 1x2x0,34 mm²	
SKF temperature inlet 1												9B			-220A31	1:30		BN				/351.1
=								BN		+TMA_E-351B1	-	9C			-220A31	1:20		WH				/351.1
SKF temperature inlet 2							WH			+TMA_E-351B2	+	10A										/351.4
=												10B			-220A31	1:31			BN			/351.4
=							BN			+TMA_E-351B2	-	10C			-220A31	1:21			WH			/351.5
AZCW cooling circuit inlet temeperature						WH				+TMA_E-352B1	+	11A										/352.1
=												11B			-220A30	4:36				BN		/352.1
=						BN				+TMA_E-352B1	-	11C			-220A30	4:26				WH		/352.1
AZCW cooling circuit outlet temeperature					WH					+TMA_E-352B2	+	12A										/352.4
=												12B			-220A30	4:37					BN	/352.4
=					BN					+TMA_E-352B2	-	12C			-220A30	4:27					WH	/352.5

IK4-TEKNIKER
AVDA. OTAOLA 20
20600 Eibar (Gipuzkoa) Spain
Tfno.:(+34) 943 206744
Fax: (+34) 943 202757
Web: www.tekniker.es

Date	23/02/2017							
Reviewed	F.LÓPEZ	2.3	15/12/2017	JOSE MANUEL				
Drew by	jcastano	Review	Date	Name	Review	Date	Name	

3151_LSST

MCS Design Electrical Schematics

LSST TELESCOPE

Replaces | Replaced by

Terminal diagram
=E1+TMA-PI-CS-CBT-0101-X12

Customer: EMPRESARIOS AGRUPADOS
C/Magallanes, 3
28015 MADRID
91 3098000
http://www.empresariosagrupados.es/

= REPORT

+ TMA-PI-CS-CBT-0101

Terminal diagram

F13_001_TK_V2

Strip

=E1+TMA-PI-CS-CBT-0101-X13

ENCODER POWER

Cable name: +TMA_E-355W4

Cable type: ENCODER

Function text	Target designation	Connection point	Terminal	Jumper	Wire	Target designation	Connection point	Cable type					Page / column
Encoder Power	-500A1-X1	X1	1	.		+TMA_E-355B4			V+				/545.8
=	-500A1-X1	X1	2	.		+TMA_E-355B4			0V				/545.8
Encoder free signal			3	.		+TMA_E-355B4			TO				/545.9

IK4-TEKNIKER
AVDA. OTAOLA 20
20600 Eibar (Gipuzkoa) Spain
Tfno.:(+34) 943 206744
Fax: (+34) 943 202757
Web: www.tekniker.es

Date	23/02/2017							
Reviewed	F.LÓPEZ	2.3	15/12/2017	JOSE MANUEL				
Drew by	jcastano	Review	Date	Name	Review	Date	Name	

3151_LSST — MCS Design Electrical Schematics

LSST TELESCOPE

Replaces | Replaced by

Terminal diagram
=E1+TMA-PI-CS-CBT-0101-X13

Customer: EMPRESARIOS AGRUPADOS
C/Magallanes, 3
28015 MADRID
91 3098000
http://www.empresariosagrupados.es/

= REPORT
+ TMA-PI-CS-CBT-0101

Cable diagram

F09_001_TK1

Cable ID	Cable Type	no. of conductors	cross-section	cable length	function text
=E1+TMA-PI-CS-CBT-0101-235W1	SUPER-PAAR-TRONIC 6x2x0,5 mm²	12	0,5		MAIN PANEL VOLTAGE & CURRENT SIGNALS

function text	X-Ref	Connected to	Pin	conductor	Connected to	Pin	X-Ref
Main Panel signals	/353.2	-X10	23	**WH**	-220A32	1:00	/235.2
=	/353.2	-X10	24	**BN**	-220A32	1:10	/235.2
=	/353.3	-X10	25	**GN**	-220A32	1:01	/235.3
=	/353.3	-X10	26	**YE**	-220A32	1:11	/235.3
=	/353.4	-X10	27	**GY**	-220A32	2:02	/235.3
=	/353.4	-X10	28	**PK**	-220A32	2:12	/235.4
=	/353.5	-X10	29	**BU**	-220A32	2:03	/235.4
=	/353.6	-X10	30	**RD**	-220A32	2:13	/235.5
=	/353.6	-X10	31	**BK**	-220A32	3:04	/235.5
=	/353.7	-X10	32	**VT**	-220A32	3:14	/235.6
=	/353.8	-X10	33	**GYPK**	-220A32	3:05	/235.6
=	/353.8	-X10	34	**RDBU**	-220A32	3:15	/235.6
MAIN PANEL VOLTAGE & CURRENT SIGNALS	/235.2	-235W1		**SH**	-235W1-SH		/235.7

IK4 TEKNIKER Research Alliance

IK4-TEKNIKER
AVDA. OTAOLA 20
20600 Eibar (Gipuzkoa) Spain
Tfno.:(+34) 943 206744
Fax: (+34) 943 202757
Web: www.tekniker.es

Date	23/02/2017						
Reviewed	F.LÓPEZ	2.3	15/12/2017	JOSE MANUEL			
Drew by	jcastano	Review	Date	Name	Review	Date	Name

3151_LSST — MCS Design Electrical Schematics

LSST TELESCOPE

Replaces — Replaced by

Cable diagram
=E1+TMA-PI-CS-CBT-0101-235W1

Customer: EMPRESARIOS AGRUPADOS
C/Magallanes, 3
28015 MADRID
91 3098000
http://www.empresariosagrupados.es/

= REPORT
+ TMA-PI-CS-CBT-0101

Cable diagram

F09_001_TK1

Cable ID	Cable Type	no. of conductors	cross-section	cable length	function text
=E1+TMA-PI-CS-CBT-0101-325W1	4x0,25	2	0,25		AZCW pinion 1 Lubrication

function text	X-Ref	Connected to	Pin	conductor	Connected to	Pin	X-Ref
AZIMUTH CABLE WRAP PINION 1 LUBRICACION	/325.1	+TMA-PI-CS-CBT-0102-X1	2	**BK**	-325U1	BK	/325.1
=	/325.0	+TMA-PI-CS-CBT-0102-X1	1	**BN**	-325U1	BN	/325.0
=	/325.1	+TMA-PI-CS-CBT-0102-X1	4	**BU**	-325U1	BU	/325.1
=	/325.1	+TMA-PI-CS-CBT-0102-X1	3	**WH**	-325U1	WH	/325.1

IK4 TEKNIKER Research Alliance

IK4-TEKNIKER
AVDA. OTAOLA 20
20600 Eibar (Gipuzkoa) Spain
Tfno.:(+34) 943 206744
Fax: (+34) 943 202757
Web: www.tekniker.es

Date	23/02/2017						
Reviewed	F.LÓPEZ	2.3	15/12/2017	JOSE MANUEL			
Drew by	jcastano	Review	Date	Name	Review	Date	Name

3151_LSST

MCS Design Electrical Schematics

LSST TELESCOPE

Replaces

Replaced by

Cable diagram
=E1+TMA-PI-CS-CBT-0101-325W1

Customer:

EMPRESARIOS AGRUPADOS

EMPRESARIOS AGRUPADOS
C/Magallanes, 3
28015 MADRID
91 3098000

http://www.empresariosagrupados.es/

= REPORT

+ TMA-PI-CS-CBT-0101

Cable diagram

F09_001_TK1

Cable ID	Cable Type	no. of conductors	cross-section	cable length	function text
=E1+TMA-PI-CS-CBT-0101-325W2	3x0,14mm2	3	0,14		emptying monitor cable

function text	X-Ref	Connected to	Pin	conductor	Connected to	Pin	X-Ref
AZIMUTH CABLE WRAP PINION 1 LUBRICACION	/325.3	+TMA-PI-CS-CBT-0102-X1	7	**BK**	-325U1	BK	/325.3
=	/325.2	+TMA-PI-CS-CBT-0102-X1	5	**BN**	-325U1	BN	/325.2
=	/325.2	+TMA-PI-CS-CBT-0102-X1	6	**BU**	-325U1	BU	/325.2

IK4 TEKNIKER Research Alliance

IK4-TEKNIKER
AVDA. OTAOLA 20
20600 Eibar (Gipuzkoa) Spain
Tfno.:(+34) 943 206744
Fax: (+34) 943 202757
Web: www.tekniker.es

Date	23/02/2017						
Reviewed	F.LÓPEZ	2.3	15/12/2017	JOSE MANUEL			
Drew by	jcastano	Review	Date	Name	Review	Date	Name

3151_LSST

MCS Design Electrical Schematics

LSST TELESCOPE

Replaces

Replaced by

Cable diagram
=E1+TMA-PI-CS-CBT-0101-325W2

Customer:

EMPRESARIOS AGRUPADOS

EMPRESARIOS AGRUPADOS
C/Magallanes, 3
28015 MADRID
91 3098000

http://www.empresariosagrupados.es/

= REPORT

+ TMA-PI-CS-CBT-0101

Cable diagram

F09_001_TK1

Cable ID	Cable Type	no. of conductors	cross-section	cable length	function text
=E1+TMA-PI-CS-CBT-0101-325W3	JZ-602-CY 9G1,5	9	1,5		AZCW PINION 1 LUBRICATION

function text	X-Ref	Connected to	Pin	conductor	Connected to	Pin	X-Ref
AZIMUTH CABLE WRAP PINION 1 LUBRICACION	/325.0	-X10	7	**1**	+TMA-PI-CS-CBT-0102-X1	1	/325.0
=	/325.1	-X10	8	**2**	+TMA-PI-CS-CBT-0102-X1	2	/325.1
=	/325.1	-X10	9	**3**	+TMA-PI-CS-CBT-0102-X1	3	/325.1
=	/325.1	-X10	10	**4**	+TMA-PI-CS-CBT-0102-X1	4	/325.1
=	/325.2	-X10	11	**5**	+TMA-PI-CS-CBT-0102-X1	5	/325.2
=	/325.2	-X10	12	**6**	+TMA-PI-CS-CBT-0102-X1	6	/325.2
=	/325.3	-X10	13	**7**	+TMA-PI-CS-CBT-0102-X1	7	/325.3
				8			
	/325.3	-PE	12	**GNYE**	+TMA-PI-CS-CBT-0102-PE	1	/325.3
AZCW PINION 1 LUBRICATION	/325.0	-325W3		**SH**	-325W3-SH		/325.3

◁ 3003

3005 ▷

IK4 TEKNIKER Research Alliance
IK4-TEKNIKER
AVDA. OTAOLA 20
20600 Eibar (Gipuzkoa) Spain
Tfno.:(+34) 943 206744
Fax: (+34) 943 202757
Web: www.tekniker.es

Date	23/02/2017						
Reviewed	F.LÓPEZ	2.3	15/12/2017	JOSE MANUEL			
Drew by	jcastano	Review	Date	Name	Review	Date	Name

3151_LSST
MCS Design Electrical Schematics
LSST TELESCOPE

Replaces | Replaced by

Cable diagram
=E1+TMA-PI-CS-CBT-0101-325W3

Customer:
EMPRESARIOS AGRUPADOS
C/Magallanes, 3
28015 MADRID
91 3098000
http://www.empresariosagrupados.es/

= REPORT
+ TMA-PI-CS-CBT-0101

Cable diagram

F09_001_TK1

Cable ID	Cable Type	no. of conductors	cross-section	cable length	function text
=E1+TMA-PI-CS-CBT-0101-325W4	4x 0.25mm2	4	0,25		LUBRICATION BKI 101 e CABLE

function text	X-Ref	Connected to	Pin	conductor	Connected to	Pin	X-Ref
AZIMUTH CABLE WRAP PINION 2 LUBRICATION	/325.5	+TMA-PI-CS-CBT-0103-X1	2	**BK**	-325U2	BK	/325.5
=	/325.4	+TMA-PI-CS-CBT-0103-X1	1	**BN**	-325U2	BN	/325.4
=	/325.5	+TMA-PI-CS-CBT-0103-X1	4	**BU**	-325U2	BU	/325.5
=	/325.5	+TMA-PI-CS-CBT-0103-X1	3	**WH**	-325U2	WH	/325.5

Cable diagram

F09_001_TK1

Cable ID	Cable Type	no. of conductors	cross-section	cable length	function text
=E1+TMA-PI-CS-CBT-0101-325W5	3x0,14mm2	3	0,14		emptying monitor cable

function text	X-Ref	Connected to	Pin	conductor	Connected to	Pin	X-Ref
AZIMUTH CABLE WRAP PINION 2 LUBRICATION	/325.6	+TMA-PI-CS-CBT-0103-X1	7	**BK**	-325U2	BK	/325.6
=	/325.6	+TMA-PI-CS-CBT-0103-X1	5	**BN**	-325U2	BN	/325.6
=	/325.6	+TMA-PI-CS-CBT-0103-X1	6	**BU**	-325U2	BU	/325.6

IK4 TEKNIKER Research Alliance

IK4-TEKNIKER
AVDA. OTAOLA 20
20600 Eibar (Gipuzkoa) Spain
Tfno.:(+34) 943 206744
Fax: (+34) 943 202757
Web: www.tekniker.es

Date	23/02/2017						
Reviewed	F.LÓPEZ	2.3	15/12/2017	JOSE MANUEL			
Drew by	jcastano	Review	Date	Name	Review	Date	Name

3151_LSST — MCS Design Electrical Schematics

LSST TELESCOPE

Replaces — Replaced by

Cable diagram
=E1+TMA-PI-CS-CBT-0101-325W5

Customer: EMPRESARIOS AGRUPADOS
C/Magallanes, 3
28015 MADRID
91 3098000
http://www.empresariosagrupados.es/

= REPORT
+ TMA-PI-CS-CBT-0101

Cable diagram

F09_001_TK1

Cable ID	Cable Type	no. of conductors	cross-section	cable length	function text
=E1+TMA-PI-CS-CBT-0101-325W6	JZ-602-CY 9G1,5	9	1,5		AZCW PINION 2 LUBRICATION

function text	X-Ref	Connected to	Pin	conductor	Connected to	Pin	X-Ref
AZIMUTH CABLE WRAP PINION 2 LUBRICATION	/325.4	-X10	14	**1**	+TMA-PI-CS-CBT-0103-X1	1	/325.4
=	/325.5	-X10	15	**2**	+TMA-PI-CS-CBT-0103-X1	2	/325.5
=	/325.5	-X10	16	**3**	+TMA-PI-CS-CBT-0103-X1	3	/325.5
=	/325.5	-X10	17	**4**	+TMA-PI-CS-CBT-0103-X1	4	/325.5
=	/325.6	-X10	18	**5**	+TMA-PI-CS-CBT-0103-X1	5	/325.6
=	/325.6	-X10	19	**6**	+TMA-PI-CS-CBT-0103-X1	6	/325.6
=	/325.6	-X10	20	**7**	+TMA-PI-CS-CBT-0103-X1	7	/325.6
				8			
	/325.7	-PE	13	**GNYE**	+TMA-PI-CS-CBT-0103-PE	1	/325.7
AZCW PINION 2 LUBRICATION	/325.4	-325W6		**SH**	-325W6-SH		/325.7

◁ 3006

3008 ▷

IK4-TEKNIKER
AVDA. OTAOLA 20
20600 Eibar (Gipuzkoa) Spain
Tfno.:(+34) 943 206744
Fax: (+34) 943 202757
Web: www.tekniker.es

Date	23/02/2017						
Reviewed	F.LÓPEZ	2.3	15/12/2017	JOSE MANUEL			
Drew by	jcastano	Review	Date	Name	Review	Date	Name

3151_LSST — MCS Design Electrical Schematics
LSST TELESCOPE

Replaces | Replaced by

Cable diagram
=E1+TMA-PI-CS-CBT-0101-325W6

Customer: EMPRESARIOS AGRUPADOS
C/Magallanes, 3
28015 MADRID
91 3098000
http://www.empresariosagrupados.es/

= REPORT
+ TMA-PI-CS-CBT-0101

Cable diagram

F09_001_TK1

Cable ID	Cable Type	no. of conductors	cross-section	cable length	function text
=E1+TMA-PI-CS-CBT-0101-327W1	SUPER-PAAR-TRONIC 340-C-PUR 1x2x0,34 mm²	2	0,34		AZCW compressed air inlet pressure

function text	X-Ref	Connected to	Pin	conductor	Connected to	Pin	X-Ref
AZCW compressed air inlet pressure	/327.2	-X12	1C	**WH**	-220A30	1:20	/233.2
=	/327.1	-X12	1B	**BN**	-220A30	1:30	/233.2
=	/327.2	-327W1		**SH**	-327W1-SH		/233.2

IK4 TEKNIKER Research Alliance

IK4-TEKNIKER
AVDA. OTAOLA 20
20600 Eibar (Gipuzkoa) Spain
Tfno.:(+34) 943 206744
Fax: (+34) 943 202757
Web: www.tekniker.es

Date	23/02/2017						
Reviewed	F.LÓPEZ	2.3	15/12/2017	JOSE MANUEL			
Drew by	jcastano	Review	Date	Name	Review	Date	Name

3151_LSST

MCS Design Electrical Schematics

LSST TELESCOPE

Replaces

Replaced by

Cable diagram
=E1+TMA-PI-CS-CBT-0101-327W1

Customer:

EMPRESARIOS AGRUPADOS

EMPRESARIOS AGRUPADOS
C/Magallanes, 3
28015 MADRID
91 3098000

http://www.empresariosagrupados.es/

= REPORT

+ TMA-PI-CS-CBT-0101

Cable diagram

F09_001_TK1

Cable ID	Cable Type	no. of conductors	cross-section	cable length	function text
=E1+TMA-PI-CS-CBT-0101-327W2	SUPER-PAAR-TRONIC 340-C-PUR 1x2x0,34 mm²	2	0,34		AZCW service compressed air inlet temperature

function text	X-Ref	Connected to	Pin	conductor	Connected to	Pin	X-Ref
AZCW service compressed air inlet temperature	/327.5	-X12	2C	**WH**	-220A30	1:21	/233.3
=	/327.5	-X12	2B	**BN**	-220A30	1:31	/233.3
=	/327.5	-327W2		**SH**	-327W2-SH		/233.3

IK4 TEKNIKER Research Alliance

IK4-TEKNIKER
AVDA. OTAOLA 20
20600 Eibar (Gipuzkoa) Spain
Tfno.:(+34) 943 206744
Fax: (+34) 943 202757
Web: www.tekniker.es

Date	23/02/2017						
Reviewed	F.LÓPEZ	2.3	15/12/2017	JOSE MANUEL			
Drew by	jcastano	Review	Date	Name	Review	Date	Name

3151_LSST

MCS Design Electrical Schematics

LSST TELESCOPE

Replaces

Replaced by

Cable diagram
=E1+TMA-PI-CS-CBT-0101-327W2

Customer:

EMPRESARIOS AGRUPADOS

C/Magallanes, 3
28015 MADRID
91 3098000

http://www.empresariosagrupados.es/

= REPORT

+ TMA-PI-CS-CBT-0101

Cable diagram

F09_001_TK1

Cable ID	Cable Type	no. of conductors	cross-section	cable length	function text
=E1+TMA-PI-CS-CBT-0101-328W1	SUPER-PAAR-TRONIC 340-C-PUR 1x2x0,34 mm²	2	0,34		SKF pressure inlet 1

function text	X-Ref	Connected to	Pin	conductor	Connected to	Pin	X-Ref
SKF pressure inlet 1	/328.2	-X12	3C	**WH**	-220A30	2:22	/233.3
=	/328.1	-X12	3B	**BN**	-220A30	2:32	/233.4
=	/328.2	-328W1		**SH**	-328W1-SH		/233.4

◁ 3009

3011 ▷

IK4 TEKNIKER Research Alliance
IK4-TEKNIKER
AVDA. OTAOLA 20
20600 Eibar (Gipuzkoa) Spain
Tfno.:(+34) 943 206744
Fax: (+34) 943 202757
Web: www.tekniker.es

Date	23/02/2017						
Reviewed	F.LÓPEZ	2.3	15/12/2017	JOSE MANUEL			
Drew by	jcastano	Review	Date	Name	Review	Date	Name

3151_LSST
MCS Design Electrical Schematics
LSST TELESCOPE

Replaces | Replaced by

Cable diagram
=E1+TMA-PI-CS-CBT-0101-328W1

Customer:
EMPRESARIOS AGRUPADOS
C/Magallanes, 3
28015 MADRID
91 3098000
http://www.empresariosagrupados.es/

= REPORT
+ TMA-PI-CS-CBT-0101

Cable diagram

F09_001_TK1

Cable ID	Cable Type	no. of conductors	cross-section	cable length	function text
=E1+TMA-PI-CS-CBT-0101-328W2	SUPER-PAAR-TRONIC 340-C-PUR 1x2x0,34 mm²	2	0,34		SKF pressure inlet 2

function text	X-Ref	Connected to	Pin	conductor	Connected to	Pin	X-Ref
SKF pressure inlet 2	/328.5	-X12	4C	**WH**	-220A30	2:23	/233.4
=	/328.5	-X12	4B	**BN**	-220A30	2:33	/233.5
=	/328.5	-328W2		**SH**	-328W2-SH		/233.5

IK4 TEKNIKER Research Alliance

IK4-TEKNIKER
AVDA. OTAOLA 20
20600 Eibar (Gipuzkoa) Spain
Tfno.:(+34) 943 206744
Fax: (+34) 943 202757
Web: www.tekniker.es

Date	23/02/2017						
Reviewed	F.LÓPEZ	2.3	15/12/2017	JOSE MANUEL			
Drew by	jcastano	Review	Date	Name	Review	Date	Name

3151_LSST

MCS Design Electrical Schematics

LSST TELESCOPE

Replaces

Replaced by

Cable diagram
=E1+TMA-PI-CS-CBT-0101-328W2

Customer:

EMPRESARIOS AGRUPADOS

EMPRESARIOS AGRUPADOS
C/Magallanes, 3
28015 MADRID
91 3098000

http://www.empresariosagrupados.es/

= REPORT

+ TMA-PI-CS-CBT-0101

Cable diagram

F09_001_TK1

Cable ID	Cable Type	no. of conductors	cross-section	cable length	function text
=E1+TMA-PI-CS-CBT-0101-335W1	SUPER-PAAR-TRONIC 340-C-PUR 1x2x0,34 mm²	2	0,34		AZCW cooling circuit inlet pressure

function text	X-Ref	Connected to	Pin	conductor	Connected to	Pin	X-Ref
AZCW cooling circuit inlet pressure	/335.1	-X12	5C	**WH**	-220A30	3:24	/233.5
=	/335.1	-X12	5B	**BN**	-220A30	3:34	/233.5
=	/335.2	-335W1		**SH**	-335W1-SH		/233.6

IK4 TEKNIKER Research Alliance

IK4-TEKNIKER
AVDA. OTAOLA 20
20600 Eibar (Gipuzkoa) Spain
Tfno.:(+34) 943 206744
Fax: (+34) 943 202757
Web: www.tekniker.es

Date	23/02/2017						
Reviewed	F.LÓPEZ	2.3	15/12/2017	JOSE MANUEL			
Drew by	jcastano	Review	Date	Name	Review	Date	Name

3151_LSST

MCS Design Electrical Schematics

LSST TELESCOPE

Replaces

Replaced by

Cable diagram
=E1+TMA-PI-CS-CBT-0101-335W1

Customer:

EMPRESARIOS AGRUPADOS

EMPRESARIOS AGRUPADOS
C/Magallanes, 3
28015 MADRID
91 3098000

http://www.empresariosagrupados.es/

= REPORT

+ TMA-PI-CS-CBT-0101

Cable diagram

F09_001_TK1

Cable ID	Cable Type	no. of conductors	cross-section	cable length	function text
=E1+TMA-PI-CS-CBT-0101-335W2	SUPER-PAAR-TRONIC 340-C-PUR 1x2x0,34 mm²	2	0,34		AZCW cooling circuit outlet pressure

function text	X-Ref	Connected to	Pin	conductor	Connected to	Pin	X-Ref
AZCW cooling circuit outlet pressure	/335.3	-X12	6C	**WH**	-220A30	3:25	/233.6
=	/335.3	-X12	6B	**BN**	-220A30	3:35	/233.6
=	/335.4	-335W2		**SH**	-335W2-SH		/233.7

◁ 3012

3014 ▷

IK4-TEKNIKER
AVDA. OTAOLA 20
20600 Eibar (Gipuzkoa) Spain
Tfno.:(+34) 943 206744
Fax: (+34) 943 202757
Web: www.tekniker.es

Date	23/02/2017						
Reviewed	F.LÓPEZ	2.3	15/12/2017	JOSE MANUEL			
Drew by	jcastano	Review	Date	Name	Review	Date	Name

3151_LSST

MCS Design Electrical Schematics

LSST TELESCOPE

Replaces

Replaced by

Cable diagram
=E1+TMA-PI-CS-CBT-0101-335W2

Customer:
EMPRESARIOS AGRUPADOS
C/Magallanes, 3
28015 MADRID
91 3098000
http://www.empresariosagrupados.es/

= REPORT
+ TMA-PI-CS-CBT-0101

Cable diagram

F09_001_TK1

Cable ID	Cable Type	no. of conductors	cross-section	cable length	function text
=E1+TMA-PI-CS-CBT-0101-350W1	SUPER-PAAR-TRONIC 340-C-PUR 1x2x0,34 mm²	2	0,34		AZCW compressed air inlet temperature

function text	X-Ref	Connected to	Pin	conductor	Connected to	Pin	X-Ref
AZCW compressed air inlet temperature	/350.1	-X12	7C	**WH**	-220A31	2:22	/234.3
=	/350.1	-X12	7B	**BN**	-220A31	2:32	/234.4
=	/350.2	-350W1		**SH**	-350W1-SH		/234.4

IK4 TEKNIKER Research Alliance

IK4-TEKNIKER
AVDA. OTAOLA 20
20600 Eibar (Gipuzkoa) Spain
Tfno.:(+34) 943 206744
Fax: (+34) 943 202757
Web: www.tekniker.es

Date	23/02/2017						
Reviewed	F.LÓPEZ	2.3	15/12/2017	JOSE MANUEL			
Drew by	jcastano	Review	Date	Name	Review	Date	Name

3151_LSST

MCS Design Electrical Schematics

LSST TELESCOPE

Replaces

Replaced by

Cable diagram
=E1+TMA-PI-CS-CBT-0101-350W1

Customer:
EMPRESARIOS AGRUPADOS
C/Magallanes, 3
28015 MADRID
91 3098000
http://www.empresariosagrupados.es/

= REPORT

+ TMA-PI-CS-CBT-0101

Cable diagram

F09_001_TK1

Cable ID	Cable Type	no. of conductors	cross-section	cable length	function text
=E1+TMA-PI-CS-CBT-0101-350W2	SUPER-PAAR-TRONIC 340-C-PUR 1x2x0,34 mm²	2	0,34		AZCW service compressed air inlet temperature

function text	X-Ref	Connected to	Pin	conductor	Connected to	Pin	X-Ref
AZCW service compressed air inlet temperature	/350.5	-X12	8C	**WH**	-220A31	2:23	/234.4
=	/350.4	-X12	8B	**BN**	-220A31	2:33	/234.4
=	/350.5	-350W2		**SH**	-350W2-SH		/234.5

IK4 TEKNIKER Research Alliance

IK4-TEKNIKER
AVDA. OTAOLA 20
20600 Eibar (Gipuzkoa) Spain
Tfno.:(+34) 943 206744
Fax: (+34) 943 202757
Web: www.tekniker.es

Date	23/02/2017						
Reviewed	F.LÓPEZ	2.3	15/12/2017	JOSE MANUEL			
Drew by	jcastano	Review	Date	Name	Review	Date	Name

3151_LSST

MCS Design Electrical Schematics

LSST TELESCOPE

Replaces

Replaced by

Cable diagram
=E1+TMA-PI-CS-CBT-0101-350W2

Customer:

EMPRESARIOS AGRUPADOS

EMPRESARIOS AGRUPADOS
C/Magallanes, 3
28015 MADRID
91 3098000

http://www.empresariosagrupados.es/

= REPORT

+ TMA-PI-CS-CBT-0101

Cable diagram

F09_001_TK1

Cable ID	Cable Type	no. of conductors	cross-section	cable length	function text
=E1+TMA-PI-CS-CBT-0101-351W1	SUPER-PAAR-TRONIC 340-C-PUR 1x2x0,34 mm²	2	0,34		SKF temperature inlet 1

function text	X-Ref	Connected to	Pin	conductor	Connected to	Pin	X-Ref
SKF temperature inlet 1	/351.1	-X12	9C	**WH**	-220A31	1:20	/234.2
=	/351.1	-X12	9B	**BN**	-220A31	1:30	/234.2
=	/351.2	-351W1		**SH**	-351W1-SH		/234.2

IK4 TEKNIKER Research Alliance

IK4-TEKNIKER
AVDA. OTAOLA 20
20600 Eibar (Gipuzkoa) Spain
Tfno.:(+34) 943 206744
Fax: (+34) 943 202757
Web: www.tekniker.es

Date	23/02/2017						
Reviewed	F.LÓPEZ	2.3	15/12/2017	JOSE MANUEL			
Drew by	jcastano	Review	Date	Name	Review	Date	Name

3151_LSST

MCS Design Electrical Schematics

LSST TELESCOPE

Replaces

Replaced by

Cable diagram
=E1+TMA-PI-CS-CBT-0101-351W1

Customer:

EMPRESARIOS AGRUPADOS

EMPRESARIOS AGRUPADOS
C/Magallanes, 3
28015 MADRID
91 3098000

http://www.empresariosagrupados.es/

= REPORT

+ TMA-PI-CS-CBT-0101

Cable diagram

F09_001_TK1

Cable ID	Cable Type	no. of conductors	cross-section	cable length	function text
=E1+TMA-PI-CS-CBT-0101-351W2	SUPER-PAAR-TRONIC 340-C-PUR 1x2x0,34 mm²	2	0,34		SKF temperature inlet 2

function text	X-Ref	Connected to	Pin	conductor	Connected to	Pin	X-Ref
SKF temperature inlet 2	/351.5	-X12	10C	**WH**	-220A31	1:21	/234.2
=	/351.4	-X12	10B	**BN**	-220A31	1:31	/234.3
=	/351.5	-351W2		**SH**	-351W2-SH		/234.3

◁ 3016

3018 ▷

IK4-TEKNIKER
AVDA. OTAOLA 20
20600 Eibar (Gipuzkoa) Spain
Tfno.:(+34) 943 206744
Fax: (+34) 943 202757
Web: www.tekniker.es

Date	23/02/2017						
Reviewed	F.LÓPEZ	2.3	15/12/2017	JOSE MANUEL			
Drew by	jcastano	Review	Date	Name	Review	Date	Name

3151_LSST

MCS Design Electrical Schematics

LSST TELESCOPE

Replaces

Replaced by

Cable diagram
=E1+TMA-PI-CS-CBT-0101-351W2

Customer:

EMPRESARIOS AGRUPADOS
C/Magallanes, 3
28015 MADRID
91 3098000

http://www.empresariosagrupados.es/

= REPORT

+ TMA-PI-CS-CBT-0101

Cable diagram

F09_001_TK1

Cable ID	Cable Type	no. of conductors	cross-section	cable length	function text
=E1+TMA-PI-CS-CBT-0101-352W1	SUPER-PAAR-TRONIC 340-C-PUR 1x2x0,34 mm²	2	0,34		AZCW cooling circuit inlet temeperature

function text	X-Ref	Connected to	Pin	conductor	Connected to	Pin	X-Ref
AZCW cooling circuit inlet temeperature	/352.1	-X12	11C	**WH**	-220A30	4:26	/233.7
=	/352.1	-X12	11B	**BN**	-220A30	4:36	/233.7
=	/352.2	-352W1		**SH**	-352W1-SH		/233.7

IK4 TEKNIKER Research Alliance

IK4-TEKNIKER
AVDA. OTAOLA 20
20600 Eibar (Gipuzkoa) Spain
Tfno.:(+34) 943 206744
Fax: (+34) 943 202757
Web: www.tekniker.es

Date	23/02/2017						
Reviewed	F.LÓPEZ	2.3	15/12/2017	JOSE MANUEL			
Drew by	jcastano	Review	Date	Name	Review	Date	Name

3151_LSST

MCS Design Electrical Schematics

LSST TELESCOPE

Replaces

Replaced by

Cable diagram
=E1+TMA-PI-CS-CBT-0101-352W1

Customer:

EMPRESARIOS AGRUPADOS

EMPRESARIOS AGRUPADOS
C/Magallanes, 3
28015 MADRID
91 3098000

http://www.empresariosagrupados.es/

= REPORT

+ TMA-PI-CS-CBT-0101

Cable diagram

F09_001_TK1

Cable ID	Cable Type	no. of conductors	cross-section	cable length	function text
=E1+TMA-PI-CS-CBT-0101-352W2	SUPER-PAAR-TRONIC 340-C-PUR 1x2x0,34 mm²	2	0,34		AZCW cooling circuit outlet temeperature

function text	X-Ref	Connected to	Pin	conductor	Connected to	Pin	X-Ref
AZCW cooling circuit outlet temeperature	/352.5	-X12	12C	**WH**	-220A30	4:27	/233.8
=	/352.4	-X12	12B	**BN**	-220A30	4:37	/233.8
=	/352.5	-352W2		**SH**	-352W2-SH		/233.8

◁ 3018

3020 ▷

IK4-TEKNIKER
AVDA. OTAOLA 20
20600 Eibar (Gipuzkoa) Spain
Tfno.:(+34) 943 206744
Fax: (+34) 943 202757
Web: www.tekniker.es

Date	23/02/2017						
Reviewed	F.LÓPEZ	2.3	15/12/2017	JOSE MANUEL			
Drew by	jcastano	Review	Date	Name	Review	Date	Name

3151_LSST

MCS Design Electrical Schematics

LSST TELESCOPE

Replaces

Replaced by

Cable diagram
=E1+TMA-PI-CS-CBT-0101-352W2

Customer:
EMPRESARIOS AGRUPADOS
C/Magallanes, 3
28015 MADRID
91 3098000
http://www.empresariosagrupados.es/

= REPORT
+ TMA-PI-CS-CBT-0101

Cable diagram

F09_001_TK1

Cable ID	Cable Type	no. of conductors	cross-section	cable length	function text
=E1+TMA-PI-CS-CBT-0101-501W1	YE ETH CAT6	5	1	1,5	ETHERNET IS YELOW

function text	X-Ref	Connected to	Pin	conductor	Connected to	Pin	X-Ref
	/501.0	-500A1	-X3	**ETH**	-501A1-P8	PORT1	/501.7

◁ 3019

+TMA-CCWAUX-CS-CBT-0101/001 ▷

IK4-TEKNIKER
AVDA. OTAOLA 20
20600 Eibar (Gipuzkoa) Spain
Tfno.:(+34) 943 206744
Fax: (+34) 943 202757
Web: www.tekniker.es

Date	23/02/2017						
Reviewed	F.LÓPEZ	2.3	15/12/2017	JOSE MANUEL			
Drew by	jcastano	Review	Date	Name	Review	Date	Name

3151_LSST

MCS Design Electrical Schematics

LSST TELESCOPE

Replaces

Replaced by

Cable diagram
=E1+TMA-PI-CS-CBT-0101-501W1

Customer:

EMPRESARIOS AGRUPADOS
C/Magallanes, 3
28015 MADRID
91 3098000

http://www.empresariosagrupados.es/

= REPORT

+ TMA-PI-CS-CBT-0101

Customer

EMPRESARIOS AGRUPADOS

EMPRESARIOS AGRUPADOS

C/Magallanes, 3
28015 MADRID
ESPAÑA
91 3098000

http://www.empresariosagrupados.es/

Project:

3151_LSST
MCS Design Electrical Schematics
LSST TELESCOPE

REPORT
GENERAL REPORT

TMA-CCWAUX-CS-CBT-0101
CCW AUXILIAR PORTABLE CABINET

Number of pages: 710

Made by:

IK4 TEKNIKER Research Alliance

IK4-TEKNIKER

AVDA. OTAOLA 20
20600 Eibar (Gipuzkoa) Spain
Tfno. : (+34) 943 206744
Fax : (+34) 943 202757
Web: www.tekniker.es

2.3	VERSION INTERMEDIA PARA MONTAJE ASTURFEITO (SIN EVALUACIONES)	15/12/2017	JOSE MANUEL
Review	Review description	Date	Reviewed

Drew by:	J.M.CASTAÑO
Reviewed:	F.LÓPEZ
Date:	16/12/2015
Replaces:	
Replaced by:	

Parts list

TEKNIKER_v2

DEVICE TAG	PLACEMENT	DESCRIPTION	REFERENCE	MANUFACTURER
=E1-206A1	=E1/206.0	SWITCH ETHERNET	IE-3000-8TC	CISCO
=E1-209A1	=E1/209.1	IndraControl L45.1 / sercos + Profibus DP + RT-Ethernet	R911170828	BOSCH REXROTH
=E1-210A1	=E1/210.2	Controller With 1.33 GHz Dual-Core CPU and 70T FPGA	NI 9030 783450-01	NATIONAL INSTRUMENTS
=E1-210A2	=E1/210.4	Entradas RTD	NI 9217 779592-01	NATIONAL INSTRUMENTS
=E1-210A3	=E1/210.5	32 channels: 16 digital input and 16 digital output	NI 9375 781030-01	NATIONAL INSTRUMENTS
=E1-500A1	=E1/500.2	PNOZmulti Base unit coated version	773105	PILZ
=E1-235B1	=E1/235.1	3 WIRE PT100 environment for indoor use	515-620	TC-DIRECT
=E1-021E1	=E1/101.4	RTT Enclosure heater 250 W, 230 V AC	3105380	RITTAL
=E1-002F1	=E1/002.0	MCCB_IEC_FS100_25A_3P_55KA_ETU3_LI	3VA2025-5HL32-0AA0	SIEMENS
=E1-002F1	=E1/002.0	SIDE WALL MOUNTED ROTARY OPERATOR, STD	3VA9267-0PK11	SIEMENS
=E1-002F2	=E1/002.4	Automatico tripolar C 16A	A9F79316	SCHNEIDER ELECTRIC
=E1-020F1	=E1/020.2	Miniature Circuit Breaker C 10A	A9F79310	SCHNEIDER ELECTRIC
=E1-021F1	=E1/101.4	Miniature Circuit Breaker C 1A	A9F74101	SCHNEIDER ELECTRIC
=E1-021F2	=E1/101.4	Miniature circuit breaker iC60N, 1P, 2A, C	A9F74102	SCHNEIDER ELECTRIC
=E1-020G1	=E1/020.2	Power supply unit	2866792	PHOENIX CONTACT
=E1-230K1	=E1/230.1	Zócalo de relé RIF-1	2900931	PHOENIX CONTACT
=E1-230K1	=E1/230.1	Single relay	2961312	PHOENIX CONTACT
=E1-230K1	=E1/230.1	Plug-in module	2900942	PHOENIX CONTACT
=E1-230K2	=E1/230.2	Zócalo de relé RIF-1	2900931	PHOENIX CONTACT
=E1-230K2	=E1/230.2	Single relay	2961312	PHOENIX CONTACT
=E1-230K2	=E1/230.2	Plug-in module	2900942	PHOENIX CONTACT
=E1-230K3	=E1/230.4	RIF-0 Base módule	2900958	PHOENIX CONTACT
=E1-230K3	=E1/230.4	Single relay	2961105	PHOENIX CONTACT
=E1-230K4	=E1/230.5	RIF-0 Base módule	2900958	PHOENIX CONTACT
=E1-230K4	=E1/230.5	Single relay	2961105	PHOENIX CONTACT
=E1-230K5	=E1/230.6	RIF-0 Base módule	2900958	PHOENIX CONTACT
=E1-230K5	=E1/230.6	Single relay	2961105	PHOENIX CONTACT
=E1-230K6	=E1/230.7	Zócalo de relé RIF-1	2900931	PHOENIX CONTACT
=E1-230K6	=E1/230.7	Single relay	2961312	PHOENIX CONTACT
=E1-230K6	=E1/230.7	Plug-in module	2900942	PHOENIX CONTACT
=E1-231K1	=E1/231.2	RIF-0 Base módule	2900958	PHOENIX CONTACT
=E1-231K1	=E1/231.2	Single relay	2961105	PHOENIX CONTACT
=E1-231K2	=E1/231.3	RIF-0 Base módule	2900958	PHOENIX CONTACT
=E1-231K2	=E1/231.3	Single relay	2961105	PHOENIX CONTACT
=E1-520K1	=E1/520.1	Contactores TeSys	CAD32BD	SCHNEIDER ELECTRIC
=E1-520K2	=E1/520.2	Contactores TeSys	CAD32BD	SCHNEIDER ELECTRIC
=E1-601K1	=E1/601.3	Contactores TeSys	LC1D18BD	SCHNEIDER ELECTRIC
=E1-002LC1	=E1/002.4	Choke	R911306580	BOSCH REXROTH
=E1-002LF1	=E1/002.4	Power Line Filter	R911337619	BOSCH REXROTH

Parts list

TEKNIKER_v2

DEVICE TAG	PLACEMENT	DESCRIPTION	REFERENCE	MANUFACTURER
=E1-108M2	=E1/108.4	Synchronous Servo Motor IndraDyn S	R911312321 MKS070C-0300-NN-M2-UG1-RNNN	BOSCH REXROTH
=E1-109M2	=E1/109.4	Synchronous Servo Motor IndraDyn S	R911312321 MKS070C-0300-NN-M2-UG1-RNNN	BOSCH REXROTH
=E1-PE	=E1/002.6	earth busbar	550220 TCB 20x5	ERICO
=E1-510S1	=E1/510.1	Complete device, round, mushroom pushbutton	XB4-BS8444	SCHNEIDER ELECTRIC
=E1-021T1	=E1/101.4	Transformer	0 427 85	LEGRAND
=E1-U1	=E1 (EC13.S23)	Mounting rail EN 50 022 (35x15)	TS 35_15	...
=E1-U2	=E1 (EC13.S23)	Mounting rail EN 50 022 (35x15)	TS 35_15	...
=E1-U3	=E1 (EC13.S23)	Mounting rail EN 50 022 (35x15)	TS 35_15	...
=E1-U4	=E1 (EC13.S23)	Mounting rail EN 50 022 (35x15)	TS 35_15	...
=E1-U5	=E1 (EC13.S23)	Mounting rail EN 50 022 (35x15)	TS 35_15	...
=E1-U12	=E1 (EC13.S23)	TS Bayed enclosure system, WHD: 800x1200x500 mm, Sheet steel	8815500	RIT
=E1-U100	=E1 (EC13.S23)	Unex slotted trunking 80x43 in U23X	80.40.77	UNEX
=E1-U101	=E1 (EC13.S23)	Unex slotted trunking 80x43 in U23X	80.40.77	UNEX
=E1-U102	=E1 (EC13.S23)	Unex slotted trunking 80x43 in U23X	80.40.77	UNEX
=E1-U103	=E1 (EC13.S23)	Unex slotted trunking 80x43 in U23X	80.40.77	UNEX
=E1-U104	=E1 (EC13.S23)	Unex slotted trunking 80x43 in U23X	80.40.77	UNEX
=E1-U105	=E1 (EC13.S23)	Unex slotted trunking 80x43 in U23X	80.40.77	UNEX
=E1-020U1	=E1/020.6	DC/DC CONVERTER	DDC1524S03 FARNELL: 2475871	XPPOWER
=E1-105U1	=E1/105.1	IndraDrive Power Supply	R911296724	BOSCH REXROTH
=E1-105U2	=E1/105.2	Inverter HMD01.1	R911306439	BOSCH REXROTH
=E1-105U2-A1	=E1/114.0	CDB control unit	R911338665 CDB02.1B-ET-EC-EC-NN-L3-L3-NN-NN-FW	BOSCH REXROTH
=E1-255U1	=E1/255.2	MOBILE OPERATING PANEL	KeTopT200	KEBA
=E1-255U2	=E1/255.1	Connection Box	JB002	KEBA
=E1-325U1	=E1/325.0	LUBRICATION SYSTEM	BKI 101 e	ATLANTA
=E1-325U2	=E1/325.4	LUBRICATION SYSTEM	BKI 101 e	ATLANTA
=E1-701U1	=E1/701.0	Modlink MSDD data connector insert	4000-68000-1200000	MURRELEKTRONIK
=E1-106W1	=E1/106.7	150mm BUSBAR	R911306629 HAS01.1-150-NNN-MN	BOSCH REXROTH
=E1-108W1	=E1/108.6	Motor Cable,	INK0653	BOSCH REXROTH
=E1-108W2	=E1/108.6	Motor Cable,	INK0653	BOSCH REXROTH
=E1-108W3	=E1/108.5	Encoder Cable	INK0448	BOSCH REXROTH
=E1-108W4	=E1/108.5	Motor Cable,	INK0653	BOSCH REXROTH
=E1-108W5	=E1/108.7	CABLE	C6PC70S-BL-03	BLACK BOX
=E1-109W1	=E1/109.5	Motor Cable,	INK0653	BOSCH REXROTH
=E1-109W2	=E1/109.5	Motor Cable,	INK0653	BOSCH REXROTH
=E1-109W3	=E1/109.4	Encoder Cable	INK0448	BOSCH REXROTH
=E1-109W4	=E1/109.4	Encoder Cable	INK0448	BOSCH REXROTH
=E1-206W1	=E1/206.2	CABLE	C6PC70S-BL-10	BLACK BOX
=E1-206W2	=E1/206.5	CABLE	C6PC70S-BL-07	BLACK BOX
=E1-206W3	=E1/206.6	CABLE	C6PC70S-BL-07	BLACK BOX

IK4 TEKNIKER Research Alliance
IK4-TEKNIKER
AVDA. OTAOLA 20
20600 Eibar (Gipuzkoa) Spain
Tfno.:(+34) 943 206744
Fax: (+34) 943 202757
Web: www.tekniker.es

Date	23/01/2017						
Reviewed	F.LÓPEZ	2.3	15/12/2017	JOSE MANUEL			
Drew by	jcastano	Review	Date	Name	Review	Date	Name

3151_LSST
MCS Design Electrical Schematics
LSST TELESCOPE
Replaces
Replaced by

Parts list :
BOS.MKS070C-0300-NN-M2-UG1-RNNN - BLB.C6PC70S-BL-07

Customer:
EMPRESARIOS AGRUPADOS
C/Magallanes, 3
28015 MADRID
91 3098000
http://www.empresariosagrupados.es/

= REPORT
+ TMA-CCWAUX-CS-CBT-0101

Parts list

TEKNIKER_v2

DEVICE TAG	PLACEMENT	DESCRIPTION	REFERENCE	MANUFACTURER
=E1-209W1	=E1/209.1	CABLE	C6PC70S-BL-03	BLACK BOX
=E1-209W2	=E1/209.6	CABLE	C6PC70S-BL-10	BLACK BOX
=E1-320W1	=E1/320.1	UL/CSA Control Cable JZ-602-CY 3G1 mm² GY	82980	HELUKABEL
=E1-320W2	=E1/320.3	UL/CSA Control Cable JZ-602-CY 3G1 mm² GY	82980	HELUKABEL
=E1-320W3	=E1/320.5	UL/CSA Control Cable JZ-602-CY 3G1 mm² GY	82980	HELUKABEL
=E1-320W4	=E1/320.7	UL/CSA Control Cable JZ-602-CY 3G1 mm² GY	82980	HELUKABEL
=E1-320W5A	=E1/320.1	UL/CSA Control Cable JZ-602-CY 18G1,5 mm² GY	82975	HELUKABEL
=E1-320W7	=E1/320.1	UL/CSA Control Cable JZ-602-CY 18G1,5 mm² GY	82975	HELUKABEL
=E1-X1 1	=E1/002.0	Feed-through terminal block	3211757	PHOENIX CONTACT
=E1-X1 1	=E1/002.0	Plug-in bridge	3030242	PHOENIX CONTACT
=E1-X1 2	=E1/020.4	Feed-through terminal block	3211757	PHOENIX CONTACT
=E1-X1 3	=E1/101.5	Feed-through terminal block	3211757	PHOENIX CONTACT
=E1-X1 3	=E1/101.5	Plug-in bridge	3030336	PHOENIX CONTACT
=E1-X1 4	=E1/002.0	Feed-through terminal block	3211757	PHOENIX CONTACT
=E1-X1 5	=E1/020.4	Feed-through terminal block	3211757	PHOENIX CONTACT
=E1-X1 6	=E1/101.5	Feed-through terminal block	3211757	PHOENIX CONTACT
=E1-X1 6	=E1/101.5	Plug-in bridge	3030336	PHOENIX CONTACT
=E1-X1 7	=E1/002.1	Feed-through terminal block	3211757	PHOENIX CONTACT
=E1-X1 8	=E1/020.4	Feed-through terminal block	3211757	PHOENIX CONTACT
=E1-X1 9	=E1/101.5	Feed-through terminal block	3211757	PHOENIX CONTACT
=E1-X1 9	=E1/101.5	Plug-in bridge	3030336	PHOENIX CONTACT
=E1-X1 10	=E1/020.2	Feed-through terminal block "Push-in" PT 2,5	3209510	PHOENIX CONTACT
=E1-X1 10	=E1/020.2	2,5/4-1,5/S reduction busbar	3214356	PHOENIX CONTACT
=E1-X1 11	=E1/020.2	Feed-through terminal block "Push-in" PT 2,5	3209510	PHOENIX CONTACT
=E1-X1 12	=E1/109.7	Feed-through terminal block PT 1,5/S	3208100	PHOENIX CONTACT
=E1-X1 12	=E1/109.7	10 PT1,5 busbar	3213056	PHOENIX CONTACT
=E1-X1 13	=E1/211.1	Feed-through terminal block PT 1,5/S	3208100	PHOENIX CONTACT
=E1-X1 14	=E1/220.3	Feed-through terminal block PT 1,5/S	3208100	PHOENIX CONTACT
=E1-X1 15	=E1/320.2	Feed-through terminal block PT 1,5/S	3208100	PHOENIX CONTACT
=E1-X1 16	=E1/500.6	Feed-through terminal block PT 1,5/S	3208100	PHOENIX CONTACT
=E1-X1 17	=E1/511.1	Feed-through terminal block PT 1,5/S	3208100	PHOENIX CONTACT
=E1-X1 18	=E1/601.4	Feed-through terminal block PT 1,5/S	3208100	PHOENIX CONTACT
=E1-X1 19	=E1/601.4	Feed-through terminal block PT 1,5/S	3208100	PHOENIX CONTACT
=E1-X1 20	=E1/601.5	Feed-through terminal block PT 1,5/S	3208100	PHOENIX CONTACT
=E1-X1 21	=E1/601.5	Feed-through terminal block PT 1,5/S	3208100	PHOENIX CONTACT
=E1-X1 22	=E1/020.3	Feed-through terminal block "Push-in" PT 2,5	3209510	PHOENIX CONTACT
=E1-X1 23	=E1/020.3	Feed-through terminal block "Push-in" PT 2,5	3209510	PHOENIX CONTACT
=E1-X1 24	=E1/109.7	Feed-through terminal block PT 1,5/S	3208100	PHOENIX CONTACT
=E1-X1 24	=E1/109.7	10 PT1,5 busbar	3213056	PHOENIX CONTACT

IK4 TEKNIKER Research Alliance

IK4-TEKNIKER
AVDA. OTAOLA 20
20600 Eibar (Gipuzkoa) Spain
Tfno.:(+34) 943 206744
Fax: (+34) 943 202757
Web: www.tekniker.es

Date	23/01/2017						
Reviewed	F.LÓPEZ	2.3	15/12/2017	JOSE MANUEL			
Drew by	jcastano	Review	Date	Name	Review	Date	Name

3151_LSST

MCS Design Electrical Schematics

LSST TELESCOPE

Replaces | Replaced by

Parts list : BLB.C6PC70S-BL-03 - PXC.3213056

Customer: EMPRESARIOS AGRUPADOS
C/Magallanes, 3
28015 MADRID
91 3098000
http://www.empresariosagrupados.es/

= REPORT
+ TMA-CCWAUX-CS-CBT-0101

Parts list

TEKNIKER_v2

DEVICE TAG		PLACEMENT	DESCRIPTION	REFERENCE	MANUFACTURER
=E1-X1	25	=E1/211.1	Feed-through terminal block PT 1,5/S	3208100	PHOENIX CONTACT
=E1-X1	26	=E1/255.2	Feed-through terminal block PT 1,5/S	3208100	PHOENIX CONTACT
=E1-X1	27	=E1/500.6	Feed-through terminal block PT 1,5/S	3208100	PHOENIX CONTACT
=E1-X1	28	=E1/520.4	Feed-through terminal block PT 1,5/S	3208100	PHOENIX CONTACT
=E1-X1	29	=E1/601.3	Feed-through terminal block PT 1,5/S	3208100	PHOENIX CONTACT
=E1-X1	30	=E1/601.4	Feed-through terminal block PT 1,5/S	3208100	PHOENIX CONTACT
=E1-X1	31	=E1/601.5	Feed-through terminal block PT 1,5/S	3208100	PHOENIX CONTACT
=E1-X1	32	=E1/601.5	Feed-through terminal block PT 1,5/S	3208100	PHOENIX CONTACT
=E1-X1	33	=E1/020.7	Feed-through terminal block "Push-in" PT 2,5	3209510	PHOENIX CONTACT
=E1-X1	33	=E1/020.7	2,5/4-1,5/S reduction busbar	3214356	PHOENIX CONTACT
=E1-X1	34	=E1/107.5	Feed-through terminal block PT 1,5/S	3208100	PHOENIX CONTACT
=E1-X1	35	=E1/209.2	Feed-through terminal block PT 1,5/S	3208100	PHOENIX CONTACT
=E1-X1	36	=E1/020.7	Feed-through terminal block PT 1,5/S	3208100	PHOENIX CONTACT
=E1-X1	36	=E1/020.7	2 PT 1,5 busbar	FBS 2-3,5 3213014	PHOENIX CONTACT
=E1-X1	37	=E1/020.7	Feed-through terminal block "Push-in" PT 2,5	3209510	PHOENIX CONTACT
=E1-X1	37	=E1/020.7	2,5/4-1,5/S reduction busbar	3214356	PHOENIX CONTACT
=E1-X1	38	=E1/107.5	Feed-through terminal block PT 1,5/S	3208100	PHOENIX CONTACT
=E1-X1	39	=E1/020.7	Feed-through terminal block PT 1,5/S	3208100	PHOENIX CONTACT
=E1-X1	39	=E1/020.7	2 PT 1,5 busbar	FBS 2-3,5 3213014	PHOENIX CONTACT
=E1-X11	1	=E1/108.8	Feed-through terminal block PT 1,5/S	3208100	PHOENIX CONTACT
=E1-X11	2	=E1/108.8	Feed-through terminal block PT 1,5/S	3208100	PHOENIX CONTACT
=E1-X11	3	=E1/109.7	Feed-through terminal block PT 1,5/S	3208100	PHOENIX CONTACT
=E1-X11	4	=E1/109.7	Feed-through terminal block PT 1,5/S	3208100	PHOENIX CONTACT
=E1-X30	1	=E1/002.1	Ground modular terminal block	3211766	PXC
=E1-X30	1	=E1/002.1	End cover	3030420	PHOENIX CONTACT
=E1-108X1		=E1/108.0	Bulkhead connector	B DF A 108 FR 05 00 0050 000	INTERCONTEC
=E1-108X2		=E1/108.0	Extension, 3+pe+4	INT.B KU A 199 MR 24 42 0100 000	INTERCONTEC
=E1-108X3		=E1/108.0	Conector panel 12 pines hembra "E" Type CODE 0	A DF A 013 FR 01 00 0101 000	INTERCONTEC
=E1-108X4		=E1/108.0	Extension	A KU A 012 MR 04 41 0100 000	INTERCONTEC
=E1-109X1		=E1/109.0	Bulkhead connector	B DF A 202 FR06 00 0050 000	INTERCONTEC
=E1-109X2		=E1/109.0	Conector aereo 3+PE+5B pines macho	B KU A 201 MR 09 42 0100 000	INTERCONTEC
=E1-109X3		=E1/109.0	Conector panel 12 pines hembra "E" Type	INT.A DF A 021 FR 01 00 0101 000	INTERCONTEC
=E1-109X4		=E1/109.0	Conector aereo 12 pines macho "P" Type	A KU A 020 MR 04 41 0100 000	INTERCONTEC
=E1-320X1F		=E1/320.0	Extension, central mount 16 Pin socket "E" Type	A KU A 164 FS 04 73 0113 000	INTERCONTEC
=E1-320X1M		=E1/320.0	16 PIN PLUG CONNECTOR "P" TYPE	A ST A 163 MS 06 73 0100 000	INTERCONTEC
=E1-320X2F		=E1/320.0	Conector 25 pines hembra	09 21 025 3101	HARTING
=E1-320X2M		=E1/320.0	Conector 25 pines macho	09 21 025 3001	HARTING
=E1-701X1F		=E1/701.3	Base para panel 8 +1 pines hembra "E" Type	A EG A 072 FS 01 00 0201 000	INTERCONTEC
=E1-701X1M		=E1/701.3	Conector aereo 8 +1 pines macho "P" Type	A ST A 070 MS 19 39 0035 000	INTERCONTEC

IK4 TEKNIKER Research Alliance
IK4-TEKNIKER
AVDA. OTAOLA 20
20600 Eibar (Gipuzkoa) Spain
Tfno.:(+34) 943 206744
Fax: (+34) 943 202757
Web: www.tekniker.es

Date	23/01/2017						
Reviewed	F.LÓPEZ	2.3	15/12/2017	JOSE MANUEL			
Drew by	jcastano	Review	Date	Name	Review	Date	Name

3151_LSST — MCS Design Electrical Schematics
LSST TELESCOPE
Replaces — Replaced by

Parts list : PXC.3208100 - INT.A ST A 070 MS 19 39 0035 000

Customer: EMPRESARIOS AGRUPADOS
C/Magallanes, 3
28015 MADRID
91 3098000
http://www.empresariosagrupados.es/

= REPORT
+ TMA-CCWAUX-CS-CBT-0101

Terminal diagram

F13_001_TK_V2

Strip

=E1+TMA-CCWAUX-CS-CBT-0101-X1

distribution terminal block

Function text	Cable name / Cable type	Target designation	Connection point	Terminal	Jumper	Wire	Target designation	Connection point	Cable name / Cable type	Page / column
		-601K1	1/L1	1		L1.1	-002F1	2		/002.0
24VDC		-021F1	1	2		L1.1	-020F1	1		/020.4
400V 50Hz Drivers				3						/101.5
400V 50Hz Pmax:44Kw		-601K1	3/L2	4		L2.1	-002F1	4		/002.0
24VDC				5		L2.1	-020F1	3		/020.4
400V 50Hz Drivers				6						/101.5
400V 50Hz Pmax:44Kw		-601K1	5/L3	7		L3.1	-002F1	6		/002.1
24VDC		-021T1	V1	8		L3.1	-020F1	5		/020.4
400V 50Hz Drivers				9						/101.5
24 VDC PIER		-105U2-X49.1	X49.1:4	10		+V1	+V1			/020.2
=		-601K1	13	11		+V1	+V1			/020.2
24VDC		-206A1-PWR1	1	12		+V1	-105U2	X49.2:4		/109.7
24VDC		-206A1-PWR1	3	13		+V1	-210A1	POWER:V1		/211.1
=		-255U2-X1	1	14		+V1	-255U2-X2	3		/220.3
		-105U1	X33:2							
24VDC		-500A1	X2:6	15		+V1	-320X2F	A1		/320.2
							-105U2-X33	X33:2.1		
24VDC				16		+V1	-500A1	X7:1		/500.6
=		-230K1	11	17		+V1	-520K1	21		/511.1
=				18						/601.4
=				19						/601.4
=				20						/601.5
=				21						/601.5
24 VDC PIER		-105U2-X49.1	X49.1:2	22		0V1	0V1			/020.3
=				23		0V1	0V1			/020.3
24VDC		-206A1-PWR1	2	24		0V1	-105U2	X49.2:2		/109.7
24VDC		-230K1	A2	25		0V1	-210A1	POWER:C		/211.1
=		-320X2F	A2	26		0V1	-255U2-X1	2		/255.2
=		-500A1	X7:3	27		0V1	-500A1	X2:8		/500.6
=		-X11	2	28		0V1	-520K1	A2		/520.4
=		-601K1	A2	29		0V1	-X11	4		/601.3
=				30						/601.4
=				31						/601.5
=				32						/601.5
24VDC CONTROL EL1		-105U1	XCV:24V	33		+V1t	-601K1	14		/020.7

IK4-TEKNIKER
AVDA. OTAOLA 20
20600 Eibar (Gipuzkoa) Spain
Tfno.:(+34) 943 206744
Fax: (+34) 943 202757
Web: www.tekniker.es

Date	23/01/2017						
Reviewed	F.LÓPEZ	2.3	15/12/2017	JOSE MANUEL			
Drew by	jcastano	Review	Date	Name	Review	Date	Name

3151_LSST

MCS Design Electrical Schematics

LSST TELESCOPE

Replaces | Replaced by

Terminal diagram
=E1+TMA-CCWAUX-CS-CBT-0101-X1

Customer: EMPRESARIOS AGRUPADOS
C/Magallanes, 3
28015 MADRID
91 3098000
http://www.empresariosagrupados.es/

= REPORT

+ TMA-CCWAUX-CS-CBT-0101

Terminal diagram

F13_001_TK_V2

Strip

=E1+TMA-CCWAUX-CS-CBT-0101-X1

distribution terminal block

Function text	Cable name	Cable type	Target designation	Connection point	Terminal	Jumper	Wire	Target designation	Connection point	Cable name	Cable type	Page / column
24 VDC MOTION TEMPERATURE OK			-105U1	X31:5	34		+V1t	-105U1	X32:9			/107.5
24VDC TEMPERATURE OK			-020U1-VIN	1	35		+V1t	-209A1	1.1			/209.2
24VDC CONTROL EL1					36							/020.7
=			-105U1	XCV:0V	37							/020.7
24 VDC MOTION TEMPERATURE OK			-209A1	1.3	38		0V1	-105U1	X32:1			/107.5
24VDC CONTROL EL1					39		0V1	-020U1-VIN	2			/020.7

IK4-TEKNIKER
AVDA. OTAOLA 20
20600 Eibar (Gipuzkoa) Spain
Tfno.:(+34) 943 206744
Fax: (+34) 943 202757
Web: www.tekniker.es

Date	23/01/2017						
Reviewed	F.LÓPEZ	2.3	15/12/2017	JOSE MANUEL			
Drew by	jcastano	Review	Date	Name	Review	Date	Name

3151_LSST

MCS Design Electrical Schematics

LSST TELESCOPE

Replaces | Replaced by

Terminal diagram
=E1+TMA-CCWAUX-CS-CBT-0101-X1

Customer: EMPRESARIOS AGRUPADOS
C/Magallanes, 3
28015 MADRID
91 3098000
http://www.empresariosagrupados.es/

= REPORT
+ TMA-CCWAUX-CS-CBT-0101

Terminal diagram

F13_001_TK_V2

Strip

=E1+TMA-CCWAUX-CS-CBT-0101-X11

FOR MSK BRAKE terminal block

Function text	-109W1	-108W1	Cable name	Cable type	Target designation	Connection point	Terminal	Jumper	Wire	Target designation	Connection point	Cable name	Cable type	Page / column
	INK	INK												
BRAKE AZIMUTH CABLE WRAP 1		7			-108X1	C	1		601.01	-230K1	14			/108.8
=		8			-108X1	D	2		0V1	-X1	28			/108.8
BRAKE AZIMUTH CABLE WRAP 2	7				-109X1	3	3		601.01	-230K2	14			/109.7
=	8				-109X1	4	4		0V1	-X1	29			/109.7

IK4-TEKNIKER
AVDA. OTAOLA 20
20600 Eibar (Gipuzkoa) Spain
Tfno.:(+34) 943 206744
Fax: (+34) 943 202757
Web: www.tekniker.es

Date	23/01/2017							
Reviewed	F.LÓPEZ	2.3	15/12/2017	JOSE MANUEL				
Drew by	jcastano	Review	Date	Name	Review	Date	Name	

3151_LSST

MCS Design Electrical Schematics

LSST TELESCOPE

Replaces | Replaced by

Terminal diagram
=E1+TMA-CCWAUX-CS-CBT-0101-X11

Customer: EMPRESARIOS AGRUPADOS
C/Magallanes, 3
28015 MADRID
91 3098000
http://www.empresariosagrupados.es/

= REPORT

+ TMA-CCWAUX-CS-CBT-0101

Terminal diagram

F13_001_TK_V2

Strip

=E1+TMA-CCWAUX-CS-CBT-0101-X30

Function text	Cable name	Cable type	Target designation	Connection point	Terminal	Jumper	Wire	Target designation	Connection point	Cable name	Cable type	Page / column
PE			-002LF1	X3:PE	1	.	PE	PE				/002.1

IK4-TEKNIKER
AVDA. OTAOLA 20
20600 Eibar (Gipuzkoa) Spain
Tfno.:(+34) 943 206744
Fax: (+34) 943 202757
Web: www.tekniker.es

Date	23/01/2017							
Reviewed	F.LÓPEZ	2.3	15/12/2017	JOSE MANUEL				
Drew by	jcastano	Review	Date	Name	Review	Date	Name	

3151_LSST

MCS Design Electrical Schematics

LSST TELESCOPE

Replaces | Replaced by

Terminal diagram
=E1+TMA-CCWAUX-CS-CBT-0101-X30

Customer: EMPRESARIOS AGRUPADOS
C/Magallanes, 3
28015 MADRID
91 3098000
http://www.empresariosagrupados.es/

= REPORT
+ TMA-CCWAUX-CS-CBT-0101

Cable diagram

F09_001_TK1

Cable ID	Cable Type	no. of conductors	cross-section	cable length	function text
=E1+TMA-CCWAUX-CS-CBT-0101-106W1	HAS01.1				HAS01 BUSBAR

function text	X-Ref	Connected to	Pin	conductor	Connected to	Pin	X-Ref
	/106.1	-105U1	XDC:L+	**L+**	-105U2	XDC:L+	/108.1
	/106.1	-105U1	XDC:L-	**L-**	-105U2	XDC:L-	/108.2
	/106.1	-105U1	XPE:PE'	**PE**	-105U2	XPE:PE	/108.2
	/106.4	-105U1	XCV:0V	**24V**	-105U2	XCV:+24V	/108.1
	/106.4	-105U1	XCV:24V	**0V**	-105U2	XCV:0V	/108.0

IK4 TEKNIKER Research Alliance

IK4 TEKNIKER
POLO TECNOLOGICO DE EIBAR
C/Iñaki Goenaga nº 5
20600 Eibar (Gipuzkoa) Spain
Tfno.:(+34) 943 206744
Fax: (+34) 943 202757
Web: www.tekniker.es

Date	23/02/2017						
No traducido	J.LÓPEZ	2.3	15/12/2017	JOSE MANUEL			
Realizado	jcastano	Revisión	Date	Name	Revisión	Date	Name

MCS Design Electrical Schematics
LSST TELESCOPE

Sustituye a: | Replaced by

Cable diagram
=E1+TMA-CCWAUX-CS-CBT-0101-106W1

Cliente: EMPRESARIOS AGRUPADOS
C/Magallanes, 3
28015 MADRID
91 3098000
http://www.empresariosagrupados.es/

= REPORT
+ TMA-CCWAUX-CS-CBT-0101

Cable diagram

F09_001_TK1

Cable ID	Cable Type	no. of conductors	cross-section	cable length	function text
=E1+TMA-CCWAUX-CS-CBT-0101-108W1	TNK				Motor Azimuth cable wrap 1

function text	X-Ref	Connected to	Pin	conductor	Connected to	Pin	X-Ref
24VDC	/108.6	-108X1	1	**1**	-105U2-X5.1	X5.1:A1	/108.6
=	/108.6	-108X1	2	**2**	-105U2-X5.1	X5.1:A2	/108.6
=	/108.6	-108X1	3	**3**	-105U2-X5.1	X5.1:A3	/108.6
=	/108.6	-108X1	PE	**gn/ye**	-105U2-X5.1	X5.1:PE	/108.6
=	/108.7	-108X1	A	**5**	-105U2-X6.1	X6.1:1	/108.7
=	/108.7	-108X1	B	**6**	-105U2-X6.1	X6.1:2	/108.7
=	/108.8	-108X1	C	**7**	-X11	1	/108.8
=	/108.8	-108X1	D	**8**	-X11	2	/108.8
	/108.8	-105U2-XS	XS:SH	**SH1**	-108W1		/108.6
	/108.8	-105U2-XS	XS:SH	**SH2**	-108W1		/108.6
	/108.8	-105U2-XS	XS:SH	**SH3**	-108W1		/108.6

IK4 TEKNIKER Research Alliance

IK4 TEKNIKER
POLO TECNOLOGICO DE EIBAR
C/Iñaki Goenaga nº 5
20600 Eibar (Gipuzkoa) Spain
Tfno.:(+34) 943 206744
Fax: (+34) 943 202757
Web: www.tekniker.es

Date	23/02/2017						
No traducción	J.LÓPEZ	2.3	15/12/2017	JOSE MANUEL			
Realizado	jcastano	Revisión	Date	Name	Revisión	Date	Name

MCS Design Electrical Schematics
LSST TELESCOPE

Sustituye a: | Replaced by

Cable diagram
=E1+TMA-CCWAUX-CS-CBT-0101-108W1

Cliente: EMPRESARIOS AGRUPADOS
C/Magallanes, 3
28015 MADRID
91 3098000
http://www.empresariosagrupados.es/

= REPORT
+ TMA-CCWAUX-CS-CBT-0101

Cable diagram

F09_001_TK1

Cable ID	Cable Type	no. of conductors	cross-section	cable length	function text
=E1+TMA-CCWAUX-CS-CBT-0101-108W2	TRK				Motor Azimuth cable wrap 1

function text	X-Ref	Connected to	Pin	conductor	Connected to	Pin	X-Ref
24VDC	/108.6	-108X2	1	**1**	-108M2-PWR	XRLS:U1	/108.6
=	/108.6	-108X2	2	**2**	-108M2-PWR	XRLS:V1	/108.6
=	/108.6	-108X2	3	**3**	-108M2-PWR	XRLS:W1	/108.6
=	/108.6	-108X2	PE	**gn/ye**	-108M2-PWR	XRLS:PE	/108.6
=	/108.7	-108X2	A	**5**	-108M2-PWR	XRLS:5	/108.7
=	/108.7	-108X2	B	**6**	-108M2-PWR	XRLS:6	/108.7
=	/108.8	-108X2	C	**7**	-108M2-PWR	XRLS:7	/108.8
=	/108.8	-108X2	D	**8**	-108M2-PWR	XRLS:8	/108.8
Motor Azimuth cable wrap 1	/108.6	-108W2		**SH1**	-108M2-PWR	XRLS:9	/108.8
=	/108.6	-108W2		**SH2**	-108M2-PWR	XRLS:9	/108.8
=	/108.6	-108W2		**SH3**	-108M2-PWR	XRLS:9	/108.8

IK4 TEKNIKER Research Alliance
IK4 TEKNIKER
POLO TECNOLOGICO DE EIBAR
C/Iñaki Goenaga nº 5
20600 Eibar (Gipuzkoa) Spain
Tfno.:(+34) 943 206744
Fax: (+34) 943 202757
Web: www.tekniker.es

Date	23/02/2017						
No traducción	E.LÓPEZ	2.3	15/12/2017	JOSE MANUEL			
Realizado	jcastano	Revisión	Date	Name	Revisión	Date	Name

MCS Design Electrical Schematics
LSST TELESCOPE

Sustituye a: | Replaced by

Cable diagram
=E1+TMA-CCWAUX-CS-CBT-0101-108W2

Cliente: EMPRESARIOS AGRUPADOS
C/Magallanes, 3
28015 MADRID
91 3098000
http://www.empresariosagrupados.es/

= REPORT
+ TMA-CCWAUX-CS-CBT-0101

Cable diagram

F09_001_TK1

Cable ID	Cable Type	no. of conductors	cross-section	cable length	function text
=E1+TMA-CCWAUX-CS-CBT-0101-108W3	TSK				Encoder Azimuth cable wrap 1

function text	X-Ref	Connected to	Pin	conductor	Connected to	Pin	X-Ref
24VDC	/108.5	-108X3		**e**	-105U2-X4.1	X4.1:E	/108.5

IK4 TEKNIKER Research Alliance

IK4 TEKNIKER
POLO TECNOLOGICO DE EIBAR
C/Iñaki Goenaga nº 5
20600 Eibar (Gipuzkoa) Spain
Tfno.:(+34) 943 206744
Fax: (+34) 943 202757
Web: www.tekniker.es

Date	23/02/2017						
No traducción	LÓPEZ	2.3	15/12/2017	JOSE MANUEL			
Realizado	jcastano	Revisión	Date	Name	Revisión	Date	Name

MCS Design Electrical Schematics

LSST TELESCOPE

Sustituye a: | Replaced by

Cable diagram
=E1+TMA-CCWAUX-CS-CBT-0101-108W3

Cliente: EMPRESARIOS AGRUPADOS
C/Magallanes, 3
28015 MADRID
91 3098000

http://www.empresariosagrupados.es/

= REPORT

+ TMA-CCWAUX-CS-CBT-0101

Cable diagram

F09_001_TK1

Cable ID	Cable Type	no. of conductors	cross-section	cable length	function text
=E1+TMA-CCWAUX-CS-CBT-0101-108W4	TMK				Encoder Azimuth cable wrap 1

function text	X-Ref	Connected to	Pin	conductor	Connected to	Pin	X-Ref
				1			
				2			
				3			
				gn/ye			
				5			
				6			
				7			
				8			
				SH1			
				SH2			
				SH3			
24VDC	/108.5	-108X4		**e**	-108M2-EN	XRLS:EN	/108.5

◁ 3004

3006 ▷

IK4 TEKNIKER
Research Alliance
IK4 TEKNIKER
POLO TECNOLOGICO DE EIBAR
C/Iñaki Goenaga nº 5
20600 Eibar (Gipuzkoa) Spain
Tfno.:(+34) 943 206744
Fax: (+34) 943 202757
Web: www.tekniker.es

Date	23/02/2017						
No traducido	J.LÓPEZ	2.3	15/12/2017	JOSE MANUEL			
Realizado	jcastano	Revisión	Date	Name	Revisión	Date	Name

MCS Design Electrical Schematics
LSST TELESCOPE

Sustituye a: | Replaced by

Cable diagram
=E1+TMA-CCWAUX-CS-CBT-0101-108W4

Cliente: EMPRESARIOS AGRUPADOS
C/Magallanes, 3
28015 MADRID
91 3098000
http://www.empresariosagrupados.es/

= REPORT
+ TMA-CCWAUX-CS-CBT-0101

Cable diagram

F09_001_TK1

Cable ID	Cable Type	no. of conductors	cross-section	cable length	function text
=E1+TMA-CCWAUX-CS-CBT-0101-108W5	ETH CAT6	5	1		MULTI_ETH

function text	X-Ref	Connected to	Pin	conductor	Connected to	Pin	X-Ref
	/108.7	-105U2-X24	X49.1:1-8	**ETH**	-209A1	X7E2:1-8	/209.2

IK4 TEKNIKER Research Alliance

IK4 TEKNIKER
POLO TECNOLOGICO DE EIBAR
C/Iñaki Goenaga nº 5
20600 Eibar (Gipuzkoa) Spain
Tfno.:(+34) 943 206744
Fax: (+34) 943 202757
Web: www.tekniker.es

Date	23/02/2017						
No traducido	E.LÓPEZ	2.3	15/12/2017	JOSE MANUEL			
Realizado	jcastano	Revisión	Date	Name	Revisión	Date	Name

MCS Design Electrical Schematics
LSST TELESCOPE

Sustituye a: | Replaced by

Cable diagram
=E1+TMA-CCWAUX-CS-CBT-0101-108W5

Cliente: EMPRESARIOS AGRUPADOS
C/Magallanes, 3
28015 MADRID
91 3098000
http://www.empresariosagrupados.es/

= REPORT
+ TMA-CCWAUX-CS-CBT-0101

Cable diagram

F09_001_TK1

Cable ID	Cable Type	no. of conductors	cross-section	cable length	function text
=E1+TMA-CCWAUX-CS-CBT-0101-109W1	TUK				Motor azimuth cable wrap 2

function text	X-Ref	Connected to	Pin	conductor	Connected to	Pin	X-Ref
24VDC	/109.5	-109X1	U	**1**	-105U2-X5.2	X5.2:A1	/109.5
=	/109.5	-109X1	V	**2**	-105U2-X5.2	X5.2:A2	/109.5
=	/109.5	-109X1	W	**3**	-105U2-X5.2	X5.2:A3	/109.5
=	/109.5	-109X1	PE	**gn/ye**	-105U2-X5.2	X5.2:PE	/109.5
=	/109.6	-109X1	1	**5**	-105U2-X6.2	X6.2:1	/109.6
=	/109.6	-109X1	2	**6**	-105U2-X6.2	X6.2:2	/109.6
=	/109.7	-109X1	3	**7**	-X11	3	/109.7
=	/109.7	-109X1	4	**8**	-X11	4	/109.7
	/109.7	-105U2-XS	XS:SH	**SH1**	-109W1		/109.5
	/109.7	-105U2-XS	XS:SH	**SH2**	-109W1		/109.5
	/109.7	-105U2-XS	XS:SH	**SH3**	-109W1		/109.5

IK4 TEKNIKER Research Alliance

IK4 TEKNIKER
POLO TECNOLOGICO DE EIBAR
C/Iñaki Goenaga nº 5
20600 Eibar (Gipuzkoa) Spain
Tfno.:(+34) 943 206744
Fax: (+34) 943 202757
Web: www.tekniker.es

Date	23/02/2017						
No traducido	J.LÓPEZ	2.3	15/12/2017	JOSE MANUEL			
Realizado	jcastano	Revisión	Date	Name	Revisión	Date	Name

MCS Design Electrical Schematics
LSST TELESCOPE

Sustituye a: | Replaced by

Cable diagram
=E1+TMA-CCWAUX-CS-CBT-0101-109W1

Cliente: EMPRESARIOS AGRUPADOS
C/Magallanes, 3
28015 MADRID
91 3098000
http://www.empresariosagrupados.es/

= REPORT
+ TMA-CCWAUX-CS-CBT-0101

Cable diagram

F09_001_TK1

Cable ID	Cable Type	no. of conductors	cross-section	cable length	function text
=E1+TMA-CCWAUX-CS-CBT-0101-109W2	TRK				Motor azimuth cable wrap 2

function text	X-Ref	Connected to	Pin	conductor	Connected to	Pin	X-Ref
24VDC	/109.5	-109X2	U	**1**	-109M2-PWR	XRLS:U1	/109.5
=	/109.5	-109X2	V	**2**	-109M2-PWR	XRLS:V1	/109.5
=	/109.5	-109X2	W	**3**	-109M2-PWR	XRLS:W1	/109.5
=	/109.5	-109X2	PE	**gn/ye**	-109M2-PWR	XRLS:PE	/109.5
=	/109.6	-109X2	1	**5**	-109M2-PWR	XRLS:5	/109.6
=	/109.6	-109X2	2	**6**	-109M2-PWR	XRLS:6	/109.6
=	/109.7	-109X2	3	**7**	-109M2-PWR	XRLS:7	/109.7
=	/109.7	-109X2	4	**8**	-109M2-PWR	XRLS:8	/109.7
Motor azimuth cable wrap 2	/109.5	-109W2		**SH1**	-109M2-PWR	XRLS:9	/109.7
=	/109.5	-109W2		**SH2**	-109M2-PWR	XRLS:9	/109.7
=	/109.5	-109W2		**SH3**	-109M2-PWR	XRLS:9	/109.7

IK4 TEKNIKER Research Alliance
IK4 TEKNIKER
POLO TECNOLOGICO DE EIBAR
C/Iñaki Goenaga nº 5
20600 Eibar (Gipuzkoa) Spain
Tfno.:(+34) 943 206744
Fax: (+34) 943 202757
Web: www.tekniker.es

Date	23/02/2017						
No traducido	J.LÓPEZ	2.3	15/12/2017	JOSE MANUEL			
Realizado	jcastano	Revisión	Date	Name	Revisión	Date	Name

MCS Design Electrical Schematics
LSST TELESCOPE

Sustituye a: | Replaced by

Cable diagram
=E1+TMA-CCWAUX-CS-CBT-0101-109W2

Cliente: EMPRESARIOS AGRUPADOS
C/Magallanes, 3
28015 MADRID
91 3098000
http://www.empresariosagrupados.es/

= REPORT
+ TMA-CCWAUX-CS-CBT-0101

Cable diagram

F09_001_TK1

Cable ID	Cable Type	no. of conductors	cross-section	cable length	function text
=E1+TMA-CCWAUX-CS-CBT-0101-109W3	TRK				Encoder Azimuth cable wrap 2

function text	X-Ref	Connected to	Pin	conductor	Connected to	Pin	X-Ref
24VDC	/109.4	-109X3		**e**	-105U2-X4.2	X4.2:E	/109.4

◁ 3008

3010 ▷

IK4 TEKNIKER Research Alliance
IK4 TEKNIKER
POLO TECNOLOGICO DE EIBAR
C/Iñaki Goenaga nº 5
20600 Eibar (Gipuzkoa) Spain
Tfno.:(+34) 943 206744
Fax: (+34) 943 202757
Web: www.tekniker.es

Date	23/02/2017						
No traducido	J.LÓPEZ	2.3	15/12/2017	JOSE MANUEL			
Realizado	jcastano	Revisión	Date	Name	Revisión	Date	Name

MCS Design Electrical Schematics
LSST TELESCOPE

Sustituye a: | Replaced by

Cable diagram
=E1+TMA-CCWAUX-CS-CBT-0101-109W3

Cliente: EMPRESARIOS AGRUPADOS
C/Magallanes, 3
28015 MADRID
91 3098000
http://www.empresariosagrupados.es/

= REPORT
+ TMA-CCWAUX-CS-CBT-0101

Cable diagram

F09_001_TK1

Cable ID	Cable Type	no. of conductors	cross-section	cable length	function text
=E1+TMA-CCWAUX-CS-CBT-0101-109W4	TMK				Encoder Azimuth cable wrap 2

function text	X-Ref	Connected to	Pin	conductor	Connected to	Pin	X-Ref
24VDC	/109.4	-109X4		**e**	-109M2-EN	XRLS:EN	/109.4

◁ 3009

3011 ▷

IK4 TEKNIKER
Research Alliance
IK4 TEKNIKER
POLO TECNOLOGICO DE EIBAR
C/Iñaki Goenaga nº 5
20600 Eibar (Gipuzkoa) Spain
Tfno.:(+34) 943 206744
Fax: (+34) 943 202757
Web: www.tekniker.es

Date	23/02/2017						
No traducido	J.LÓPEZ	2.3	15/12/2017	JOSE MANUEL			
Realizado	jcastano	Revisión	Date	Name	Revisión	Date	Name

MCS Design Electrical Schematics
LSST TELESCOPE

Sustituye a: | Replaced by

Cable diagram
=E1+TMA-CCWAUX-CS-CBT-0101-109W4

Cliente: EMPRESARIOS AGRUPADOS
C/Magallanes, 3
28015 MADRID
91 3098000
http://www.empresariosagrupados.es/

= REPORT
+ TMA-CCWAUX-CS-CBT-0101

Cable diagram

F09_001_TK1

Cable ID	Cable Type	no. of conductors	cross-section	cable length	function text
=E1+TMA-CCWAUX-CS-CBT-0101-206W1	ETH CAT6	5	1		FACILITIES ETHERNET

function text	X-Ref	Connected to	Pin	conductor	Connected to	Pin	X-Ref
	/206.2	-206A1-DP1	ETH	**ETH**	-701U1	X1:IN:1	/701.1

◁ 3010

3012 ▷

IK4 TEKNIKER
Research Alliance
IK4 TEKNIKER
POLO TECNOLOGICO DE EIBAR
C/Iñaki Goenaga nº 5
20600 Eibar (Gipuzkoa) Spain
Tfno.:(+34) 943 206744
Fax: (+34) 943 202757
Web: www.tekniker.es

Date	23/02/2017						
No traducido	J.LÓPEZ	2.3	15/12/2017	JOSE MANUEL			
Realizado	jcastano	Revisión	Date	Name	Revisión	Date	Name

MCS Design Electrical Schematics
LSST TELESCOPE

Sustituye a: | Replaced by

Cable diagram
=E1+TMA-CCWAUX-CS-CBT-0101-206W1

Cliente: EMPRESARIOS AGRUPADOS
C/Magallanes, 3
28015 MADRID
91 3098000
http://www.empresariosagrupados.es/

= REPORT
+ TMA-CCWAUX-CS-CBT-0101

Cable diagram

F09_001_TK1

Cable ID	Cable Type	no. of conductors	cross-section	cable length	function text
=E1+TMA-CCWAUX-CS-CBT-0101-206W2	ETH CAT6	5	1		MOBILE PANEL ETHERNET

function text	X-Ref	Connected to	Pin	conductor	Connected to	Pin	X-Ref
	/206.6	-206A1-ETH	1	**ETH**	-255U2-X3	ETH	/255.5

IK4 TEKNIKER Research Alliance

IK4 TEKNIKER
POLO TECNOLOGICO DE EIBAR
C/Iñaki Goenaga nº 5
20600 Eibar (Gipuzkoa) Spain
Tfno.:(+34) 943 206744
Fax: (+34) 943 202757
Web: www.tekniker.es

Date	23/02/2017						
No traducido	E.LÓPEZ	2.3	15/12/2017	JOSE MANUEL			
Realizado	jcastano	Revisión	Date	Name	Revisión	Date	Name

MCS Design Electrical Schematics
LSST TELESCOPE

Sustituye a: | Replaced by

Cable diagram
=E1+TMA-CCWAUX-CS-CBT-0101-206W2

Cliente: EMPRESARIOS AGRUPADOS
C/Magallanes, 3
28015 MADRID
91 3098000
http://www.empresariosagrupados.es/

= REPORT
+ TMA-CCWAUX-CS-CBT-0101

Cable diagram

F09_001_TK1

Cable ID	Cable Type	no. of conductors	cross-section	cable length	function text
=E1+TMA-CCWAUX-CS-CBT-0101-206W3	ETH CAT6	5	1		CRIO ETHERNET

function text	X-Ref	Connected to	Pin	conductor	Connected to	Pin	X-Ref
	/206.6	-206A1-ETH	2	**ETH**	-210A1-ETH	ETH:OUT	/211.4

◁ 3012

3014 ▷

IK4 TEKNIKER
Research Alliance
IK4 TEKNIKER
POLO TECNOLOGICO DE EIBAR
C/Iñaki Goenaga nº 5
20600 Eibar (Gipuzkoa) Spain
Tfno.:(+34) 943 206744
Fax: (+34) 943 202757
Web: www.tekniker.es

Date	23/02/2017						
No traducido	J.LÓPEZ	2.3	15/12/2017	JOSE MANUEL			
Realizado	jcastano	Revisión	Date	Name	Revisión	Date	Name

MCS Design Electrical Schematics
LSST TELESCOPE

Sustituye a: | Replaced by

Cable diagram
=E1+TMA-CCWAUX-CS-CBT-0101-206W3

Cliente: EMPRESARIOS AGRUPADOS
C/Magallanes, 3
28015 MADRID
91 3098000
http://www.empresariosagrupados.es/

= REPORT
+ TMA-CCWAUX-CS-CBT-0101

Cable diagram

F09_001_TK1

Cable ID	Cable Type	no. of conductors	cross-section	cable length	function text
=E1+TMA-CCWAUX-CS-CBT-0101-209W1	ETH CAT6	5	1		MULTI_ETH

function text	X-Ref	Connected to	Pin	conductor	Connected to	Pin	X-Ref
	/108.6	-105U2-X25	X49.1:1-8	**ETH**	-209A1	X7E1:1-8	/209.1

◁ 3013

3015 ▷

IK4 TEKNIKER
Research Alliance
IK4 TEKNIKER
POLO TECNOLOGICO DE EIBAR
C/Iñaki Goenaga nº 5
20600 Eibar (Gipuzkoa) Spain
Tfno.:(+34) 943 206744
Fax: (+34) 943 202757
Web: www.tekniker.es

Date	23/02/2017						
No traducido	J.LÓPEZ	2.3	15/12/2017	JOSE MANUEL			
Realizado	jcastano	Revisión	Date	Name	Revisión	Date	Name

MCS Design Electrical Schematics
LSST TELESCOPE

Sustituye a: | Replaced by

Cable diagram
=E1+TMA-CCWAUX-CS-CBT-0101-209W1

Cliente: EMPRESARIOS AGRUPADOS
C/Magallanes, 3
28015 MADRID
91 3098000
http://www.empresariosagrupados.es/

= REPORT
+ TMA-CCWAUX-CS-CBT-0101

Cable diagram

F09_001_TK1

Cable ID	Cable Type	no. of conductors	cross-section	cable length	function text
=E1+TMA-CCWAUX-CS-CBT-0101-209W2	ETH CAT6	5	1		ETHERCAT

function text	X-Ref	Connected to	Pin	conductor	Connected to	Pin	X-Ref
	/209.6	-209A1	X7E3:1-8	**ETH**	-210A1-ETH	POWER:IN	/211.3

◁ 3014

3016 ▷

IK4 TEKNIKER Research Alliance
IK4 TEKNIKER
POLO TECNOLOGICO DE EIBAR
C/Iñaki Goenaga nº 5
20600 Eibar (Gipuzkoa) Spain
Tfno.:(+34) 943 206744
Fax: (+34) 943 202757
Web: www.tekniker.es

Date	23/02/2017						
No traducido	J.LÓPEZ	2.3	15/12/2017	JOSE MANUEL			
Realizado	jcastano	Revisión	Date	Name	Revisión	Date	Name

MCS Design Electrical Schematics
LSST TELESCOPE

Sustituye a: | Replaced by

Cable diagram
=E1+TMA-CCWAUX-CS-CBT-0101-209W2

Cliente: EMPRESARIOS AGRUPADOS
C/Magallanes, 3
28015 MADRID
91 3098000
http://www.empresariosagrupados.es/

= REPORT
+ TMA-CCWAUX-CS-CBT-0101

Cable diagram

F09_001_TK1

Cable ID	Cable Type	no. of conductors	cross-section	cable length	function text
=E1+TMA-CCWAUX-CS-CBT-0101-320W1	JZ-602-CY 3G1	3	1		CAMERA CABLE WRAP POSITIVE Limit Switch

function text	X-Ref	Connected to	Pin	conductor	Connected to	Pin	X-Ref
24VDC	/320.1	+TMA-EL-CS-CBT-0105-X2_	10	**1**	-320S1	31	/320.1
=	/320.1	+TMA-EL-CS-CBT-0105-X2_	19	**2**	-320S1	32	/320.1
	/320.2	+TMA-EL-CS-CBT-0105-PE	2	**GNYE**	-320S1	PE	/320.2
	/320.2	+TMA-EL-CS-CBT-0105-320W1-SH		**SH**	-320W2		/320.3

IK4 TEKNIKER Research Alliance

IK4 TEKNIKER
POLO TECNOLOGICO DE EIBAR
C/Iñaki Goenaga nº 5
20600 Eibar (Gipuzkoa) Spain
Tfno.:(+34) 943 206744
Fax: (+34) 943 202757
Web: www.tekniker.es

Date	23/02/2017						
No traducido	J.LÓPEZ	2.3	15/12/2017	JOSE MANUEL			
Realizado	jcastano	Revisión	Date	Name	Revisión	Date	Name

MCS Design Electrical Schematics
LSST TELESCOPE

Sustituye a: | Replaced by

Cable diagram
=E1+TMA-CCWAUX-CS-CBT-0101-320W1

Cliente: EMPRESARIOS AGRUPADOS
C/Magallanes, 3
28015 MADRID
91 3098000
http://www.empresariosagrupados.es/

= REPORT
+ TMA-CCWAUX-CS-CBT-0101

Cable diagram

F09_001_TK1

Cable ID	Cable Type	no. of conductors	cross-section	cable length	function text
=E1+TMA-CCWAUX-CS-CBT-0101-320W2	JZ-602-CY 3G1	3	1		CAMERA CABLE WRAP NEGATIVE Limit Switch

function text	X-Ref	Connected to	Pin	conductor	Connected to	Pin	X-Ref
24VDC	/320.3	+TMA-EL-CS-CBT-0105-X2_	11	**1**	-320S2	31	/320.3
=	/320.4	+TMA-EL-CS-CBT-0105-X2_	20	**2**	-320S2	32	/320.3
	/320.4	+TMA-EL-CS-CBT-0105-PE	3	**GNYE**	-320S2	PE	/320.4
	/320.4	+TMA-EL-CS-CBT-0105-320W2-SH		**SH**	-320W3		/320.5

◁ 3016

3018 ▷

IK4 TEKNIKER
Research Alliance
IK4 TEKNIKER
POLO TECNOLOGICO DE EIBAR
C/Iñaki Goenaga nº 5
20600 Eibar (Gipuzkoa) Spain
Tfno.:(+34) 943 206744
Fax: (+34) 943 202757
Web: www.tekniker.es

Date	23/02/2017						
No traducido	J.LÓPEZ	2.3	15/12/2017	JOSE MANUEL			
Realizado	jcastano	Revisión	Date	Name	Revisión	Date	Name

MCS Design Electrical Schematics
LSST TELESCOPE

Sustituye a: | Replaced by

Cable diagram
=E1+TMA-CCWAUX-CS-CBT-0101-320W2

Cliente: EMPRESARIOS AGRUPADOS
C/Magallanes, 3
28015 MADRID
91 3098000
http://www.empresariosagrupados.es/

= REPORT
+ TMA-CCWAUX-CS-CBT-0101

Cable diagram

F09_001_TK1

Cable ID	Cable Type	no. of conductors	cross-section	cable length	function text
=E1+TMA-CCWAUX-CS-CBT-0101-320W3	JZ-602-CY 3G1	3	1		CAMERA CABLE WRAP POSITIVE Limit Switch

function text	X-Ref	Connected to	Pin	conductor	Connected to	Pin	X-Ref
24VDC	/320.5	+TMA-EL-CS-CBT-0105-X2_	12	**1**	-320S3	31	/320.5
=	/320.6	+TMA-EL-CS-CBT-0105-X2_	21	**2**	-320S3	32	/320.5
	/320.6	+TMA-EL-CS-CBT-0105-PE	4	**GNYE**	-320S3	PE	/320.6
	/320.6	+TMA-EL-CS-CBT-0105-320W3-SH		**SH**	-320W4		/320.7

◁ 3017

3019 ▷

IK4 TEKNIKER
Research Alliance
IK4 TEKNIKER
POLO TECNOLOGICO DE EIBAR
C/Iñaki Goenaga nº 5
20600 Eibar (Gipuzkoa) Spain
Tfno.:(+34) 943 206744
Fax: (+34) 943 202757
Web: www.tekniker.es

Date	23/02/2017						
No traducido	J.LÓPEZ	2.3	15/12/2017	JOSE MANUEL			
Realizado	jcastano	Revisión	Date	Name	Revisión	Date	Name

MCS Design Electrical Schematics
LSST TELESCOPE

Sustituye a: | Replaced by

Cable diagram
=E1+TMA-CCWAUX-CS-CBT-0101-320W3

Cliente: EMPRESARIOS AGRUPADOS
C/Magallanes, 3
28015 MADRID
91 3098000
http://www.empresariosagrupados.es/

= REPORT
+ TMA-CCWAUX-CS-CBT-0101

Cable diagram

F09_001_TK1

Cable ID	Cable Type	no. of conductors	cross-section	cable length	function text
=E1+TMA-CCWAUX-CS-CBT-0101-320W4	74-602-CY 3G1	3	1		CAMERA CABLE WRAP NEGATIVE Limit Switch

function text	X-Ref	Connected to	Pin	conductor	Connected to	Pin	X-Ref
24VDC	/320.7	+TMA-EL-CS-CBT-0105-X2_	13	**1**	-320S4	31	/320.7
=	/320.8	+TMA-EL-CS-CBT-0105-X2_	22	**2**	-320S4	32	/320.8
	/320.8	+TMA-EL-CS-CBT-0105-PE	5	**GNYE**	-320S4	PE	/320.8
	/320.8	+TMA-EL-CS-CBT-0105-320W4-SH		**SH**	-320W4		/320.7

◁ 3018

3020 ▷

IK4 TEKNIKER
Research Alliance
IK4 TEKNIKER
POLO TECNOLOGICO DE EIBAR
C/Iñaki Goenaga nº 5
20600 Eibar (Gipuzkoa) Spain
Tfno.:(+34) 943 206744
Fax: (+34) 943 202757
Web: www.tekniker.es

Date	23/02/2017						
No traducido	J.LÓPEZ	2.3	15/12/2017	JOSE MANUEL			
Realizado	jcastano	Revisión	Date	Name	Revisión	Date	Name

MCS Design Electrical Schematics
LSST TELESCOPE

Sustituye a: | Replaced by

Cable diagram
=E1+TMA-CCWAUX-CS-CBT-0101-320W4

Cliente: EMPRESARIOS AGRUPADOS
C/Magallanes, 3
28015 MADRID
91 3098000
http://www.empresariosagrupados.es/

= REPORT
+ TMA-CCWAUX-CS-CBT-0101

Cable diagram

F09_001_TK1

Cable ID	Cable Type	no. of conductors	cross-section	cable length	function text
=E1+TMA-CCWAUX-CS-CBT-0101-320W5A	JZA-602-CY / OZ-602-CY	18	1,5		CCW SIGNALS INTERFACE

function text	X-Ref	Connected to	Pin	conductor	Connected to	Pin	X-Ref
24VDC	/320.1	+TMA-EL-CS-CBT-0105-X2_	10	**1**	-320X1M	1	/320.1
=	/320.1	+TMA-EL-CS-CBT-0105-X2_	16	**2**	-320X1M	2	/320.1
=	/320.1	+TMA-EL-CS-CBT-0105-X2_	19	**3**	-320X1M	3	/320.1
=	/320.4	+TMA-EL-CS-CBT-0105-X2_	20	**4**	-320X1M	4	/320.4
=	/320.6	+TMA-EL-CS-CBT-0105-X2_	21	**5**	-320X1M	5	/320.6
=	/320.8	+TMA-EL-CS-CBT-0105-X2_	22	**6**	-320X1M	6	/320.8
CAMERA CABLE WRAP LUBRICACION PINION 1	/325.0	+TMA-EL-CS-CBT-0105-X2_	1	**7**	-320X1M	7	/325.0
=	/325.1	+TMA-EL-CS-CBT-0105-X2_	3	**8**	-320X1M	8	/325.1
=	/325.1	+TMA-EL-CS-CBT-0105-X2_	5	**9**	-320X1M	9	/325.1
=	/325.1	+TMA-EL-CS-CBT-0105-X2_	6	**10**	-320X1M	10	/325.1
=	/325.2	+TMA-EL-CS-CBT-0105-X2_	23	**11**	-320X1M	11	/325.2
CAMERA CABLE WRAP LUBRICACION PINION 2	/325.5	+TMA-EL-CS-CBT-0105-X2_	7	**12**	-320X1M	12	/325.5
=	/325.5	+TMA-EL-CS-CBT-0105-X2_	8	**13**	-320X1M	13	/325.5
=	/325.6	+TMA-EL-CS-CBT-0105-X2_	24	**14**	-320X1M	14	/325.6
=	/325.7	+TMA-EL-CS-CBT-0105-X2_	9	**15**	-320X1M	15	/325.7
				16			
				17			
	/320.9	+TMA-EL-CS-CBT-0105-PE	1	**GNYE**	-320X1M	16	/320.9
CAMERA CABLE WRAP POSITIVE Limit Switch	/320.1	-320W1		**SH**	-320X1M	SH	/320.9

◁ 3019

3021 ▷

IK4 TEKNIKER Research Alliance
IK4 TEKNIKER
POLO TECNOLOGICO DE EIBAR
C/Iñaki Goenaga nº 5
20600 Eibar (Gipuzkoa) Spain
Tfno.:(+34) 943 206744
Fax: (+34) 943 202757
Web: www.tekniker.es

Date	23/02/2017						
No traducción	J.LÓPEZ	2.3	15/12/2017	JOSE MANUEL			
Realizado	jcastano	Revisión	Date	Name	Revisión	Date	Name

MCS Design Electrical Schematics
LSST TELESCOPE

Sustituye a: | Replaced by

Cable diagram
=E1+TMA-CCWAUX-CS-CBT-0101-320W5A

Cliente: EMPRESARIOS AGRUPADOS
C/Magallanes, 3
28015 MADRID
91 3098000
http://www.empresariosagrupados.es/

= REPORT
+ TMA-CCWAUX-CS-CBT-0101

Cable diagram

F09_001_TK1

Cable ID	Cable Type	no. of conductors	cross-section	cable length	function text
=E1+TMA-CCWAUX-CS-CBT-0101-320W7	JZ-602-CY / OZ-602-CY	18	1,5		CCW SIGNALS INTERFACE

function text	X-Ref	Connected to	Pin	conductor	Connected to	Pin	X-Ref
24VDC	/320.1	-320X1F	1	**1**	-320X2M	A1	/320.1
=	/320.1	-320X1F	2	**2**	-320X2M	A2	/320.1
=	/320.1	-320X1F	3	**3**	-320X2M	A3	/320.1
=	/320.4	-320X1F	4	**4**	-320X2M	A4	/320.4
=	/320.6	-320X1F	5	**5**	-320X2M	A5	/320.6
=	/320.8	-320X1F	6	**6**	-320X2M	A6	/320.8
CAMERA CABLE WRAP LUBRICACION PINION 1	/325.0	-320X1F	7	**7**	-320X2M	C1	/325.0
=	/325.1	-320X1F	8	**8**	-320X2M	C2	/325.1
=	/325.1	-320X1F	9	**9**	-320X2M	C3	/325.1
=	/325.1	-320X1F	10	**10**	-320X2M	C4	/325.1
=	/325.2	-320X1F	11	**11**	-320X2M	C5	/325.2
CAMERA CABLE WRAP LUBRICACION PINION 2	/325.5	-320X1F	12	**12**	-320X2M	C6	/325.5
=	/325.5	-320X1F	13	**13**	-320X2M	C7	/325.5
=	/325.6	-320X1F	14	**14**	-320X2M	C8	/325.6
				15			
				16			
				17			
				GNYE			
	/320.9	-320W7-SH		**SH**	-320W7		/320.1
24VDC	/320.9	-320X1F	16	**GNYE**	-320X2M	A7	/320.9
=	/320.9	-320X1F	SH		-320W7		/320.1

◁ 3020

3022 ▷

IK4 TEKNIKER Research Alliance
IK4 TEKNIKER
POLO TECNOLOGICO DE EIBAR
C/Iñaki Goenaga nº 5
20600 Eibar (Gipuzkoa) Spain
Tfno.:(+34) 943 206744
Fax: (+34) 943 202757
Web: www.tekniker.es

Date	23/02/2017						
No traducción	J.LÓPEZ	2.3	15/12/2017	JOSE MANUEL			
Realizado	jcastano	Revisión	Date	Name	Revisión	Date	Name

MCS Design Electrical Schematics
LSST TELESCOPE

Sustituye a: | Replaced by

Cable diagram
=E1+TMA-CCWAUX-CS-CBT-0101-320W7

Cliente: EMPRESARIOS AGRUPADOS
C/Magallanes, 3
28015 MADRID
91 3098000
http://www.empresariosagrupados.es/

= REPORT
+ TMA-CCWAUX-CS-CBT-0101

Cable diagram

F09_001_TK1

Cable ID	Cable Type	no. of conductors	cross-section	cable length	function text
=E1+TMA-CCWAUX-CS-CBT-0101-325W1	4x 0.25mm2	4	0,25		LUBRICATION BKI 101 e CABLE

function text	X-Ref	Connected to	Pin	conductor	Connected to	Pin	X-Ref
CAMERA CABLE WRAP LUBRICACION PINION 1	/325.1	+TMA-EL-CS-CBT-0105-X2_	3	**BK**	-325U1	BK	/325.1
=	/325.0	+TMA-EL-CS-CBT-0105-X2_	1	**BN**	-325U1	BN	/325.0
=	/325.1	+TMA-EL-CS-CBT-0105-X2_	6	**BU**	-325U1	BU	/325.1
=	/325.1	+TMA-EL-CS-CBT-0105-X2_	5	**WH**	-325U1	WH	/325.1

IK4 TEKNIKER Research Alliance

IK4 TEKNIKER
POLO TECNOLOGICO DE EIBAR
C/Iñaki Goenaga nº 5
20600 Eibar (Gipuzkoa) Spain
Tfno.:(+34) 943 206744
Fax: (+34) 943 202757
Web: www.tekniker.es

Date	23/02/2017						
No traducido	J.LÓPEZ	2.3	15/12/2017	JOSE MANUEL			
Realizado	jcastano	Revisión	Date	Name	Revisión	Date	Name

MCS Design Electrical Schematics
LSST TELESCOPE

Sustituye a: | Replaced by

Cable diagram
=E1+TMA-CCWAUX-CS-CBT-0101-325W1

Cliente: EMPRESARIOS AGRUPADOS
C/Magallanes, 3
28015 MADRID
91 3098000
http://www.empresariosagrupados.es/

= REPORT
+ TMA-CCWAUX-CS-CBT-0101

Cable diagram

F09_001_TK1

Cable ID	Cable Type	no. of conductors	cross-section	cable length	function text
=E1+TMA-CCWAUX-CS-CBT-0101-325W2	320,14mm2	3	0,14		emptying monitor cable

function text	X-Ref	Connected to	Pin	conductor	Connected to	Pin	X-Ref
CAMERA CABLE WRAP LUBRICACION PINION 1	/325.2	+TMA-EL-CS-CBT-0105-X2_	23	**BK**	-325U1	BK	/325.2
=	/325.2	+TMA-EL-CS-CBT-0105-X2_	14	**BN**	-325U1	BN	/325.2
=	/325.2	+TMA-EL-CS-CBT-0105-X2_	17	**BU**	-325U1	BU	/325.2

IK4 TEKNIKER Research Alliance

IK4 TEKNIKER
POLO TECNOLOGICO DE EIBAR
C/Iñaki Goenaga nº 5
20600 Eibar (Gipuzkoa) Spain
Tfno.:(+34) 943 206744
Fax: (+34) 943 202757
Web: www.tekniker.es

Date	23/02/2017						
No traducido	J.LÓPEZ	2.3	15/12/2017	JOSE MANUEL			
Realizado	jcastano	Revisión	Date	Name	Revisión	Date	Name

MCS Design Electrical Schematics

LSST TELESCOPE

Sustituye a: | Replaced by

Cable diagram
=E1+TMA-CCWAUX-CS-CBT-0101-325W2

Cliente: EMPRESARIOS AGRUPADOS
C/Magallanes, 3
28015 MADRID
91 3098000

http://www.empresariosagrupados.es/

= REPORT

+ TMA-CCWAUX-CS-CBT-0101

Cable diagram

F09_001_TK1

Cable ID	Cable Type	no. of conductors	cross-section	cable length	function text
=E1+TMA-CCWAUX-CS-CBT-0101-325W4	4x 0.25mm2	4	0,25		LUBRICATION BKI 101 e CABLE

function text	X-Ref	Connected to	Pin	conductor	Connected to	Pin	X-Ref
CAMERA CABLE WRAP LUBRICACION PINION 2	/325.5	+TMA-EL-CS-CBT-0105-X2_	4	**BK**	-325U2	BK	/325.5
=	/325.4	+TMA-EL-CS-CBT-0105-X2_	2	**BN**	-325U2	BN	/325.4
=	/325.5	+TMA-EL-CS-CBT-0105-X2_	8	**BU**	-325U2	BU	/325.5
=	/325.5	+TMA-EL-CS-CBT-0105-X2_	7	**WH**	-325U2	WH	/325.5

IK4 TEKNIKER Research Alliance

IK4 TEKNIKER
POLO TECNOLOGICO DE EIBAR
C/Iñaki Goenaga nº 5
20600 Eibar (Gipuzkoa) Spain
Tfno.:(+34) 943 206744
Fax: (+34) 943 202757
Web: www.tekniker.es

Date	23/02/2017						
No traducido	J.LÓPEZ	2.3	15/12/2017	JOSE MANUEL			
Realizado	jcastano	Revisión	Date	Name	Revisión	Date	Name

MCS Design Electrical Schematics
LSST TELESCOPE

Sustituye a: | Replaced by

Cable diagram
=E1+TMA-CCWAUX-CS-CBT-0101-325W4

Cliente: EMPRESARIOS AGRUPADOS
C/Magallanes, 3
28015 MADRID
91 3098000
http://www.empresariosagrupados.es/

= REPORT
+ TMA-CCWAUX-CS-CBT-0101

Cable diagram

F09_001_TK1

Cable ID	Cable Type	no. of conductors	cross-section	cable length	function text
=E1+TMA-CCWAUX-CS-CBT-0101-325W6	3x0,14mm2	3	0,14		emptying monitor cable

function text	X-Ref	Connected to	Pin	conductor	Connected to	Pin	X-Ref
CAMERA CABLE WRAP LUBRICACION PINION 2	/325.6	+TMA-EL-CS-CBT-0105-X2_	24	**BK**	-325U2	BK	/325.6
=	/325.6	+TMA-EL-CS-CBT-0105-X2_	15	**BN**	-325U2	BN	/325.6
=	/325.6	+TMA-EL-CS-CBT-0105-X2_	18	**BU**	-325U2	BU	/325.6

IK4 TEKNIKER Research Alliance

IK4 TEKNIKER
POLO TECNOLOGICO DE EIBAR
C/Iñaki Goenaga nº 5
20600 Eibar (Gipuzkoa) Spain
Tfno.:(+34) 943 206744
Fax: (+34) 943 202757
Web: www.tekniker.es

Date	23/02/2017						
No traducción	J.LÓPEZ	2.3	15/12/2017	JOSE MANUEL			
Realizado	jcastano	Revisión	Date	Name	Revisión	Date	Name

MCS Design Electrical Schematics

LSST TELESCOPE

Sustituye a: | Replaced by

Cable diagram
=E1+TMA-CCWAUX-CS-CBT-0101-325W6

Cliente: EMPRESARIOS AGRUPADOS
C/Magallanes, 3
28015 MADRID
91 3098000
http://www.empresariosagrupados.es/

= REPORT
+ TMA-CCWAUX-CS-CBT-0101

Customer

EMPRESARIOS AGRUPADOS

EMPRESARIOS AGRUPADOS
C/Magallanes, 3
28015 MADRID
ESPAÑA
91 3098000

http://www.empresariosagrupados.es/

Project:

3151_LSST
MCS Design Electrical Schematics
LSST TELESCOPE

REPORT
GENERAL REPORT

TMA_E
TELESCOPE STRUCTURE

Number of pages: 710

Made by:

IK4 TEKNIKER
Research Alliance

IK4-TEKNIKER
AVDA. OTAOLA 20
20600 Eibar (Gipuzkoa) Spain
Tfno. : (+34) 943 206744
Fax : (+34) 943 202757
Web: www.tekniker.es

Review	Review description	Date	Reviewed
2.3	VERSION INTERMEDIA PARA MONTAJE ASTURFEITO (SIN EVALUACIONES)	15/12/2017	JOSE MANUEL

Drew by: J.M.CASTAÑO

Reviewed: F.LÓPEZ

Date: 16/12/2015

Replaces:

Replaced by:

Cable diagram

F09_001_TK1

Cable ID	Cable Type	no. of conductors	cross-section	cable length	function text
=E1+TMA_E-108W1	RKG4200				Encoder Azimuth cable wrap 1

function text	X-Ref	Connected to	Pin	conductor	Connected to	Pin	X-Ref
	+TMA-AZ-CS-CBT-0001/108.5	+TMA-AZ-UC-AC2-X1		**e**	+TMA-AZ-CS-CBT-0001-105U3-X4.1	X4.1:E	+TMA-AZ-CS-CBT-0001/108.5

◁ 001

4001 ▷

IK4 TEKNIKER Research Alliance
IK4 TEKNIKER
POLO TECNOLOGICO DE EIBAR
C/Iñaki Goenaga nº 5
20600 Eibar (Gipuzkoa) Spain
Tfno.:(+34) 943 206744
Fax: (+34) 943 202757
Web: www.tekniker.es

Date	15/12/2017						
No traducido	JULIÓN LÓPEZ	2.3	15/12/2017	JOSE MANUEL			
Realizado	JOSE MANUEL	Revisión	Date	Name	Revisión	Date	Name

MCS Design Electrical Schematics
LSST TELESCOPE

Sustituye a: | Replaced by

Cable diagram =E1+TMA_E-108W1

Cliente: EMPRESARIOS AGRUPADOS
C/Magallanes, 3
28015 MADRID
91 3098000
http://www.empresariosagrupados.es/

= REPORT
+ TMA_E

Cable overview

F10_003A - TK

Cable designation	from	to	Cable type	Length	Function text
=E1-128AW1	=E1-128AU1	=E1-128BU1	RKH0111		KSM02-KSM02
=E1-128BW1	=E1-128BU1	=E1-128CU1	RKH0111		KSM02-KSM02
=E1-128CW1	=E1-128CU1	=E1-128DU1	RKH0111		KSM02-KSM02
=E1-128DAW1			MULTI_ETH		MULTI_ETH
=E1-128DW1	=E1+TMA-AZ-UC-EC1-X2	=E1+TMA-AZ-CS-CBT-0001-105U6	MULTI_ETH		MULTI_ETH
=E1-108W1	=E1+TMA-AZ-UC-AC4-X1	=E1+TMA-AZ-CS-CBT-0001-105U3-X4.1	RKG4200		Encoder Azimuth cable wrap 1
=E1-108W1A	=E1+TMA-PI-UC-AC1-X1	=E1-108M1-EN	RKG4200		Encoder Azimuth cable wrap 1
=E1-108W2	=E1+TMA-AZ-UC-AC4-X2	=E1+TMA-AZ-CS-CBT-0001-105U3-X5.1	RKL0050		Motor Azimuth cable wrap 1
=E1-108W2A	=E1+TMA-PI-UC-AC1-X2	=E1-108M1-PWR	RKL0050		Motor Azimuth cable wrap 1
=E1-109W1	=E1+TMA-AZ-UC-AC4-X3	=E1+TMA-AZ-CS-CBT-0001-105U3-X4.2	RKG4200		Encoder Azimuth cable wrap 2
=E1-109W1A	=E1+TMA-PI-UC-AC1-X3	=E1-109M1-EN	RKG4200		Encoder Azimuth cable wrap 2
=E1-109W2	=E1+TMA-AZ-UC-AC4-X4	=E1+TMA-AZ-CS-CBT-0001-105U3-X5.2	RKL0050		Motor azimuth cable wrap 2
=E1-109W2A	=E1+TMA-PI-UC-AC1-X4	=E1-109M1-PWR	RKL0050		Motor azimuth cable wrap 2

Cable overview

F10_003A - TK

Cable designation	from	to	Cable type	Length	Function text
=E1-112W1	=E1+TMA-AZ-UC-EC2-X1	=E1+TMA-AZ-CS-CBT-0001-105U4-X4.1	RKG4200		encoder camera cable wrap 1
=E1-112W1A	=E1+TMA-EL-UC-EC4-X1	=E1-112M1-EN	RKG4200		encoder camera cable wrap 1
=E1-112W2	=E1+TMA-AZ-UC-EC2-X2	=E1+TMA-AZ-CS-CBT-0001-105U4-X5.1	RKL0014		Motor camera cable wrap 1
=E1-112W2A	=E1+TMA-EL-UC-EC4-X2	=E1-112M1-PWR	RKL0050		Motor camera cable wrap 1
=E1-113W1	=E1+TMA-AZ-UC-EC2-X3	=E1+TMA-AZ-CS-CBT-0001-105U4-X4.2	RKG4200		encoder camera cable wrap 2
=E1-113W1A	=E1+TMA-EL-UC-EC4-X3	=E1-113M1-EN	RKG4200		encoder camera cable wrap 2
=E1-113W2	=E1+TMA-AZ-UC-EC2-X4	=E1+TMA-AZ-CS-CBT-0001-105U4-X5.2	RKL0014		Motor camera cable wrap 2
=E1-113W2A	=E1+TMA-EL-UC-EC4-X4	=E1-113M1-PWR	RKL0050		Motor camera cable wrap 2
=E1-119W1	=E1+TMA-AZ-UC-EC1-X1	=E1+TMA-AZ-CS-CBT-0001-105U5-X29.2	RKH0411		KCU02-KSM02
=E1-119W1A	=E1+TMA-EL-UC-EC3-X1	=E1-121U1-X103.1	RKH0411		KCU02-KSM02
=E1-120W1	=E1+TMA-AZ-CS-CBT-0001-105U6	=E1-129U1	RKH0411		KCU02-KSM02

Cable overview

F10_003A - TK

Cable designation	from	to	Cable type	Length	Function text
=E1-121W1	=E1-121U1	=E1-122U1	RKH0111		KSM02-KSM02
=E1-122W1	=E1-122U1	=E1-123U1	RKH0111		KSM02-KSM02
=E1-122W2	=E1-122X2	=E1-122S2	SHIELDED 3G1		BALANCING SYSTEM 1 LIMIT SWITCH -
=E1-122W3	=E1-122X1	=E1-122S1	SHIELDED 3G1		BALANCING 1 LIMIT SWITCH +
=E1-123W1	=E1-123U1	=E1-124U1	RKH0111		KSM02-KSM02
=E1-123W2	=E1-123X2	=E1-123S2	SHIELDED 3G1		BALANCING SYSTEM 2 LIMIT SWITCH -
=E1-123W3	=E1-123X1	=E1-123S1	SHIELDED 3G1		BALANCING SYSTEM 2 LIMIT SWITCH +
=E1-124W1	=E1-124U1	=E1-125U1	RKH0111		KSM02-KSM02
=E1-125W1	=E1-125U1	=E1-126U1	RKH0111		KSM02-KSM02
=E1-126W1	=E1-126U1	=E1-127U1	RKH0111		KSM02-KSM02
=E1-127W1	=E1-127U1	=E1-128U1	RKH0111		KSM02-KSM02
=E1-127W2	=E1-127X2	=E1-127S2	SHIELDED 3G1		BALANCING SYSTEM 3 LIMIT SWITCH -
=E1-127W3	=E1-127X1	=E1-127S1	SHIELDED 3G1		BALANCING SYSTEM 3 LIMIT SWITCH +
=E1-128W1	=E1-128AU1	=E1-128U1	RKH0111		KSM02-KSM02

Cable overview

F10_003A - TK

Cable designation	from	to	Cable type	Length	Function text
=E1-128W2	=E1-128X2	=E1-128S2	SHIELDED 3G1		BALANCING SYSTEM 4 LIMIT SWITCH -
=E1-128W3	=E1-128X1	=E1-128S1	SHIELDED 3G1		BALANCING SYSTEM 4 LIMIT SWITCH +
=E1-129W1	=E1-129U1	=E1-130U1	RKH0111		KSM02-KSM02
=E1-130W1	=E1-130U1	=E1-131U1	RKH0111		KSM02-KSM02
=E1-131W1	=E1-131U1	=E1-132U1	RKH0111		KSM02-KSM02
=E1-131W2	=E1-131X2	=E1-131S2	SHIELDED 3G1		ELEVATION LOCKING PINS 1 LIMIT SWITCH -
=E1-131W3	=E1-131X1	=E1-131S1	SHIELDED 3G1		ELEVATION LOCKING PINS 1 LIMIT SWITCH +
=E1-132W1	=E1-132U1	=E1-133U1	RKH0111		KSM02-KSM02
=E1-132W2	=E1-132X2	=E1-132S2	SHIELDED 3G1		ELEVATION LOCKING PINS 2 LIMIT SWITCH -
=E1-132W3	=E1-132X1	=E1-132S1	SHIELDED 3G1		ELEVATION LOCKING PINS 2 LIMIT SWITCH +
=E1-133W1	=E1-133U1	=E1-134U1	RKH0111		KSM02-KSM02
=E1-134W1	=E1+TMA-AZ-CS-CBT-0001-209A1	=E1-134U1	ETH CAT5e		MULTI_ETH
=E1-135W1	=E1-154M1-C2	=E1+PHASE-135U1-ETHERCAT	ETH CAT5e		ETHERCAT
=E1-136W1	=E1+TMA-AZ-CS-CBT-0001-X10	=E1+TMA-AZ-DR-CBT-0003-X1	Shielded 3x1mm2		STO AZIMUTH AZ01-AZ08 SECTIONS
=E1-136W2	=E1-136M1-C3	=E1-151M1-C2	ETH CAT5e		ETHERCAT MOTOR
=E1-136W3	=E1-136M1-C2	=E1-136M2-C3	ETH CAT5e		ETHERCAT MOTOR
=E1-136W4	=E1+TMA-AZ-CS-CBT-0001-220A40	=E1-136M1-C6	SHIELDED 4 WIRES PT100		AZ01 PT100

Cable overview

F10_003A - TK

Cable designation	from	to	Cable type	Length	Function text
=E1-136W5	=E1+TMA-AZ-CS-CBT-0001-220A40	=E1-136M2-C6	SHIELDED 4 WIRES PT100		AZ02 PT100
=E1-137W1	=E1-136M2-C2	=E1-137M1-C3	ETH CAT5e		ETHERCAT MOTOR
=E1-137W2	=E1-137M1-C2	=E1-137M2-C3	ETH CAT5e		ETHERCAT MOTOR
=E1-137W3	=E1+TMA-AZ-CS-CBT-0001-220A40	=E1-137M1-C6	SHIELDED 4 WIRES PT100		AZ03 PT100
=E1-137W4	=E1+TMA-AZ-CS-CBT-0001-220A40	=E1-137M2-C6	SHIELDED 4 WIRES PT100		AZ04 PT100
=E1-138W1	=E1+TMA-AZ-DR-CBT-0003-X1	=E1+TMA-AZ-DR-CBT-0004-X1	Shielded 2x1mm2		STO AZIMUTH AZ04-AZ05 SECTIONS
=E1-138W2	=E1-138M1-C3	=E1-138M2-C2	ETH CAT5e		ETHERCAT MOTOR
=E1-138W3	=E1-138M2-C3	=E1-139M1-C2	ETH CAT5e		ETHERCAT MOTOR
=E1-138W4	=E1+TMA-AZ-CS-CBT-0001-220A41	=E1-138M1-C6	SHIELDED 4 WIRES PT100		AZ05 PT100
=E1-138W5	=E1+TMA-AZ-CS-CBT-0001-220A41	=E1-138M2-C6	SHIELDED 4 WIRES PT100		AZ06 PT100
=E1-139W1	=E1-139M1-C3	=E1-139M2-C2	ETH CAT5e		ETHERCAT MOTOR
=E1-139W2	=E1-139B1-C2	=E1-139M2-C3	ETH CAT5e		ETHERCAT MOTOR
=E1-139W3	=E1-139B1-C3	=E1-143M2-C2	ETH CAT5e		ETHERCAT MOTOR
=E1-139W4	=E1+TMA-AZ-CS-CBT-0001-220A41	=E1-139M1-C6	SHIELDED 4 WIRES PT100		AZ07 PT100
=E1-139W5	=E1+TMA-AZ-CS-CBT-0001-220A41	=E1-139M2-C6	SHIELDED 4 WIRES PT100		AZ08 PT100
=E1-140W1	=E1+TMA-AZ-CS-CBT-0001-X10	=E1+TMA-AZ-DR-CBT-0005-X1	3x1 Shielded		STO AZIMUTH AZ09-AZ16 SECTIONS
=E1-140W2	=E1-140M1-C3	=E1-140M2-C2	ETH CAT5e		ETHERCAT MOTOR

Cable overview

F10_003A - TK

Cable designation	from	to	Cable type	Length	Function text
=E1-140W3	=E1-140M2-C3	=E1-141M1-C2	ETH CAT5e		ETHERCAT MOTOR
=E1-140W4	=E1+TMA-AZ-CS-CBT-0101-220A40	=E1-140M1-C6	SHIELDED 4 WIRES PT100		AZ09 PT100
=E1-140W5	=E1+TMA-AZ-CS-CBT-0101-220A40	=E1-140M2-C6	SHIELDED 4 WIRES PT100		AZ10 PT100
=E1-141W1	=E1-141M1-C3	=E1-141M2-C2	ETH CAT5e		ETHERCAT MOTOR
=E1-141W2	=E1-137M2-C2	=E1-141M2-C3	ETH CAT5e		ETHERCAT MOTOR
=E1-141W3	=E1+TMA-AZ-CS-CBT-0101-220A40	=E1-141M1-C6	SHIELDED 4 WIRES PT100		AZ11 PT100
=E1-141W4	=E1+TMA-AZ-CS-CBT-0101-220A40	=E1-141M2-C6	SHIELDED 4 WIRES PT100		AZ12 PT100
=E1-142W1	=E1+TMA-AZ-DR-CBT-0005-X1	=E1+TMA-AZ-DR-CBT-0006-X1	Shielded 2x1mm2		STO AZIMUTH AZ12-AZ13 SECTIONS
=E1-142W2	=E1-142M1-C3	=E1+PHASE-135U1-ETHERCAT	ETH CAT5e		ETHERCAT MOTOR
=E1-142W3	=E1-142M1-C2	=E1-142M2-C3	Ethercat		ETHERCAT MOTOR
=E1-142W4	=E1+TMA-AZ-CS-CBT-0101-220A41	=E1-142M1-C6	SHIELDED 4 WIRES PT100		AZ13 PT100
=E1-142W5	=E1+TMA-AZ-CS-CBT-0101-220A41	=E1-142M2-C6	SHIELDED 4 WIRES PT100		AZ14 PT100
=E1-143W1	=E1-142M2-C2	=E1-143M1-C3	ETH CAT5e		ETHERCAT MOTOR
=E1-143W2	=E1-143M1-C2	=E1-143M2-C3	Ethercat		ETHERCAT MOTOR
=E1-143W3	=E1+TMA-AZ-CS-CBT-0101-220A41	=E1-143M1-C6	SHIELDED 4 WIRES PT100		AZ15 PT100
=E1-143W4	=E1+TMA-AZ-CS-CBT-0101-220A41	=E1-143M2-C6	SHIELDED 4 WIRES PT100		AZ16 PT100
=E1-150W1	=E1+TMA-AZ-CS-CBT-0001-X10	=E1+TMA-AZ-DR-CBT-0007-X1	Shielded 3x1mm2		STO ELEVATION EL01A-EL03B SECTIONS

Cable overview

F10_003A - TK

Cable designation	from	to	Cable type	Length	Function text
	=E1+TMA-AZ-CS-CBT-0001-150W1-SH				
=E1-150W2	=E1-150M1-C3	=E1-150M2-C2	ETH CAT5e		ETHERCAT MOTOR
=E1-150W3	=E1-150M2-C3	=E1-152B1-C2	ETH CAT5e		ETHERCAT MOTOR
=E1-150W4	=E1+TMA-AZ-CS-CBT-0001-220A42	=E1-150M1-C6	SHIELDED 4 WIRES PT100		EL01 PT100
=E1-150W5	=E1+TMA-AZ-CS-CBT-0001-220A42	=E1-150M2-C6	SHIELDED 4 WIRES PT100		EL01B PT100
=E1-151W1	=E1-151M1-C3	=E1-151M2-C2	ETH CAT5e		ETHERCAT MOTOR
=E1-151W2	=E1-150M1-C2	=E1-151M2-C3	ETH CAT5e		ETHERCAT MOTOR
=E1-151W3	=E1+TMA-AZ-CS-CBT-0001-220A42	=E1-151M1-C6	SHIELDED 4 WIRES PT100		EL02A PT100
=E1-151W4	=E1+TMA-AZ-CS-CBT-0001-220A42	=E1-151M2-C6	SHIELDED 4 WIRES PT100		EL02B PT100
=E1-152W1	=E1-152M1-C3	=E1-152M2-C2	ETH CAT5e		ETHERCAT MOTOR
=E1-152W2	=E1+TMA-AZ-CS-CBT-0001-210A1-ETH	=E1-152M2-C3	ETH CAT5e		ETHERCAT MOTOR
=E1-152W3	=E1-152B1-C3	=E1-152M1-C2	ETH CAT5e		ETHERCAT MOTOR
=E1-152W4	=E1+TMA-AZ-CS-CBT-0001-220A43	=E1-152M1-C6	SHIELDED 4 WIRES PT100		EL03A PT100
=E1-152W5	=E1+TMA-AZ-CS-CBT-0001-220A43	=E1-152M2-C6	SHIELDED 4 WIRES PT100		EL03B PT100
=E1-153W1	=E1+TMA-AZ-CS-CBT-0001-X10	=E1+TMA-AZ-DR-CBT-0008-X1	shielded 3x1		STO ELEVATION EL04A-EL06B SECTIONS
=E1-153W2	=E1-153M1-C3	=E1-153M2-C2	ETH CAT5e		ETHERCAT MOTOR
=E1-153W3	=E1-153M2-C3	=E1-155B1-C2	ETH CAT5e		ETHERCAT MOTOR

Cable overview

F10_003A - TK

Cable designation	from	to	Cable type	Length	Function text
=E1-153W4	=E1+TMA-AZ-CS-CBT-0101-220A42	=E1-153M1-C6	SHIELDED 4 WIRES PT100		EL04A PT100
=E1-153W5	=E1+TMA-AZ-CS-CBT-0101-220A42	=E1-153M2-C6	SHIELDED 4 WIRES PT100		EL04B PT100
=E1-154W1	=E1-154M1-C3	=E1-154M2-C2	ETH CAT5e		ETHERCAT MOTOR
=E1-154W2	=E1-153M1-C2	=E1-154M2-C3	ETH CAT5e		ETHERCAT MOTOR
=E1-154W3	=E1+TMA-AZ-CS-CBT-0101-220A42	=E1-154M1-C6	SHIELDED 4 WIRES PT100		EL05A PT100
=E1-154W4	=E1+TMA-AZ-CS-CBT-0101-220A42	=E1-154M2-C6	SHIELDED 4 WIRES PT100		EL05B PT100
=E1-155W1	=E1-155M1-C3	=E1-155M2-C2	ETH CAT5e		ETHERCAT MOTOR
=E1-155W2	=E1-140M1-C2	=E1-155M2-C3	ETH CAT5e		ETHERCAT MOTOR
=E1-155W3	=E1-155B1-C3	=E1-155M1-C2	ETH CAT5e		ETHERCAT MOTOR
=E1-155W4	=E1+TMA-AZ-CS-CBT-0101-220A43	=E1-155M1-C6	SHIELDED 4 WIRES PT100		EL06A PT100
=E1-155W5	=E1+TMA-AZ-CS-CBT-0101-220A43	=E1-155M2-C6	SHIELDED 4 WIRES PT100		EL06B PT100
=E1-205W1	=E1+TMA-AZ-CS-CBT-0001-201A4-ETH1	=E1-138M1-C2	ETH CAT5e		ETHERCAT
=E1-205W3	=E1+TMA-AZ-UC-EC1-X6	=E1+TMA-AZ-CS-CBT-0001-201A5-ETH1	ETH CAT5e		ETHERCAT
=E1-205W3A	=E1+TMA-EL-UC-EC3-X6	=E1+TMA-EL-CS-CBT-0101-220A1	ETHERHET CAT5e		ETHERCAT
=E1-206W1	=E1+TMA-AZ-UC-AC4-X5	=E1+TMA-AZ-CS-CBT-0001-206A1-DP1	ETH CAT5e		CONVERTIDOR FO-ETH MMCS
=E1-206W1A	=E1+TMA-PI-UC-AC1-X5	=E1+TMA-PI-CS-CBT-0101-209U1-X2	ETH CAT5e		FO-ETH MCCS CONVERTER
=E1-206W2	=E1+TMA-AZ-UC-AC4-X6	=E1+TMA-AZ-CS-CBT-0001-206A1-ETH	ETH CAT5e		FO-ETH SKF CONVERTER
=E1-206W2A	=E1+TMA-PI-UC-AC1-X6	=E1+TMA-PI-CS-CBT-0101-210U1-X2	ETH CAT5e		FO-ETH SKF CONVERTER

Cable overview

F10_003A - TK

Cable designation	from	to	Cable type	Length	Function text
=E1-206W3	=E1+TMA-AZ-UC-EC2-X5	=E1+TMA-AZ-CS-CBT-0001-206A1-ETH	CAT 5e		ETHERNET TEA
=E1-206W3A	=E1+TMA-EL-UC-EC4-X5	=E1+TEA-ETH	CAT 5e		ETHERNET TEA
=E1-206W4	=E1+TMA-AZ-CS-CBT-0001-206A1-ETH	=E1+PHASE-135U1-ETHERNET	ETH CAT5e		ETHERNET PHASE
=E1-221W2	=E1+TMA-AZ-UC-AC4-X7	=E1+TMA-AZ-CS-CBT-0001-220A1	ETH CAT5e		ETHERCAT
=E1-221W2A	=E1+TMA-PI-UC-AC1-X7	=E1+TMA-PI-CS-CBT-0101-220A1	ETHERNET CAT5e		ETHERCAT
=E1-221W3	=E1+TMA-AZ-UC-AC4-X10	=E1+TMA-AZ-CS-CBT-0101-220A1	ETH CAT5e		ETHERCAT
=E1-221W3A	=E1+TMA-PI-UC-AC1-X10	=E1+TMA-PI-CS-CBT-0101-220A1	ETH CAT5e		ETHERCAT
=E1-221W4	=E1+TMA-AZ-UC-EC2-X9	=E1+TMA-AZ-CS-CBT-0101-220A2	ETHERNET CAT5e		ETHERCAT
=E1-221W4A	=E1+TMA-EL-UC-EC4-X9	=E1+TMA-EL-CS-CBT-0102-220A1	ETHERNET CAT5e		ETHERCAT
=E1-221W5	=E1+TMA-EL-CS-CBT-0101-220A1	=E1+TMA-EL-CS-CBT-0102-220A1	ETH CAT5e		ETHERCAT
=E1-223W1	=E1+TMA-EL-CS-CBT-0101-220A10	=E1-S1	shielded 2x1		MC LOCK EL+ PUSHBUTTON
=E1-223W2	=E1+TMA-EL-CS-CBT-0102-220A10	=E1-S2	shielded 2x1		MC LOCK EL- PUSHBUTTON
=E1-255W1	=E1+TMA-AZ-CS-CBT-0102-255U1-X3		ETH CAT 5e		Handheld ETH
=E1-255W2	=E1+TMA-AZ-CS-CBT-0103-255U1-X3		ETH CAT 5e		Handheld ETH
=E1-255W3	=E1+TMA-AZ-UC-EC1-X3	=E1+TMA-AZ-CS-CBT-0001-206A2-ETH	ETH CAT5a		Handheld ETH
=E1-255W3A	=E1+TMA-EL-CS-CBT-0103-255U1-X3		ETH CAT 5e		Handheld ETH
=E1-255W4	=E1+TMA-AZ-UC-EC2-X6	=E1+TMA-AZ-CS-CBT-0001-206A2-ETH	ETH CAT5a		Handheld ETH
=E1-255W4A	=E1+TMA-EL-CS-CBT-0104-255U1-X3		ETH CAT5e		Handheld ETH
=E1-255W5	=E1+TMA-AZ-CS-CBT-0001-X10	=E1+TMA-AZ-CS-CBT-0102-255U1-X1	LiY-CY 14x1		Handheld Signals
=E1-255W6	=E1+TMA-AZ-CS-CBT-0001-X10	=E1+TMA-AZ-CS-CBT-0103-255U1-X1	LiY-CY 14x1		Handheld Signals

Cable overview

F10_003A - TK

Cable designation	from	to	Cable type	Length	Function text
=E1-255W7	=E1+TMA-EL-CS-CBT-0101-X10	=E1+TMA-EL-CS-CBT-0103-255U1-X1	Shielded LiY-CY 12x1		Handheld Signals
=E1-255W8	=E1+TMA-EL-CS-CBT-0102-X10	=E1+TMA-EL-CS-CBT-0104-255U1-X1	shielded LiY-CY 12x1		Handheld Signals
=E1-301W1	=E1+TMA-AZ-CS-CBT-0001-240X1	=E1+TMA-AZ-CS-CBT-0001-301X1	encoder Cable		AZIMUTH LINEAR ENCODER 1
=E1-301W2	=E1+TMA-AZ-CS-CBT-0001-240X2	=E1+TMA-AZ-CS-CBT-0001-301X2	encoder Cable		AZIMUTH LINEAR ENCODER 2
=E1-302W1	=E1+TMA-AZ-CS-CBT-0001-302X1	=E1+TMA-AZ-CS-CBT-0001-240X3	encoder Cable		AZIMUTH LINEAR ENCODER 3
=E1-302W2	=E1+TMA-AZ-CS-CBT-0001-302X2	=E1+TMA-AZ-CS-CBT-0001-240X4	encoder Cable		AZIMUTH LINEAR ENCODER 4
=E1-303W1	=E1+TMA-AZ-CS-CBT-0001-303X1	=E1+TMA-AZ-CS-CBT-0001-240X5	encoder Cable		ELEVATION LINEAR ENCODER 1
=E1-303W2	=E1+TMA-AZ-CS-CBT-0001-303X2	=E1+TMA-AZ-CS-CBT-0001-240X6	encoder Cable		ELEVATION LINEAR ENCODER 2
=E1-304W1	=E1+TMA-AZ-CS-CBT-0001-304X1	=E1+TMA-AZ-CS-CBT-0001-240X7	encoder Cable		ELEVATION LINEAR ENCODER 3
=E1-304W2	=E1+TMA-AZ-CS-CBT-0001-304X2	=E1+TMA-AZ-CS-CBT-0001-240X8	encoder Cable		ELEVATION LINEAR ENCODER 4
=E1-320W3	=E1+TMA-PI-CS-CBT-0101-220A10	=E1-320S1	SHIELDED 3G1		Azimut Positive Fixed Directional Limit Switch
=E1-320W4	=E1+TMA-PI-CS-CBT-0101-220A10	=E1-320S2	SHIELDED 3G1		Azimut Negative Fixed Directional Limit Switch
=E1-320W5	=E1+TMA-EL-CS-CBT-0101-320X1F	=E1+TMA-EL-CS-CBT-0101-X10	SHIELDED 16G1,5		CCW SIGNALS INTERFACE
=E1-320W7	=E1+TMA-AZ-CS-CBT-0101-X12	=E1-320X1	LiCYC 2x0,34		AZCW- IN COOLING CIRCUIT PRESSURE
=E1-320W8	=E1+TMA-AZ-CS-CBT-0101-X12	=E1-320X2	LiCYC 2x0,34		AZCW- OUT COOLING CIRCUIT PRESSURE
=E1-320W9	=E1+TMA-EL-CS-CBT-0102-X12	=E1-320X3	LiCYC 2x0,34		M1-M3 COOLING CIRCUIT IN PRESSURE
=E1-320W10	=E1+TMA-EL-CS-CBT-0102-X12	=E1-320X4	LiCYC 2x0,34		M1-M3 COOLING CIRCUIT OUT PRESSURE

Cable overview

F10_003A - TK

Cable designation	from	to	Cable type	Length	Function text
=E1-320W11	=E1+TMA-EL-CS-CBT-0102-X12	=E1-320X5	LiCYC 2x0,34		EL1 CABINET COOLING CIRCUIT OUT PRESSURE
=E1-320W12	=E1+TMA-EL-CS-CBT-0102-X12	=E1-320X6	LiCYC 2x0,34		EL1 CABINET COOLING CIRCUIT OUT PRESSURE
=E1-321W1	=E1+TMA-AZ-CS-CBT-0001-220A12	=E1-321S1	SHIELDED 3G1		Elevation Positive Operation Directional Limit Switch
=E1-321W2	=E1+TMA-AZ-CS-CBT-0101-220A10	=E1-321S2	SHIELDED 3G1		Elevation Negative Operation Directional Limit Switch
=E1-321W3	=E1+TMA-AZ-CS-CBT-0001-220A12	=E1-321S3	SHIELDED 3G1		Elevation Positive Fixed Directional Limit Switch
=E1-321W4	=E1+TMA-AZ-CS-CBT-0101-220A10	=E1-321S4	SHIELDED 3G1		Elevation Negative Fixed Directional Limit Switch
=E1-321W5	=E1+TMA-AZ-CS-CBT-0101-X12	=E1-321X1	LiCYC 2x0,34		CBCC GW OUT COOLING CIRCUIT PRESSURE
=E1-321W6	=E1+TMA-AZ-CS-CBT-0101-X12	=E1-321X2	LiCYC 2x0,34		PMC PHASE CABINET COOLING CIRCUIT PRESSURE
=E1-321W7	=E1+TMA-AZ-CS-CBT-0101-X12	=E1-321X3	LiCYC 2x0,34		CAMERA OUT COOLING CIRCUIT PRESSURE
=E1-322W3	=E1+TMA-AZ-CS-CBT-0101-X12	=E1-322X1	LiCYC 2x0,34		AZ 17-24 DRIVERS COOLING CIRCUIT OUT PRESSURE
=E1-322W4	=E1+TMA-AZ-CS-CBT-0101-X12	=E1-322X2	LiCYC 2x0,34		MCS AZ IO CABINET COOLING OUTLET PRESSURE
=E1-322W5	=E1+TMA-AZ-CS-CBT-0101-X12	=E1-322X3	LiCYC 2x0,34		OSS EL BEARING IO -X COOLING OUTLET PRESSURE
=E1-323W1	=E1+TMA-AZ-CS-CBT-0101-X12	=E1-323X1	LiCYC 2x0,34		AZ25-26 DRIVERS OUT COOLING CIRCUIT PRESSURE
=E1-323W2	=E1+TMA-AZ-CS-CBT-0101-X12	=E1-323X2	LiCYC 2x0,34		AZ27-28 DRIVERS OUT COOLING CIRCUIT PRESSURE

Cable overview

F10_003A - TK

Cable designation	from	to	Cable type	Length	Function text
=E1-323W3	=E1+TMA-AZ-CS-CBT-0101-X12	=E1-323X3	LiCYC 2x0,34		AZ29-30 DRIVERS OUT COOLING CIRCUIT PRESSURE
=E1-323W4	=E1+TMA-AZ-CS-CBT-0101-X12	=E1-323X4	LiCYC 2x0,34		AZ31-32 DRIVERS OUT COOLING CIRCUIT PRESSURE
=E1-324W1	=E1+TMA-AZ-CS-CBT-0101-X12	=E1-324X1	LiCYC 2x0,34		EL7-8 DRIVERS OUT COOLING CIRCUIT PRESSURE
=E1-324W2	=E1+TMA-AZ-CS-CBT-0101-X12	=E1-324X2	LiCYC 2x0,34		EL9-10 DRIVERS OUT COOLING CIRCUIT PRESSURE
=E1-324W3	=E1+TMA-AZ-CS-CBT-0101-X12	=E1-324X3	LiCYC 2x0,34		EL11-12 DRIVERS OUT COOLING CIRCUIT PRESSURE
=E1-325W13	=E1+TMA-AZ-CS-CBT-0101-X12	=E1-325X17	LiCYC 2x0,34		GW EL CW COOLING CIRCUIT IN PRESSURE
=E1-325W14	=E1+TMA-AZ-CS-CBT-0101-X12	=E1-325X18	LiCYC 2x0,34		GW EL CW COOLING CIRCUIT OUT PRESSURE
=E1-327W1	=E1+TMA-AZ-CS-CBT-0101-X12	=E1-327X1	LiCYC 2x0,34		AZCW- AIR OUT PRESSURE
=E1-327W2	=E1+TMA-PI-CS-CBT-0101-X12	=E1-327X2	LiCYC 2x0,34		AZCW compressed air inlet pressure
=E1-327W3	=E1+TMA-PI-CS-CBT-0101-X12	=E1-327X3	LiCYC 2x0,34		AZCW service compressed air inlet temperature
=E1-328W1	=E1+TMA-PI-CS-CBT-0101-X12	=E1-328X1	LiCYC 2x0,34		SKF pressure inlet 1
=E1-328W2	=E1+TMA-PI-CS-CBT-0101-X12	=E1-328X2	LiCYC 2x0,34		SKF pressure inlet 2

Cable overview

F10_003A - TK

Cable designation	from	to	Cable type	Length	Function text
=E1-330W1	=E1+TMA-AZ-CS-CBT-0001-330XJ1F	=E1+TMA-AZ-CS-CBT-0001-X10	SHIELDED LiCYC 5x0,34		LVDT AZIMUTH CABLE WRAP
=E1-330W2	=E1+TMA-AZ-CS-CBT-0101-X10	=E1+TMA-AZ-DR-CBT-0001-X20	SHIELDED 9G1		PHASE MAIN POWER SIGNALS
=E1-330W3	=E1+TMA-AZ-CS-CBT-0101-X10	=E1+TMA-AZ-DR-CBT-0001-X	4x1 Shielded		TMA IS Emergency Stop
=E1-331W1	=E1+TMA-AZ-DR-CBT-0002-X6	=E1+TMA-AZ-CS-CBT-0101-220A10	SHIELDED 4G1		CAPACITOR CONTROL SIGNALS
=E1-332W1	=E1+TMA-AZ-DR-CPB-0001-X3	=E1+TMA-AZ-CS-CBT-0101-220A11	SHIELDED 7G1		CAPACITOR CABINET 1 SIGNALS
=E1-333W1	=E1+TMA-AZ-DR-CPB-0002-X3	=E1+TMA-AZ-CS-CBT-0101-220A11	SHIELDED 7G1		CAPACITOR CABINET 2 SIGNALS
=E1-334W1	=E1+TMA-AZ-DR-CPB-0003-X3	=E1+TMA-AZ-CS-CBT-0101-220A11	SHIELDED 7G1		CAPACITOR CABINET 3 SIGNALS
=E1-335W1	=E1+TMA-AZ-CS-CBT-0001-X12	=E1-335X1	LiCYC 2x0,34		AZCW+ IN COOLING CIRCUIT PRESSURE

Cable overview

F10_003A - TK

Cable designation	from	to	Cable type	Length	Function text
=E1-335W2	=E1+TMA-AZ-CS-CBT-0001-X12	=E1-335X2	LiCYC 2x0,34		AZCW+ OUT COOLING CIRCUIT PRESSURE
=E1-335W3	=E1+TMA-AZ-DR-CPB-0004-X3	=E1+TMA-AZ-CS-CBT-0101-220A12	SHIELDED 7G1		CAPACITOR CABINET 4 SIGNALS
=E1-335W4	=E1+TMA-PI-CS-CBT-0101-X12	=E1-335X3	LiCYC 2x0,34		AZCW cooling circuit inlet pressure
=E1-335W5	=E1+TMA-PI-CS-CBT-0101-X12	=E1-335X4	LiCYC 2x0,34		AZCW cooling circuit outlet pressure
=E1-336W1	=E1+TMA-AZ-CS-CBT-0001-X12	=E1-336X1	LiCYC 2x0,34		AZ1-8 DRIVERS OUT COOLING CIRCUIT PRESSURE
=E1-336W2	=E1+TMA-AZ-CS-CBT-0001-X12	=E1-336X2	LiCYC 2x0,34		OSS AZIMUTH IO CABINET OUTLET PRESSURE +X
=E1-336W3	=E1+TMA-AZ-CS-CBT-0001-X12	=E1-336X3	LiCYC 2x0,34		OSS ELEVATION IO CABINET OUTLET PRESSURE +X
=E1-336W5	=E1+TMA-AZ-DR-CPB-0005-X3	=E1+TMA-AZ-CS-CBT-0101-220A12	SHIELDED 7G1		CAPACITOR CABINET 5 SIGNALS
=E1-337W1	=E1+TMA-AZ-CS-CBT-0001-X12	=E1-337X1	LiCYC 2x0,34		AZ 9-16 DRIVERS COOLING CIRCUIT OUT PRESSURE
=E1-337W2	=E1+TMA-AZ-CS-CBT-0001-X12	=E1-337X2	LiCYC 2x0,34		COMPRESORS MODULE COOLING CIRCUIT OUT PRESSURE

Cable overview

F10_003A - TK

Cable designation	from	to	Cable type	Length	Function text
=E1-337W3	=E1+TMA-AZ-CS-CBT-0001-X12	=E1-337X3	LiCYC 2x0,34		AZ DYNALEN SUPPLY PRESSURE
=E1-337W4	=E1+TMA-AZ-CS-CBT-0001-X12	=E1-337X4	LiCYC 2x0,34		AZ DYNALEN RETURN PRESSURE
=E1-337W5	=E1+TMA-AZ-DR-CPB-0006-X3	=E1+TMA-AZ-CS-CBT-0101-220A12	SHIELDED 7G1		CAPACITOR CABINET 6 SIGNALS
=E1-338W1	=E1+TMA-AZ-CS-CBT-0001-X12	=E1-338X1	LiCYC 2x0,34		OSS ELEVATION IO CABINET OUTLET PRESSURE +X
=E1-338W4	=E1+TMA-AZ-DR-CPB-0007-X3	=E1+TMA-AZ-CS-CBT-0101-220A13	SHIELDED 7G1		CAPACITOR CABINET 7 SIGNALS
=E1-339W1	=E1+TMA-AZ-CS-CBT-0001-X12	=E1-339X1	LiCYC 2x0,34		MCC CABINET OUT COOLING CIRCUIT PRESSURE
=E1-339W2	=E1+TMA-AZ-CS-CBT-0001-X12	=E1-339X2	LiCYC 2x0,34		AZ PANEL OUT COOLING CIRCUIT PRESSURE
=E1-339W3	=E1+TMA-AZ-DR-CPB-0008-X3	=E1+TMA-AZ-CS-CBT-0101-220A13	SHIELDED 7G1		CAPACITOR CABINET 8 SIGNALS
=E1-340W1	=E1+TMA-AZ-CS-CBT-0001-X12	=E1-340B7	LiCYC 2x0,34		AZ DYNALEN SUPPLY TEMPERATURE

Cable overview

F10_003A - TK

Cable designation	from	to	Cable type	Length	Function text
=E1-340W2	=E1+TMA-AZ-CS-CBT-0001-X12	=E1-340B8	LiCYC 2x0,34		AZ DYNALEN RETURN TEMPERATURE
=E1-340W3	=E1+TMA-EL-CS-CBT-0101-X12	=E1-340X3	LiCYC 2x0,34		EL CW COOLING CIRCUIT OUT PRESSURE
=E1-340W4	=E1+TMA-EL-CS-CBT-0101-X12	=E1-340X4	LiCYC 2x0,34		EL CW COOLING CIRCUIT IN PRESSURE
=E1-340W5	=E1+TMA-EL-CS-CBT-0101-X12	=E1-340X5	LiCYC 2x0,34		EL CCW COOLING CIRCUIT IN PRESSURE
=E1-340W6	=E1+TMA-EL-CS-CBT-0101-X12	=E1-340X6	LiCYC 2x0,34		EL CCW COOLING CIRCUIT OUT PRESSURE
=E1-341W1	=E1+TMA-EL-CS-CBT-0101-X12	=E1-341X1	LiCYC 2x0,34		CHILLER COOLING CIRCUIT OUT PRESSURE
=E1-341W2	=E1+TMA-EL-CS-CBT-0101-X12	=E1-341X2	LiCYC 2x0,34		CPM-005 COOLING CIRCUIT PRESSURE
=E1-345W1	=E1+TMA-AZ-CS-CBT-0001-X12	=E1-345X1	LiCYC 2x0,34		AZCW+ AIR OUT PRESSURE
=E1-350W1	=E1+TMA-AZ-CS-CBT-0001-X12	=E1-350B1	LiCYC 2x0,34		AZCW+ IN COOLING CIRCUIT TEMPERATURE
=E1-350W2	=E1+TMA-AZ-CS-CBT-0001-X12	=E1-350B2	LiCYC 2x0,34		AZCW+ OUT COOLING CIRCUIT TEMPERATURE
=E1-350W3	=E1+TMA-AZ-CS-CBT-0101-X12	=E1-350B3	LiCYC 2x0,34		AZCW- COOLING CIRCUIT IN TEMPERATURE
=E1-350W4	=E1+TMA-AZ-CS-CBT-0101-X12	=E1-350B4	LiCYC 2x0,34		AZCW-OUT COOLING CIRCUIT TEMPERATURE

Cable overview

F10_003A - TK

Cable designation	from	to	Cable type	Length	Function text
=E1-350W5	=E1+TMA-EL-CS-CBT-0101-X12	=E1-350B5	LiCYC 2x0,34		CCW COOLING CIRCUIT OUT TEMPERATURE
=E1-350W6	=E1+TMA-EL-CS-CBT-0101-X12	=E1-350B6	LiCYC 2x0,34		CHILLER COOLING CIRCUIT OUT TEMPERATURE
=E1-350W7	=E1+TMA-EL-CS-CBT-0102-X12	=E1-350B7	LiCYC 2x0,34		M1 M3 COOLING CIRCUIT OUT TEMPERATURE
=E1-350W8	=E1+TMA-PI-CS-CBT-0101-X12	=E1-350B8	LiCYC 2x0,34		AZCW compressed air inlet temperature
=E1-350W9	=E1+TMA-PI-CS-CBT-0101-X12	=E1-350B9	LiCYC 2x0,34		AZCW service compressed air inlet temperature
=E1-351W1	=E1+TMA-PI-CS-CBT-0101-X12	=E1-351B1	LiCYC 2x0,34		SKF temperature inlet 1
=E1-351W2	=E1+TMA-PI-CS-CBT-0101-X12	=E1-351B2	LiCYC 2x0,34		SKF temperature inlet 2
=E1-352W1	=E1+TMA-PI-CS-CBT-0101-X12	=E1-352B1	LiCYC 2x0,34		AZCW cooling circuit inlet temeperature
=E1-352W2	=E1+TMA-PI-CS-CBT-0101-X12	=E1-352B2	LiCYC 2x0,34		AZCW cooling circuit outlet temeperature
=E1-353W1	=E1+TMA-PI-CS-CBT-0101-X10	=E1+TMA-PI-PD-CBT-0001-353K1	SHIELDED PAAR 7x2x0,75		MAIN PANEL SIGNALS
=E1-353W2	=E1+TMA-AZ-CS-CBT-0001-X10	=E1+TMA-AZ-PD-CBT-0001-K1	SHIELDED 7x1		AZIMUTH PANEL SIGNALS

IK4 TEKNIKER Research Alliance
IK4-TEKNIKER
AVDA. OTAOLA 20
20600 Eibar (Gipuzkoa) Spain
Tfno.:(+34) 943 206744
Fax: (+34) 943 202757
Web: www.tekniker.es

Date	23/02/2017							
Reviewed	F.LÓPEZ	2.3	15/12/2017	JOSE MANUEL				
Drew by	jcastano	Review	Date	Name	Review	Date	Name	

3151_LSST
MCS Design Electrical Schematics
LSST TELESCOPE
Replaces
Replaced by

Cable overview : =E1+TMA_E-350W5 - =E1+TMA_E-353W2

Customer:
EMPRESARIOS AGRUPADOS
C/Magallanes, 3
28015 MADRID
91 3098000
http://www.empresariosagrupados.es/

= REPORT
+ TMA_E

Cable overview

F10_003A - TK

Cable designation	from	to	Cable type	Length	Function text
=E1-353W3	=E1+TMA-EL-CS-CBT-0101-X10	=E1+TMA-EL-PD-CBT-0001-K1	SHIELDED 7x1		ELEVATION +X PANEL SIGNALS
=E1-353W4	=E1+TMA-EL-CS-CBT-0102-X10	=E1+TMA-EL-PD-CBT-0002-K1	SHIELDED 7x1		ELEVATION -X PANEL SIGNALS
=E1-355W1	=E1+TMA-EL-CS-CBT-0101-X12	=E1-355X1	LiCYC 2x0,34		ECW+X compressed air outlet pressure
=E1-355W2	=E1+TMA-EL-CS-CBT-0102-X12	=E1-355X2	LiCYC 2x0,34		ECW-X compressed air outlet pressure
=E1-355W3	=E1+TMA-AZ-CS-CBT-0001-X13	=E1-355B3	ENCODER		ELEVATION ENCODER
=E1-355W4	=E1+TMA-PI-CS-CBT-0101-X13	=E1-355B4	ENCODER		AZIMUTH ENCODER
=E1-501W1	=E1+TMA-AZ-UC-AC4-X8	=E1+TMA-AZ-CS-CBT-0001-501A1-P8	ETH CAT5e		ETHERNET PILZ SWITCH PIER
=E1-501W1A	=E1+TMA-PI-UC-AC1-X8	=E1+TMA-PI-CS-CBT-0101-501A1-P8	ETH CAT5e		ETHERNET PILZ SWITCH PIER
=E1-501W2	=E1+TMA-AZ-UC-EC1-X4	=E1+TMA-AZ-CS-CBT-0001-501A1-P8	ETH CAT5e		ETHERNET PILZ EL1
=E1-501W2A	=E1+TMA-EL-UC-EC3-X4	=E1+TMA-EL-CS-CBT-0101-500A1	ETH CAT5e		ETHERNET PILZ EL1
=E1-501W3	=E1+TMA-AZ-UC-EC2-X7	=E1+TMA-AZ-CS-CBT-0001-501A1-P8	ETH CAT5e		ETHERNET PILZ EL2
=E1-501W3A	=E1+TMA-EL-UC-EC4-X7	=E1+TMA-EL-CS-CBT-0102-500A1	ETH CAT5e		ETHERNET PILZ EL2
=E1-501W4	=E1+TMA-AZ-CS-CBT-0001-501A1-P8	=E1+TMA-AZ-CS-CBT-0101-500A1	ETH CAT5e		ETHERNET PILZ AZ
=E1-510W1	=E1+TMA-AZ-CS-CBT-0001-500A10	=E1-510S2	shielded 4x1mm2		TMA azimuth area (+X) (beam 1) ETPB
=E1-510W2	=E1+TMA-AZ-DR-CBT-0001-X8	=E1+TMA-AZ-CS-CBT-0101-500A10	SHIELDED 4x1mm2		Phase Emergency Stop
=E1-510W3	=E1+TMA-AZ-CS-CBT-0101-500A10	=E1-510S3	SHIELDED 4x1mm2		TMA azimuth area (-X) (beam 1) ETPB

Cable overview

F10_003A - TK

Cable designation	from	to	Cable type	Length	Function text
=E1-510W4	=E1+TMA-EL-CS-CBT-0101-500A10	=E1-510S4	SHIELDED 4x1mm2		TMA elevation ring (+X) section 1 ETPB
=E1-510W5	=E1+TMA-EL-CS-CBT-0101-500A10	=E1-510S5	SHIELDED 4x1mm2		TMA elevation ring (+X) section 2 ETPB
=E1-510W6	=E1+TMA-EL-CS-CBT-0102-500A10	=E1-510S6	shielded 4x1mm2		TMA elevation ring (-X) section 1 ETPB
=E1-510W7	=E1+TMA-EL-CS-CBT-0102-500A10	=E1-510S7	shielded 4x1mm2		TMA elevation ring (-X) section 2 ETPB
=E1-510W8	=E1+TMA-PI-CS-CBT-0101-500A10	=E1-510S8	shielded 4x1mm2		TMA AZCW handrail top floor ETPB1
=E1-510W9	=E1+TMA-PI-CS-CBT-0101-500A10	=E1-510S9	shielded 4x1mm2		TMA AZCW handrail top floor ETPB2
=E1-511W1	=E1+TMA-AZ-CS-CBT-0001-500A11	=E1-511S1	shielded 4x1mm2		TMA azimuth area (+X) (beam 2) ETPB
=E1-511W2	=E1+TMA-AZ-CS-CBT-0001-500A11	=E1-511S2	shielded 4x1mm2		TMA azimuth area (+X) (beam 3) ETPB
=E1-511W3	=E1+TMA-AZ-CS-CBT-0101-500A11	=E1-511S3	SHIELDED 4x1mm2		TMA azimuth area (-X) (beam 2) ETPB
=E1-511W4	=E1+TMA-AZ-CS-CBT-0101-500A11	=E1-511S4	SHIELDED 4x1mm2		TMA azimuth area (-X) (beam 3) ETPB
=E1-511W5	=E1+TMA-EL-CS-CBT-0101-500A11	=E1-511S5	SHIELDED 4x1mm2		TMA elevation ring (+X) section 3 ETPB
=E1-511W6	=E1+TMA-EL-CS-CBT-0101-500A11	=E1-511S6	SHIELDED 4x1mm2		Elevation pylon 1 (+X) ETPB

Cable overview

F10_003A - TK

Cable designation	from	to	Cable type	Length	Function text
=E1-511W7	=E1+TMA-EL-CS-CBT-0102-500A11	=E1-511S7	shielded 4x1mm2		TMA elevation ring (-X) section 3 ETPB
=E1-511W8	=E1+TMA-EL-CS-CBT-0102-500A11	=E1-511S8	shielded 4x1mm2		Elevation pylon 1 (-X) ETPB
=E1-511W9	=E1+TMA-PI-CS-CBT-0101-500A11	=E1-511S9	shielded 4x1mm2		TMA AZCW handrail top floor ETPB3
=E1-511W10	=E1+TMA-PI-CS-CBT-0101-500A11	=E1-511S10	shielded 4x1mm2		TMA AZCW handrail middle floor ETPB1
=E1-512W1	=E1+TMA-AZ-CS-CBT-0001-500A12	=E1-512S1	SHIELDED 4x1mm2		TMA azimuth stair (+X) (section 1) ETPB
=E1-512W2	=E1+TMA-AZ-CS-CBT-0001-500A12	=E1-512S2	shielded 4x1mm2		TMA azimuth stair (+X) (section 2) ETPB
=E1-512W3	=E1+TMA-AZ-CS-CBT-0101-500A12	=E1-512S3	SHIELDED 4x1mm2		TMA azimuth stair (-X) (section 1) ETPB
=E1-512W4	=E1+TMA-AZ-CS-CBT-0101-500A12	=E1-512S4	SHIELDED 4x1mm2		TMA azimuth stair (-X) (section 2) ETPB
=E1-512W5	=E1+TMA-EL-CS-CBT-0101-500A12	=E1-512S5	SHIELDED 4x1mm2		Elevation pylon 2 (+X) ETPB
=E1-512W6	=E1+TMA-EL-CS-CBT-0101-500A12	=E1-512S6	SHIELDED 4x1mm2		TEA ETPB 1
=E1-512W7	=E1+TMA-EL-CS-CBT-0102-500A12	=E1-512S7	shielded 4x1mm2		Elevation pylon 2 (-X) ETPB
=E1-512W8	=E1+TMA-EL-CS-CBT-0102-500A12	=E1-512S8	shielded 4x1mm2		TEA ETPB 3
=E1-512W9	=E1+TMA-PI-CS-CBT-0101-500A12	=E1-512S9	shielded 4x1mm2		TMA AZCW handrail middle floor ETPB2

Cable overview

F10_003A - TK

Cable designation	from	to	Cable type	Length	Function text
=E1-512W10	=E1+TMA-PI-CS-CBT-0101-500A12	=E1-512S10	shielded 4x1mm2		TMA AZCW handrail middle floor ETPB3
=E1-513W1	=E1+TMA-AZ-CS-CBT-0001-500A13	=E1-513S1	shielded 4x1mm2		TMA azimuth stair (+X) (section 3) ETPB
=E1-513W2	=E1+TMA-AZ-CS-CBT-0001-500A13	=E1-513S2	shielded 4x1mm2		Deployable Platform 1 ETPB
=E1-513W3	=E1+TMA-AZ-CS-CBT-0101-500A13	=E1-513S3	SHIELDED 4x1mm2		TMA azimuth stair (-X) (section 3) ETPB
=E1-513W4	=E1+TMA-AZ-CS-CBT-0101-500A13	=E1-513S4	SHIELDED 4x1mm2		Deployable Platform 2 ETPB
=E1-513W5	=E1+TMA-EL-CS-CBT-0101-500A13	=E1-513S5	SHIELDED 4x1mm2		TEA ETPB 2
=E1-513W6	=E1+TMA-EL-CS-CBT-0102-500A13	=E1-513S6	shielded 4x1mm2		TEA ETPB 4
=E1-530W3	=E1+TMA-AZ-CS-CBT-0101-500A30	=E1-530Y3	SHIELDED 3G1,5		Elevation Brake 2
=E1-530W4	=E1+TMA-AZ-CS-CBT-0101-500A30	=E1-530Y4	SHIELDED 3G1,5		Azimuth Brake 5
=E1-531W3	=E1+TMA-AZ-CS-CBT-0101-500A31	=E1-531Y3	SHIELDED 3G1,5		Azimuth Brake 6
=E1-531W4	=E1+TMA-AZ-CS-CBT-0101-500A31	=E1-531Y4	SHIELDED 3G1,5		Azimuth Brake 7
=E1-532W2	=E1+TMA-AZ-CS-CBT-0101-500A32	=E1-532Y2	SHIELDED 3G1,5		Azimuth Brake 8

Cable overview

F10_003A - TK

Cable designation	from	to	Cable type	Length	Function text
=E1-533W1	=E1+TMA-AZ-CS-CBT-0001-500A38	=E1-533Y1	shielded 3G1,5		Elevation Brake
=E1-533W2	=E1+TMA-AZ-CS-CBT-0001-500A38	=E1-533Y2	shielded 3G1,5		Azimuth Brake 1
=E1-534W1	=E1+TMA-AZ-CS-CBT-0001-500A39	=E1-534Y1	shielded 3G1,5		Azimuth Brake 2
=E1-534W2	=E1+TMA-AZ-CS-CBT-0001-500A39	=E1-534Y2	shielded 3G1,5		Azimuth Brake 3
=E1-535W1	=E1+TMA-AZ-CS-CBT-0001-500A40	=E1-535Y1	shielded 3G1,5		Azimuth Brake 4
=E1-560W1	=E1+TMA-AZ-CS-CBT-0001-500A16	=E1-560S1	SHIELDED 3G1		AZ Platform Access Door Switch 1
=E1-560W2	=E1+TMA-AZ-CS-CBT-0001-500A16	=E1-560S2	SHIELDED 3G1		Access door 1 ladder parked position
=E1-561W1	=E1+TMA-PI-CS-CBT-0101-500A13	=E1-561S17	SHIELDED 3G1		Power off Azimuth Positive Limit Switch
=E1-561W2	=E1+TMA-AZ-CS-CBT-0001-500A17	=E1-561S2	SHIELDED 3G1		power off Elevation Positive Limit Switch
=E1-561W3	=E1+TMA-AZ-CS-CBT-0101-500A16	=E1-561S18	SHIELDED 3G1		Power off Elevation Negative Limit Switch
=E1-561W4	=E1+TMA-AZ-CS-CBT-0001-500A17	=E1-561S4	SHIELDED 3G1		power off AZCW Positive Limit Switch

Cable overview

F10_003A - TK

Cable designation	from	to	Cable type	Length	Function text
=E1-561W5	=E1+TMA-AZ-CS-CBT-0001-500A17	=E1-561S5	SHIELDED 3G1		power off AZCW Negative Limit Switch
=E1-561W6	=E1+TMA-EL-CS-CBT-0101-500A14	=E1-561S6	SHIELDED 3G1		Hatch 1 Switch
=E1-561W7	=E1+TMA-EL-CS-CBT-0101-500A14	=E1-561S7	SHIELDED 3G1		Hatch 2 Switch
=E1-561W8	=E1+TMA-EL-CS-CBT-0101-500A14	=E1-561S8	SHIELDED 4x1		Mirror cover 1 assembly locked
=E1-561W9	=E1+TMA-EL-CS-CBT-0102-500A14	=E1-561S9	shielded 3G1		Hatch 3 Switch
=E1-561W10	=E1+TMA-EL-CS-CBT-0102-500A14	=E1-561S10	shielded 3G1		Hatch 4 Switch
=E1-561W11	=E1+TMA-EL-CS-CBT-0102-500A14	=E1-561S16	SHIELDED 4x1		Mirror cover 2 assembly locked
=E1-561W12	=E1+TMA-PI-CS-CBT-0101-500A13	=E1-561S12	shielded 3G1		Hard stop 1 topple block LS1
=E1-561W14	=E1+TMA-PI-CS-CBT-0101-500A13	=E1-561S14	shielded 3G1		Hard stop 2 topple block LS1

Cable overview

F10_003A - TK

Cable designation	from	to	Cable type	Length	Function text
=E1-562W1	=E1+TMA-AZ-CS-CBT-0001-500A18	=E1-562S1	SHIELDED 3G1		Deployable Platform 1 Module 1 Parking Position
=E1-562W2	=E1+TMA-AZ-CS-CBT-0001-500A18	=E1-562S2	SHIELDED 3G1		Deployable Platform 1 Module 2 Parking Position
=E1-562W3	=E1+TMA-AZ-CS-CBT-0001-500A18	=E1-562S3	SHIELDED 3G1		Deployable Platform 1 Extension 1 Inserted Position
=E1-562W4	=E1+TMA-AZ-CS-CBT-0001-500A18	=E1-562S4	SHIELDED 3G1		Deployable Platform 1 Extension 2 Inserted Position
=E1-564W1	=E1+TMA-AZ-CS-CBT-0001-500A20	=E1-564S1	SHIELDED 3G1		Elevation Locking Pin 1 Inserted
=E1-564W2	=E1+TMA-AZ-CS-CBT-0001-500A20	=E1-564S2	shielded 3G1		Elevation Locking Pin 1 Test
=E1-564W3	=E1+TMA-AZ-CS-CBT-0001-500A20	=E1-564S3	SHIELDED 3G1		Elevation Locking Pin 1 retracted
=E1-570W1	=E1+TMA-AZ-DR-CPB-0001-X20	=E1+TMA-AZ-CS-CBT-0101-500A14	2x1mm2 Shielded		PHASE CAPACITOR CABINET 1 DOOR SWITCH
=E1-570W2	=E1+TMA-AZ-DR-CPB-0001-X20	=E1+TMA-AZ-CS-CBT-0101-500A14	2x1mm2 Shielded		PHASE CAPACITOR CABINET 1 DOOR SWITCH

Cable overview

F10_003A - TK

Cable designation	from	to	Cable type	Length	Function text
=E1-570W3	=E1+TMA-AZ-DR-CPB-0001-X20	=E1+TMA-AZ-CS-CBT-0101-500A14	2x1mm2 Shielded		PHASE CAPACITOR CABINET 1 DOOR SWITCH
=E1-570W4	=E1+TMA-AZ-DR-CPB-0001-X20	=E1+TMA-AZ-CS-CBT-0101-500A14	2x1mm2 Shielded		PHASE CAPACITOR CABINET 1 DOOR SWITCH
=E1-570W5	=E1+TMA-AZ-DR-CPB-0001-X20	=E1+TMA-AZ-CS-CBT-0101-500A15	2x1mm2 Shielded		PHASE CAPACITOR CABINET 1 DOOR SWITCH
=E1-570W6	=E1+TMA-AZ-DR-CPB-0001-X20	=E1+TMA-AZ-CS-CBT-0101-500A15	2x1mm2 Shielded		PHASE CAPACITOR CABINET 1 DOOR SWITCH
=E1-570W7	=E1+TMA-AZ-DR-CPB-0001-X20	=E1+TMA-AZ-CS-CBT-0101-500A15	2x1mm2 Shielded		PHASE CAPACITOR CABINET 1 DOOR SWITCH
=E1-570W8	=E1+TMA-AZ-DR-CPB-0001-X20	=E1+TMA-AZ-CS-CBT-0101-500A15	2x1mm2 Shielded		PHASE CAPACITOR CABINET 1 DOOR SWITCH
=E1-571W1	=E1+TMA-AZ-CS-CBT-0101-500A16	=E1-571S1	SHIELDED 3G1		AZ Platform Access Door Switch 2
=E1-571W2	=E1+TMA-AZ-CS-CBT-0101-500A16	=E1-571S2	SHIELDED 3G1		Access door 2 ladder parked position
=E1-571W3	=E1+TMA-AZ-CS-CBT-0101-500A16	=E1-571S3	SHIELDED 3G1		Power off Azimuth Negative Limit Switch
=E1-572W1	=E1+TMA-AZ-CS-CBT-0101-500A17	=E1-572S1	SHIELDED 3G1		Deployable Platform 2 Module 1 Parking Position
=E1-572W2	=E1+TMA-AZ-CS-CBT-0101-500A17	=E1-572S2	SHIELDED 3G1		Deployable Platform 2 Module 2 Parking Position

Cable overview

F10_003A - TK

Cable designation	from	to	Cable type	Length	Function text
=E1-572W3	=E1+TMA-AZ-CS-CBT-0101-500A17	=E1-572S3	SHIELDED 3G1		Deployable Platform 2 Extension 1 Inserted Position
=E1-572W4	=E1+TMA-AZ-CS-CBT-0101-500A17	=E1-572S4	SHIELDED 3G1		Deployable Platform 2 Extension 2 Inserted Position
=E1-574W1	=E1+TMA-AZ-CS-CBT-0101-500A19	=E1-574S1	SHIELDED 3G1		Elevation Locking Pin 2 Inserted
=E1-574W2	=E1+TMA-AZ-CS-CBT-0101-500A19	=E1-574S2	SHIELDED 3G1		Elevation Locking Pin 2 Test
=E1-574W3	=E1+TMA-AZ-CS-CBT-0101-500A19	=E1-574S3	SHIELDED 3G1		Elevation Locking Pin 2 retracted
=E1-630W1	=E1+TMA-AZ-CS-CBT-0001-X10	=E1-630Y1	SHIELDED 4G1,5		AZIMUTH 1-8 MIXING VALVE
=E1-630W2	=E1+TMA-AZ-CS-CBT-0001-X10	=E1-630Y1	shielded 3X0,5		AZIMUTH 1-8 MIXING VALVE SETPOINT
=E1-630W3	=E1+TMA-AZ-CS-CBT-0001-X10	=E1-630Y2	SHIELDED 4G1,5		AZIMUTH 9-16 MIXING VALVE
=E1-630W4	=E1+TMA-AZ-CS-CBT-0001-X10	=E1-630Y2	shielded 3X0,5		AZIMUTH 9-16 MIXING VALVE SETPOINT

Cable overview

F10_003A - TK

Cable designation	from	to	Cable type	Length	Function text
=E1-630W5	=E1+TMA-AZ-CS-CBT-0101-X10	=E1+TMA-AZ-CS-CBT-0101-630Y1	SHIELDED 4G1,5		AZIMUTH 1-8 MIXING VALVE
=E1-630W6	=E1+TMA-AZ-CS-CBT-0101-X10	=E1+TMA-AZ-CS-CBT-0101-630Y1	SHIELDE 3X0,5		AZIMUTH 1-8 MIXING VALVE SETPOINT
=E1-630W7	=E1+TMA-AZ-CS-CBT-0101-X10	=E1+TMA-AZ-CS-CBT-0101-630Y2	SHIELDED 4G1,5		AZIMUTH 9-16 MIXING VALVE
=E1-630W8	=E1+TMA-AZ-CS-CBT-0101-X10	=E1+TMA-AZ-CS-CBT-0101-630Y2	SHIELDED 3X0,5		AZIMUTH 9-16 MIXING VALVE SETPOINT
=E1-631W1	=E1+TMA-AZ-CS-CBT-0001-X10	=E1-631Y1	SHIELDED 4G1,5		ELEVATION 1-6 MIXING VALVE
=E1-631W2	=E1+TMA-AZ-CS-CBT-0001-X10	=E1-631Y1	shielded 3X0,5		EL1-6 MIXING VALVE SETPOINT
=E1-631W3	=E1+TMA-AZ-CS-CBT-0101-X10	=E1+TMA-AZ-CS-CBT-0101-631Y1	SHIELDED 4G1,5		ELEVATION 1-6 MIXING VALVE
=E1-631W4	=E1+TMA-AZ-CS-CBT-0101-X10	=E1+TMA-AZ-CS-CBT-0101-631Y1	SHIELDED 3X0,5		EL1-6 MIXING VALVE SETPOINT
=E1-701W1	=E1+TMA-AZ-CS-CBT-0001-X10	=E1+TMA-AZ-UC-AC4-X9	shielded 4G2,5		400V 50HZ AZCW BOX 1 (PIER)
=E1-701W1A	=E1+TMA-PI-CS-CBT-0101-X10	=E1+TMA-PI-UC-AC1-X9	shielded 4G2,5		400V 50HZ AZCW BOX 1 (PIER)
=E1-701W2	=E1+TMA-AZ-CS-CBT-0001-X10	=E1+TMA-AZ-CS-CBT-0101-X10	SHIELDED 4G2,5		400V 50HZ AZ AUXILIARY BOX 1

Cable overview

F10_003A - TK
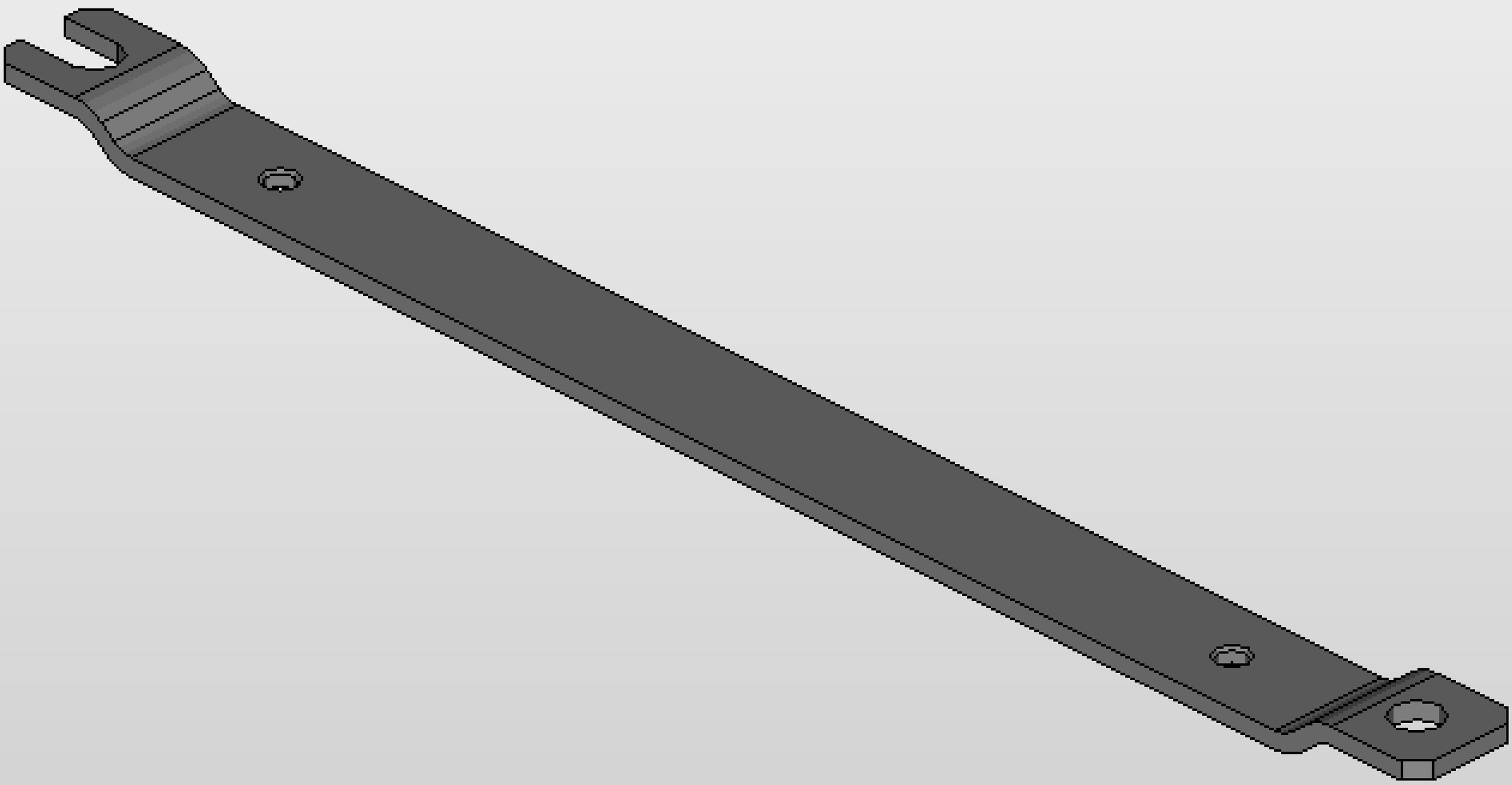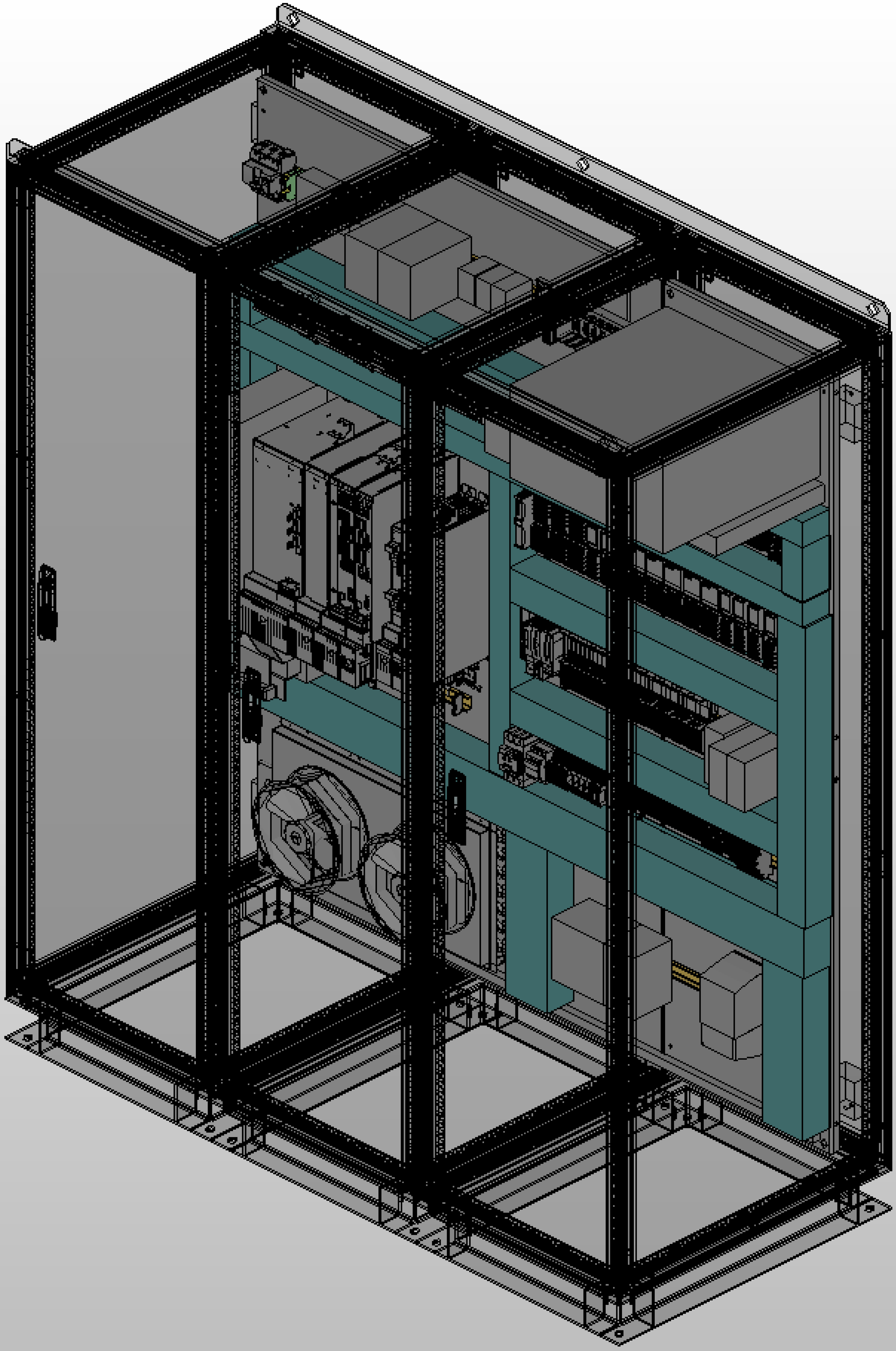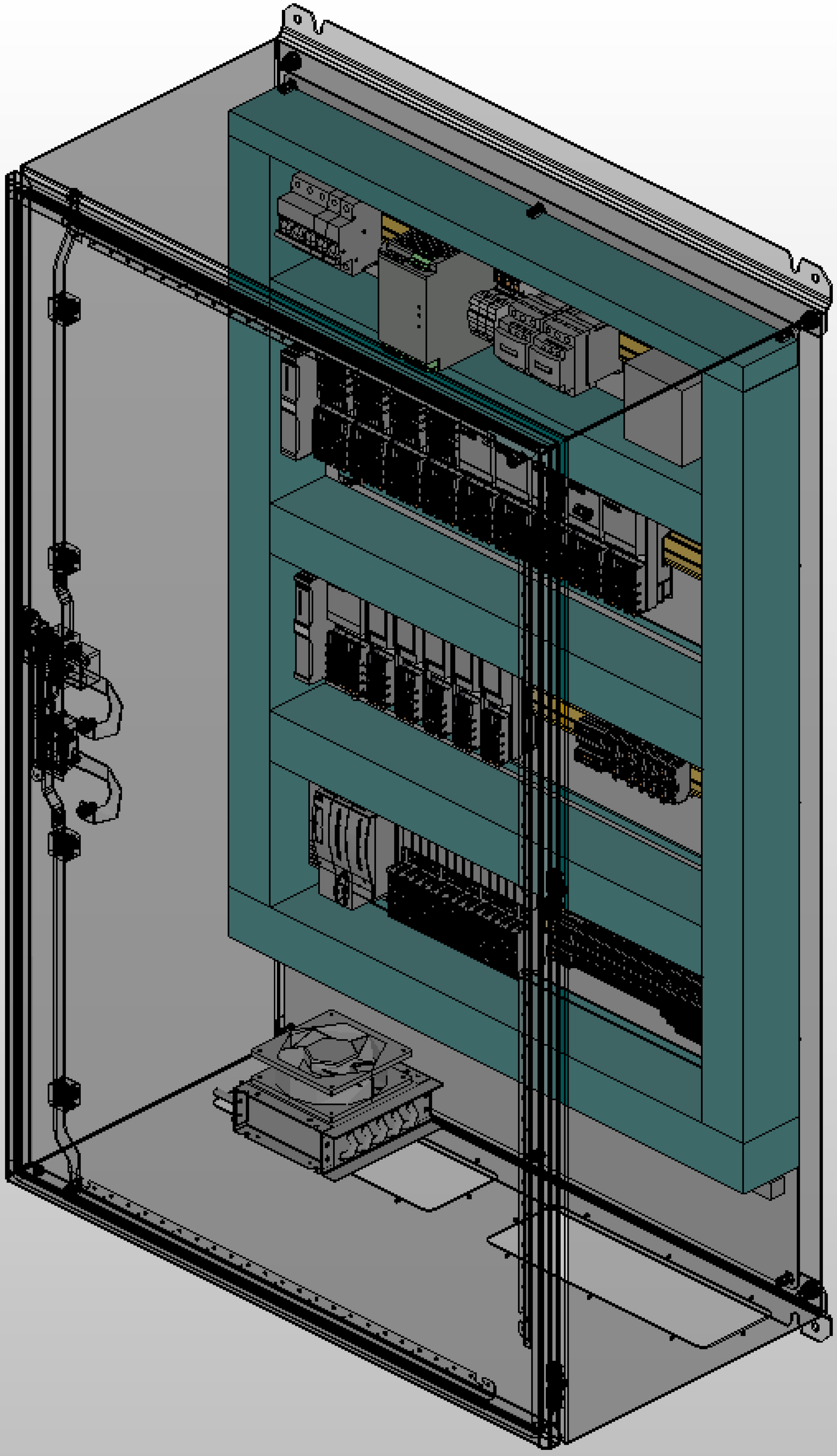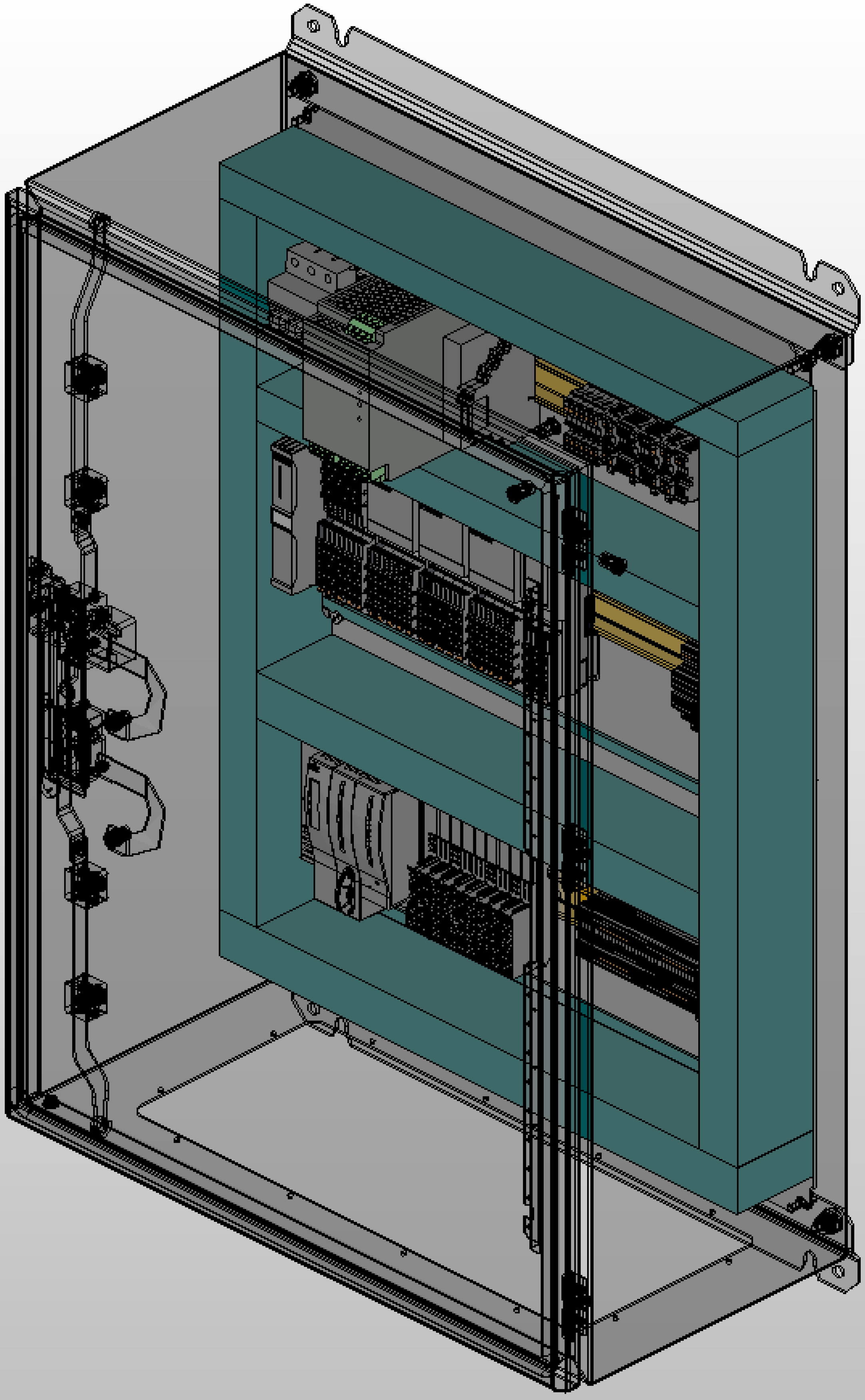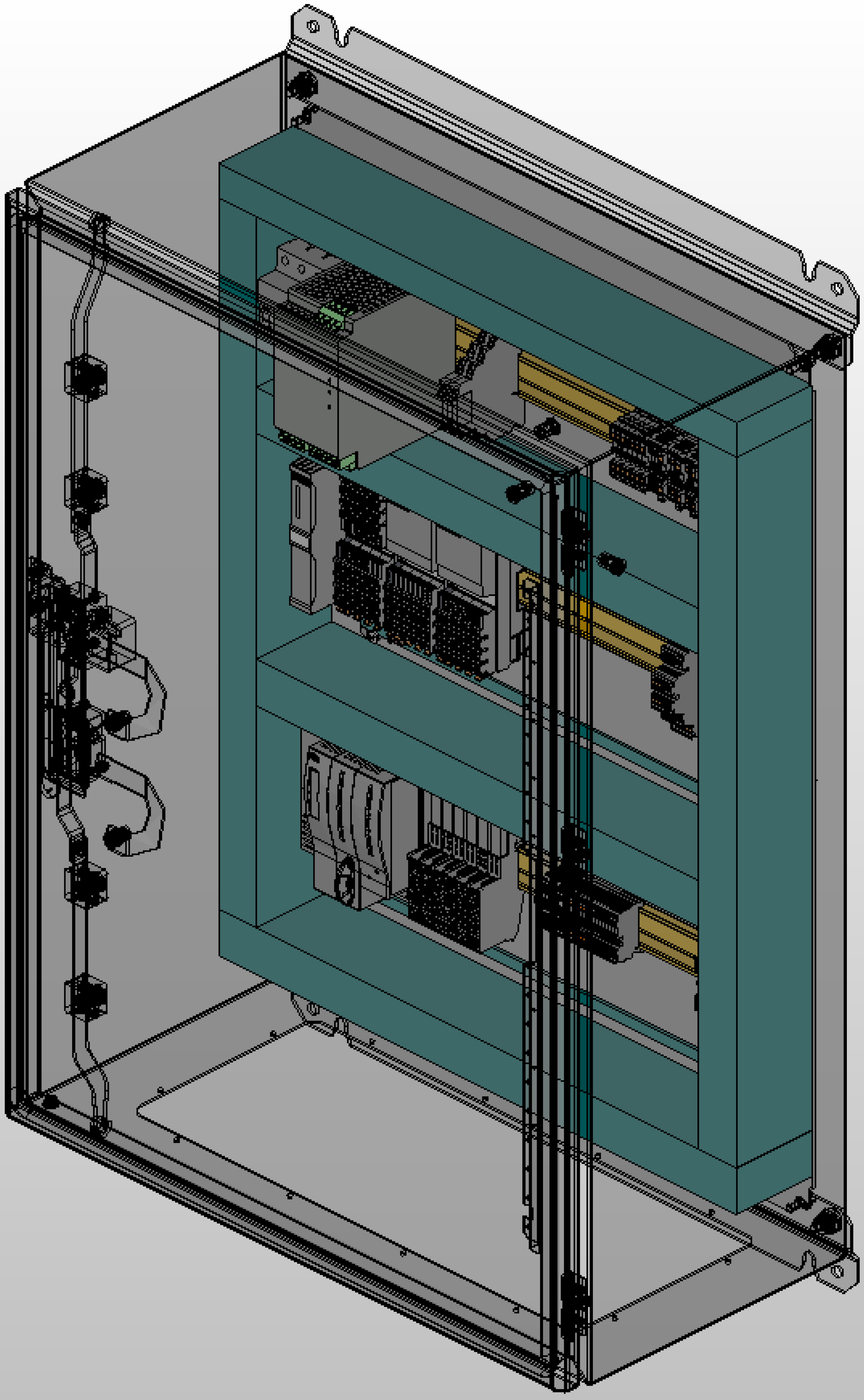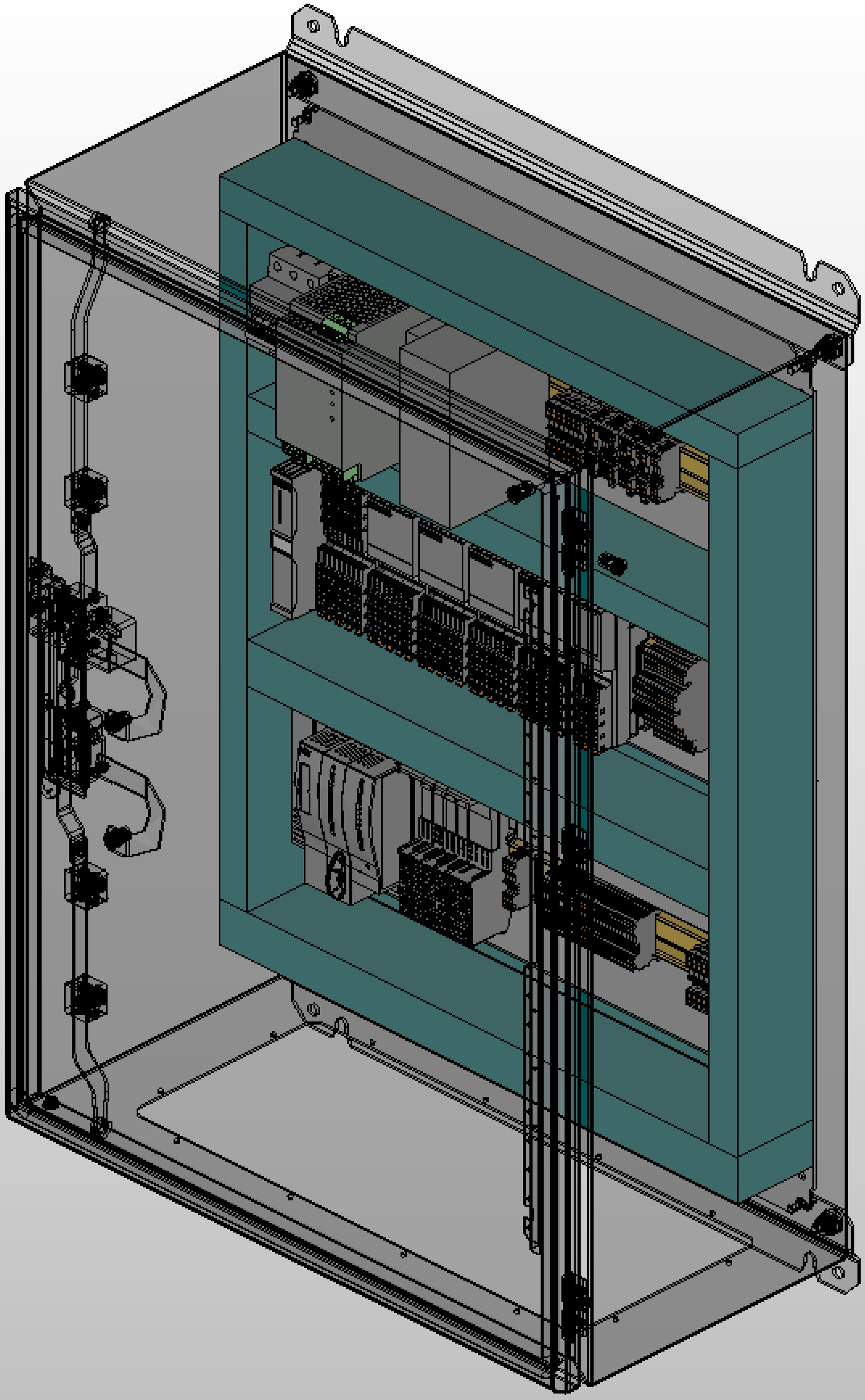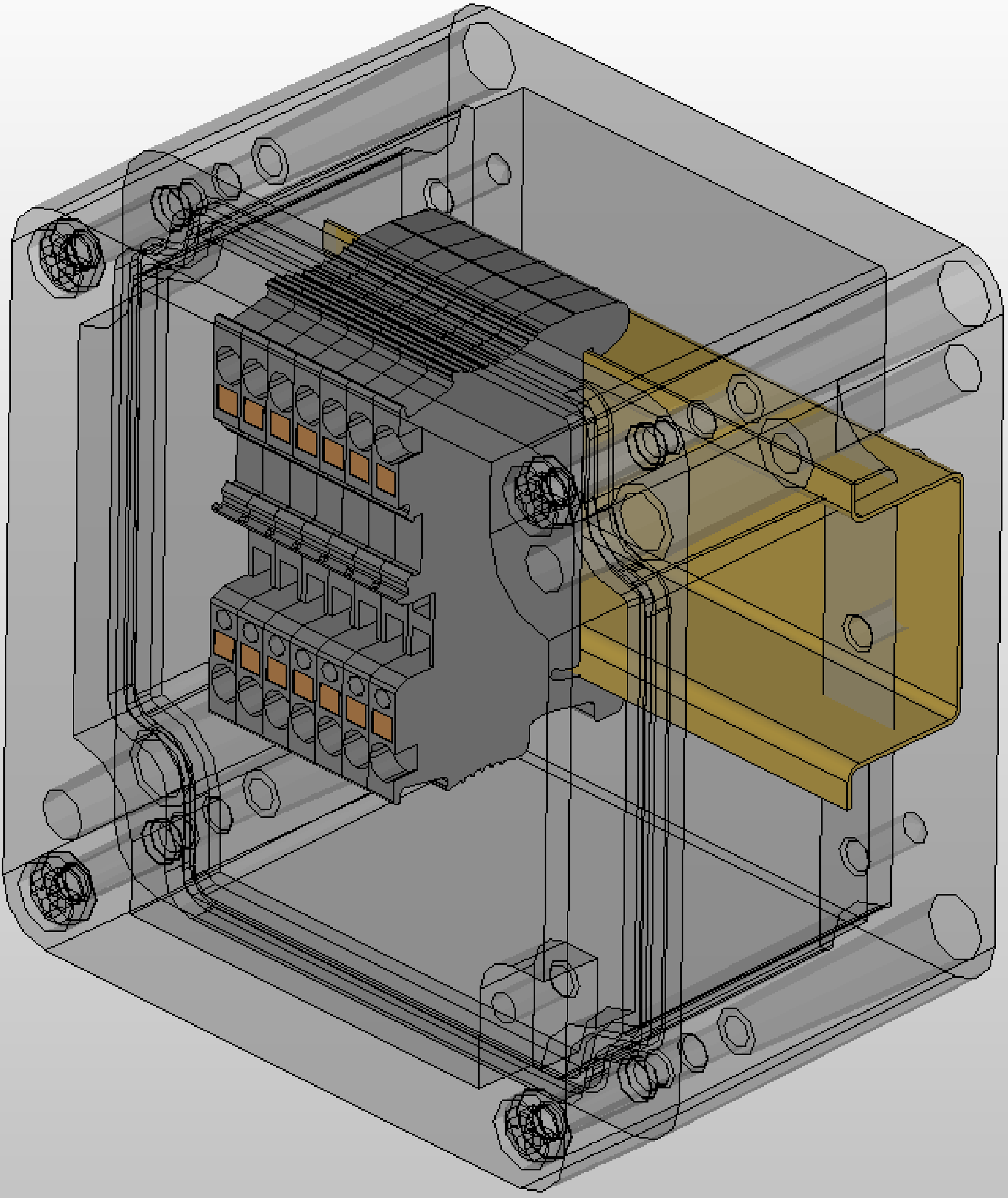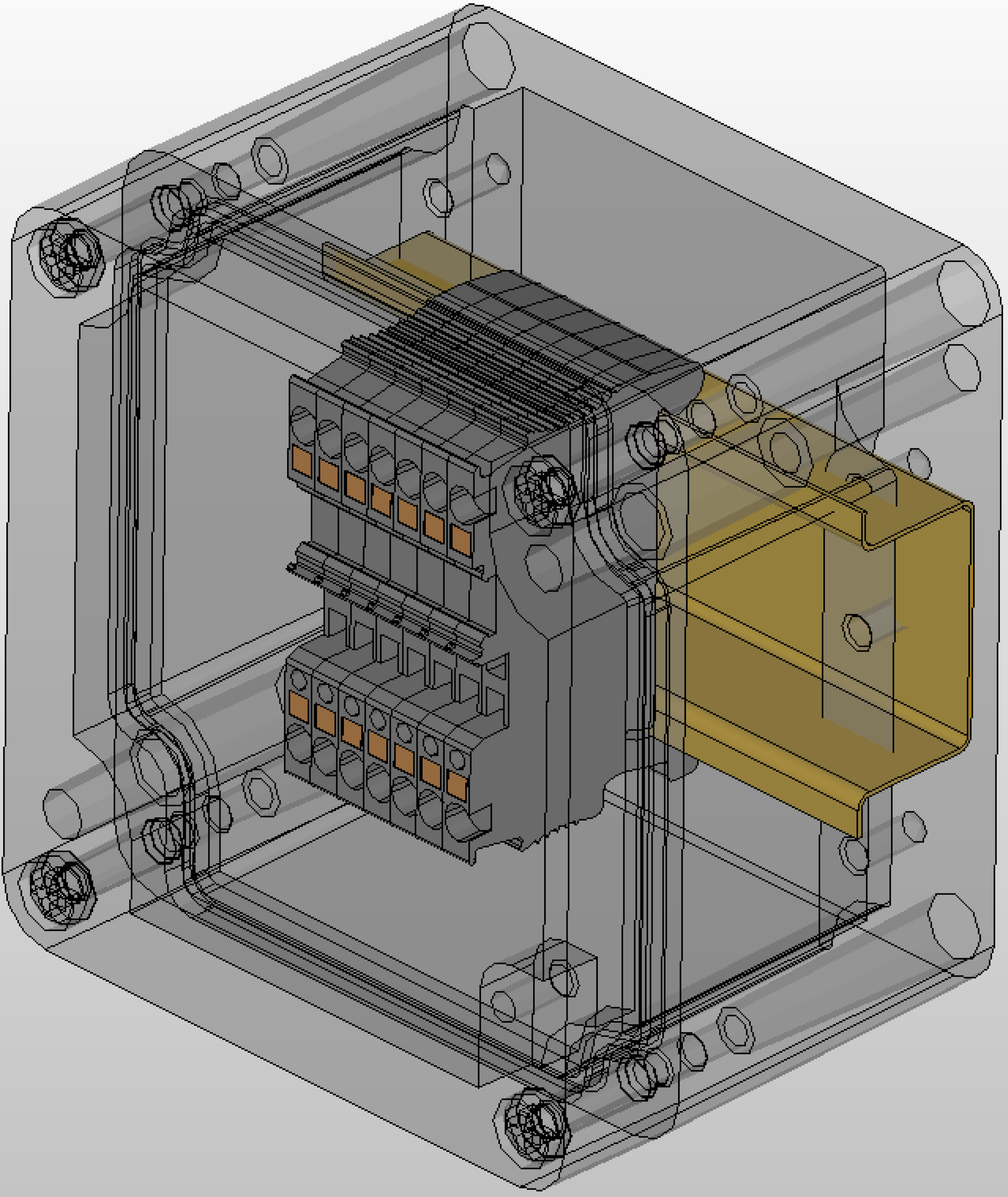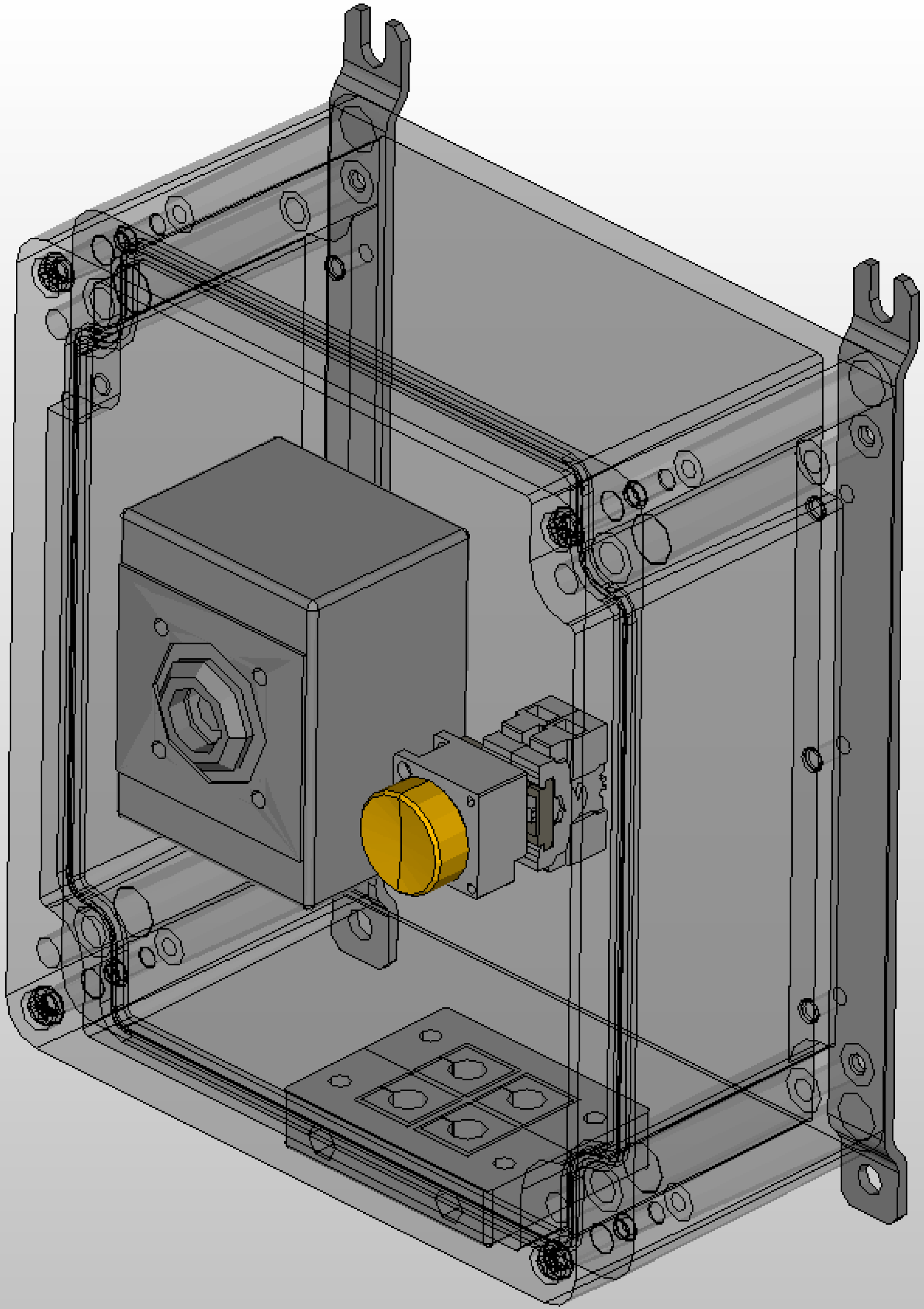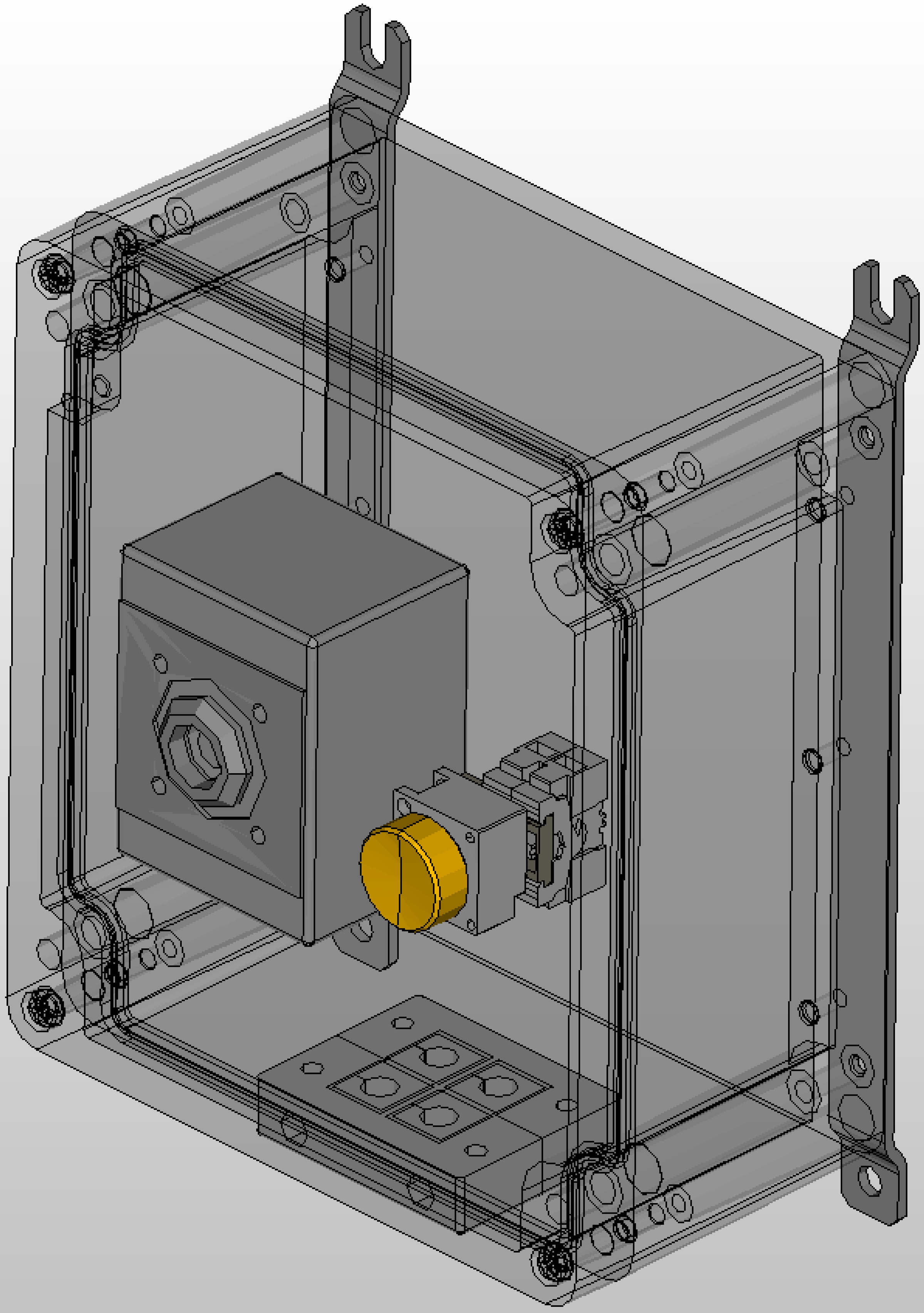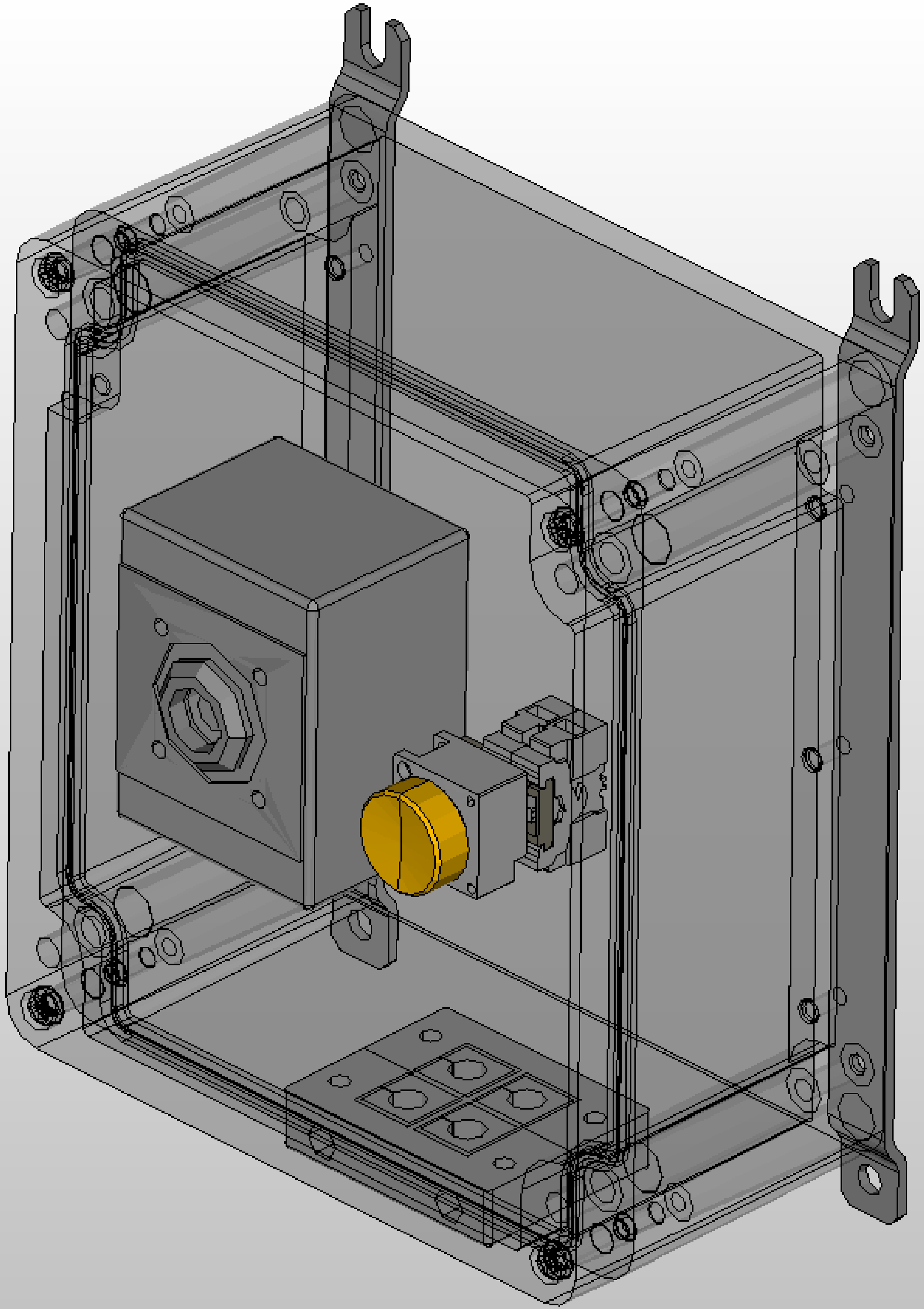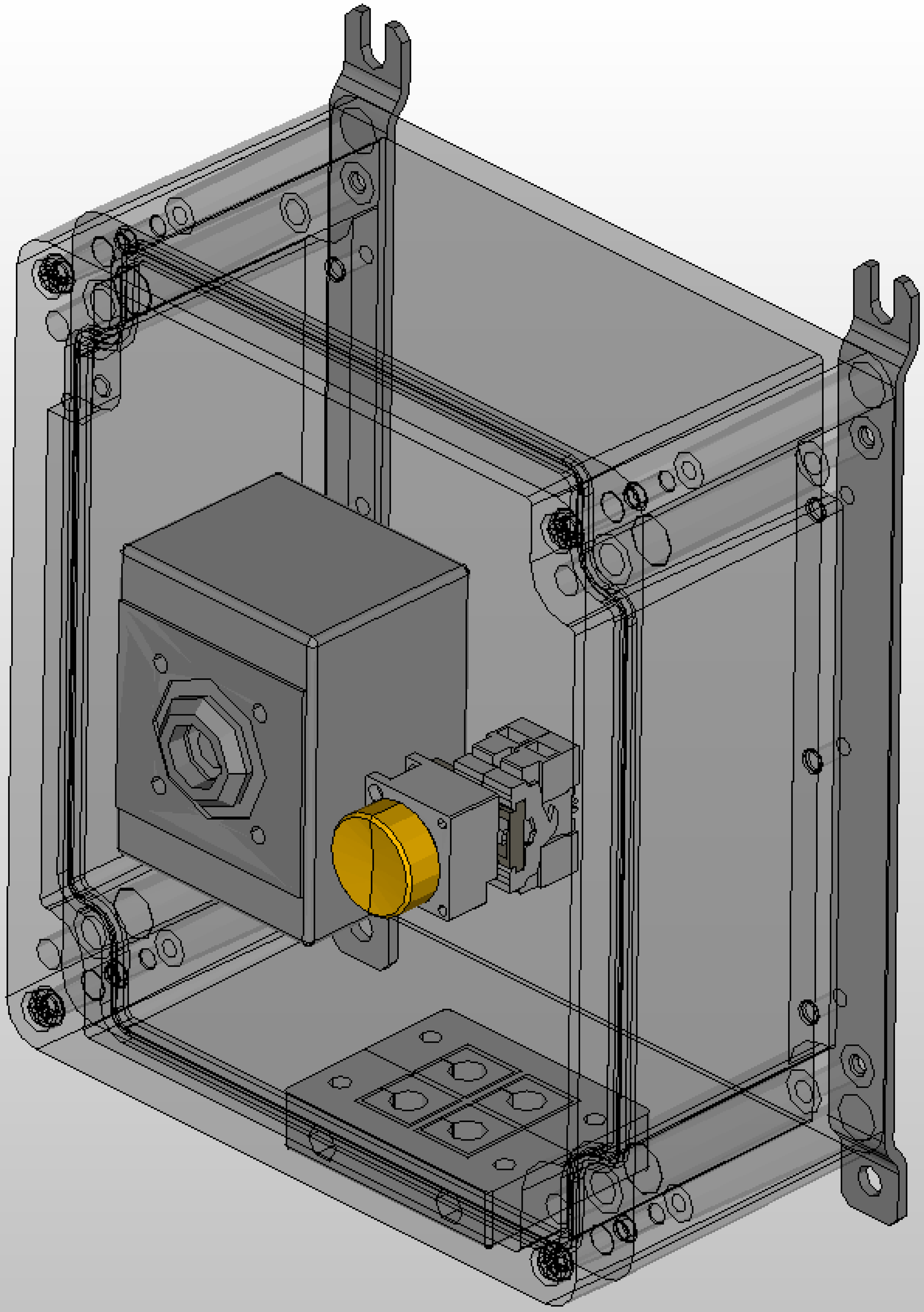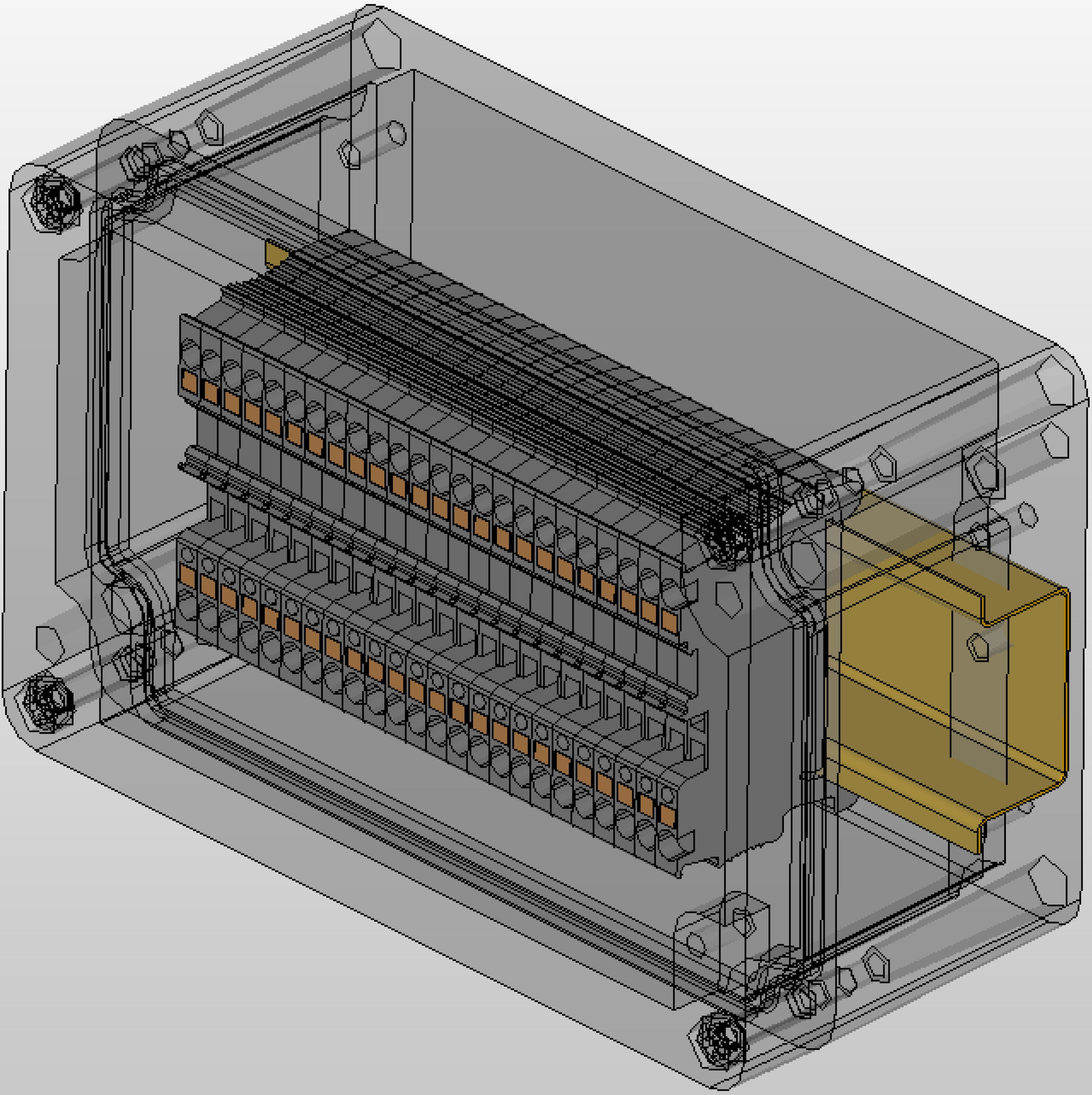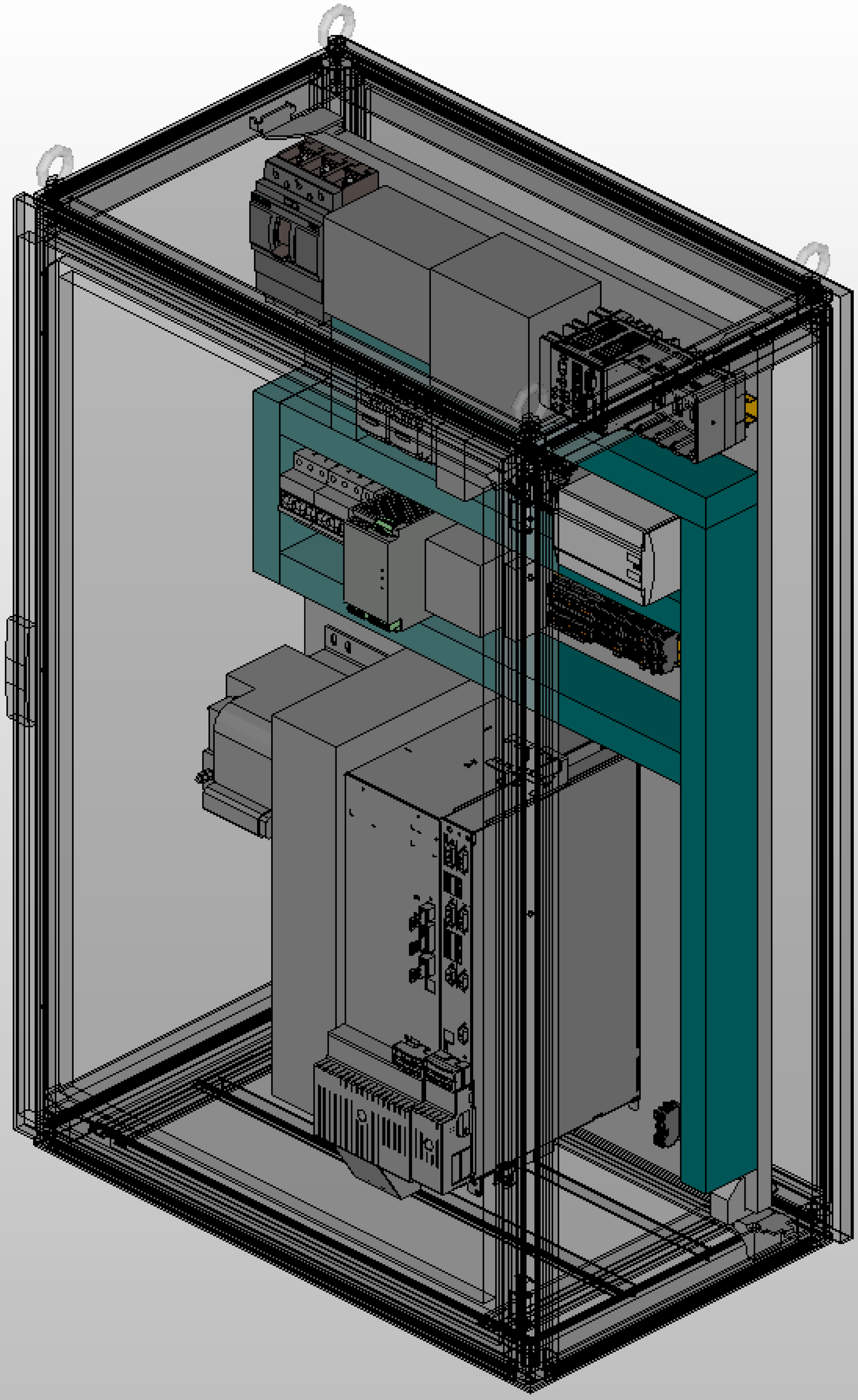
Cable designation	from	to	Cable type	Length	Function text
=E1-701W3	=E1+TMA-AZ-CS-CBT-0001-X10	=E1+TMA-AZ-UC-EC1-X5	SHIELDED 4G2,5		400V 50HZ EL AUXILIARY BOX 1
=E1-701W3A	=E1+TMA-EL-CS-CBT-0101-X10	=E1+TMA-EL-UC-EC3-X5	SHIELDED 4G2,5		400V 50HZ EL AUXILIARY BOX 1
=E1-701W4	=E1+TMA-AZ-CS-CBT-0001-X10	=E1+TMA-AZ-UC-EC2-X8	SHIELDED 4G2,5		400V 50HZ EL AUXILIARY BOX 2
=E1-701W4A	=E1+TMA-EL-CS-CBT-0102-X10	=E1+TMA-EL-UC-EC4-X8	SHIELDED 4G2,5		400V 50HZ EL AUXILIARY BOX 1