Rubin Observatory - TMA

HARDWARE

Julen Garcia | Tekniker | 12/10/2023

©Tekniker

Tekniker
MEMBER OF BASQUE RESEARCH & TECHNOLOGY ALLIANCE

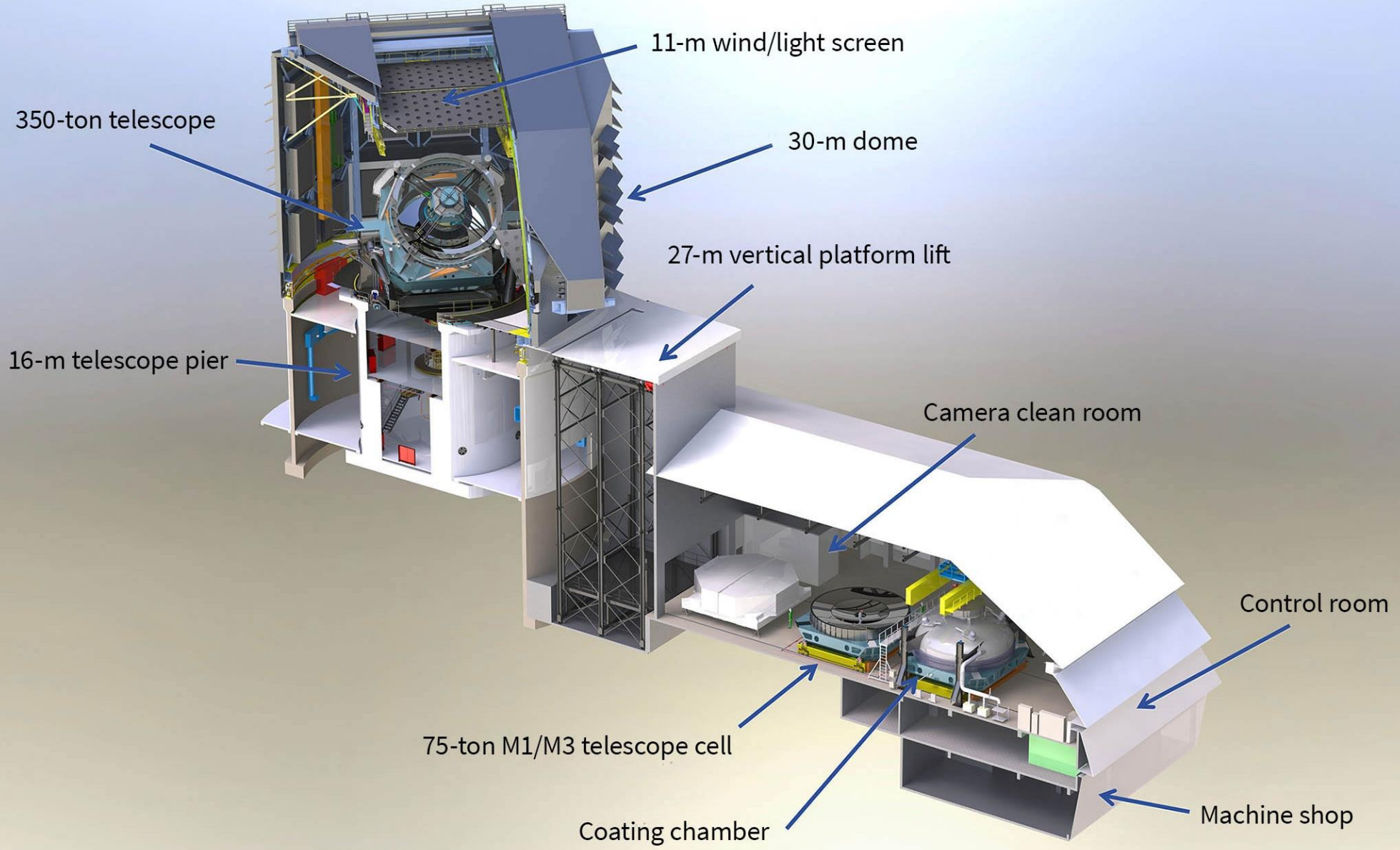

Rubin Observatory/NSF/AURA

©Tekniker

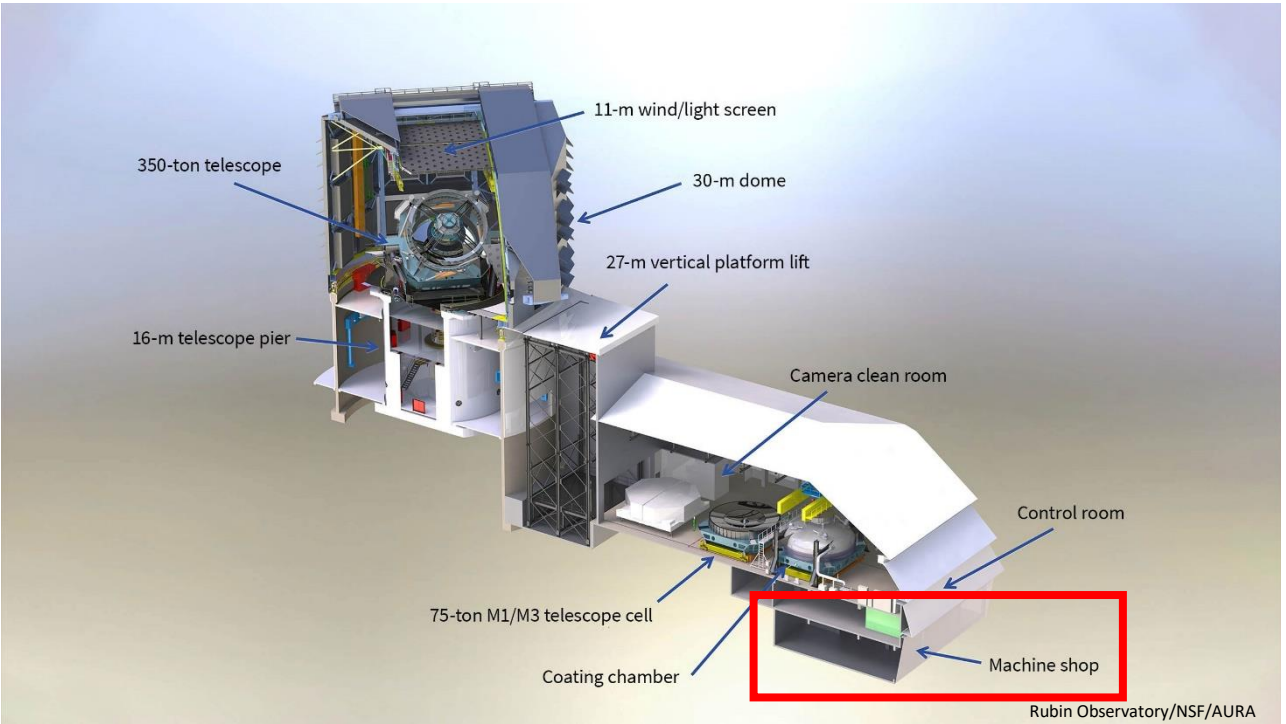

Oil Supply System (OSS)

- Location: Machine Shop Level 1
- Purpose: pressurized oil supply (bearings and brake oil supply)
- Additional info:
  - Distributed control cabinets in the TMA with temperature control, the MCS provides just the setpoint for those cabinets

©Tekniker

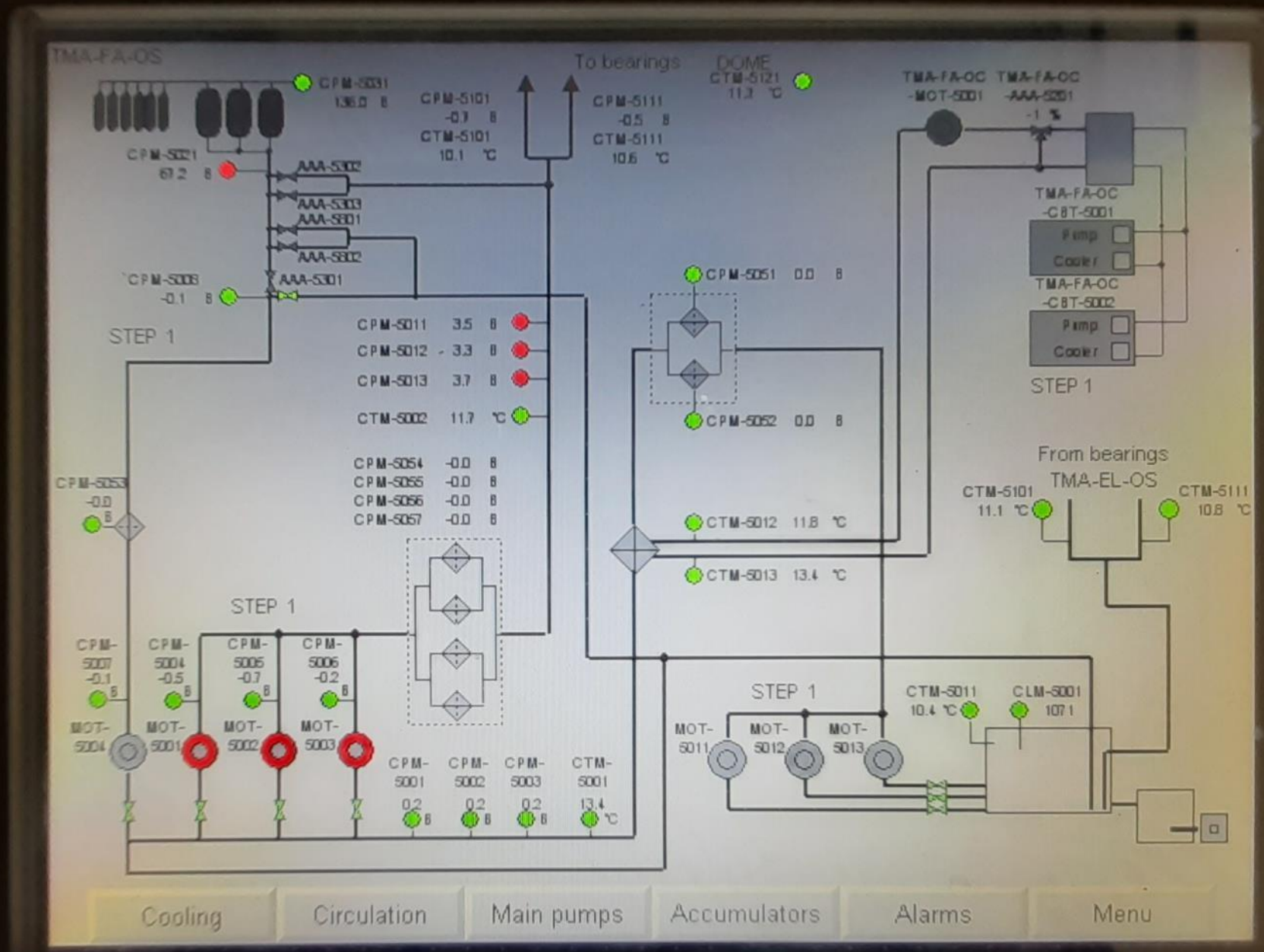
TMA-FA-OS
To bearings
DOME
CTM-5121 11.3 °C
CPM-5031 136.0 B
CPM-5101 -0.7 B
CTM-5101 10.1 °C
CPM-5111 -0.5 B
CTM-5111 10.6 °C
TMA-FA-OC -MOT-5001
TMA-FA-OC -AAA-5251 -1 %
CPM-5021 67.2 B
AAA-5302
AAA-5303
AAA-5301
AAA-5302
AAA-5301
CPM-5003 -0.1 B
TMA-FA-OC -CBT-5001
Pump
Cooler
TMA-FA-OC -CBT-5002
Pump
Cooler
STEP 1
CPM-5051 0.0 B
CPM-5011 3.5 B
CPM-5012 3.3 B
CPM-5013 3.7 B
CTM-5002 11.7 °C
CPM-5052 0.0 B
STEP 1
From bearings
TMA-EL-OS
CPM-5054 -0.0 B
CPM-5055 -0.0 B
CPM-5056 -0.0 B
CPM-5057 -0.0 B
CPM-5053 -0.0 B
CTM-5101 11.1 °C
CTM-5111 10.8 °C
CTM-5012 11.8 °C
CTM-5013 13.4 °C
STEP 1
CPM-5007 -0.1 B
CPM-5004 -0.5 B
CPM-5005 -0.7 B
CPM-5006 -0.2 B
MOT-5004
MOT-5001
MOT-5002
MOT-5003
CPM-5001 0.2 B
CPM-5002 0.2 B
CPM-5003 0.2 B
CTM-5001 13.4 °C
STEP 1
CTM-5011 10.4 °C
CLM-5001 107.1
MOT-5011
MOT-5012
MOT-5013
Cooling
Circulation
Main pumps
Accumulators
Alarms
Menu

©Tekniker

12.7 c

OSS GENERAL VIEW

HOME > MONITOR & CONTROL > MAIN AXIS > OSS SYSTEM > OSS GENERAL VIEW

OPERATION MANAGER
status
Enable

SAFETY SYSTEM
local GIS ETPB WD

Tekniker
MEMBER OF BASQUE RESEARCH & TECHNOLOGY ALLIANCE

MAIN AXES
OSS GENERAL VIEW
OSS OIL COOLING
OSS OIL CIRCULATION
OSS MAIN PUMPS
OSS ACCUMULATORS
AZIMUTH BEARINGS 1
AZIMUTH BEARINGS 2
ELEVATION BEARINGS

MONITORING

OSS
status
Idle

observation
acumulators
cooling
oil circulation
pump

MODE	COMMAND
auto	local
manual	remote

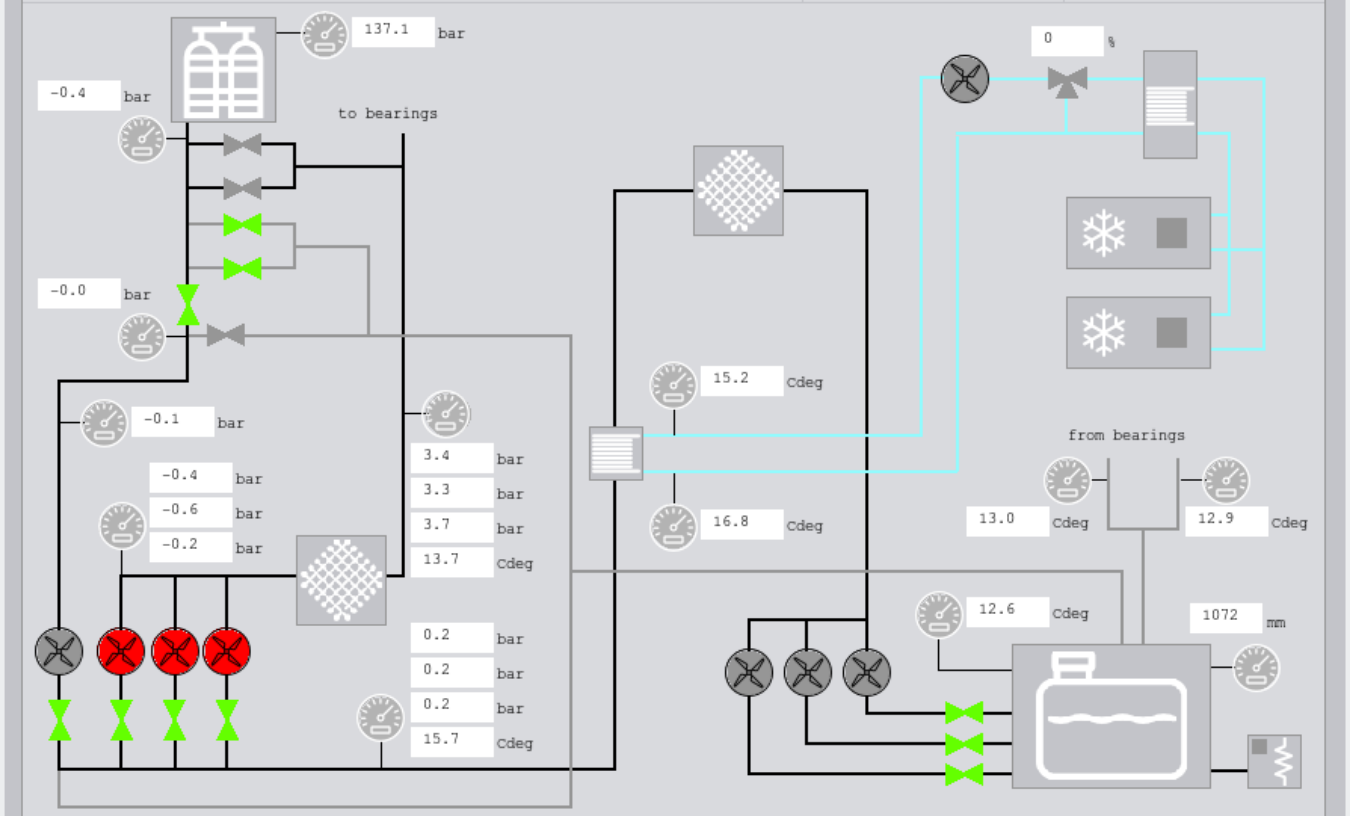

CONTROL

ON | OFF | RESET ALARM | ABORT POWER

MODE
AUTO | MANUAL

COOLING
ON | OFF | ABORT POWER

OIL
ON | OFF | ABORT POWER

MAIN PUMP
ON | OFF | ABORT POWER

1/1

GENERAL
LOCAL

LOCAL: THERE ARE NO ALARMS OR WARNINGS

©Tekniker

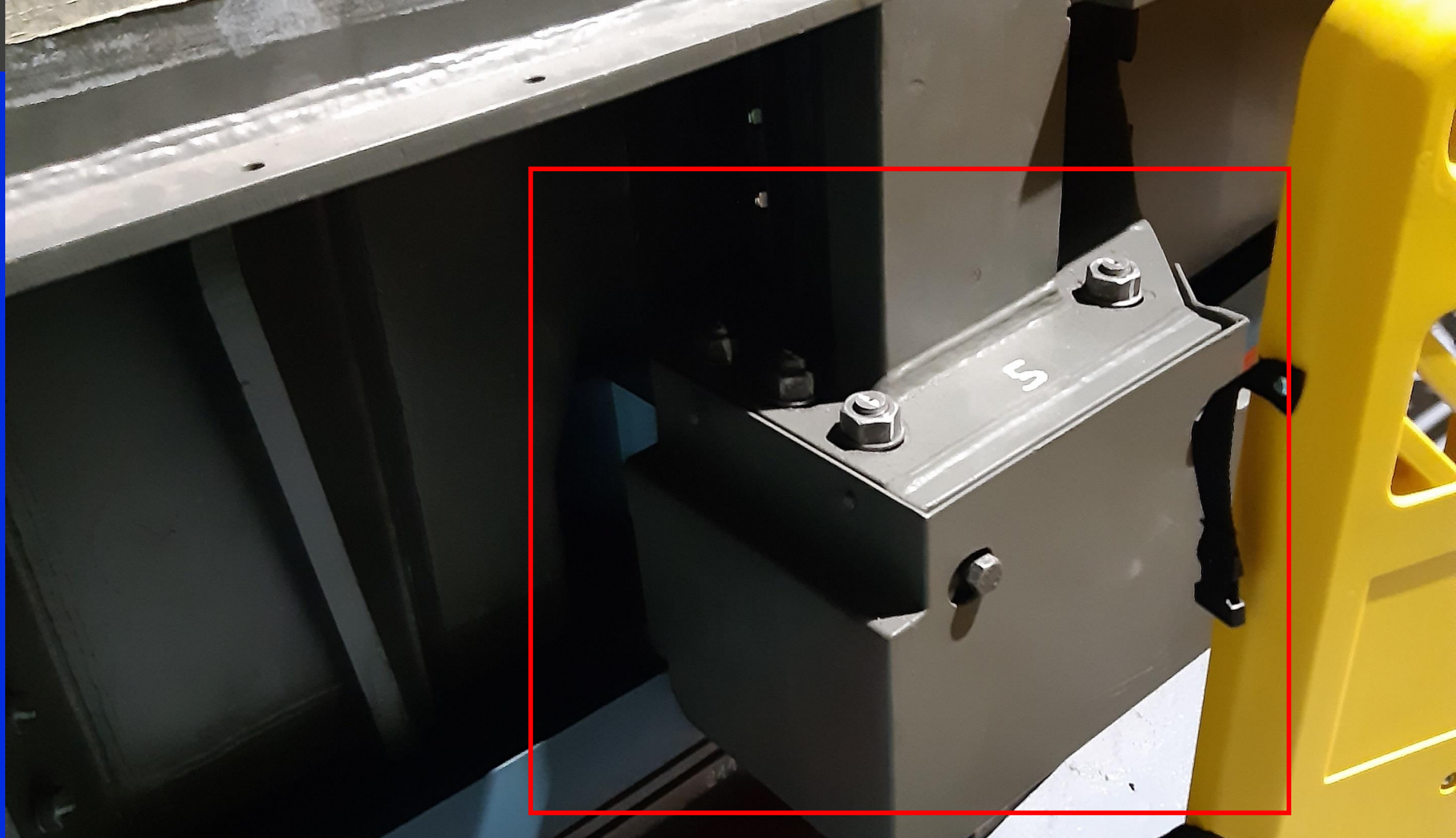

©Tekniker

©Tekniker

©Tekniker

V211-S001
TMA-AL-OS-CPM-5041
CONTROL VALVE
CONTROL VALVE
CONTROL VALVE

Oil Supply System (OSS)

- Distributed control cabinets in the TMA with temperature control, the MCS provides just the setpoint for those cabinets

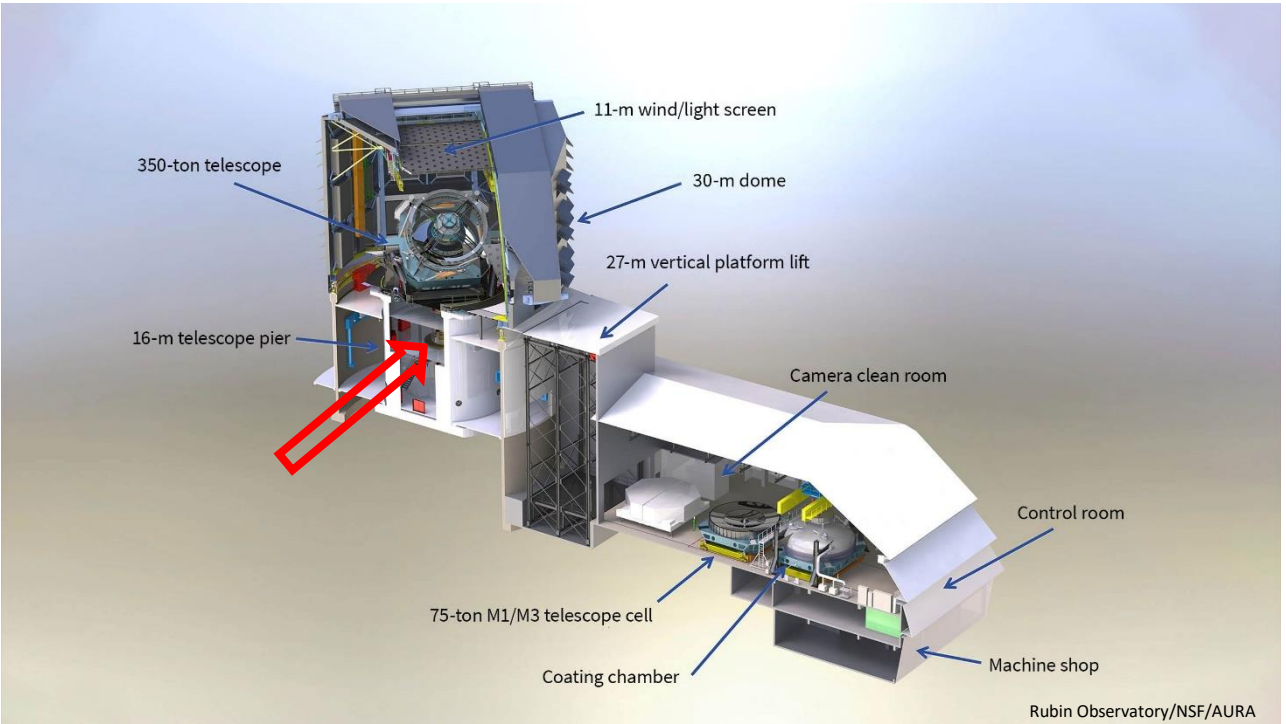

TMA Pier Cabinet (CBT-0101)

- Location: level 6 (under the TMA)
- Purpose: contains auxiliary signals for the main cabinet
  - Safety I/O module
  - Ethercat I/O module

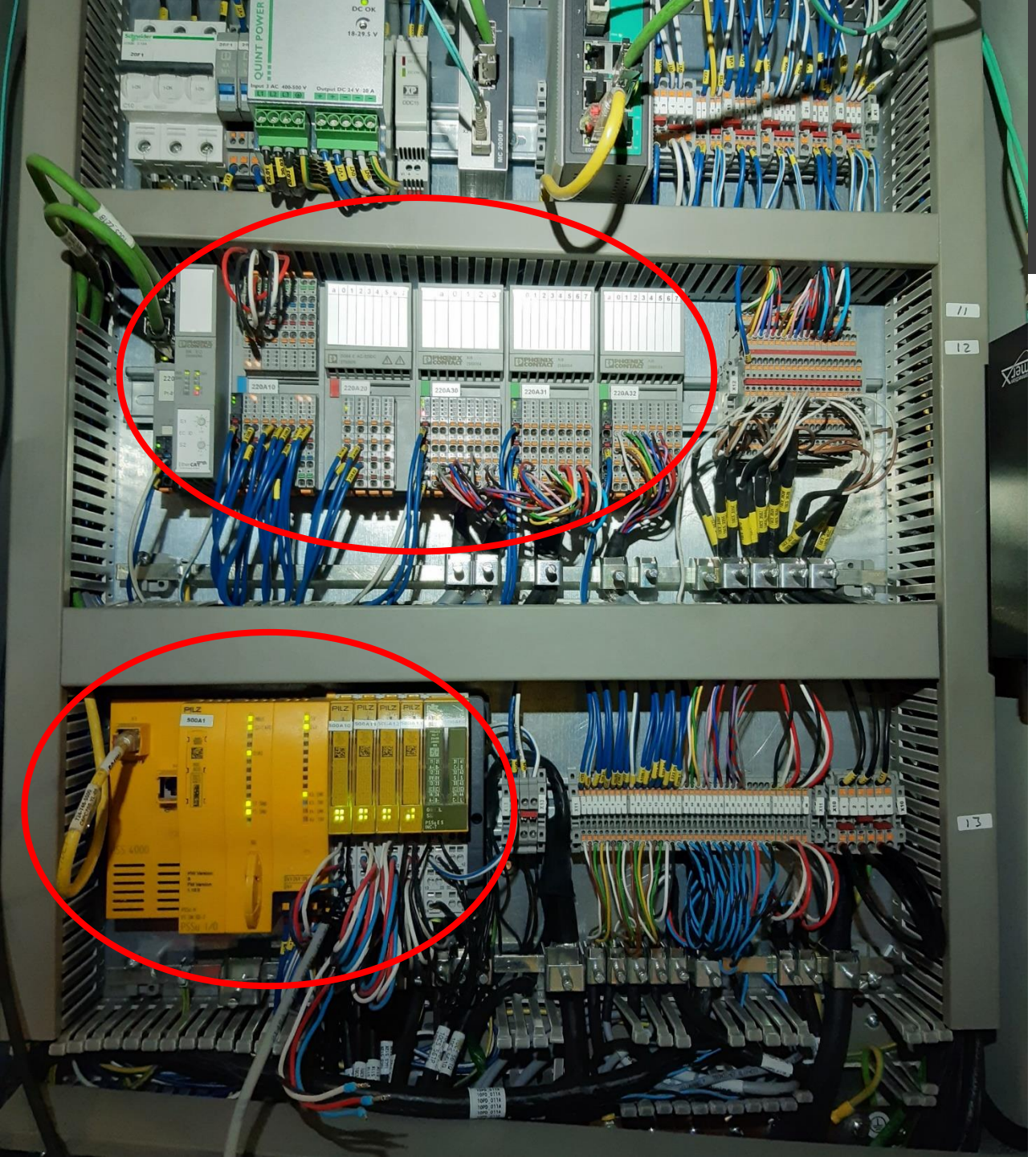

TMA Pier Cabinet (CBT-0101)

- Location: level 6 (under the TMA)
- Purpose: contains auxiliary signals for the main cabinet
  - Safety I/O module
  - Ethercat I/O module

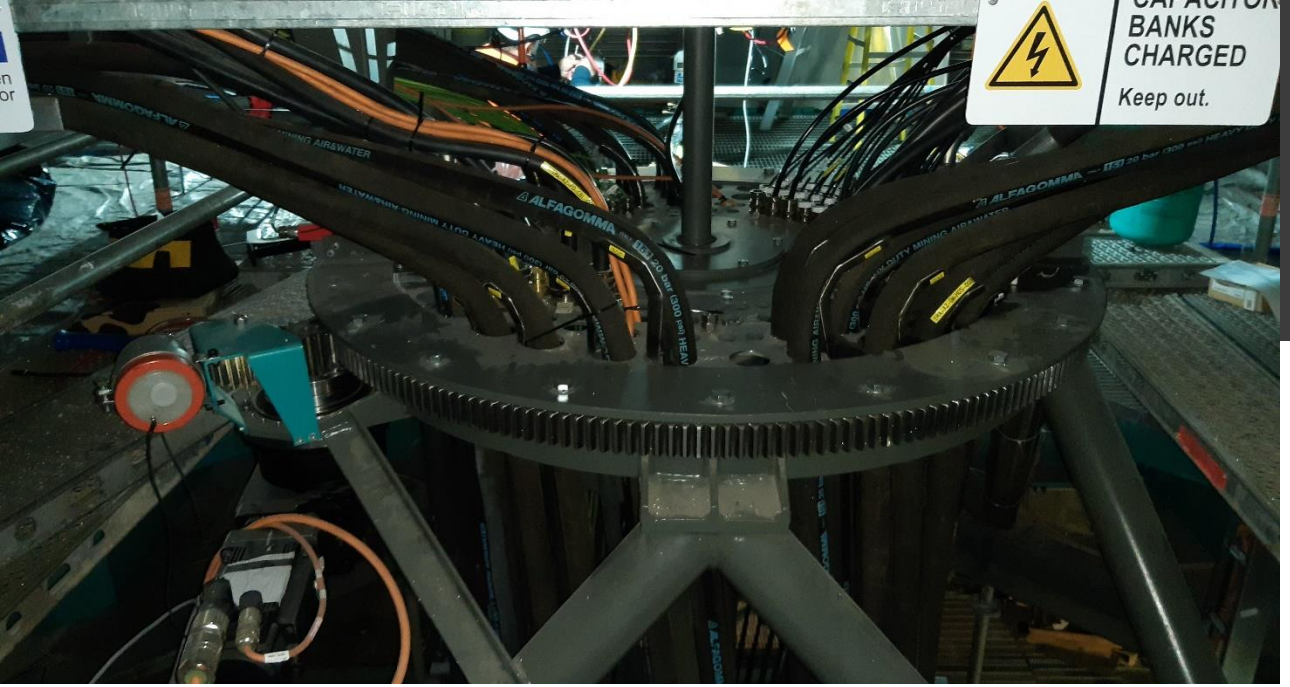

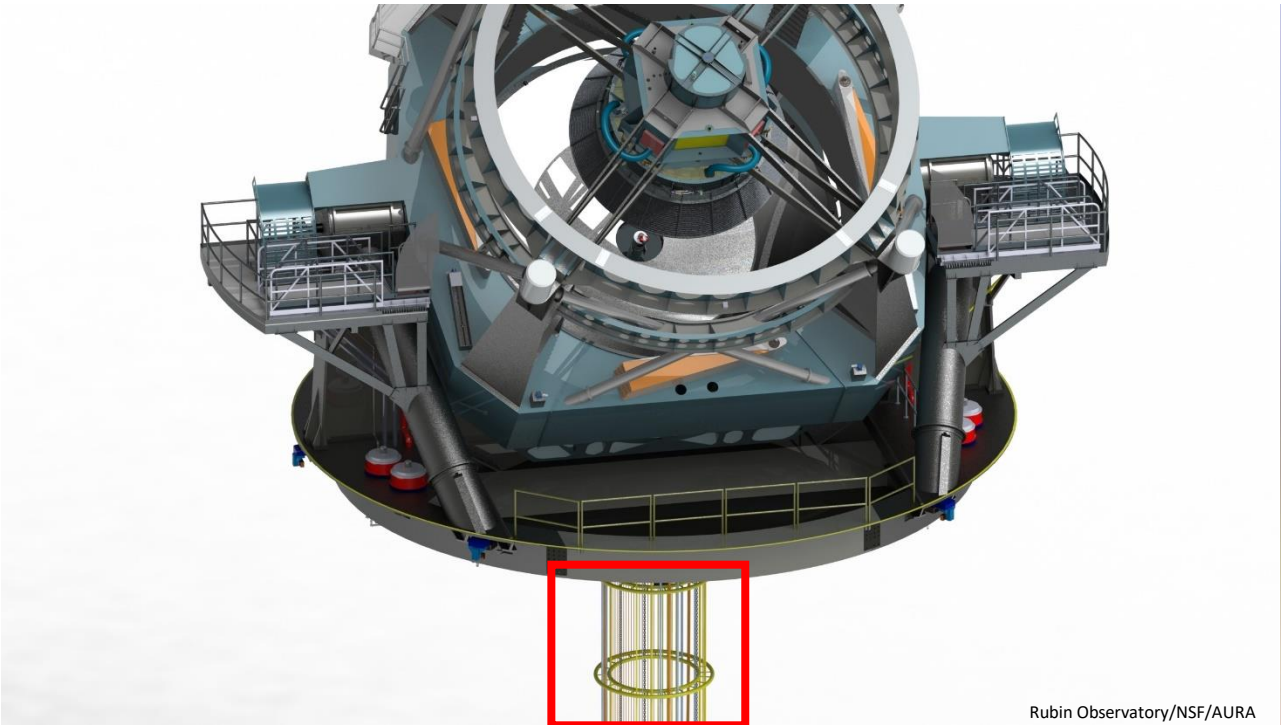

Azimuth Cable Wrap (ACW)

- Location: level 7 (under the TMA)
- Purpose: follow azimuths rotation and guide the cables
- Additional info:
  - 2 bosch motors for redundancy, only uses 1 at a time
  - single drive for these 2 motors inside the Main Cabinet (AZ-0001)
  - 2 deviation limits with AZ
  - 2 lubrication devices, 1 per pinion (motor)

Azimuth Cable Wrap (ACW)

- Location: level 7 (under the TMA)
- Purpose: follow azimuths rotation and guide the cables
- Additional info:
  - 2 bosch motors for redundancy, only uses 1 at a time
  - single drive for these 2 motors inside the Main Cabinet (AZ-0001)
  - 2 deviation limits with AZ
  - 2 lubrication devices, 1 per pinion (motor)

©Tekniker

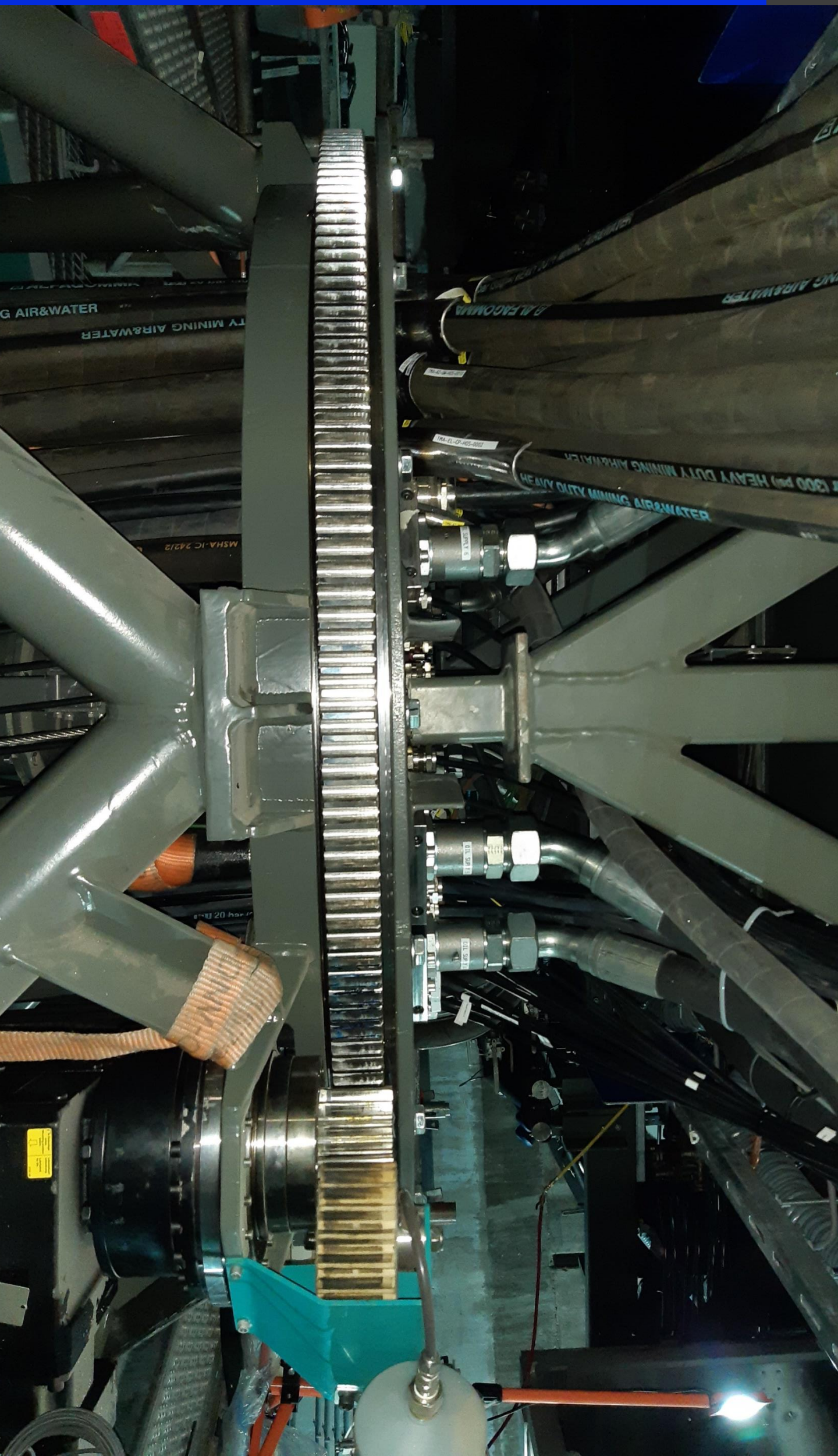
G AIR&WATER
TY MINING AIR&WATER
MSHA-IC 24212
HEAVY DUTY MINING AIR&WATER
TMA-EL-OP-HDS-0002
OIL SPLY
OIL SPLY

©Tekniker

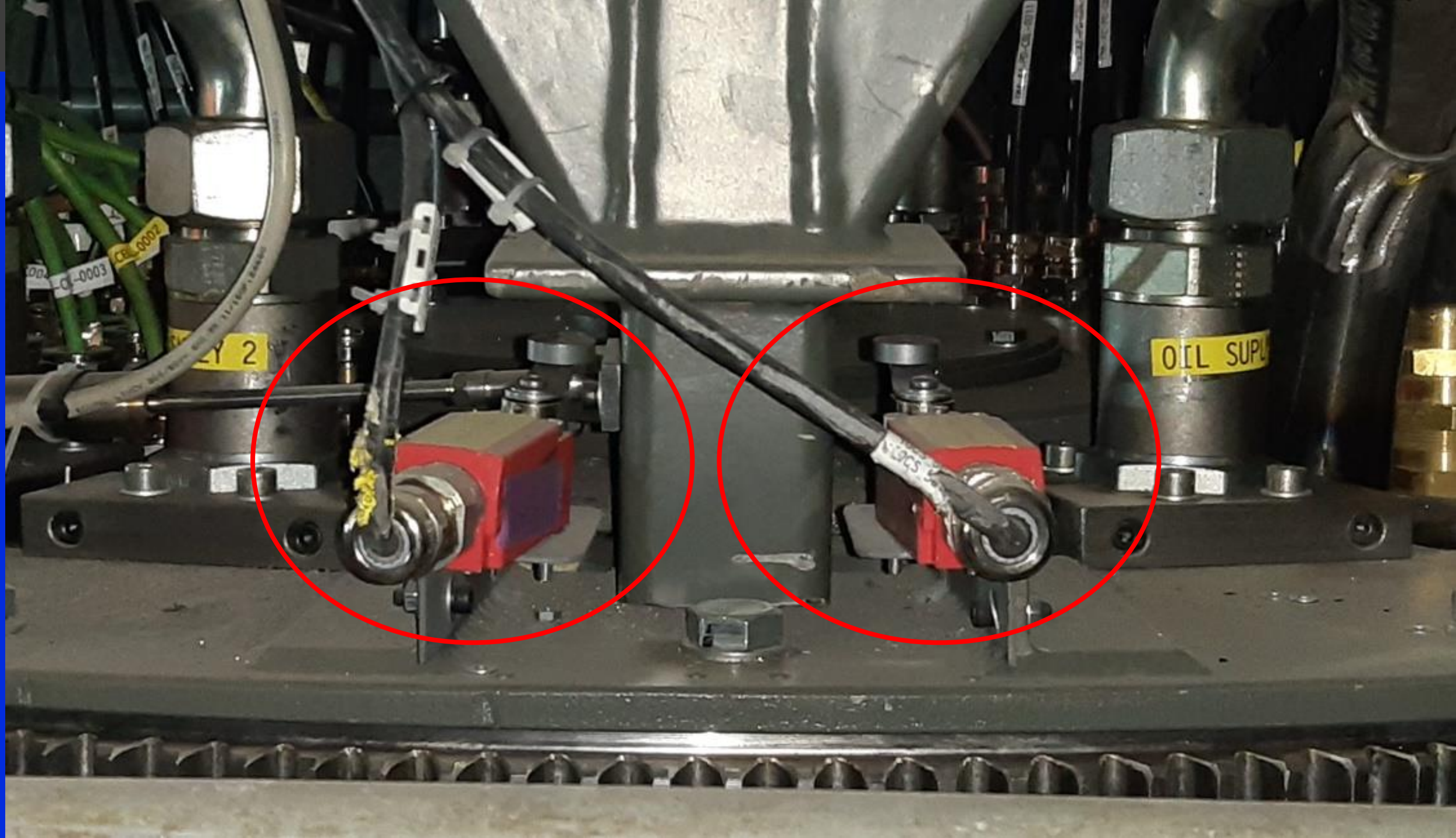

©Tekniker

12.7 c

AZIMUTH CABLE WRAP

HOME > MONITOR & CONTROL > MAIN AXIS > AZIMUTH SYSTEM > AZIMUTH CABLE WRAP

OPERATION MANAGER

status: Enable

SAFETY SYSTEM

local | GIS | ETPB | WD

Tekniker
MEMBER OF BASQUE RESEARCH & TECHNOLOGY ALLIANCE

MONITORING

AZIMUTH CABLE WRAP

status	position 1 deg	position 2 deg	Azimuth pos. deg
Idle	152.80	152.77	152.80

MAIN VIEW | CURRENT MOVE | MOVE HISTORY

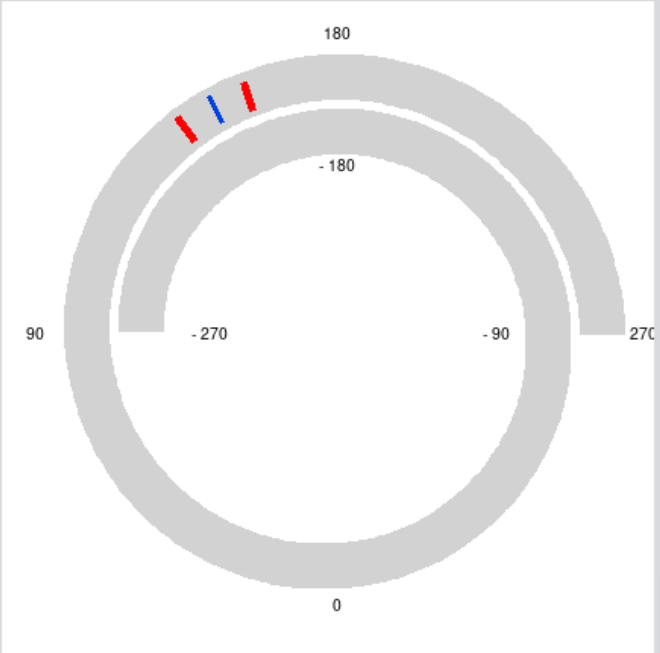

DRIVE 1

run/alarm

drive status: off

DRIVE 2

run/alarm

drive status: off

INTERLOCKS

active interlocks: Azimuth Cable Wrap Safety

CONTROL

ON | OFF | RESET ALARM

CABLE WRAP DRIVE SELECTOR

1 | 2

MOVE

position deg: -81.81

speed deg/s: 0.999983

MOVE | STOP

JOG

speed %

100 75 50 25 0

GENERAL
LOCAL

LOCAL: THERE ARE NO ALARMS OR WARNINGS

©Tekniker

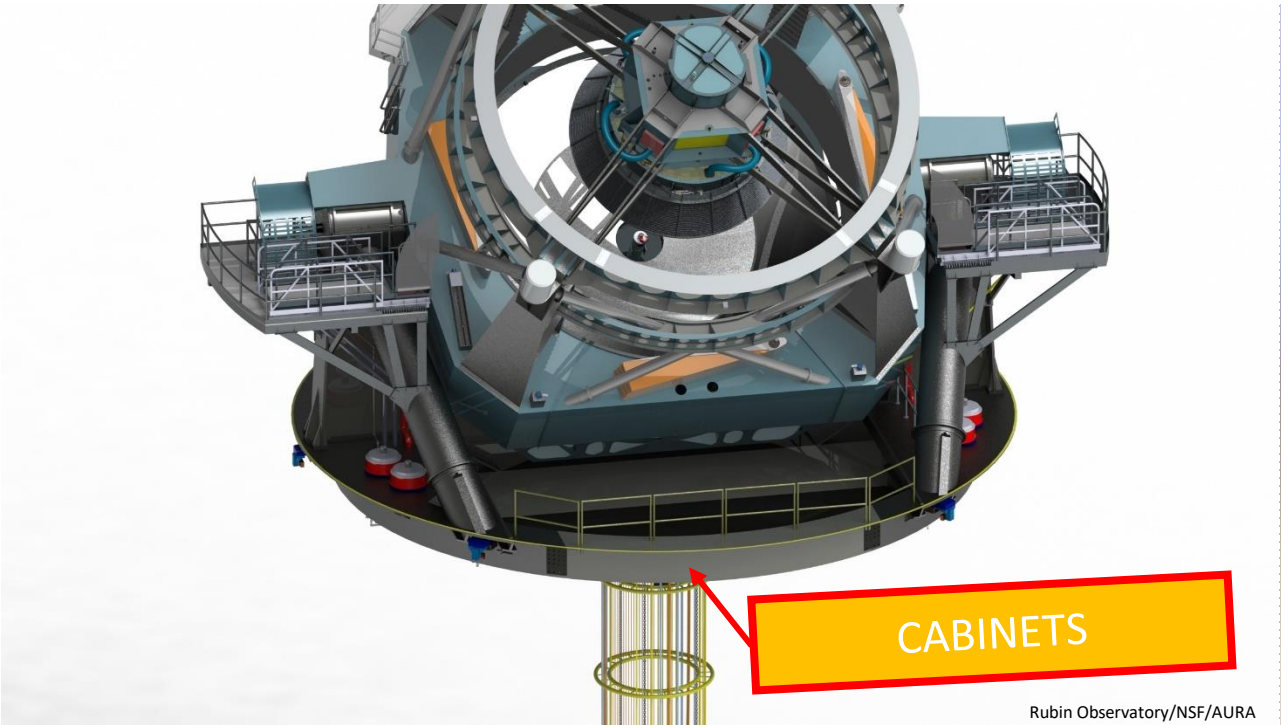

Capacitor Bank Cabinets (PHASE)

- Location: level 7 (under the TMA)
- Purpose: keep the DC bus for AZ and EL motors
- Additional info:
  - 8 identical cabinets containing the capacitors, these cabinets have LED indicators both locally and in the EUI
  - 1 cabinet for the capacitor charger
  - Other power distribution cabinets

Capacitor Bank Cabinets (PHASE)

- Location: level 7 (under the TMA)
- Purpose: keep the DC bus for AZ and EL motors
- Additional info:
  - 8 identical cabinets containing the capacitors, these cabinets have LED indicators both locally and in the EUI
  - 1 cabinet for the capacitor charger
  - Other power distribution cabinets

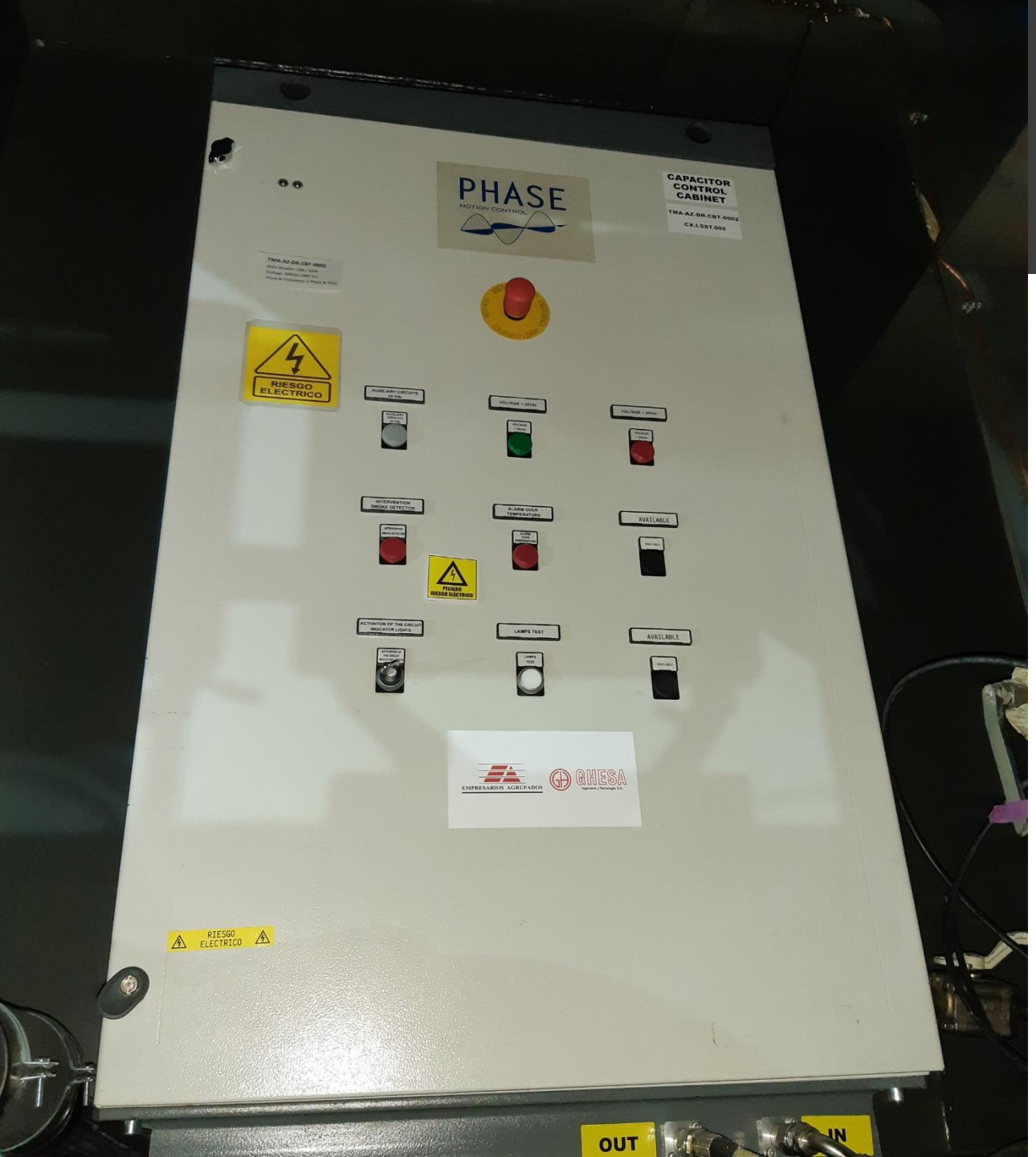

Capacitor Bank Cabinets (PHASE)

- Location: level 7 (under the TMA)
- Purpose: keep the DC bus for AZ and EL motors
- Additional info:
  - 8 identical cabinets containing the capacitors, these cabinets have LED indicators both locally and in the EUI
  - 1 cabinet for the capacitor charger
  - Other power distribution cabinets

Capacitor Bank Cabinets (PHASE)

- Location: level 7 (under the TMA)
- Purpose: keep the DC bus for AZ and EL motors
- Additional info:
  - 8 identical cabinets containing the capacitors, these cabinets have LED indicators both locally and in the EUI
  - 1 cabinet for the capacitor charger
  - Other power distribution cabinets

12.7 c

CAPACITOR BANKS

HOME > MONITOR & CONTROL > MAIN AXIS > CAPACITOR BANKS

OPERATION MANAGER
status
Enable

SAFETY SYSTEM
local GIS ETPB WD

Tekniker
MEMBER OF BASQUE RESEARCH & TECHNOLOGY ALLIANCE

MONITOR & CONTROL
MAIN AXES GENERAL VIEW
ELEVATION SYSTEM
AZIMUTH SYSTEM
OSS SYSTEM
AXES TRANSFER FUNCTION
AXES TRANSFER FUNCTION RESULTS
POWER SUPPLY
CAPACITOR BANKS

MONITORING

TMA-AZ-DR-CPB-0001	TMA-AZ-DR-CPB-0002	TMA-AZ-DR-CPB-0003	TMA-AZ-DR-CPB-0004
over temp.	over temp.	over temp.	over temp.
door open	door open	door open	door open
voltage over 25V	voltage over 25V	voltage over 25V	voltage over 25V
fuse	fuse	fuse	fuse
smoke	smoke	smoke	smoke

TMA-AZ-DR-CPB-0005	TMA-AZ-DR-CPB-0006	TMA-AZ-DR-CPB-0007	TMA-AZ-DR-CPB-0008
over temp.	over temp.	over temp.	over temp.
door open	door open	door open	door open
voltage over 25V	voltage over 25V	voltage over 25V	voltage over 25V
fuse	fuse	fuse	fuse
smoke	smoke	smoke	smoke

1/1

GENERAL
LOCAL

LOCAL: THERE ARE NO ALARMS OR WARNINGS

©Tekniker

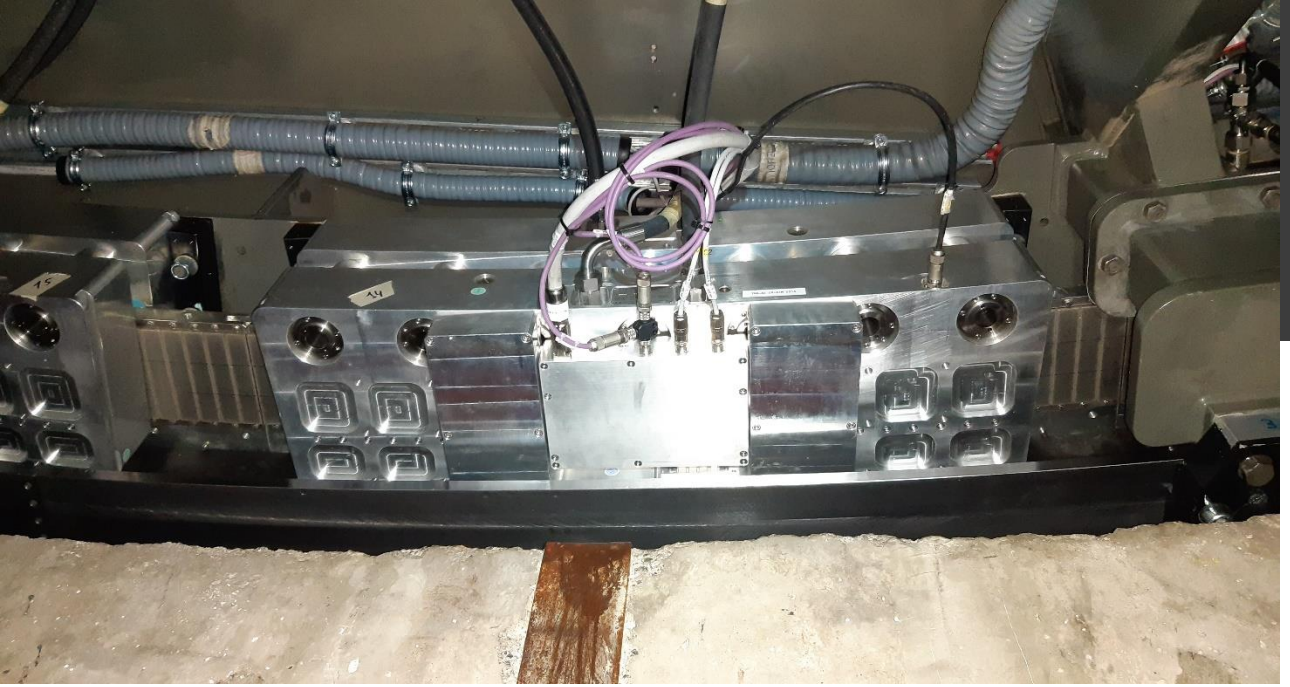

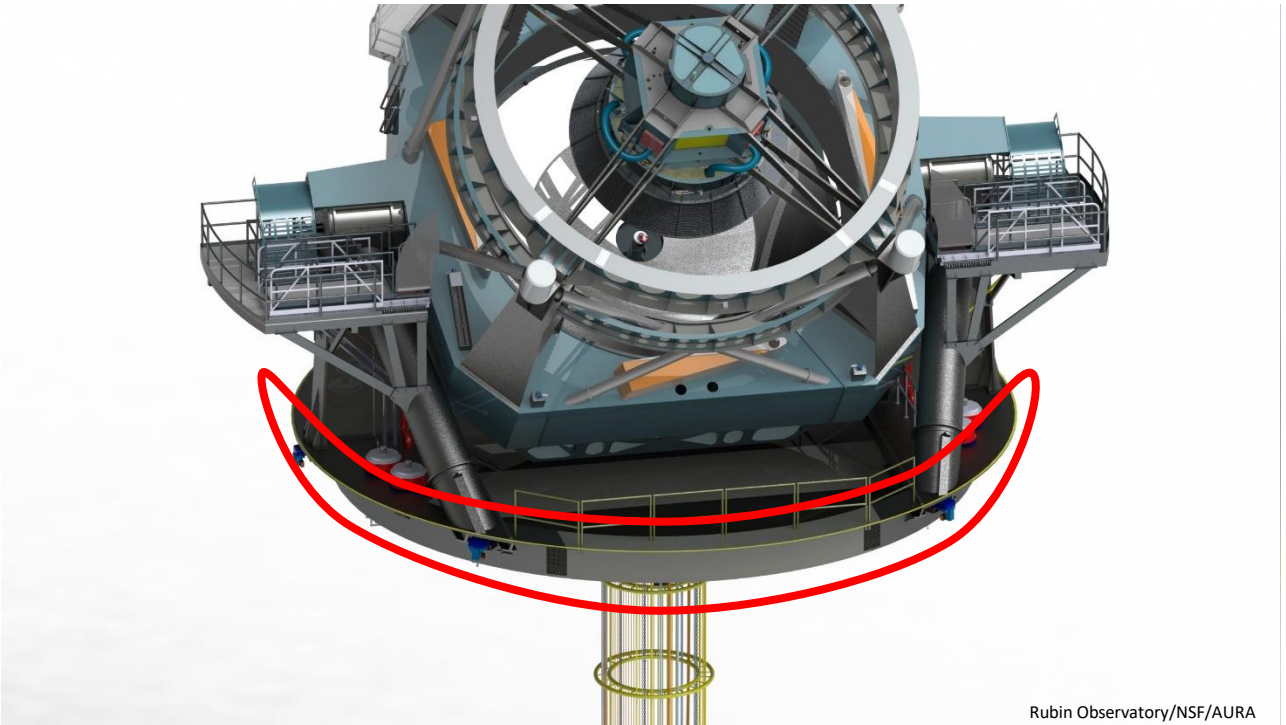

Azimuth Drives

- Location: level 7 (under the TMA)
- Purpose: rotate azimuth axis
- Additional info:
  - 16 motors which can be individually controlled
  - 1 hall effect sensor for electrical angle measurement

©Tekniker

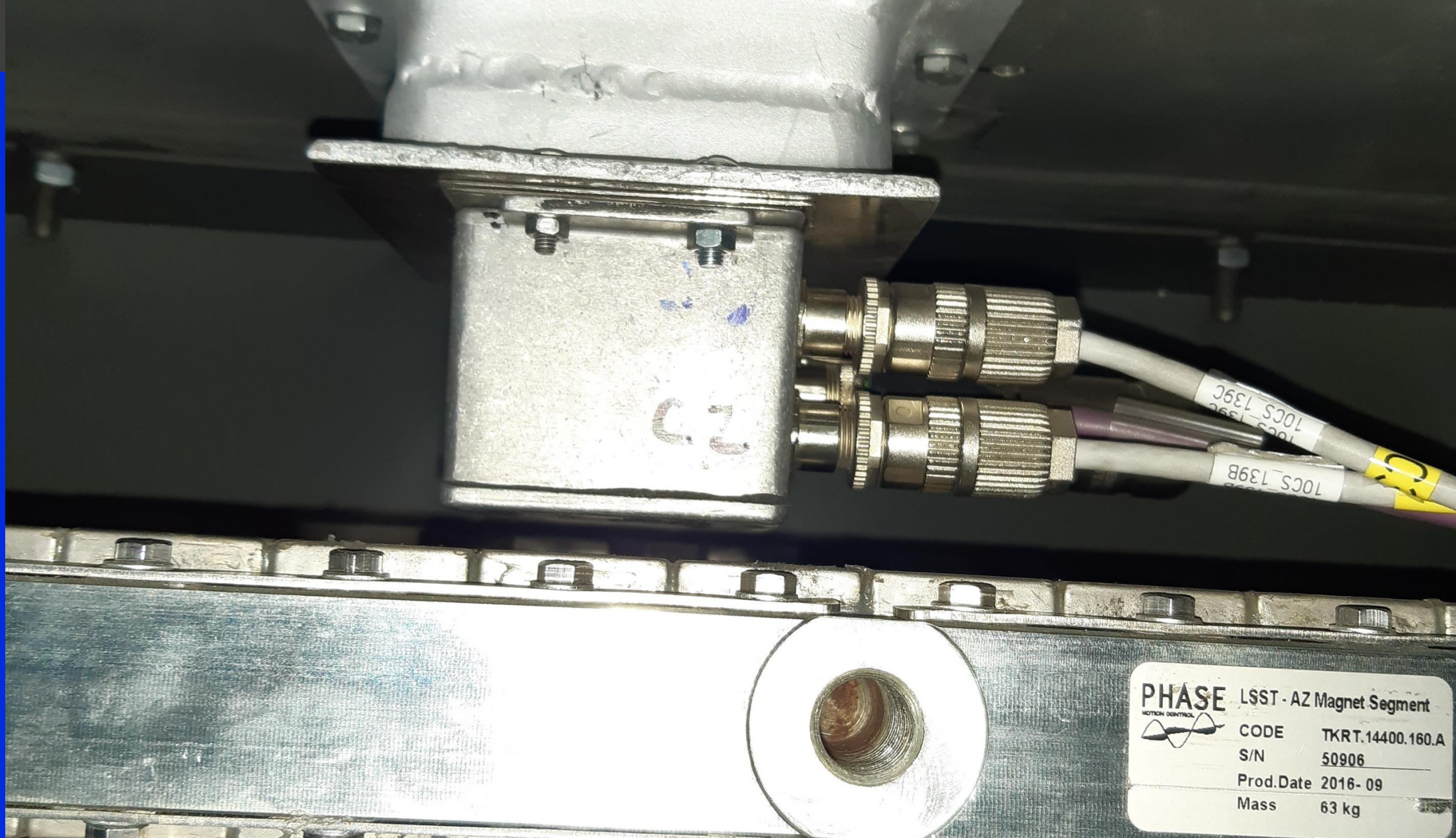
PHASE
MOTION CONTROL
LSST - AZ Magnet Segment
CODE TKRT.14400.160.A
S/N 50906
Prod.Date 2016- 09
Mass 63 kg
10CS_139B
10CS_139C

©Tekniker

12.7 c

AZIMUTH DRIVES

HOME > MONITOR & CONTROL > MAIN AXIS > AZIMUTH SYSTEM > AZIMUTH DRIVES

OPERATION MANAGER
status
Enable

SAFETY SYSTEM
local | GIS | ETPB | WD

Tekniker
MEMBER OF BASQUE RESEARCH & TECHNOLOGY ALLIANCE

MAIN AXES
AZIMUTH GENERAL VIEW
AZIMUTH CABLE WRAP
AZIMUTH DRIVES

MONITORING

STATUS | VALUES

GROUP 1
drive 1 status: Disabled
drive 2 status: Disabled
drive 3 status: Disabled
drive 4 status: Disabled

GROUP 2
drive 1 status: Disabled
drive 2 status: Disabled
drive 3 status: Disabled
drive 4 status: Disabled

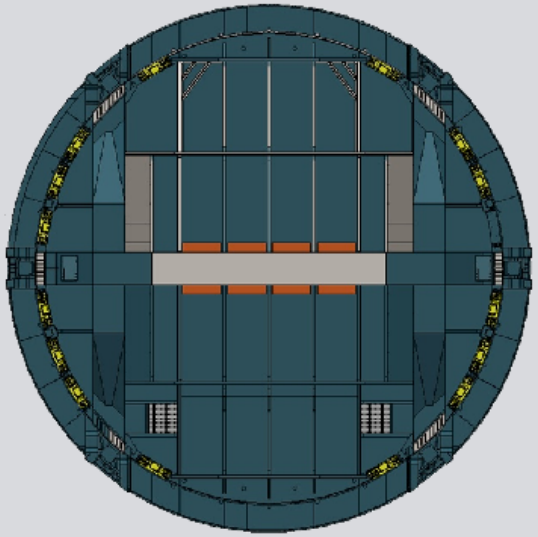

GROUP 3
drive 1 status: Disabled
drive 2 status: Disabled
drive 3 status: Disabled
drive 4 status: Disabled

GROUP 4
drive 1 status: Disabled
drive 2 status: Disabled
drive 3 status: Disabled
drive 4 status: Disabled

CONTROL

RESET ALL DRIVES

DRIVE SELECTION

GROUP 1: 1 2 3 4
GROUP 2: 1 2 3 4
GROUP 3: 1 2 3 4
GROUP 4: 1 2 3 4

DRIVE CONTROL

ON | OFF | RESET DRIVE

1/1

GENERAL
LOCAL

LOCAL: THERE ARE NO ALARMS OR WARNINGS

©Tekniker

2.7 c

AZIMUTH DRIVES THERMAL

HOME > MONITOR & CONTROL > THERMAL SYSTEM > AZIMUTH DRIVES THERMAL

OPERATION MANAGER
status
Enable

SAFETY SYSTEM
local GIS ETPB WD

Tekniker
MEMBER OF BASQUE RESEARCH & TECHNOLOGY ALLIANCE
Rubi Observat

MONITOR & CONTROL
THERMAL GENERAL VIEW
AZIMUTH DRIVES THERMAL
ELEVATION DRIVES THERMAL
MAIN CABINET
TOP END CHILLER SYSTEM
AUXILIARY BOXES
CABINET 0101
1/1

MONITORING

CURRENT VALUES | HISTORIC VALUES

GROUP 1
status: TrackingAmbient

setpoint	Cdeg
	11.7
1	Cdeg
	10.3
2	Cdeg
	10.3
3	Cdeg
	10.3
4	Cdeg
	10.2

GROUP 2
status: TrackingAmbient

setpoint	Cdeg
	11.7
5	Cdeg
	10.5
6	Cdeg
	10.6
7	Cdeg
	10.5
8	Cdeg
	10.6

GROUP 3
status: TrackingAmbient

setpoint	Cdeg
	11.7
9	Cdeg
	10.4
10	Cdeg
	10.5
11	Cdeg
	10.6
12	Cdeg
	10.7

GROUP 4
status: TrackingAmbient

setpoint	Cdeg
	11.7
13	Cdeg
	10.7
14	Cdeg
	10.8
15	Cdeg
	10.8
16	Cdeg
	10.8

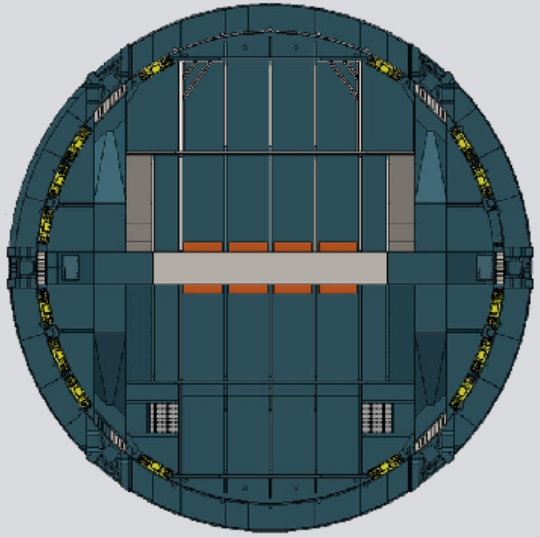

INTERLOCKS
active interlocks

CONTROL

GROUP SELECTION
ALL | 1 | 2 | 3 | 4

GROUP POWER
ON | OFF | RESET ALARM

TRACKING TEMPERATURE
temp. setpoint Cdeg
0
TRACK SETPOINT | TRACK AMBIENT

VALVE MANUAL POSITION
valve setpoint
0
MANUAL

GENERAL
LOCAL

LOCAL: THERE ARE NO ALARMS OR WARNINGS

©Tekniker

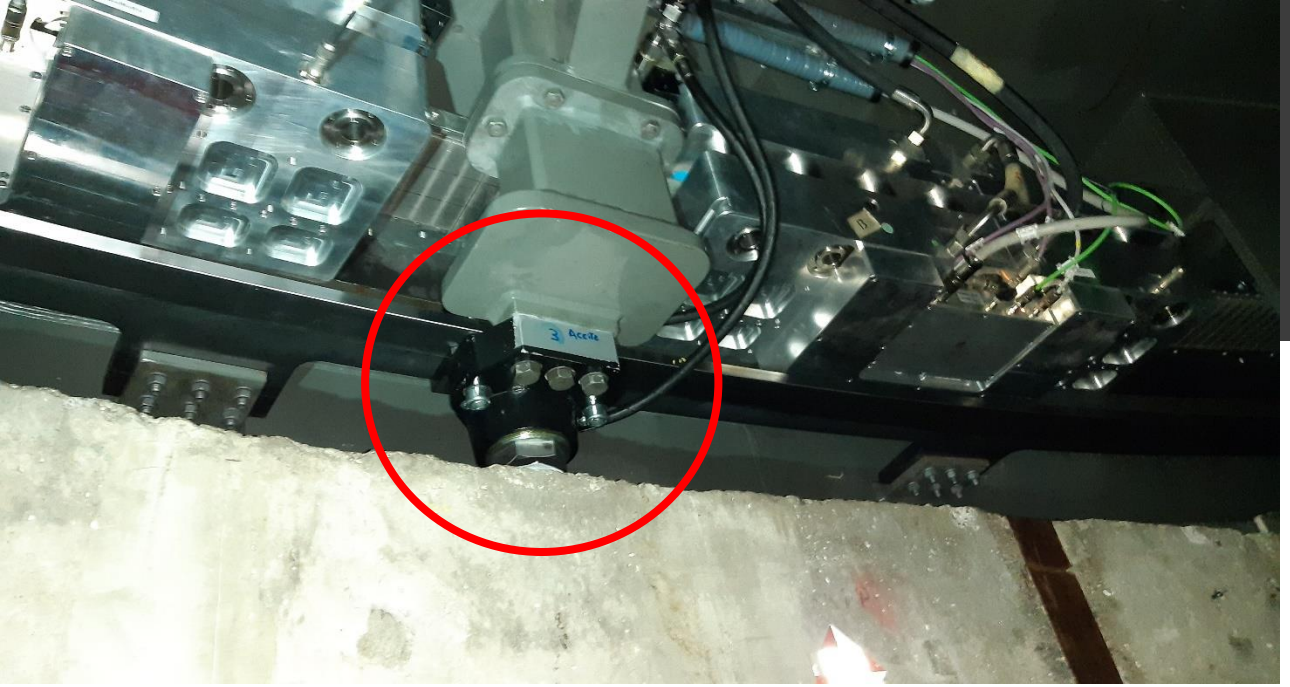

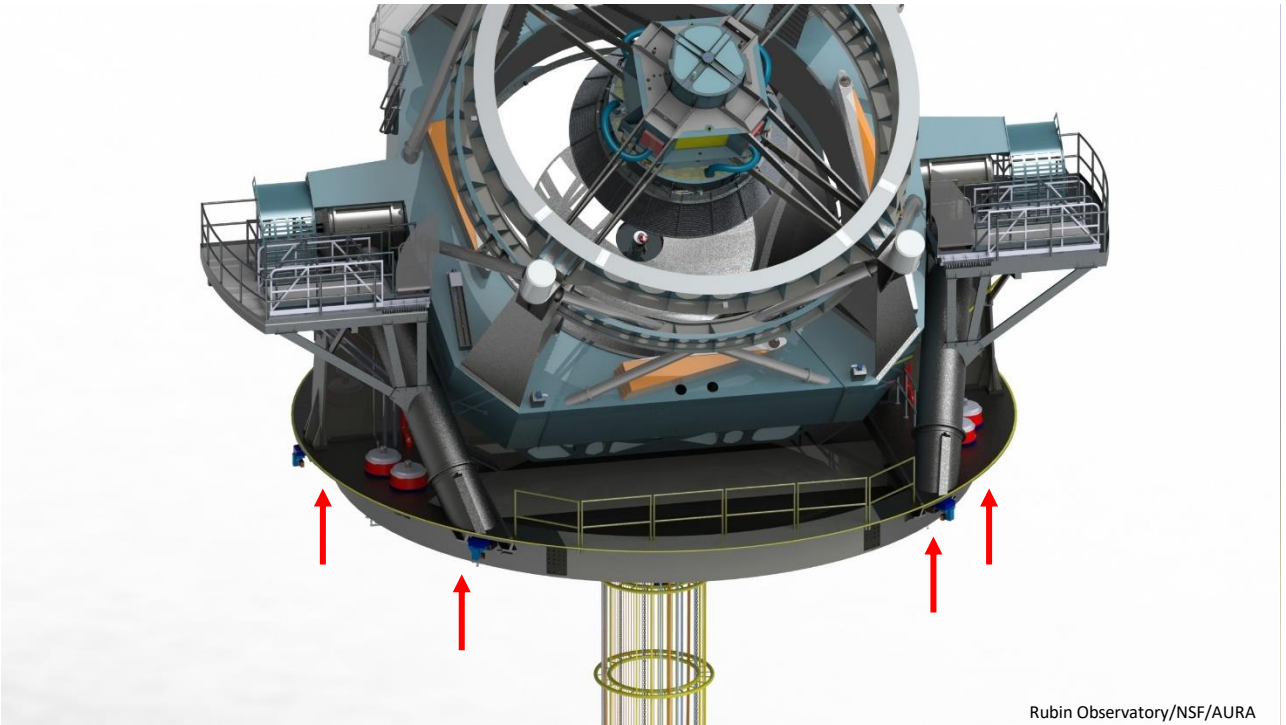

Azimuth Brakes

- Location: level 7 (under the TMA)
- Purpose: emergency stop azimuth axis
- Additional info:
  - 8 brakes
  - normally closed
  - use oil supply to be released

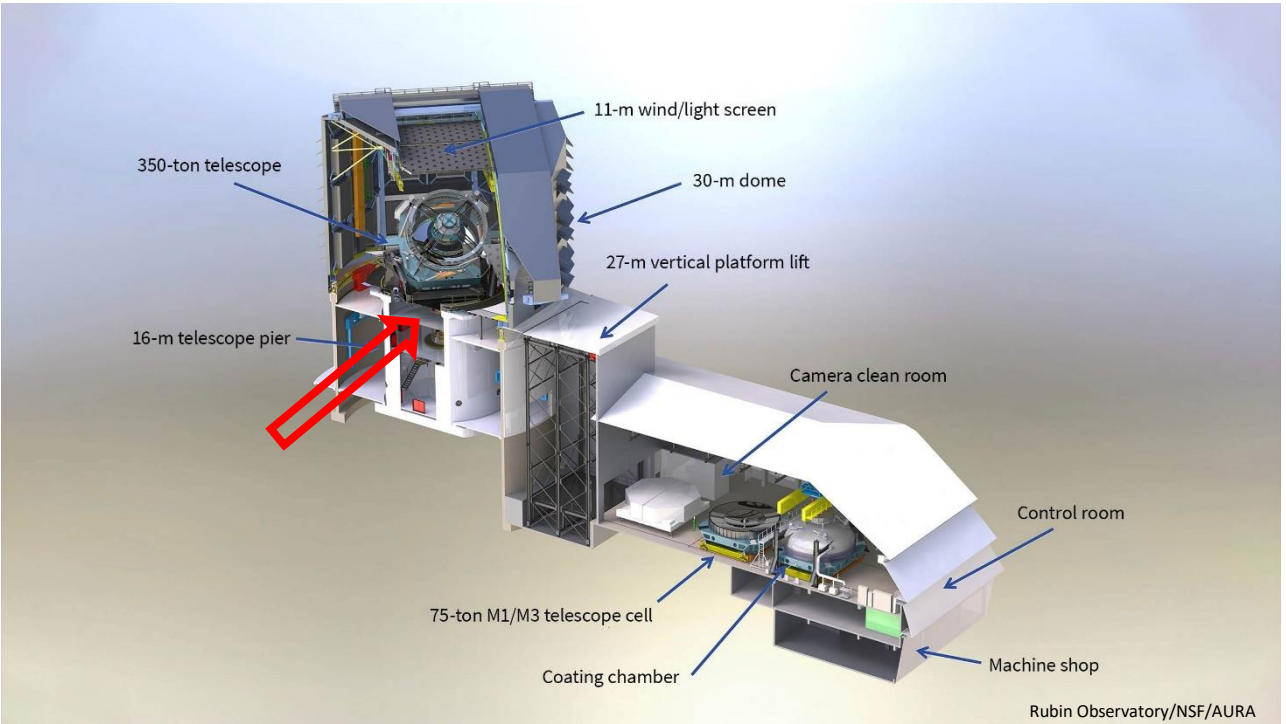

Azimuth Limit Switches and Topple Block

- Location: level 7 (under the TMA)
- Purpose: limit the range
- Additional info:
  - 2 safety limits -> TMA IS
  - 2 hardware limits -> TMA PXI
  - Limits and topple block work together, as AZ has a range of +/- 270 deg, the position of the topple block affects the activation of the limit

©Tekniker

©Tekniker

ZCY
19
Telemecanique

SUP. A
A

ZCY
19

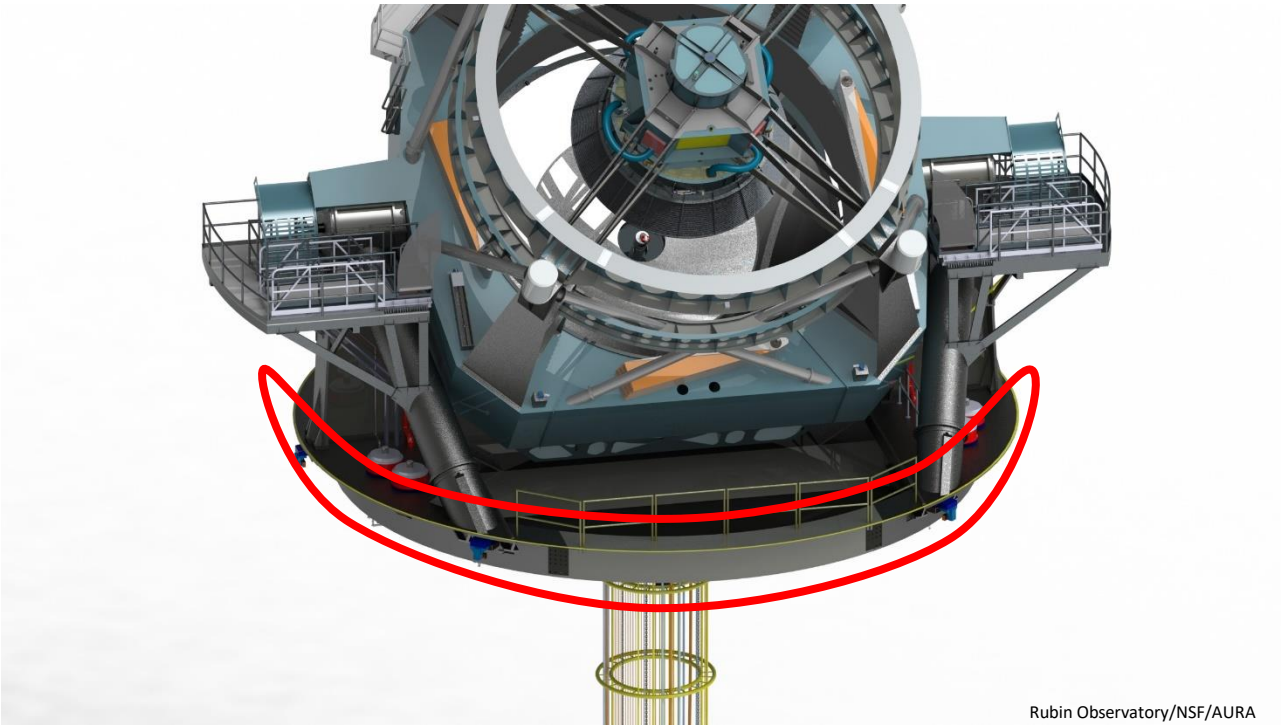

Azimuth Encoder Tape and Heads

- Location: level 7 (around the TMA)
- Purpose: measure the rotation of AZ
- Additional info:
  - 1 single piece tape around the hole perimeter
  - 4 measuring heads -> EIB

©Tekniker

©Tekniker

©Tekniker

2.7 c

ENCODER

HOME > MONITOR & CONTROL > MAIN AXIS > ENCODER

OPERATION MANAGER
status
Enable

SAFETY SYSTEM
local GIS ETPB WD

Tekniker
MEMBER OF BASQUE RESEARCH & TECHNOLOGY ALLIANCE
Rubi Observat

MONITOR & CONTROL

CODER STEM

MONITORING

ENCODER

status
Idle

AZ axis power

EL axis power

	AZ HEAD 1	AZ HEAD 2	EL HEAD 1	EL HEAD 2
status	0	0	0	0
relative position deg	0.00000000	0.00000000	0.00000000	0.00000000
absolute position deg	0.00000000	0.00000000	0.00000000	0.00000000
telescope position deg	0.00000000	0.00000000	0.00000000	0.00000000
read reference iu	0	0	0	0
searching reference				

	AZ HEAD 3	AZ HEAD 4	EL HEAD 3	EL HEAD 4
status	0	0	0	0
relative position deg	0.00000000	0.00000000	0.00000000	0.00000000
absolute position deg	0.00000000	0.00000000	0.00000000	0.00000000
telescope position deg	0.00000000	0.00000000	0.00000000	0.00000000
read reference iu	0	0	0	0
searching reference				

CONTROL

AXES SELECTOR

AZIMUTH | ELEVATION

AXES COMMANDS

ON | OFF | RESET ALARM

REFERENCE START | REFERENCE STOP

CLEAR HEADS ERROR

ENCODER HARDWARE SPECIFIC

REBOOT ENCODER HARDWARE

2/2

GENERAL
LOCAL

LOCAL: THERE ARE NO ALARMS OR WARNINGS

©Tekniker

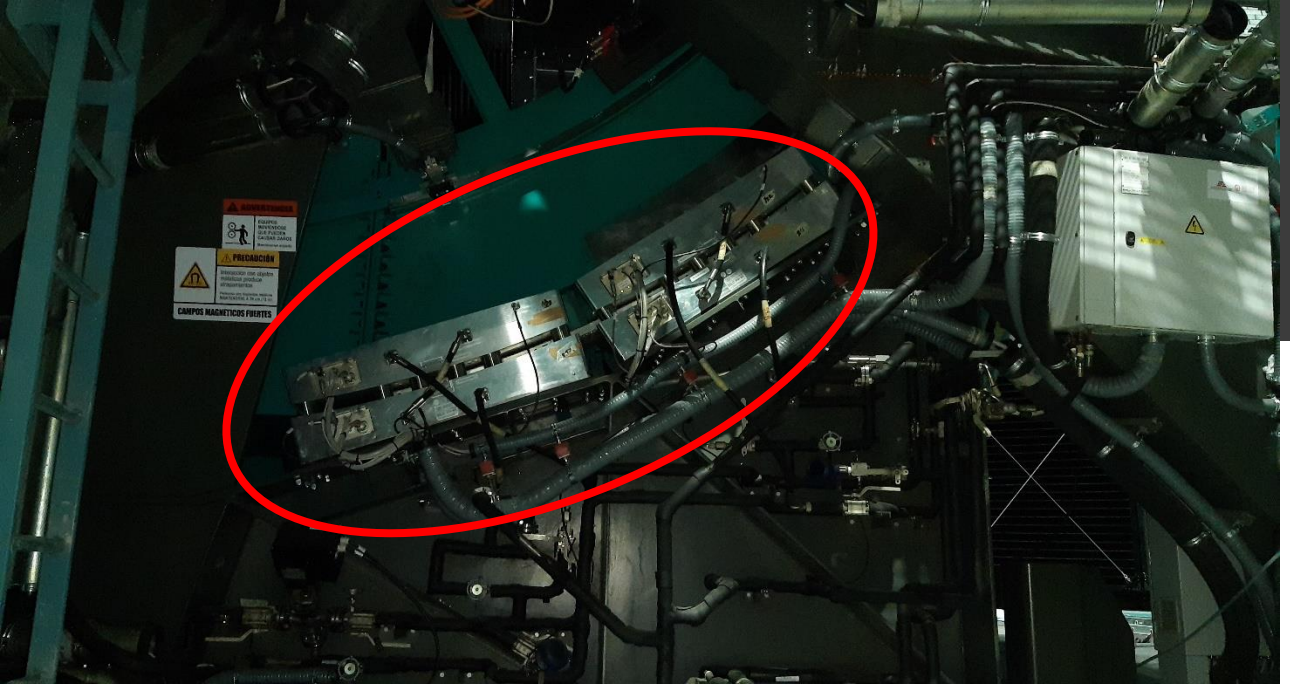

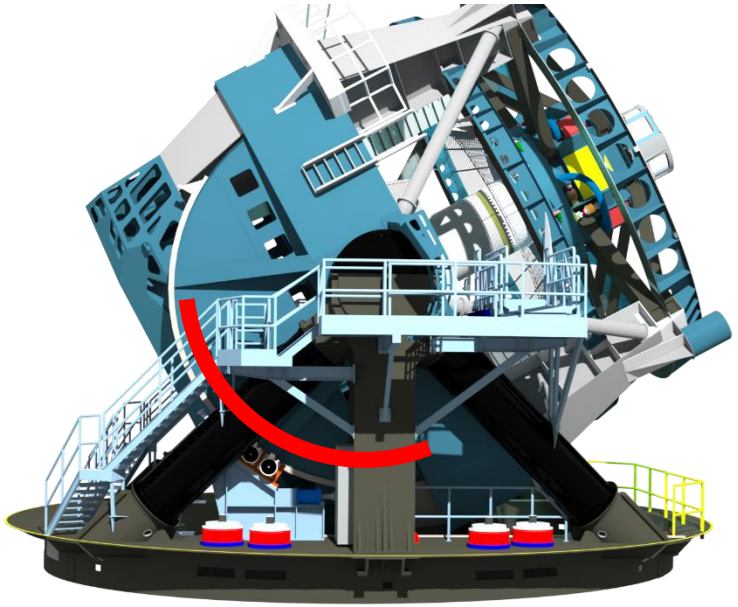

Rubin Observatory/NSF/AURA

Elevation Drives

- Location: TMA elevation supports
- Purpose: rotate elevation axis
- Additional info:
  - 12 motors which can be individually controlled
  - 2 hall effect sensor for electrical angle measurement, one per side affecting the corresponding 6 motors

©Tekniker

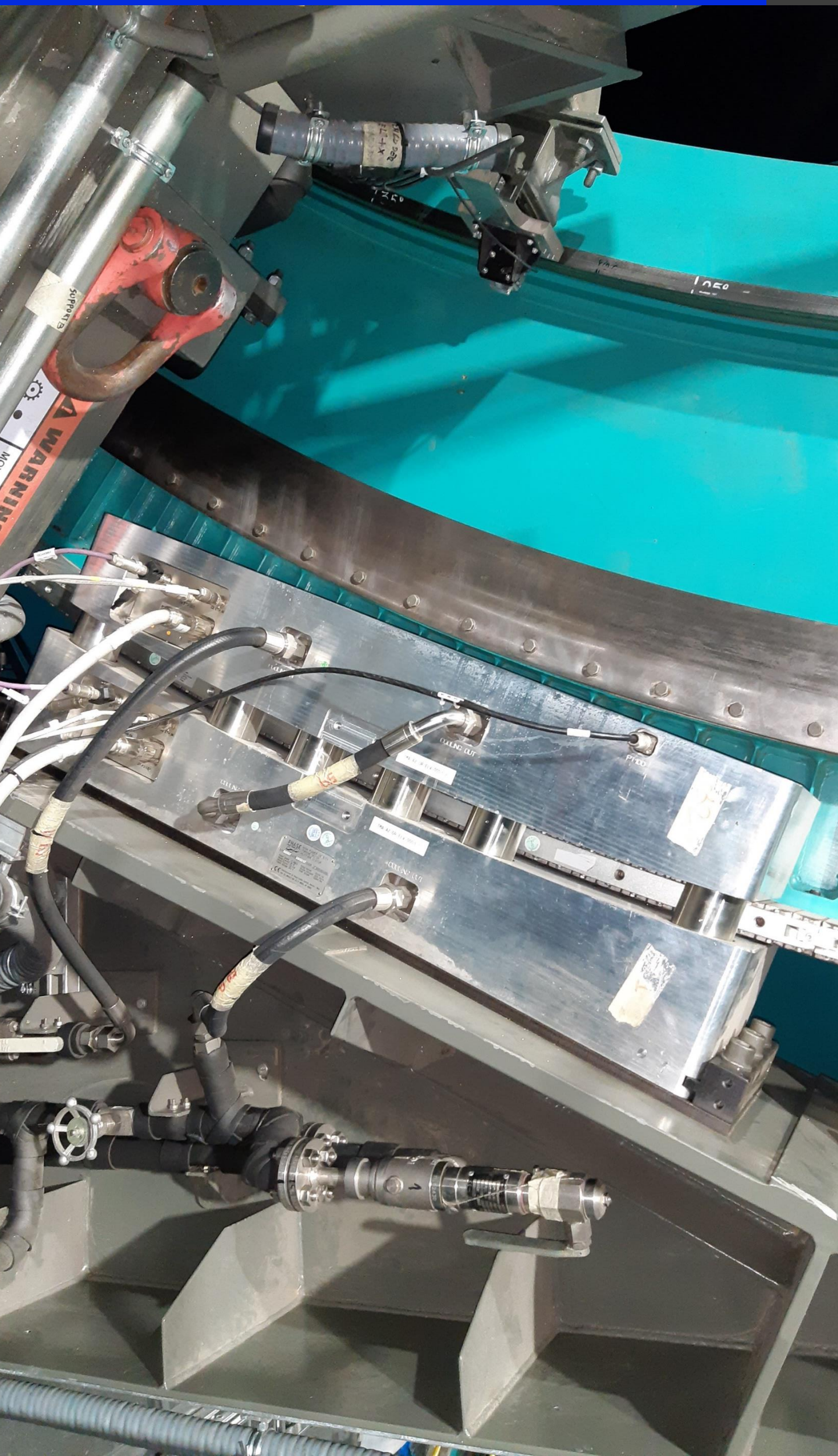

©Tekniker

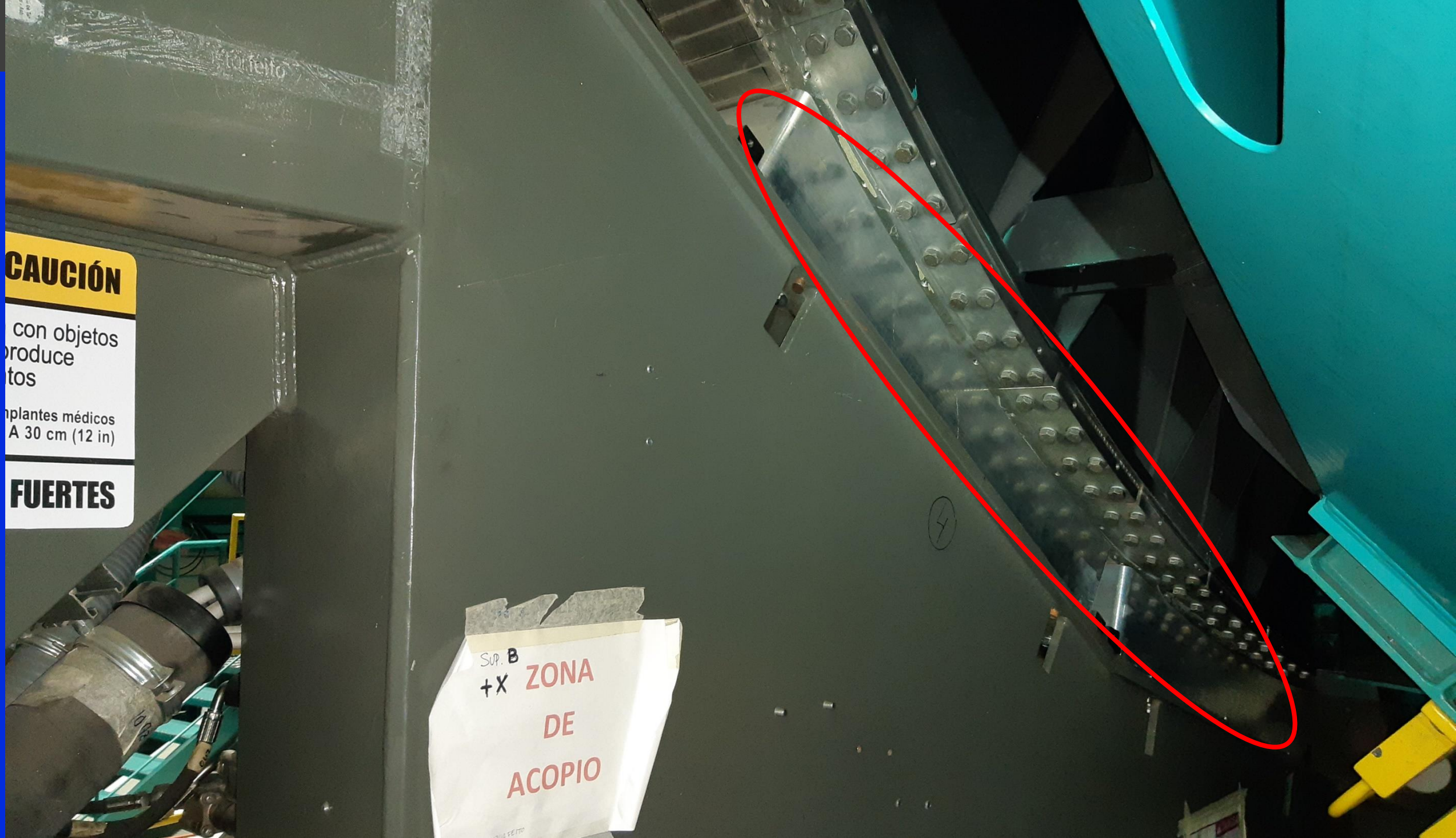
CAUCIÓN
con objetos
produce
tos
nplantes médicos
A 30 cm (12 in)
FUERTES
SUP. B
+X
ZONA
DE
ACOPIO

©Tekniker

©Tekniker

2.7 c

ELEVATION DRIVES

HOME > MONITOR & CONTROL > MAIN AXIS > ELEVATION SYSTEM > ELEVATION DRIVES

OPERATION MANAGER

status
Enable

SAFETY SYSTEM

local GIS ETPB WD

Tekniker
MEMBER OF BASQUE RESEARCH & TECHNOLOGY ALLIANCE

Rubi Observat

MAIN AXES

ELEVATION GENERAL VIEW

ELEVATION DRIVES

LOCKING PINS

MONITORING

STATUS | VALUES

+ X

drive 1 status
Disabled

drive 2 status
Disabled

drive 3 status
Disabled

drive 4 status
Disabled

drive 5 status
Disabled

drive 6 status
Disabled

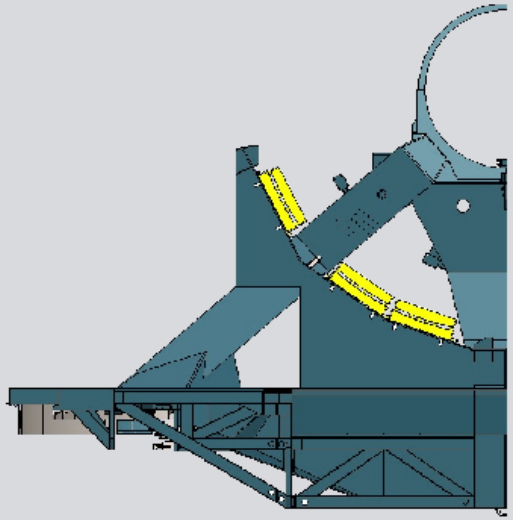

- X

drive 1 status
Disabled

drive 2 status
Disabled

drive 3 status
Disabled

drive 4 status
Disabled

drive 5 status
Disabled

drive 6 status
Disabled

CONTROL

RESET ALL DRIVES

DRIVES OPERATIONS

+ X

1	2
3	4
5	6

- X

1	2
3	4
5	6

ON | OFF | RESET DRIVE

1/1

GENERAL
LOCAL

LOCAL: THERE ARE NO ALARMS OR WARNINGS

©Tekniker

2.7 c

ELEVATION DRIVES THERMAL

HOME > MONITOR & CONTROL > THERMAL SYSTEM > ELEVATION DRIVES THERMAL

OPERATION MANAGER
status
Enable

SAFETY SYSTEM
local GIS ETPB WD

Tekniker
MEMBER OF BASQUE RESEARCH & TECHNOLOGY ALLIANCE
Rubi Observat

MONITOR & CONTROL
THERMAL GENERAL VIEW
AZIMUTH DRIVES THERMAL
ELEVATION DRIVES THERMAL
MAIN CABINET
TOP END CHILLER SYSTEM
AUXILIARY BOXES
CABINET 0101

MONITORING

CURRENT VALUES | HISTORIC VALUES

GROUP 2 (X-)

status
TrackingAmbient

setpoint	Cdeg
	11.7
8	Cdeg
	10.3
10	Cdeg
	10.2
12	Cdeg
	9.8

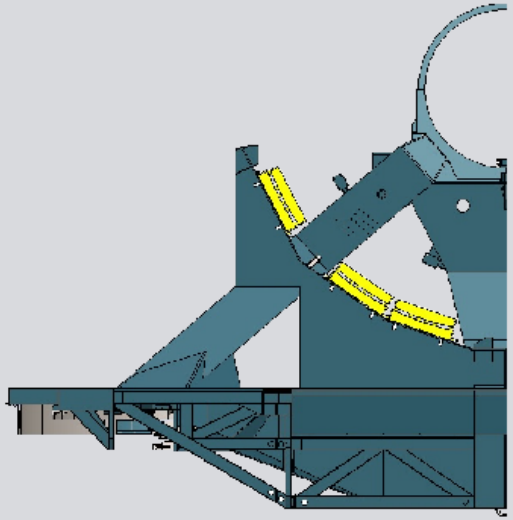

GROUP 1 (X+)

status
TrackingAmbient

setpoint	Cdeg
	11.7
2	Cdeg
	10.0
4	Cdeg
	9.9
6	Cdeg
	9.8

INTERLOCKS
active interlocks

CONTROL

GROUP SELECTION
ALL | X- | X+

GROUP POWER
ON | OFF | RESET ALARM

TRACKING TEMPERATURE
temp. setpoint Cdeg
0
TRACK SETPOINT | TRACK AMBIENT

VALVE MANUAL POSITION
valve setpoint
0
MANUAL

1/1

GENERAL
LOCAL

LOCAL: THERE ARE NO ALARMS OR WARNINGS

©Tekniker

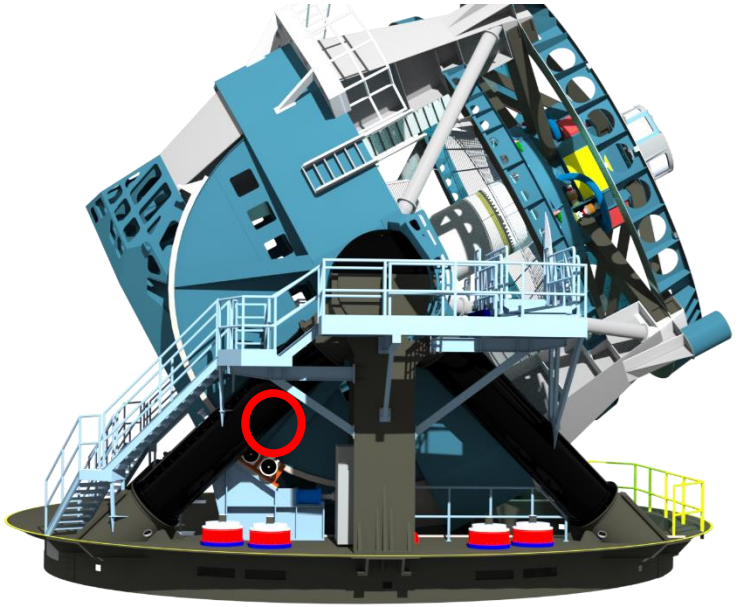

Elevation Brakes

- Location: TMA elevation supports
- Purpose: emergency stop elevation axis
- Additional info:
  - 2 brakes, 1 per side
  - normally closed
  - use oil supply to be released

Rubin Observatory/NSF/AURA

©Tekniker

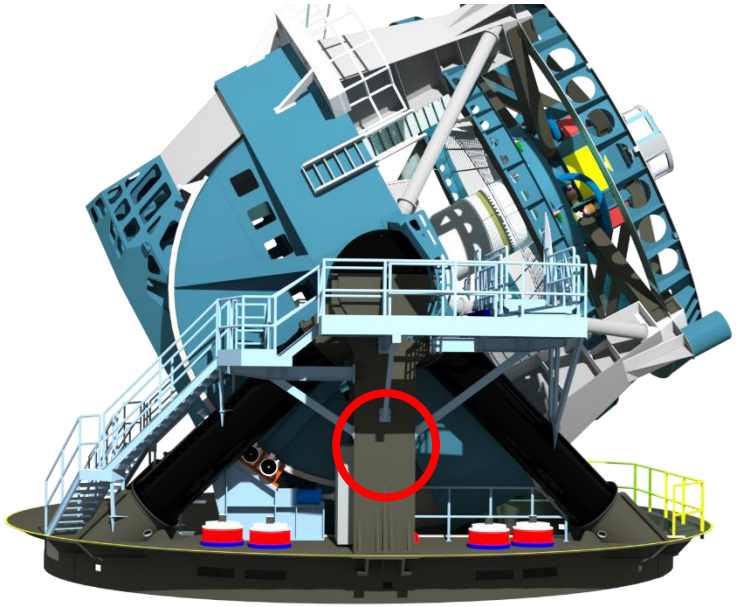

Elevation Limit Switches

- Location: TMA elevation supports
- Purpose: limit elevation range
- Additional info:
  - 2 safety limits -> TMA IS
  - 2 operational limits -> TMA PXI
  - 2 hardware limits -> TMA PXI

Rubin Observatory/NSF/AURA

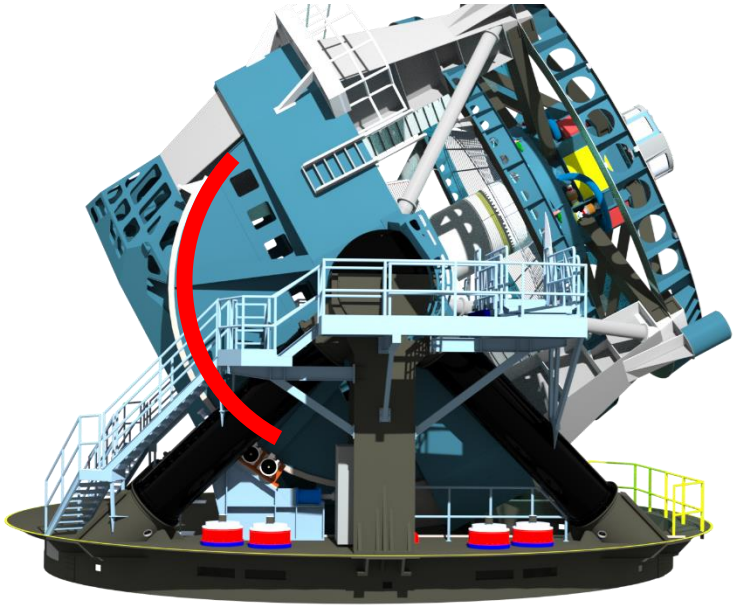

Elevation Encoder Tape and Heads

- Location: TMA elevation supports
- Purpose: measure the rotation of EL
- Additional info:
  - 2 individual tapes for each side
  - 4 measuring heads -> EIB

Rubin Observatory/NSF/AURA

©Tekniker

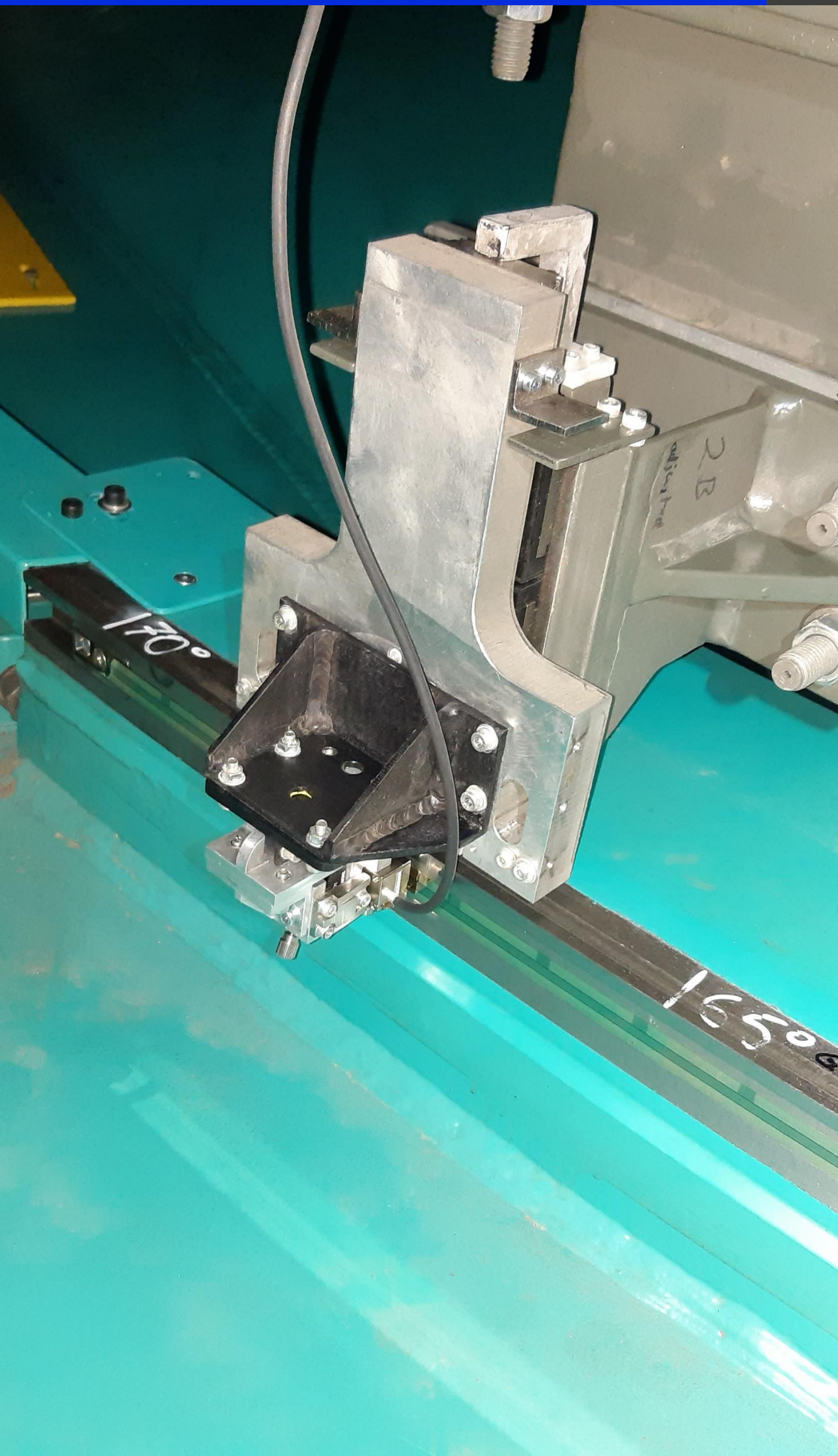

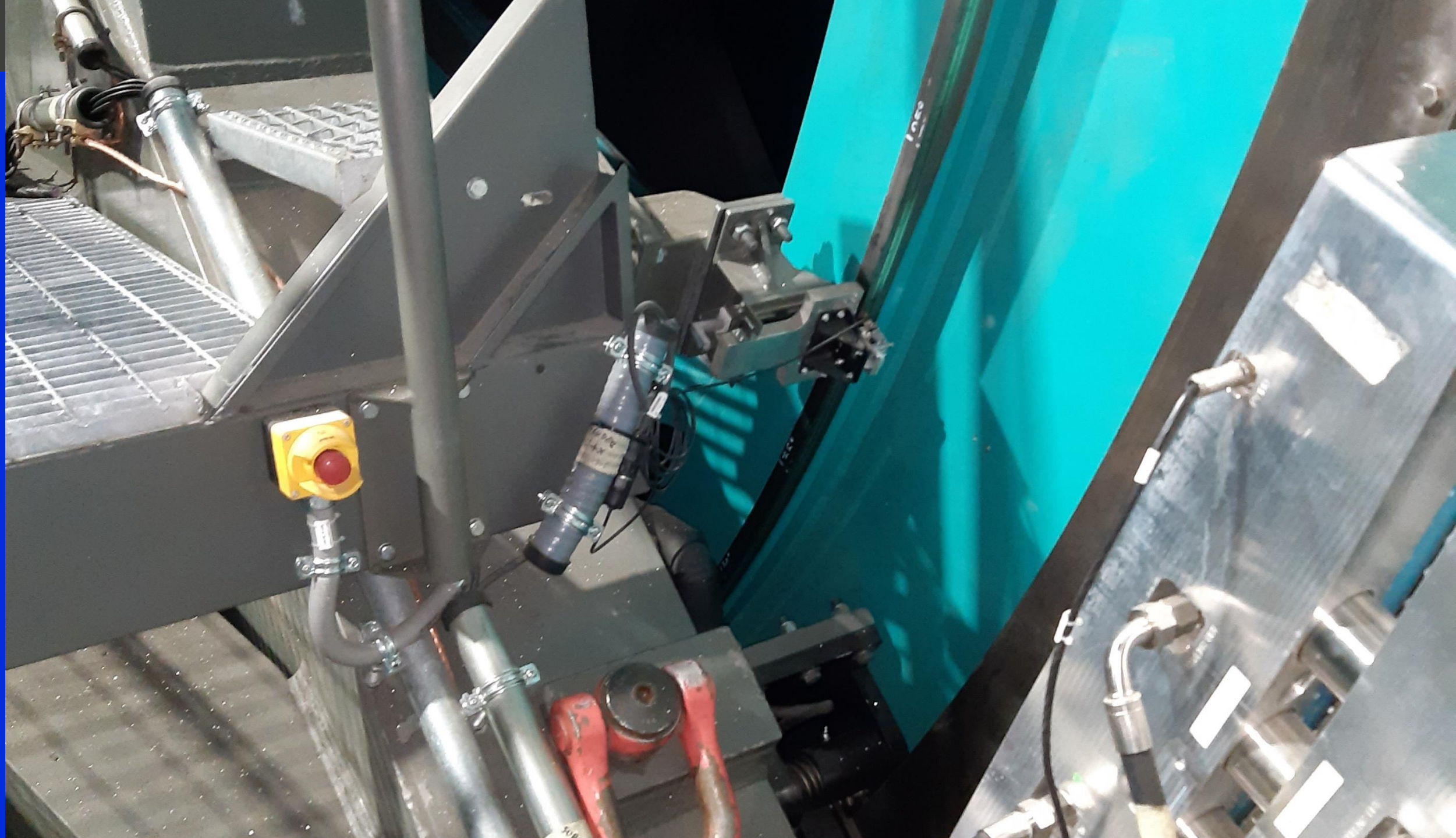

©Tekniker

2.7 c

MONITOR & CONTROL

ODER TEM

ENCODER

HOME > MONITOR & CONTROL > MAIN AXIS > ENCODER

OPERATION MANAGER

status: Enable

SAFETY SYSTEM

local | GIS | ETPB | WD

Tekniker — MEMBER OF BASQUE RESEARCH & TECHNOLOGY ALLIANCE

Rub Observa

MONITORING

ENCODER

status: Idle

AZ axis power

EL axis power

	AZ HEAD 1	AZ HEAD 2	AZ HEAD 3	AZ HEAD 4	EL HEAD 1	EL HEAD 2	EL HEAD 3	EL HEAD 4
status	0	0	0	0	0	0	0	0
relative position (deg)	0.00000000	0.00000000	0.00000000	0.00000000	0.00000000	0.00000000	0.00000000	0.00000000
absolute position (deg)	0.00000000	0.00000000	0.00000000	0.00000000	0.00000000	0.00000000	0.00000000	0.00000000
telescope position (deg)	0.00000000	0.00000000	0.00000000	0.00000000	0.00000000	0.00000000	0.00000000	0.00000000
read reference (iu)	0	0	0	0	0	0	0	0
searching reference								

CONTROL

AXES SELECTOR

AZIMUTH | ELEVATION

AXES COMMANDS

ON | OFF | RESET ALARM

REFERENCE START | REFERENCE STOP

CLEAR HEADS ERROR

ENCODER HARDWARE SPECIFIC

REBOOT ENCODER HARDWARE

Resets the system alarms.

2/2

GENERAL

LOCAL

LOCAL: THERE ARE NO ALARMS OR WARNINGS

©Tekniker

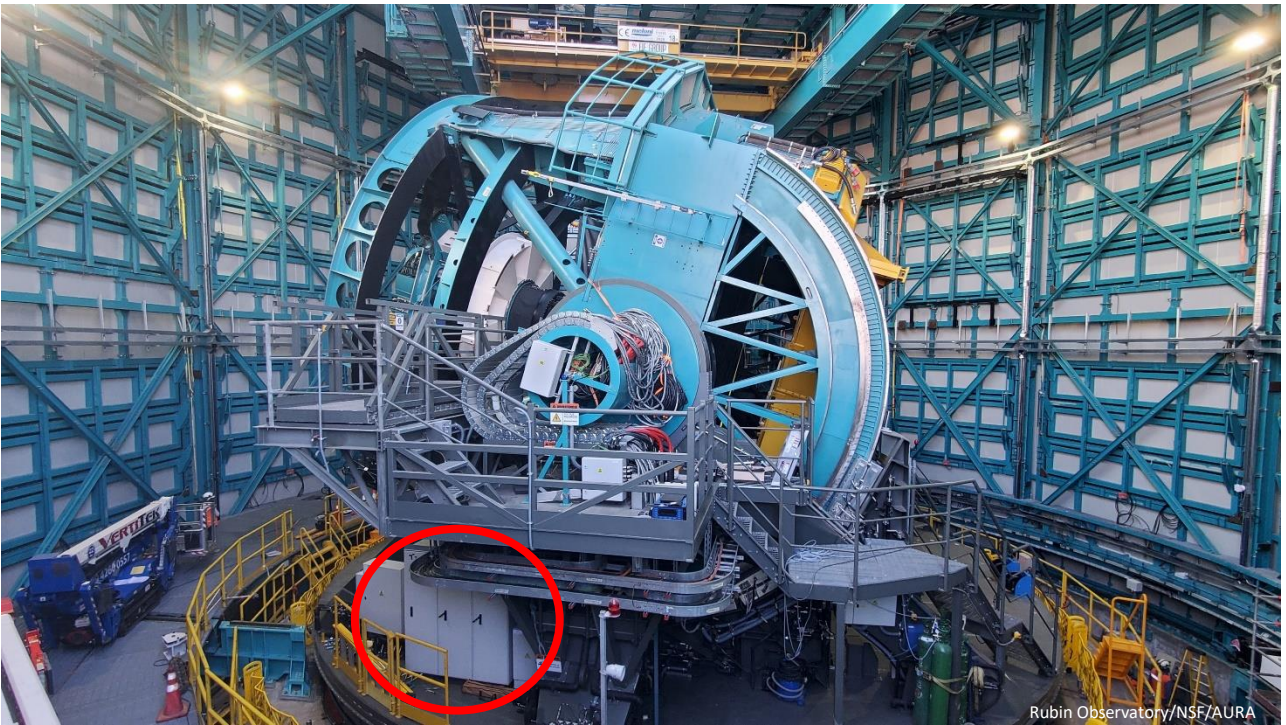

Main Cabinet (AZ-0001)

- Location: TMA Azimuth platform
- Purpose: contains the main controllers for the TMA.
  - PXIs: TMA, AUX and AXES
  - Bosch controller + drives (ACW,CCW)
  - Safety controller, TMA IS
  - Ethercat I/O module
  - Ethercat drives line start, cRIO
  - EIB, one for both AZ and EL
  - Thermal control
  - Ethernet switches

©Tekniker

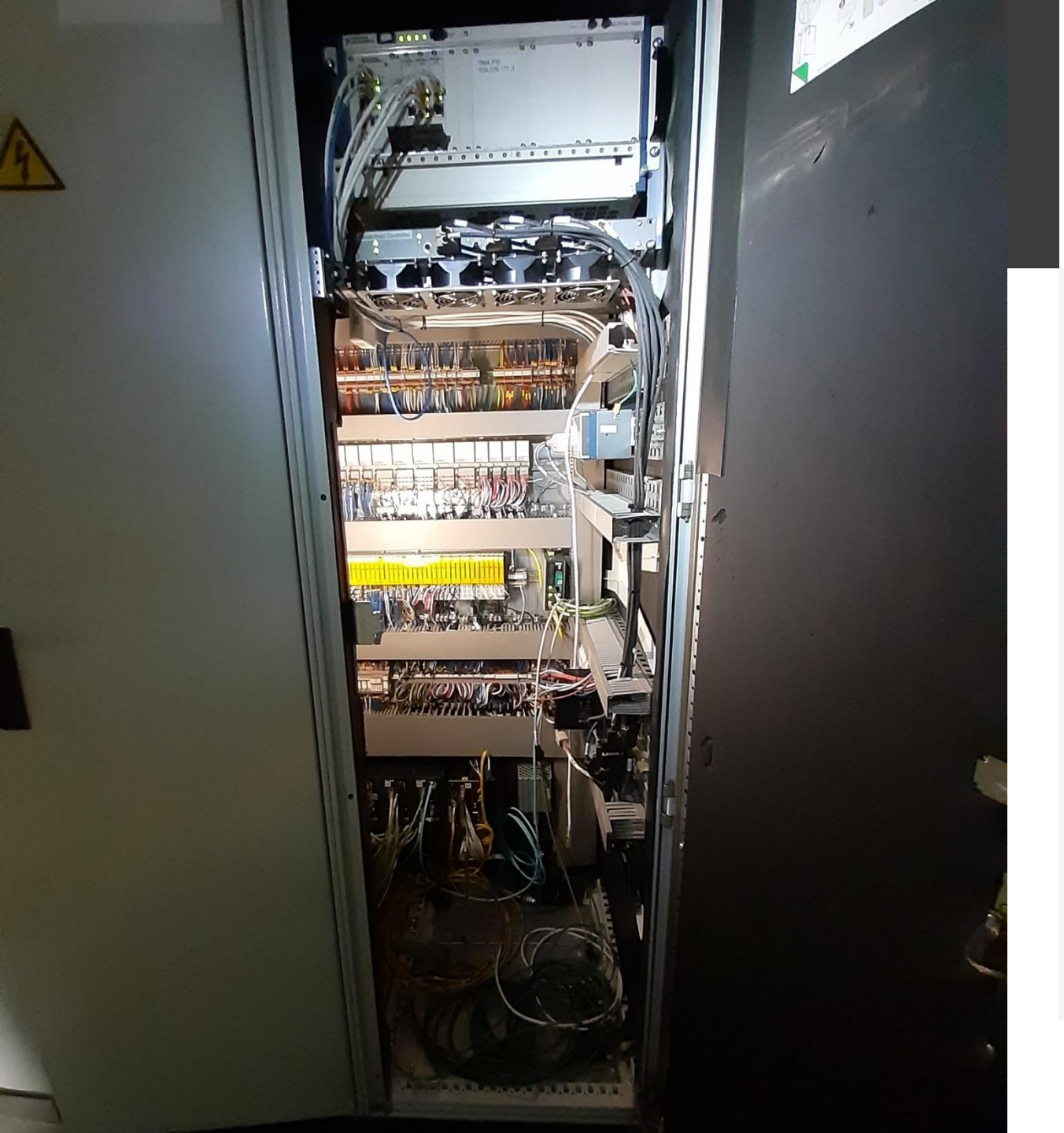

Main Cabinet (AZ-0001)

- First door from the right
- Top to bottom:
  - TMA-PXI
  - EIB (AZ EL Encoder)
  - cRIO on the side
  - Thermal controller, on the side
  - Swtiches at the bottom

Main Cabinet (AZ-0001)

- Second door from the right
- Top to bottom:
  - AXES-PXI
  - AUX-PXI
  - Bosch Controller
  - Ethercat I/O module
  - Safety controller, TMA IS

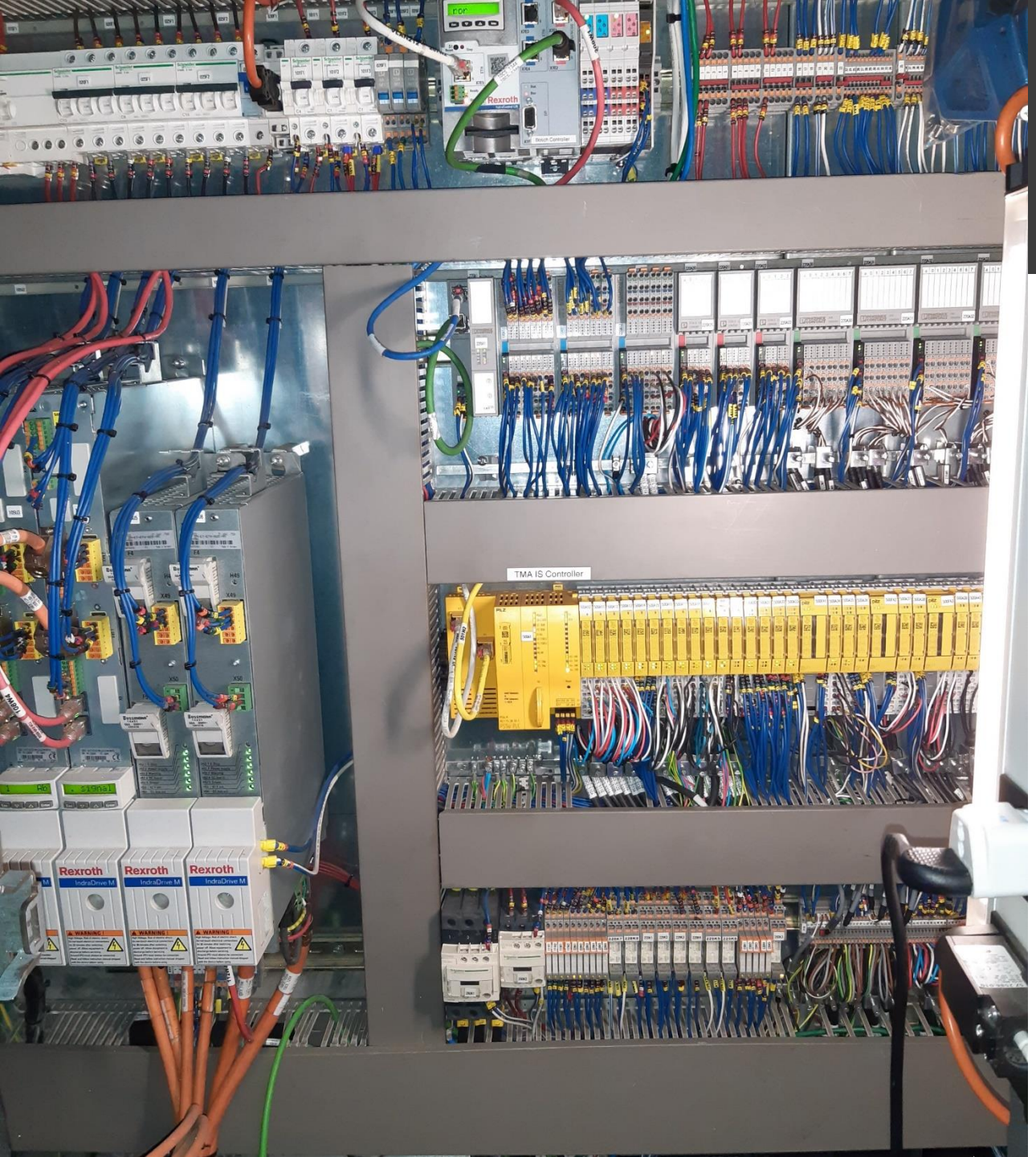

Main Cabinet (AZ-0001)

- Second door from the right
- Top to bottom:
  - AXES-PXI
  - AUX-PXI
  - Bosch Controller
  - Ethercat I/O module
  - Safety controller, TMA IS

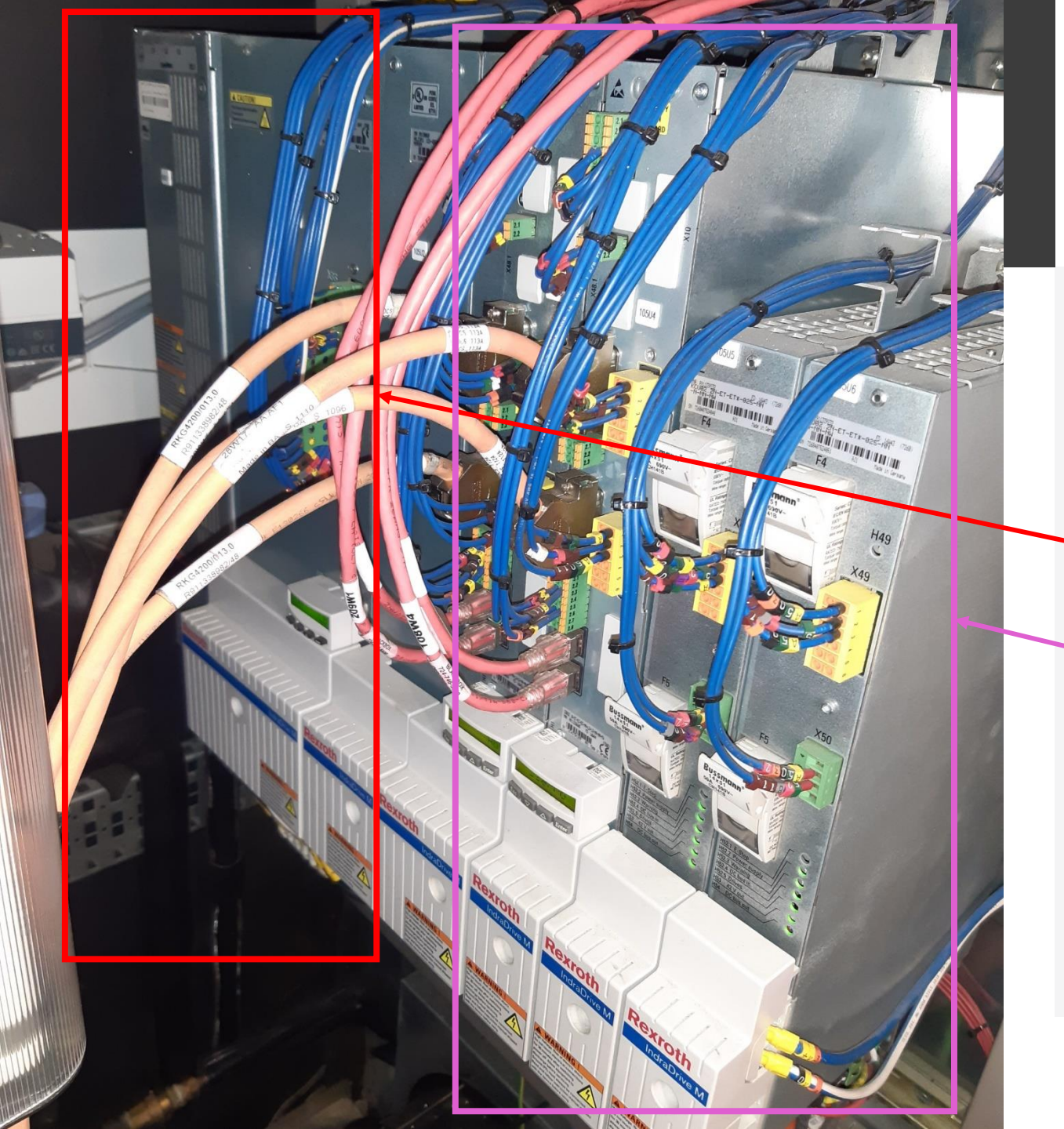

Main Cabinet (AZ-0001)

- Third door from the right, couldn`t get good picture
- Main elements here:
  - Filter and bosch power supply, most left
  - Bosch Drives for ACW and CCW, most right

2.7 c

MAIN CABINET

HOME > MONITOR & CONTROL > THERMAL SYSTEM > MAIN CABINET

OPERATION MANAGER

status: Enable

SAFETY SYSTEM

local | GIS | ETPB | WD

Tekniker — MEMBER OF BASQUE RESEARCH & TECHNOLOGY ALLIANCE

Rubi Observat

MONITOR & CONTROL
THERMAL GENERAL VIEW
AZIMUTH DRIVES THERMAL
ELEVATION DRIVES THERMAL
MAIN CABINET
TOP END CHILLER SYSTEM
AUXILIARY BOXES
CABINET 0101
1/1

MONITORING

MAIN CABINET

status	external	internal 1	internal 2	setpoint
RMCFaulty	12.5 degC	12.5 degC	12.5 degC	12.7 degC

DOORS

open
close

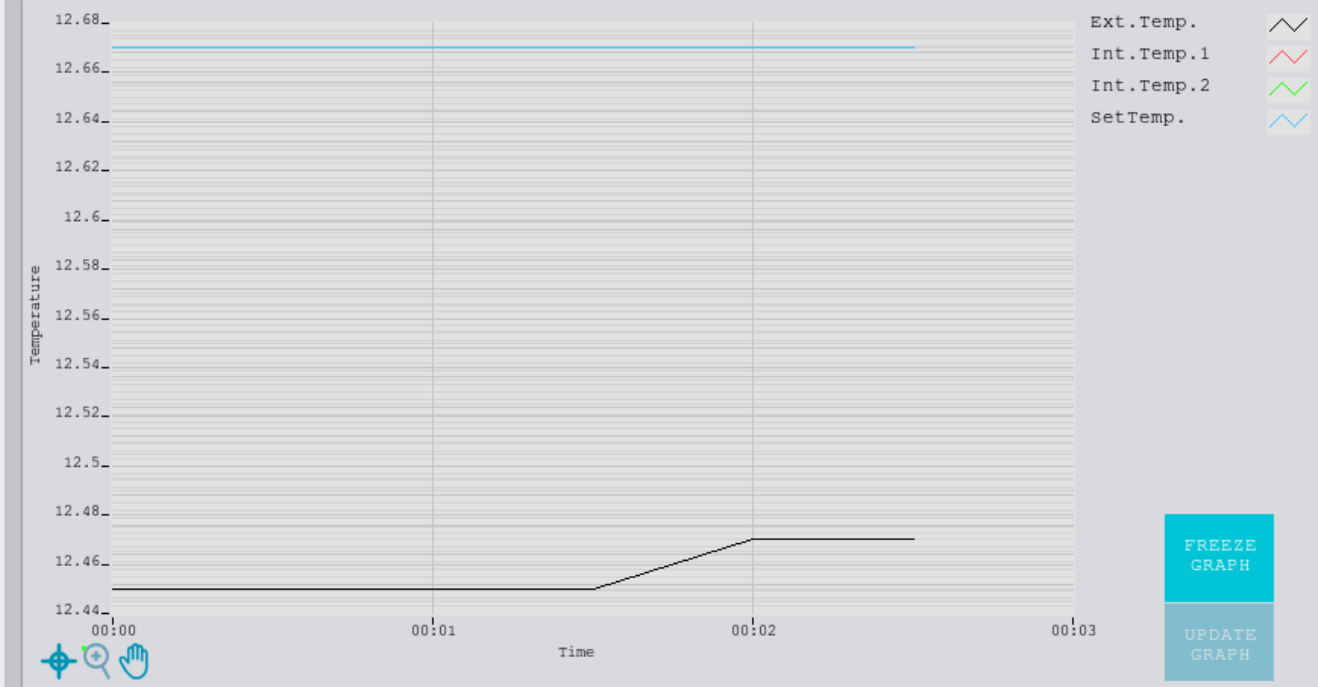

FREEZE GRAPH

UPDATE GRAPH

INTERLOCKS

active interlocks

CONTROL

RESET ALARM

TRACKING TEMPERATURE

setpoint degC: 14.5

TRACK SETPOINT | TRACK AMBIENT

GENERAL | LOCAL

LOCAL: THERE ARE NO ALARMS OR WARNINGS

©Tekniker

Azimuth Cabinet 0101 (AZ-0101)

- Location: TMA Azimuth platform
- Purpose: contains auxiliary signals for the main cabinet
  - Safety I/O module
  - Ethercat I/O module
- Additional info:
  - Temperature controlled

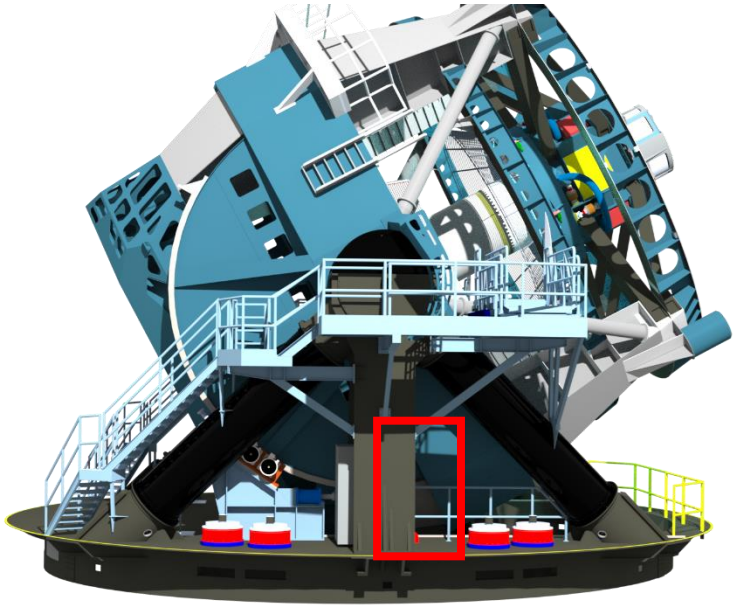

Rubin Observatory/NSF/AURA

Azimuth Cabinet 0101 (AZ-0101)

- Location: TMA Azimuth platform
- Purpose: contains auxiliary signals for the main cabinet
  - Safety I/O module
  - Ethercat I/O module
- Additional info:
  - Temperature controlled

Azimuth Cabinet 0101 (AZ-0101)

- Location: TMA Azimuth platform
- Purpose: contains auxiliary signals for the main cabinet
  - Safety I/O module
  - Ethercat I/O module
- Additional info:
  - Temperature controlled

2.7 c

CABINET 0101

HOME > MONITOR & CONTROL > THERMAL SYSTEM > CABINET 0101

OPERATION MANAGER

status
Enable

SAFETY SYSTEM

local GIS ETPB WD

Tekniker
MEMBER OF BASQUE RESEARCH & TECHNOLOGY ALLIANCE

Rubi Observat

MONITOR & CONTROL
THERMAL GENERAL VIEW
AZIMUTH DRIVES THERMAL
ELEVATION DRIVES THERMAL
MAIN CABINET
TOP END CHILLER SYSTEM
AUXILIARY BOXES
CABINET 0101
1/1

MONITORING

CABINET 0101

status	surface	setpoint
TrackingAmbient	11.8 Cdeg	11.7 Cdeg

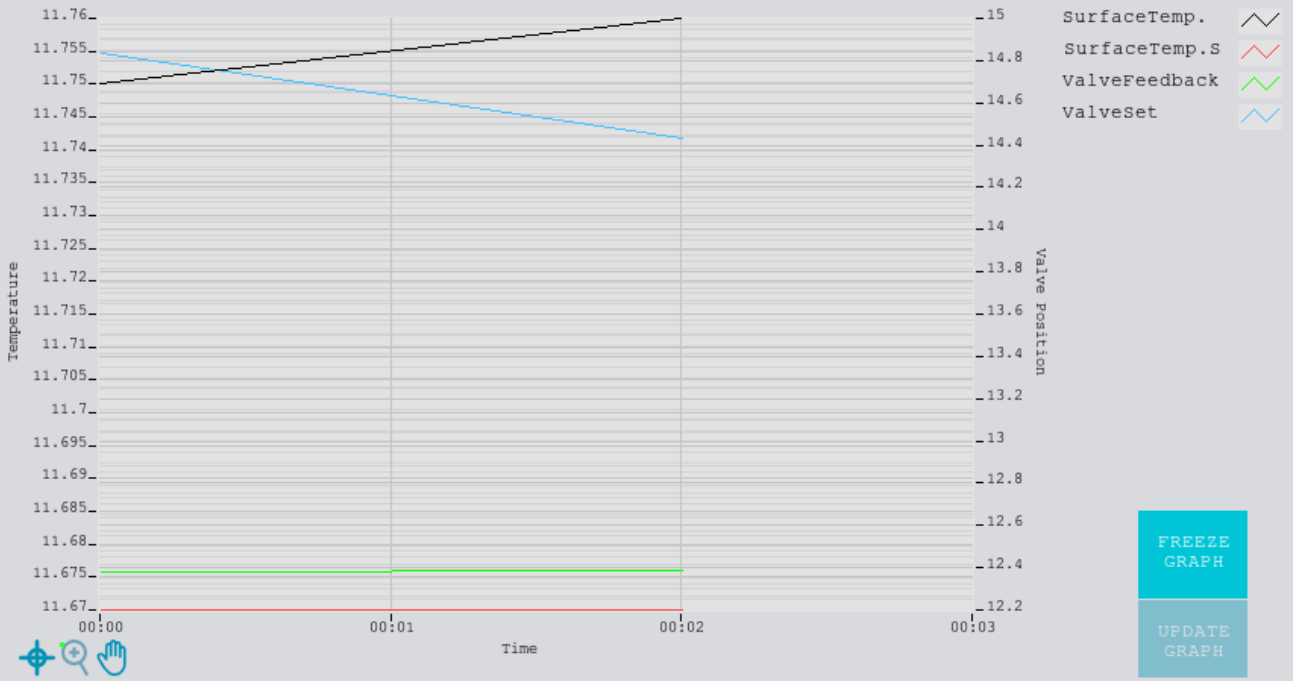

FREEZE GRAPH

UPDATE GRAPH

INTERLOCKS

active interlocks

CONTROL

ON | OFF | RESET ALARM

TRACKING TEMPERATURE

temp. setpoint Cdeg
18

TRACK SETPOINT | TRACK AMBIENT

VALVE MANUAL POSITION

valve setpoint
50

MANUAL

GENERAL
LOCAL

LOCAL: THERE ARE NO ALARMS OR WARNINGS

©Tekniker

Main Power Supply (PHASE)

- Location: TMA Azimuth platform
- Purpose: power the DC bus for the motors
- Additional info:
  - Temperature control

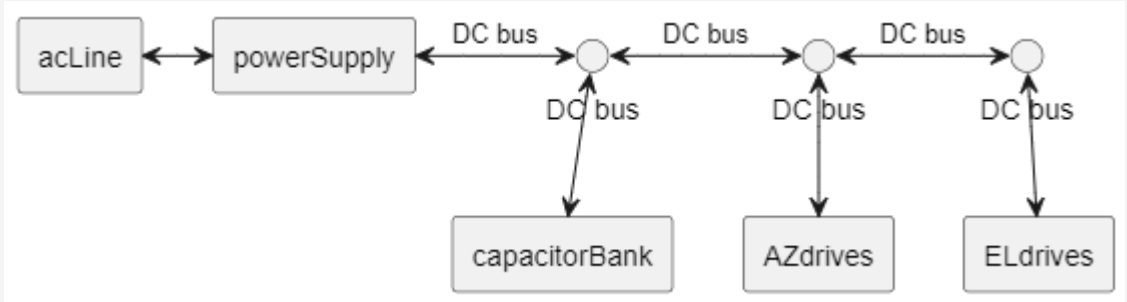

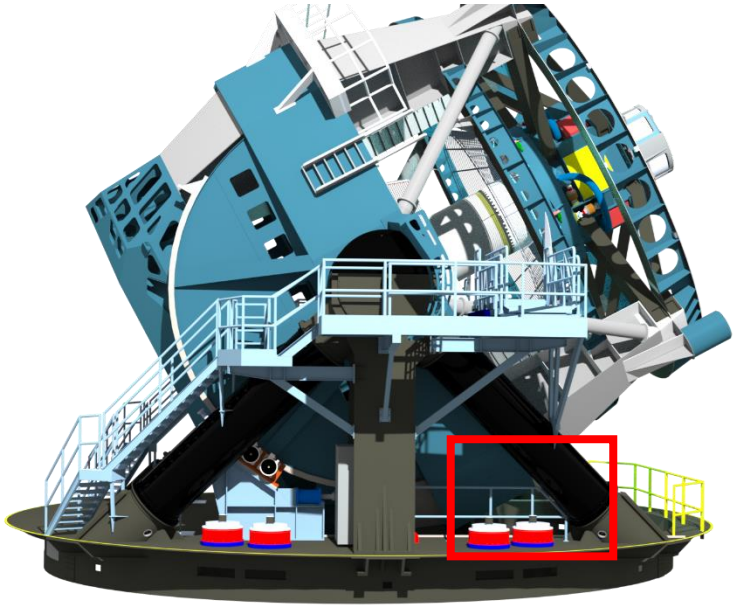

Rubin Observatory/NSF/AURA

©Tekniker

AxN
WARNING !
800 Vdc

2.7 c

POWER SUPPLY

HOME > MONITOR & CONTROL > MAIN AXIS > POWER SUPPLY

OPERATION MANAGER

status: Enable

SAFETY SYSTEM

local | GIS | ETPB | WD

Tekniker — MEMBER OF BASQUE RESEARCH & TECHNOLOGY ALLIANCE

Rubi Observat

MONITOR & CONTROL

IN AXES GENERAL VIEW

EVATION STEM

MUTH STEM

TEM

S NSFER CTION

S NSFER CTION ULTS

ER PLY

PACITOR NKS

1/1

MONITORING

POWER SUPPLY

status	current (A)	dc voltage (V)
Idle	0.0	7.4

FREEZE GRAPH

UPDATE GRAPH

Habilita o deshabilita la actualizaci

INTERLOCKS

active interlocks

CONTROL

ON | OFF | RESET ALARM

GENERAL

LOCAL

LOCAL: THERE ARE NO ALARMS OR WARNINGS

©Tekniker

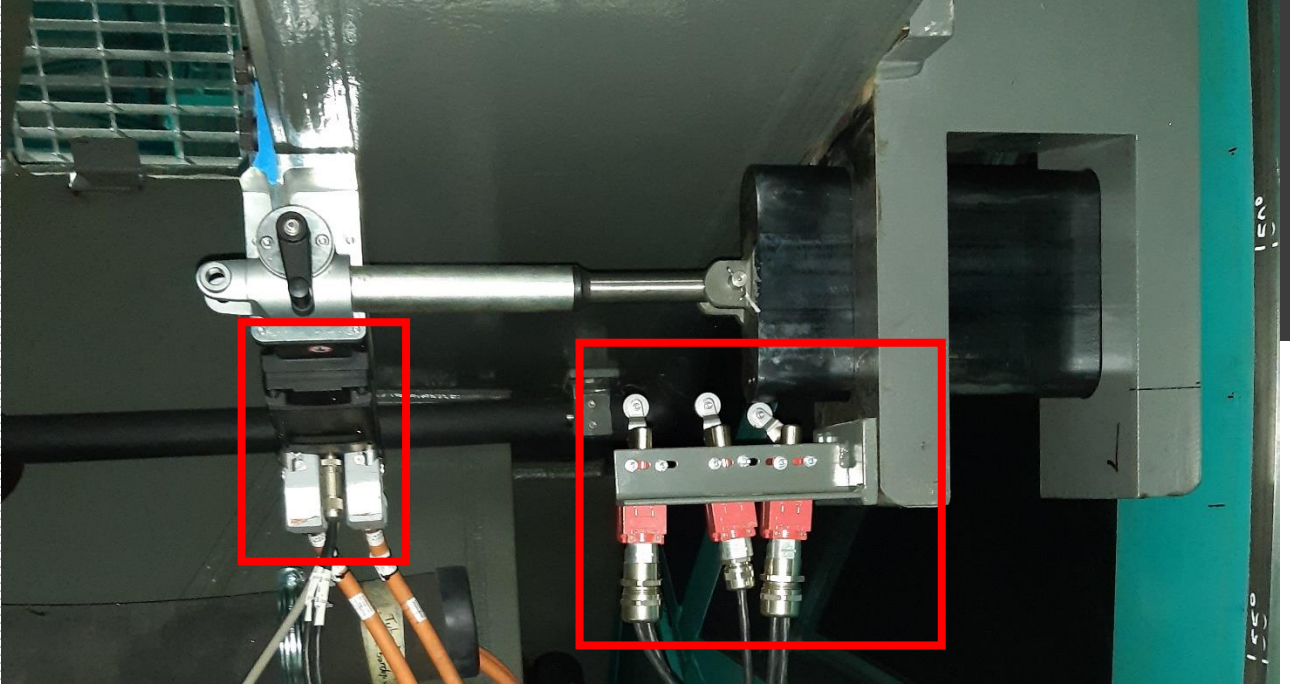

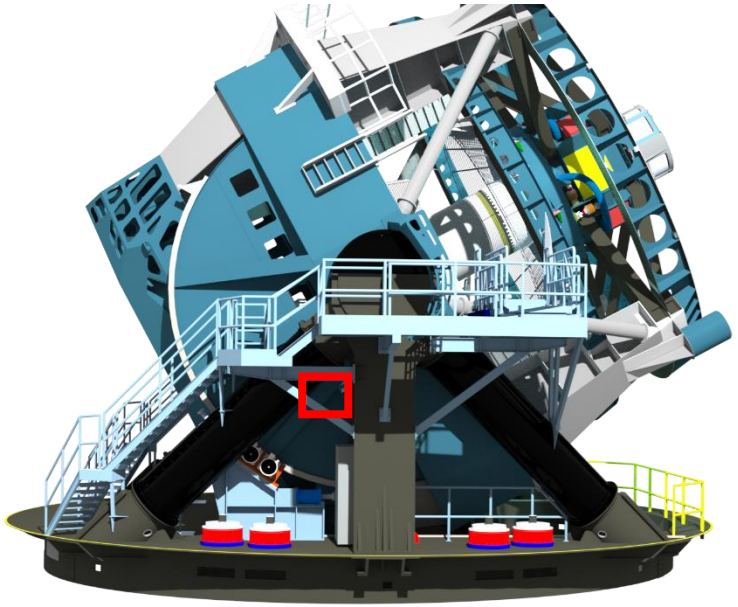

Locking Pin (LP)

- Location: TMA Elevation support
- Purpose: lock elevation axis
- Additional info:
  - 2 locking pins, one in each side
  - 2 motor-drive, one per pin
  - 3 limits per pin, wired to TMA IS
    - Inserted -> LOCKED
    - Mid -> TEST
    - Retracted -> FREE

Rubin Observatory/NSF/AURA

©Tekniker

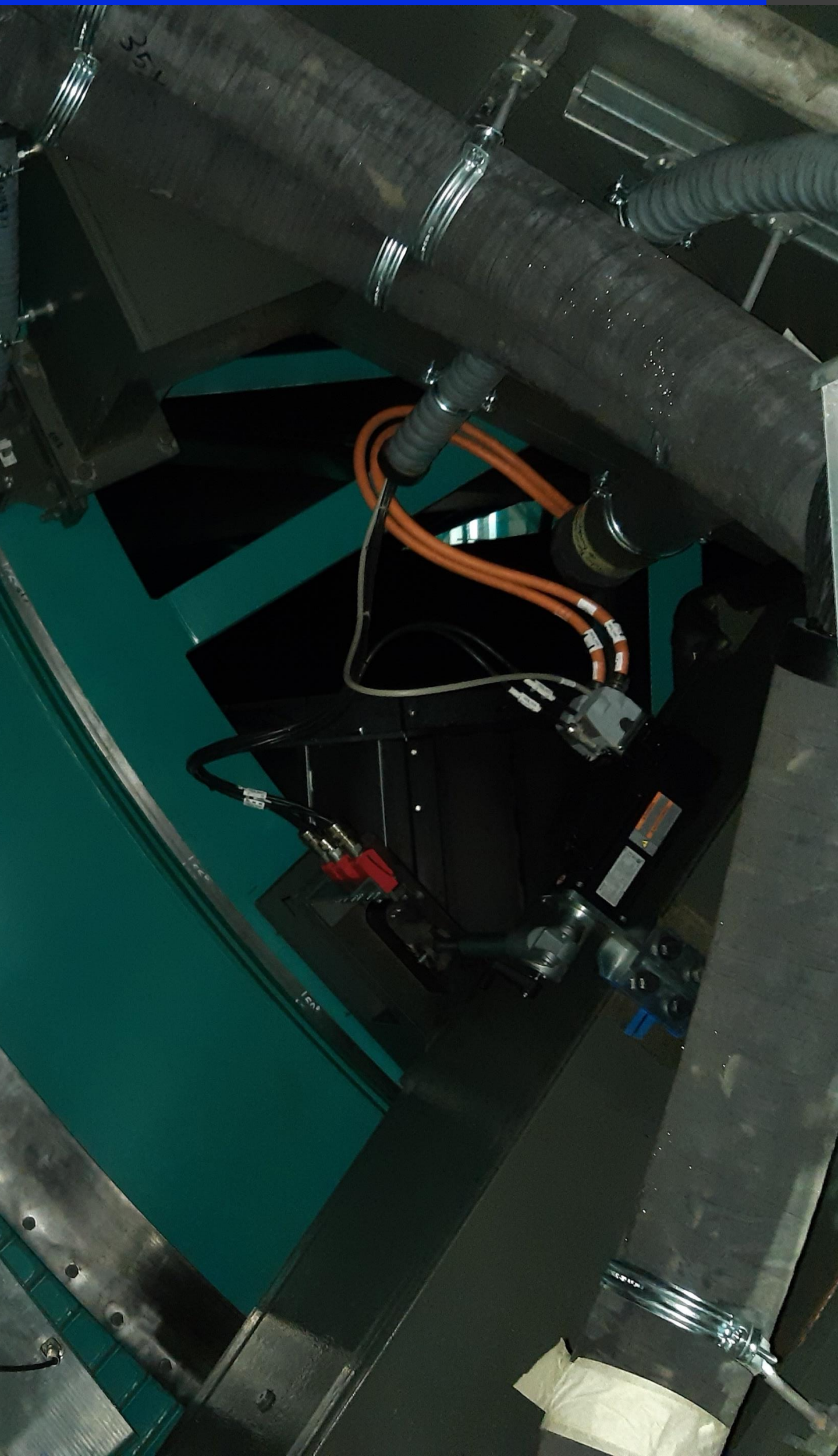

2.7 c

LOCKING PINS

HOME > MONITOR & CONTROL > MAIN AXIS > ELEVATION SYSTEM > LOCKING PINS

OPERATION MANAGER
status
Enable

SAFETY SYSTEM
local GIS ETPB WD

Tekniker
MEMBER OF BASQUE RESEARCH & TECHNOLOGY ALLIANCE
Rubi Observat

MAIN AXES
ELEVATION GENERAL VIEW
ELEVATION DRIVES
LOCKING PINS

MONITORING

MAIN VIEW | CURRENT MOVE | MOVE HISTORY

PIN X-
free
test
lock
run/alarm
pin status
Idle
position mm
85.00

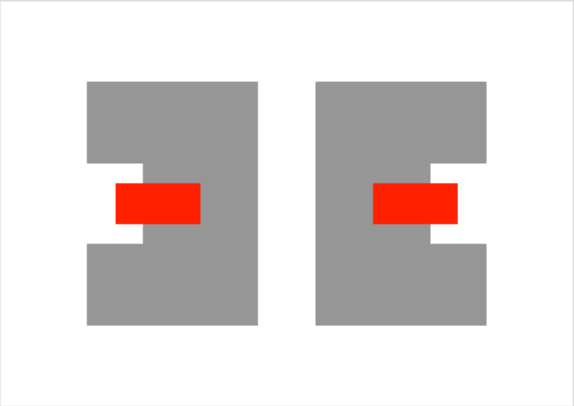

PIN X+
free
test
lock
run/alarm
pin status
Idle
position mm
85.00

BALANCING
status
Idle

ELEVATION
status pos. deg
Idle 0.00

INTERLOCKS
active interlocks
Locking Pin Safety

CONTROL

ON | OFF | RESET ALARM

PIN SELECTOR
BOTH | X- | X+

PIN POSITION
FREE | TEST | LOCK | STOP

JOG
speed %
100 75 50 25 0

Shows the status, the position and the setpoint of the elevation axis and by clicking loads the Elevation General View window.

1/1

GENERAL
LOCAL

LOCAL: THERE ARE NO ALARMS OR WARNINGS

©Tekniker

Deployable Platforms (DP)

- Location: TMA elevation support
- Purpose: access the camera
- Additional info:
  - 2 platforms each with 2 sections
  - 4 extensions, 2 per platform
  - 4 motor-drive, 1 per section
  - 12 limits, wired to TMA IS
    - 4 retracted, 1 per section
    - 4 extended, 1 per section
    - 4 inserted, 1 per extension

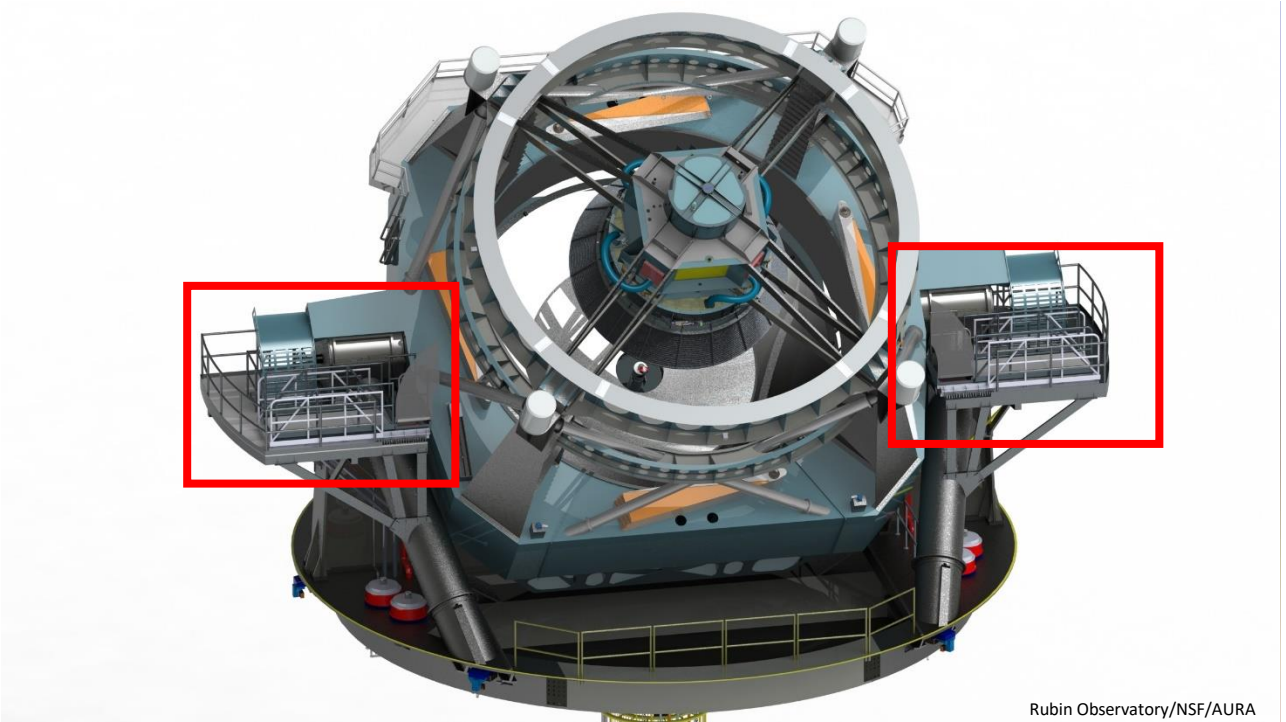

Rubin Observatory/NSF/AURA

©Tekniker

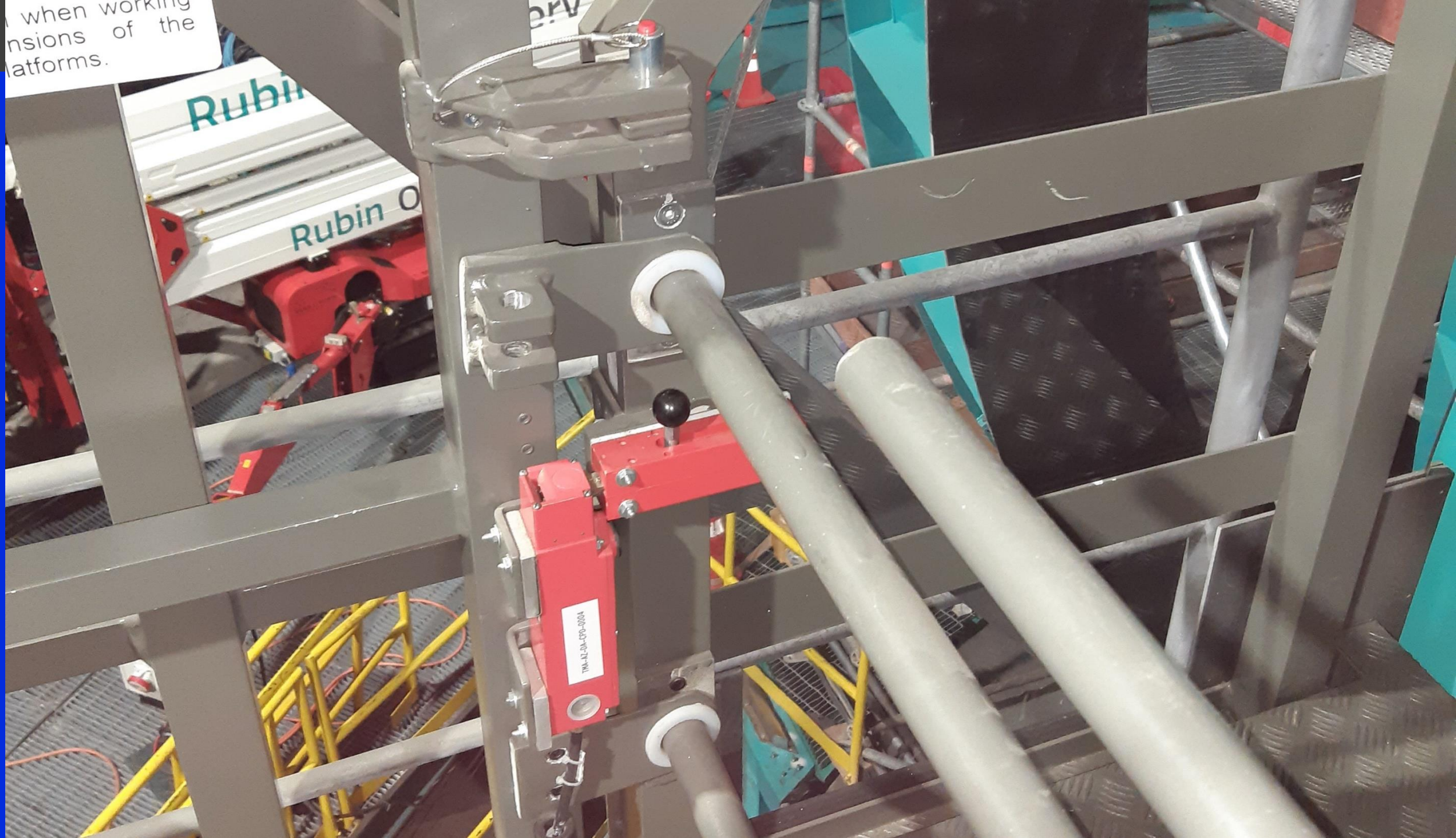
when working
nsions of the
latforms.
Rubin
Rubin O
TNA-AZ-OA-CPO-0004

©Tekniker

2.7 c

DEPLOYABLE PLATFORM

HOME > MONITOR & CONTROL > DEPLOYABLE PLATFORM

OPERATION MANAGER
status
Enable

SAFETY SYSTEM
local GIS ETPB WD

Tekniker
MEMBER OF BASQUE RESEARCH & TECHNOLOGY ALLIANCE
Rubi Observat

MONITORING

MAIN VIEW | CURRENT MOVE | MOVE HISTORY

PLATFORM X-

- run/alarm
- retract section 1
- extend section 1
- retract section 2
- extend section 2

status: Idle
position section 1 mm: 2287.00
position section 2 mm: 2330.00

EXTENSION M2: locked, inserted
EXTENSION M1M3: locked, inserted

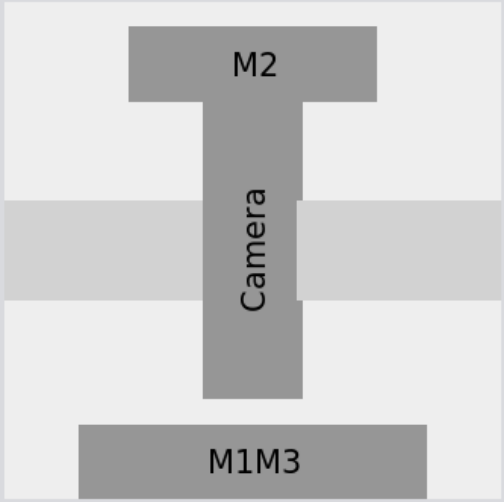

PLATFORM X+

- run/alarm
- retract section 1
- extend section 1
- retract section 2
- extend section 2

status: Idle
position section 1 mm: 2364.00
position section 2 mm: 2386.00

EXTENSION M2: locked, inserted
EXTENSION M1M3: locked, inserted

LOCKING PINS
free test lock

ELEVATION
status: Idle
pos. deg: 0.00

INTERLOCKS
active interlocks: Deployable Platform Safety

Shows the status, the position and the setpoint of the elevation axis and by clicking loads the Elevation General View window.

CONTROL

PLATFORM SELECTOR: BOTH | X- | X+

PLATFORM: ON | OFF | RESET ALARM | EXTEND | RETRACT | STOP

JOG
speed %: 100 75 50 25 0

EXTENSIONS MANAGE: UNLOCK M2 | LOCK M2 | UNLOCK M1M3 | LOCK M1M3

GENERAL
LOCAL

LOCAL: CABINETCONTROLLERNOTOK

©Tekniker

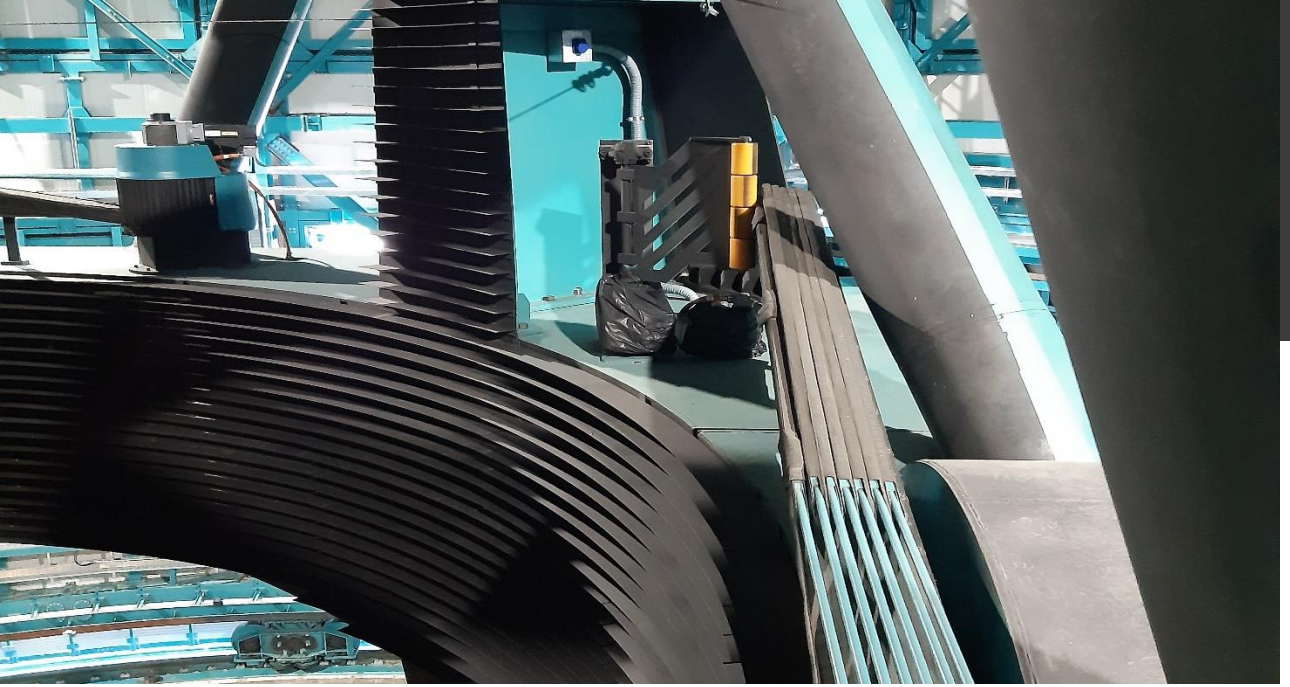

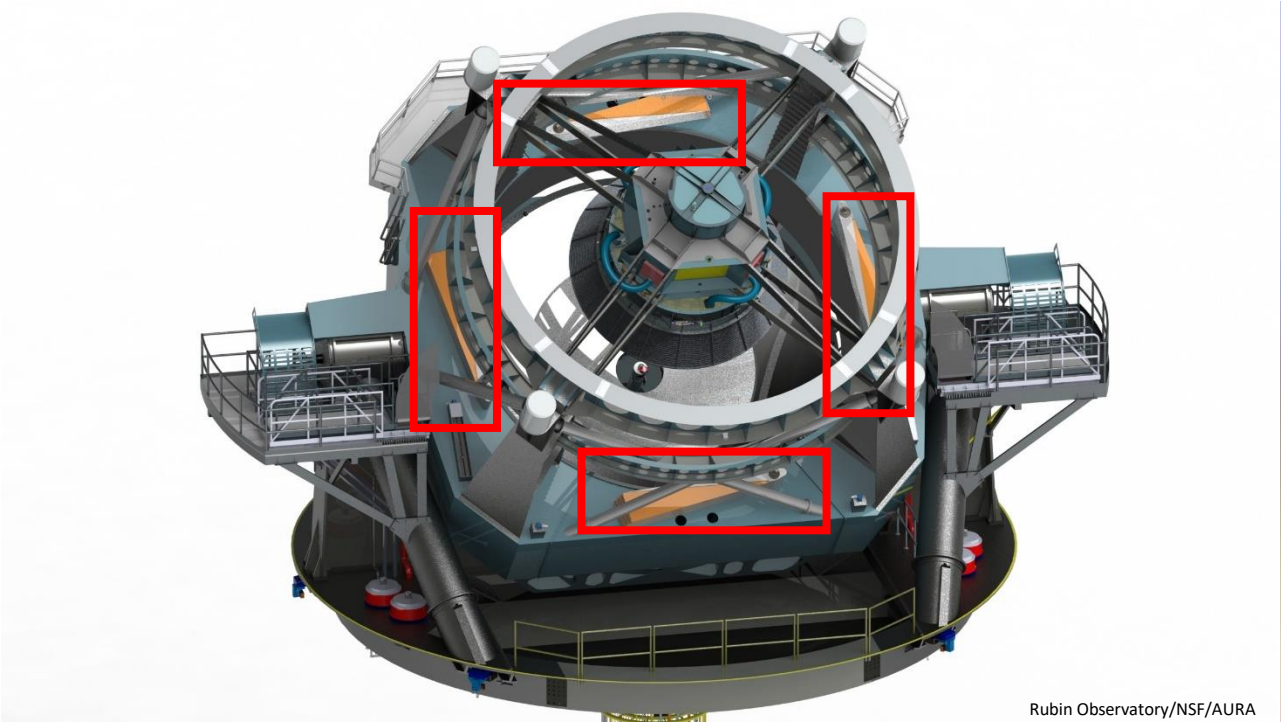

Mirror Cover (and locks) (MC MCL)

- Location: TMA over CST
- Purpose: protect M1M3
- Additional info:
  - 4 covers and 4 locks
  - 8 motor-drive, 1 per cover, 1 per lock
  - 16 limits
    - 4 cover retracted, 1 per cover
    - 4 cover extended, 1 per cover
    - 4 lock retracted, 1 per lock
    - 4 lock extended, 1 per lock
  - 2 manual disable switches -> TMA IS

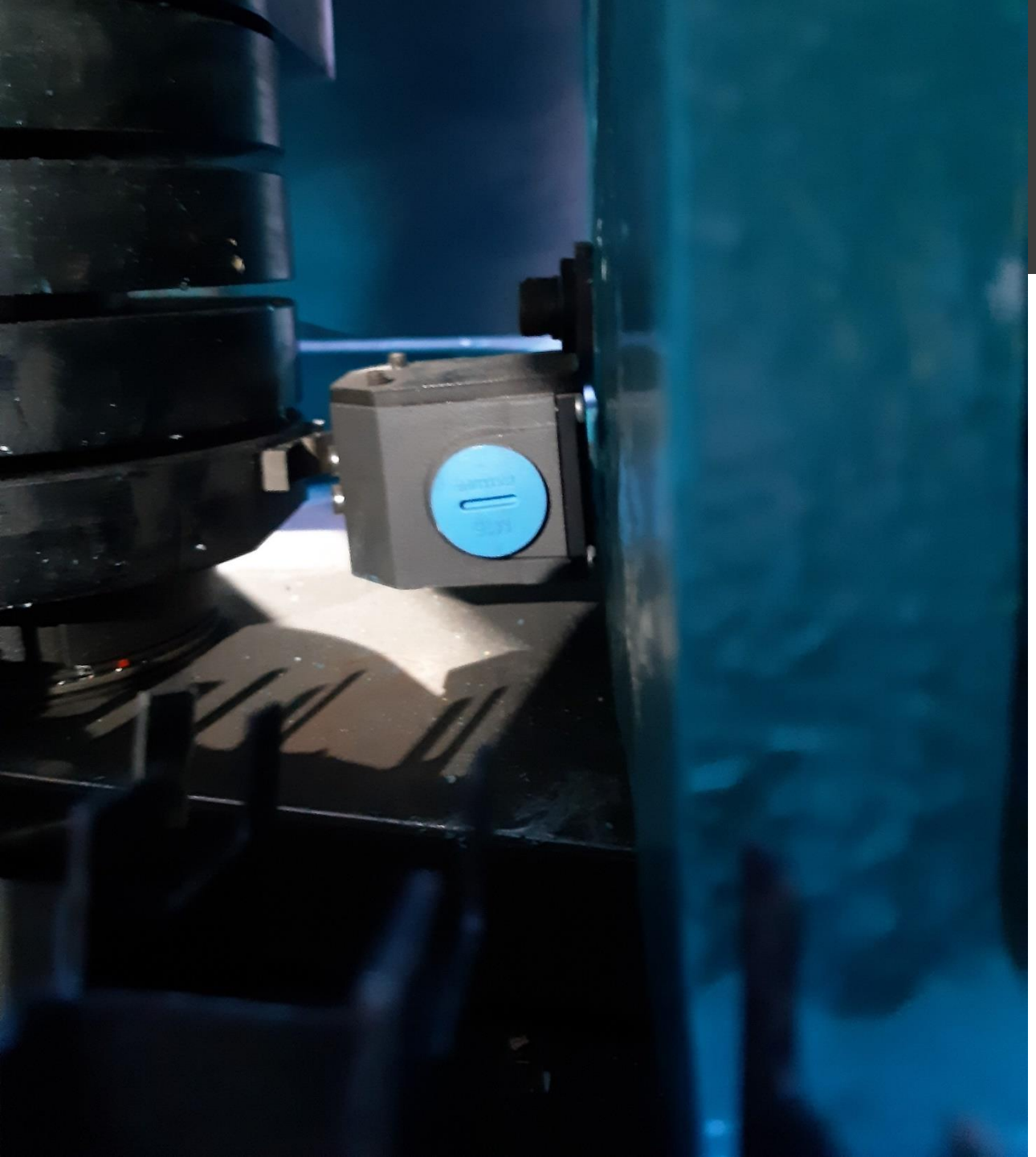

Mirror Cover (and locks) (MC MCL)

- Location: TMA over CST
- Purpose: protect M1M3
- Additional info:
  - 4 covers and 4 locks
  - 8 motor-drive, 1 per cover, 1 per lock
  - 16 limits
    - 4 cover retracted, 1 per cover
    - 4 cover extended, 1 per cover
    - 4 lock retracted, 1 per lock
    - 4 lock extended, 1 per lock
  - 2 manual disable switches -> TMA IS

©Tekniker

©Tekniker

2.7 c

MIRROR COVER GENERAL VIEW

HOME > MONITOR & CONTROL > MIRROR COVER SYSTEM > MIRROR COVER GENERAL VIEW

OPERATION MANAGER
status
Enable

SAFETY SYSTEM
local GIS ETPB WD

Tekniker
MEMBER OF BASQUE RESEARCH & TECHNOLOGY ALLIANCE
Rubi Observat

MONITOR & CONTROL
MIRROR COVER GENERAL VIEW
MIRROR COVER LOCKS

MONITORING

MAIN VIEW | CURRENT MOVE | MOVE HISTORY

MIRROR COVER Y+
run/alarm
retracted
deployed
locked
unlocked
status
Idle
position deg
35.09

MIRROR COVER X-
run/alarm
retracted
deployed
locked
unlocked
status
Idle
position deg
44.91

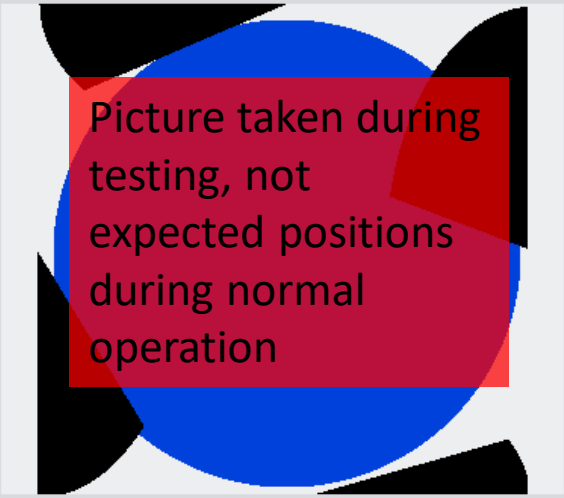

MIRROR COVER X+
run/alarm
retracted
deployed
locked
unlocked
status
Idle
position deg
77.08

MIRROR COVER Y-
run/alarm
retracted
deployed
locked
unlocked
status
Idle
position deg
25.00

INTERLOCKS
active interlocks

CONTROL

MIRROR COVER SELECTION
Y+
X- ALL X+
Y-

MIRROR COVER POWER
ON OFF RESET ALARM

MIRROR COVER PREDEFINED MOVE
DEPLOY RETRACT

JOG
speed %
100 75 50 25 0

CUSTOM MOVE
position deg
25
speed deg/s
0.20002
MOVE STOP

1/1

GENERAL
LOCAL

LOCAL: THERE ARE NO ALARMS OR WARNINGS

©Tekniker

2.7 c

MIRROR COVER LOCKS

HOME > MONITOR & CONTROL > MIRROR COVER SYSTEM > MIRROR COVER LOCKS

OPERATION MANAGER
status
Enable

SAFETY SYSTEM
local GIS ETPB WD

Tekniker
MEMBER OF BASQUE RESEARCH & TECHNOLOGY ALLIANCE
Rubi Observat

MONITOR & CONTROL
IRROR COVER ENERAL VIEW
IRROR COVER OCKS

MONITORING

MAIN VIEW | CURRENT MOVE | MOVE HISTORY

LOCK Y+
unlocked
locked
run/alarm
retracted
status
Idle
position deg
173.62

LOCK X-
unlocked
locked
run/alarm
retracted
status
Idle
position deg
170.52

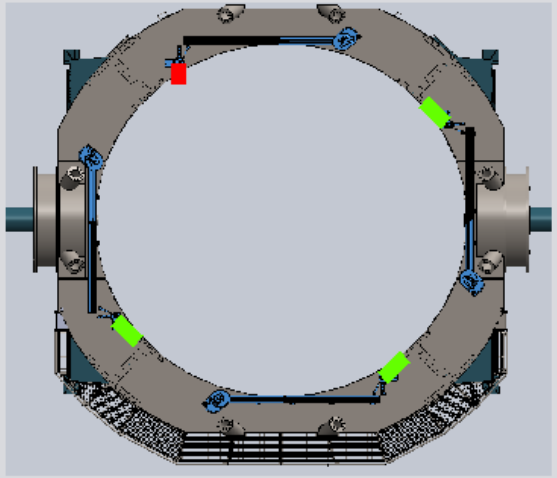

LOCK X+
unlocked
locked
run/alarm
retracted
status
Idle
position deg
169.99

LOCK Y-
unlocked
locked
run/alarm
retracted
status
Idle
position deg
162.65

INTERLOCKS
active interlocks
Mirror Cover Safety

CONTROL

MIRROR COVER LOCK SELECTION
Y+
X- ALL X+
Y-

MIRROR COVER LOCK POWER
ON OFF RESET ALARM

FIXED MOVE
LOCK UNLOCK STOP

JOG
speed %
100 75 50 25 0

1/1

GENERAL
LOCAL

LOCAL: THERE ARE NO ALARMS OR WARNINGS

©Tekniker

Elevation Cabinets (EL-0101 & EL-0102)

- Location: TMA inside CST
- Purpose: contains auxiliary signals for the main cabinet
  - Safety I/O module
  - Ethercat I/O module

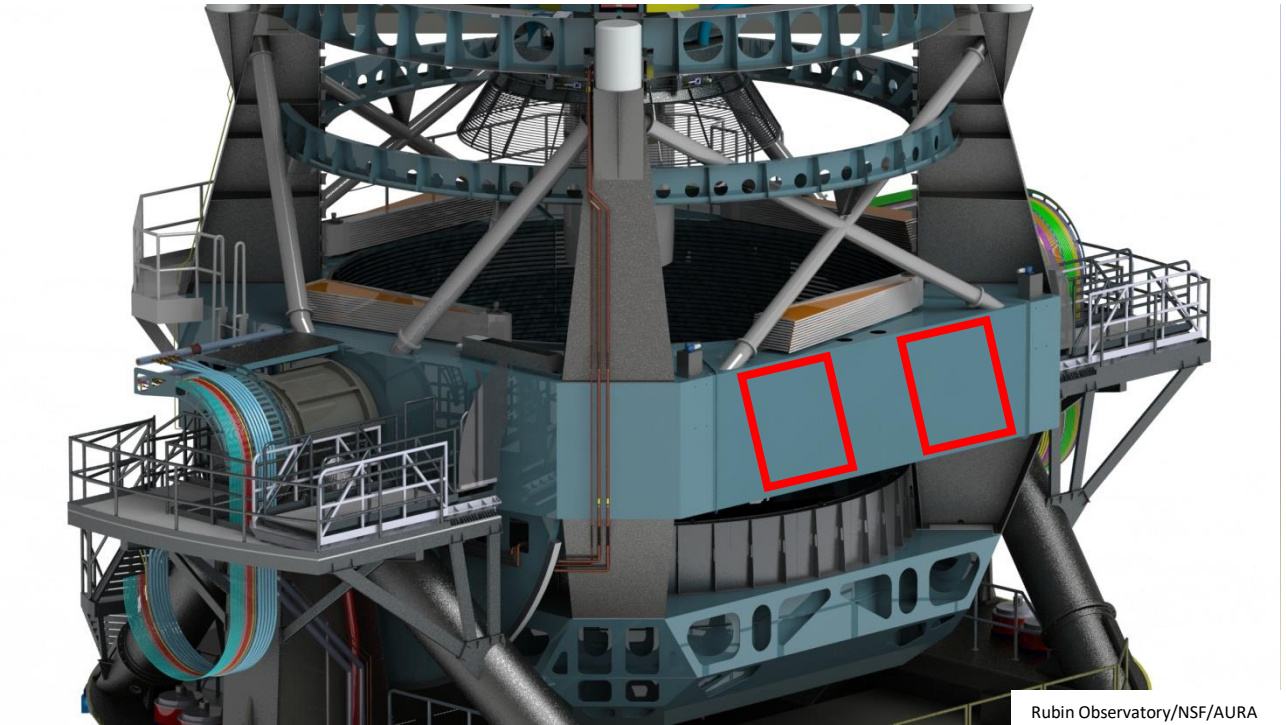

Rubin Observatory/NSF/AURA

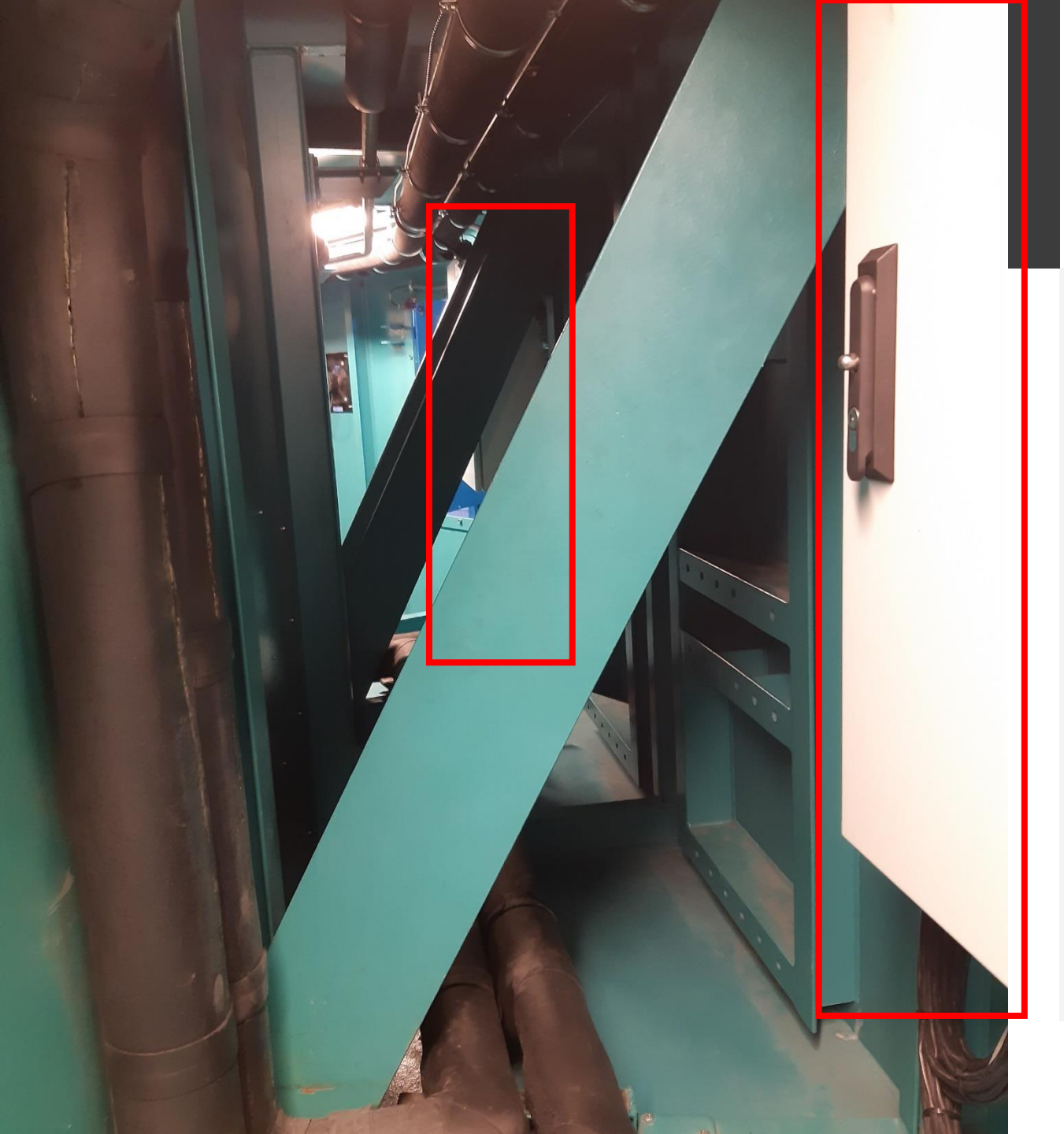

Elevation Cabinets (EL-0101 & EL-0102)

- Location: TMA inside CST
- Purpose: contains auxiliary signals for the main cabinet
  - Safety I/O module
  - Ethercat I/O module

Elevation Inclinometer

- Location: TMA elevation column
- Purpose: get start angle for elevation

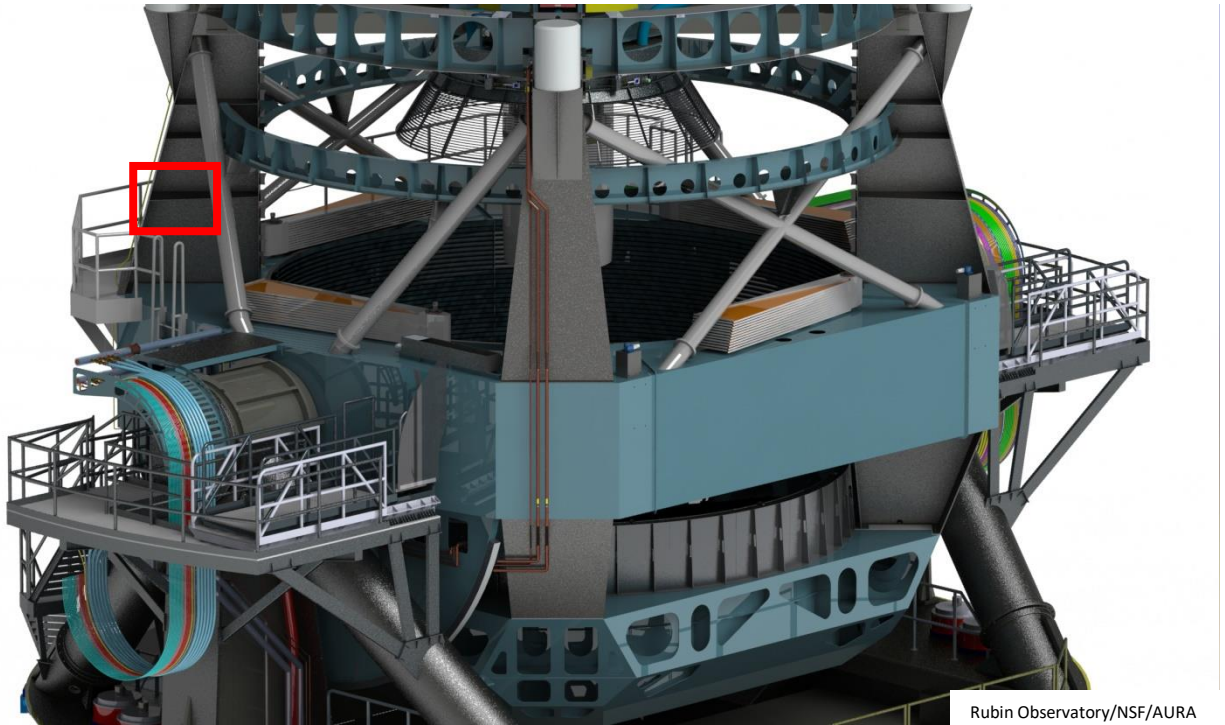

Rubin Observatory/NSF/AURA

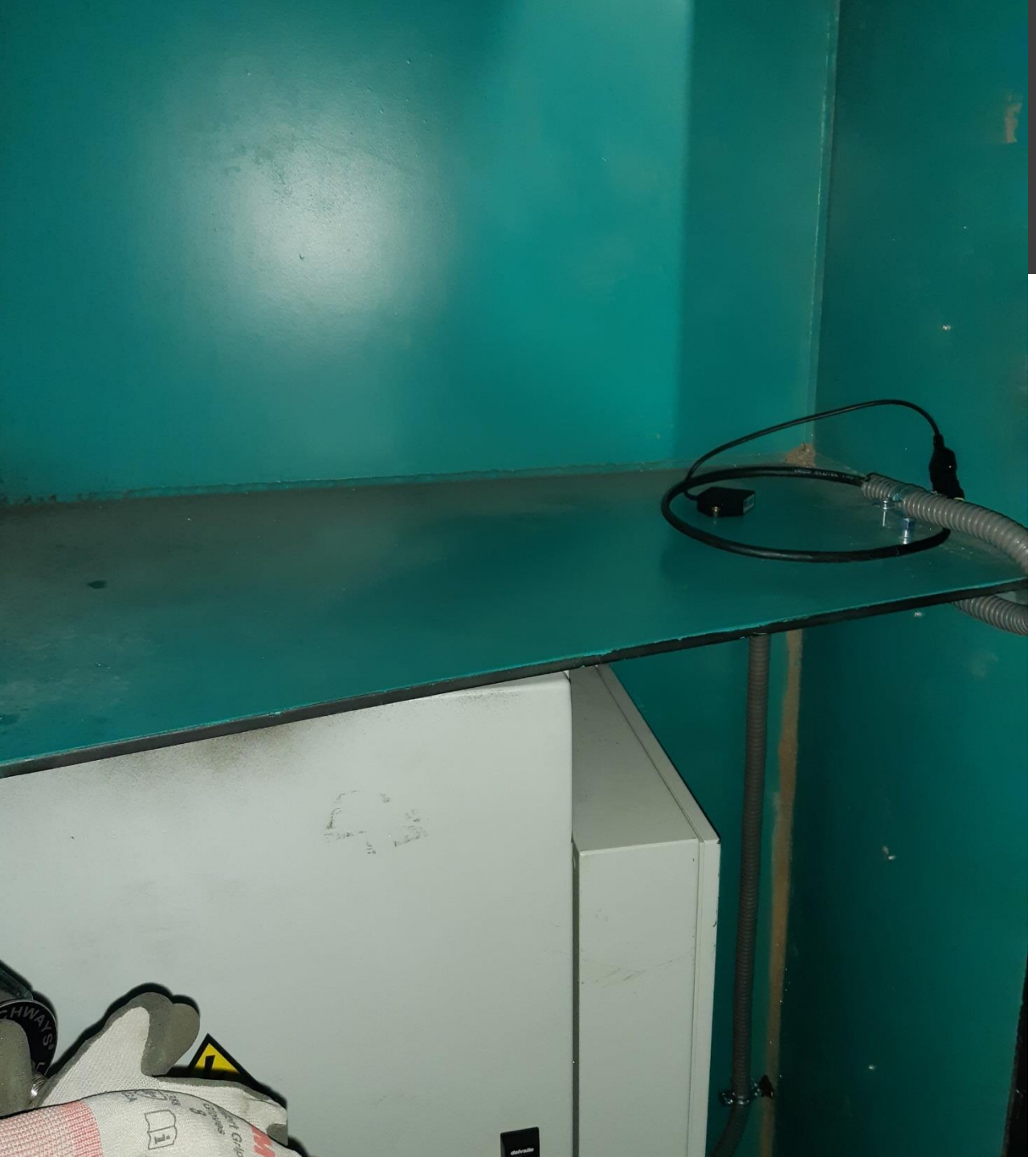

Elevation Inclinometer

- Location: TMA elevation column
- Purpose: get start angle for elevation

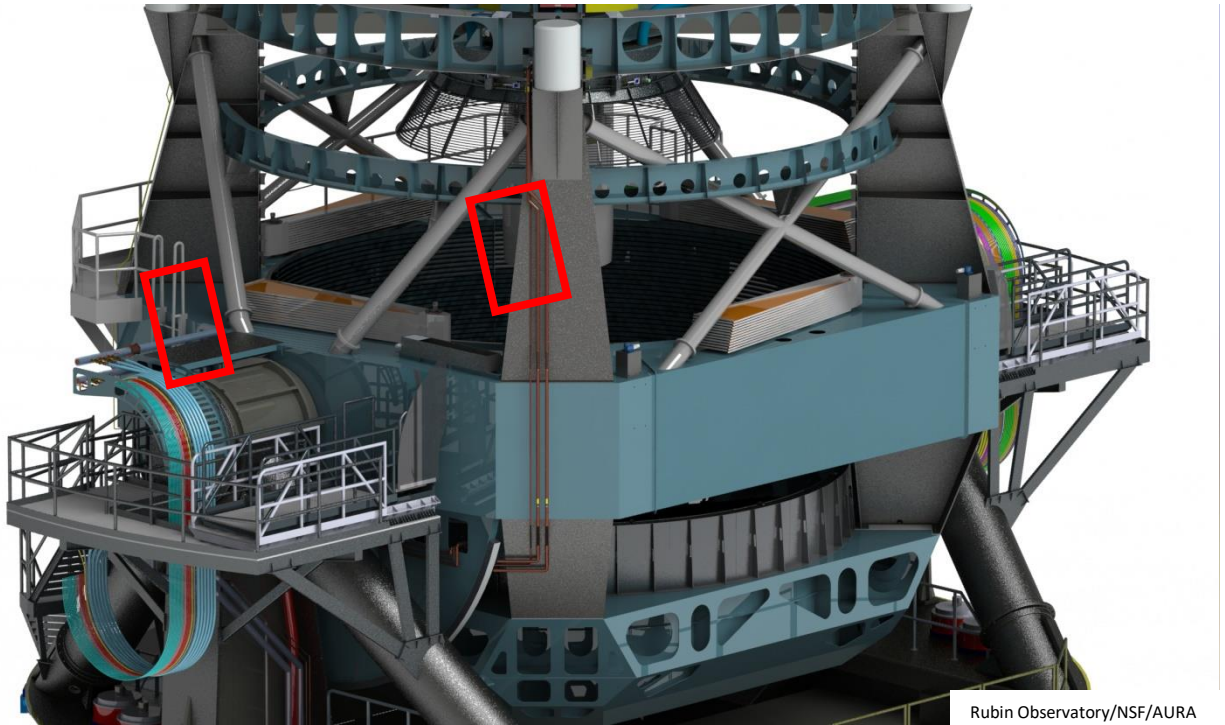

Balancing (BAL)

- Location: TMA inside CST
- Purpose: fine balance elevation
- Additional info:
  - 4 balance weights (2 horizon,2 zenith)
  - 4 motor-drive, 1 per weight
  - 8 range limits
    - 4 negative, 1 per weight
    - 4 positive, 1 per weight

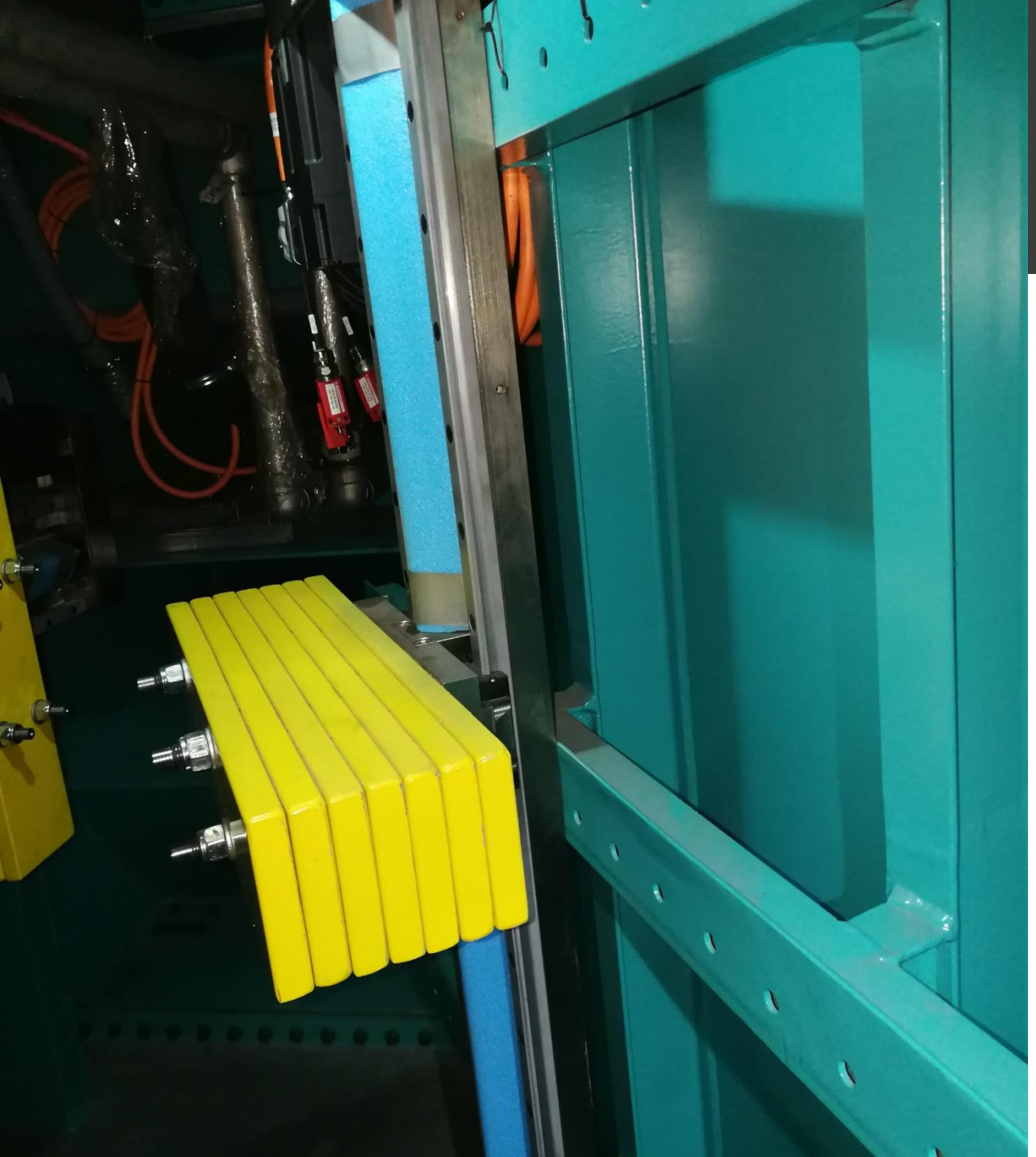

Balancing (BAL)

- Location: TMA inside CST
- Purpose: fine balance elevation
- Additional info:
  - 4 balance weights (2 horizon,2 zenith)
  - 4 motor-drive, 1 per weight
  - 8 range limits
    - 4 negative, 1 per weight
    - 4 positive, 1 per weight

2.7 c

BALANCING GENERAL VIEW

HOME > MONITOR & CONTROL > BALANCING SYSTEM > BALANCING GENERAL VIEW

OPERATION MANAGER
status: Enable

SAFETY SYSTEM
local | GIS | ETPB | WD

Tekniker — MEMBER OF BASQUE RESEARCH & TECHNOLOGY ALLIANCE
Rubi Observat

MONITORING

MAIN VIEW | CURRENT MOVE | MOVE HISTORY

0 DEG BALANCING

	DRIVE 0.X-	DRIVE 0.X+
status	Idle	Idle
+ limit		
- limit		
pos. mm	800.00	800.00

90 DEG BALANCING

	DRIVE 90.X-	DRIVE 90.X+
status	Idle	Idle
+ limit		
- limit		
pos. mm	650.00	650.00

ELEVATION AXIS CURRENT

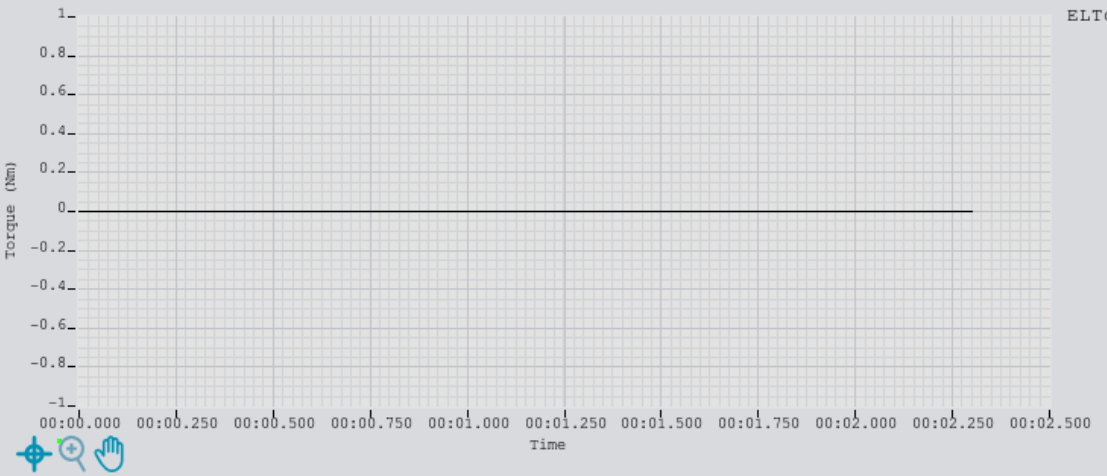

FREEZE GRAPH
UPDATE GRAPH

SETTINGS POS.

0.X-	0.X+
800.0	800.0
90.X-	90.X+
650.0	650.0

LOCKING PINS
free | test | lock

ELEVATION
status: Idle
position: 0.00 deg

INTERLOCKS
active interlocks: Balancing System Safety

CONTROL

BALANCING SELECTOR

90.X+
0.X- | ALL | 0.X+
90.X-

BALANCING POWER

ON | OFF | RESET ALARM

PREDIFINED ACTIONS

SIDE TO SIDE | SAVE POS. | MOVE TO SETTINGS

JOG
speed %: 100 / 75 / 50 / 25 / 0

POINTING
position mm: 535
speed mm/s: 10
MOVE | STOP

GENERAL
LOCAL

LOCAL: THERE ARE NO ALARMS OR WARNINGS

©Tekniker

Auxiliary boxes (distributed TMA cabinets not MCS)

- Location: TMA structure
- Purpose: power various elements, like the camera for example
- Additional info:
  - These cabinets have temperature control and the setpoint is provided by the MCS

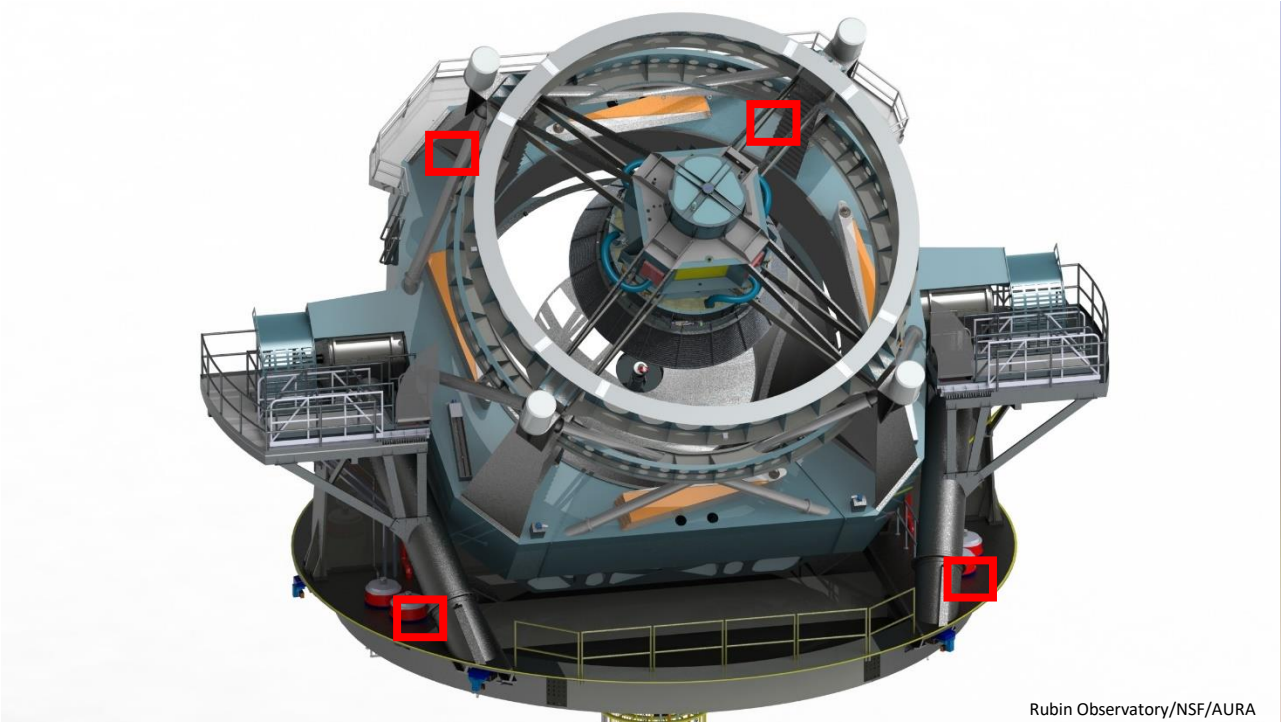

Rubin Observatory/NSF/AURA

2.7 c

AUXILIARY BOXES

HOME > MONITOR & CONTROL > AUXILIARY BOXES

OPERATION MANAGER
status
Enable

SAFETY SYSTEM
local GIS ETPB WD

Tekniker
MEMBER OF BASQUE RESEARCH & TECHNOLOGY ALLIANCE
Rubi Observat

MONITOR & CONTROL
HERMAL ENERAL VIEW
ZIMUTH RIVES HERMAL
LEVATION RIVES HERMAL
AIN ABINET
OP END HILLER YSTEM
AUXILIARY BOXES
ABINET 0101

1/1

MONITORING AND CONTROL

TMA-EL-PD-CBT-0001
status: Fault
RESET
setpoint Cdeg: 11.7
temperature Cdeg: 8.9
fan status
FAN POWER ON | FAN POWER OFF

TMA-EL-PD-CBT-0002
status: Fault
RESET
setpoint Cdeg: 11.7
temperature Cdeg: 8.8
fan status
FAN POWER ON | FAN POWER OFF

TMA-AZ-PD-CBT-0001
status: Fault
RESET
setpoint Cdeg: 11.7
temperature Cdeg: 8.9
fan status
FAN POWER ON | FAN POWER OFF

TMA-AZ-DR-CBT-0001
status: Fault
RESET
setpoint Cdeg: 11.7
temperature Cdeg: 8.9

TMA-AZ-PD-TRM-0001
status: 0
RESET
setpoint Cdeg: 0
temperature Cdeg: 0

GENERAL
LOCAL

LOCAL: CABINETCONTROLLERNOTOK

©Tekniker

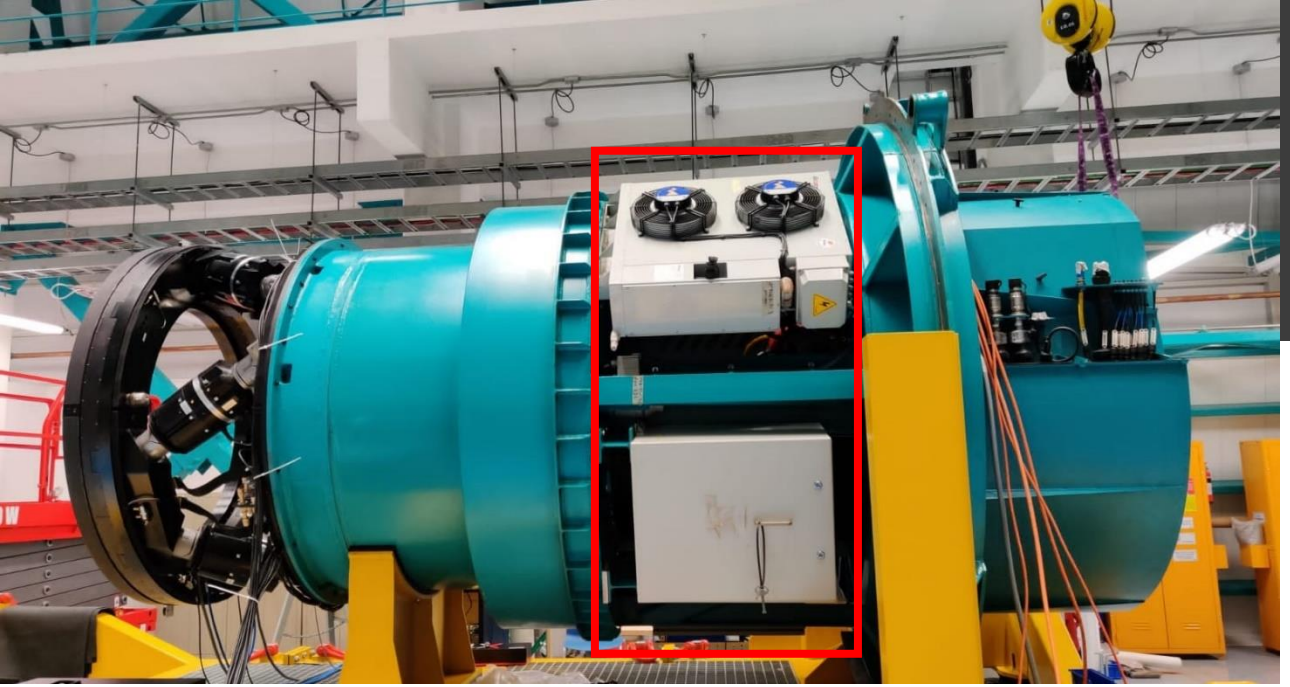

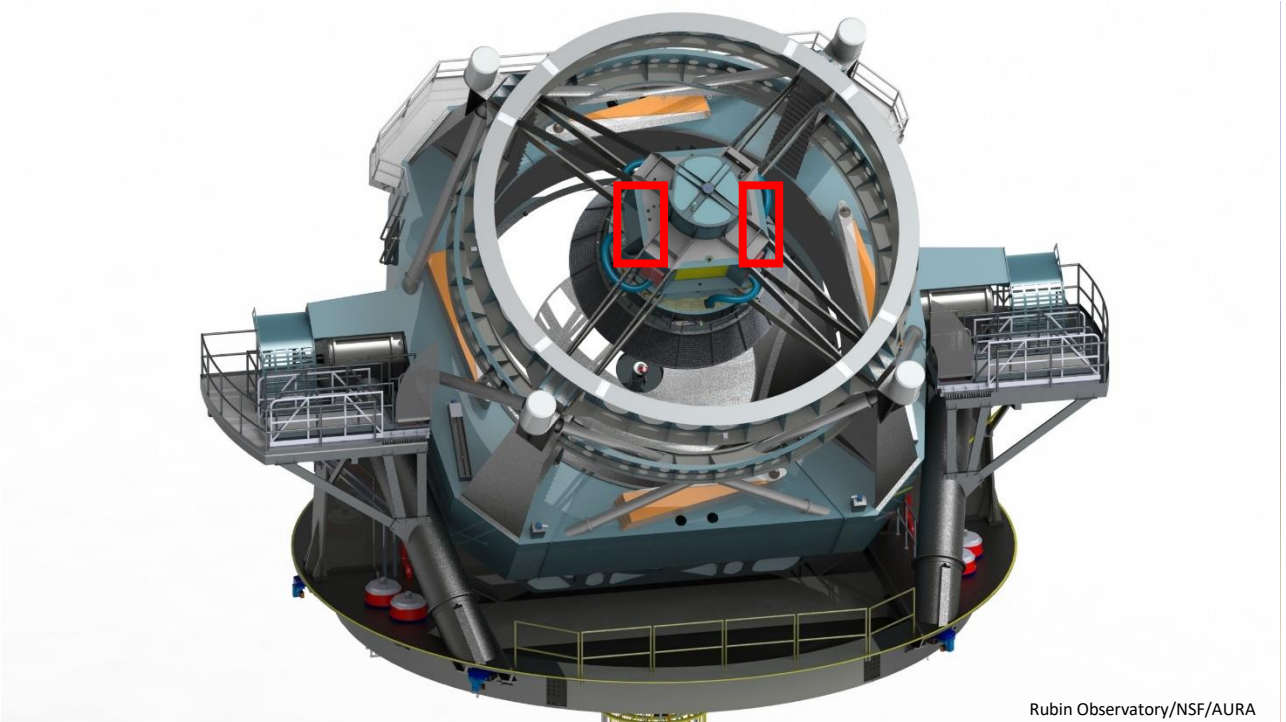

Top End Chiller (TEC)

- Location: TMA top end assembly
- Purpose: control the temperature of the top end assembly

2.7 c

TOP END CHILLER GENERAL VIEW

HOME > MONITOR & CONTROL > THERMAL SYSTEM > TEC SYSTEM > TOP END CHILLER GENERAL VIEW

OPERATION MANAGER
status
Enable

SAFETY SYSTEM
local GIS ETPB WD

Tekniker MEMBER OF BASQUE RESEARCH & TECHNOLOGY ALLIANCE
Rubi Observat

MONITOR & CONTROL
TOP END CHILLER GENERAL VIEW
TOP END CHILLER CABINETS

MONITORING

TOP END CHILLER
status
ENABLED

Under test, may not be final version

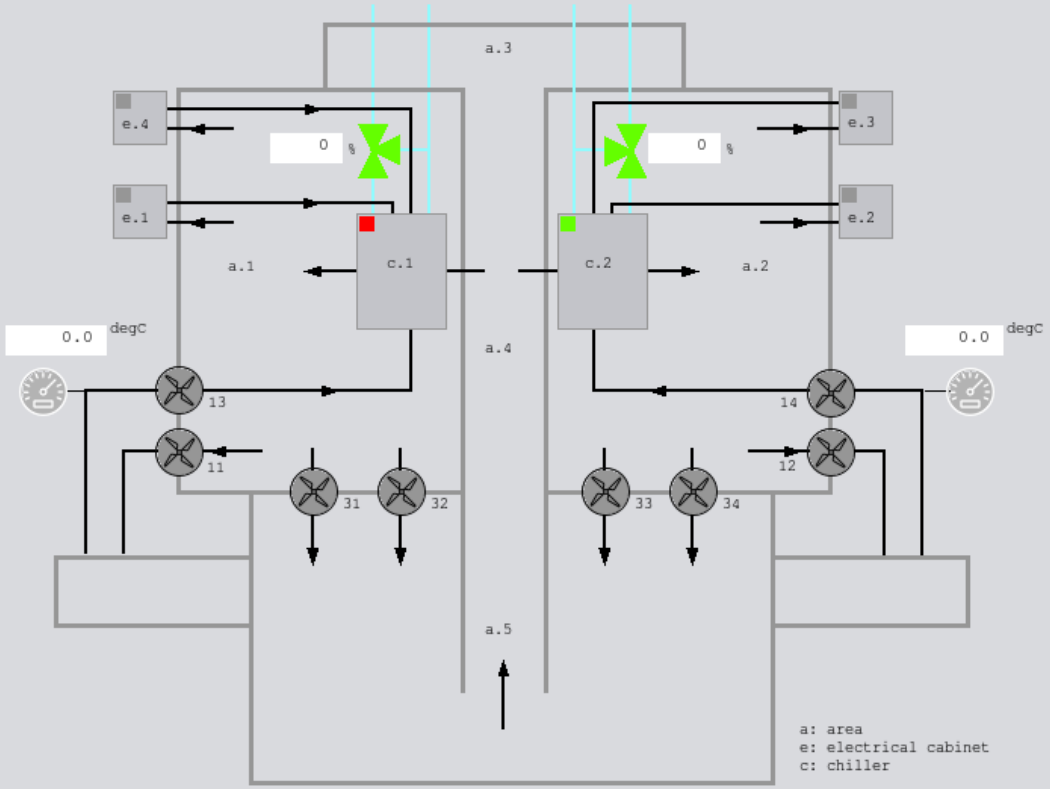

COMMAND
local
remote

MEASURES

area 1	0.0	degC
	0.0	%
area 2	0.0	degC
	0.0	%
area 3	0.0	degC
	0.0	%
area 4	0.0	degC
	0.0	%
area 5	0.0	degC
	0.0	%

CONTROL

ON OFF RESET ALARM

REMOTE CONTROL

ON OFF

1/1

GENERAL
LOCAL

LOCAL: THERE ARE NO ALARMS OR WARNINGS

©Tekniker

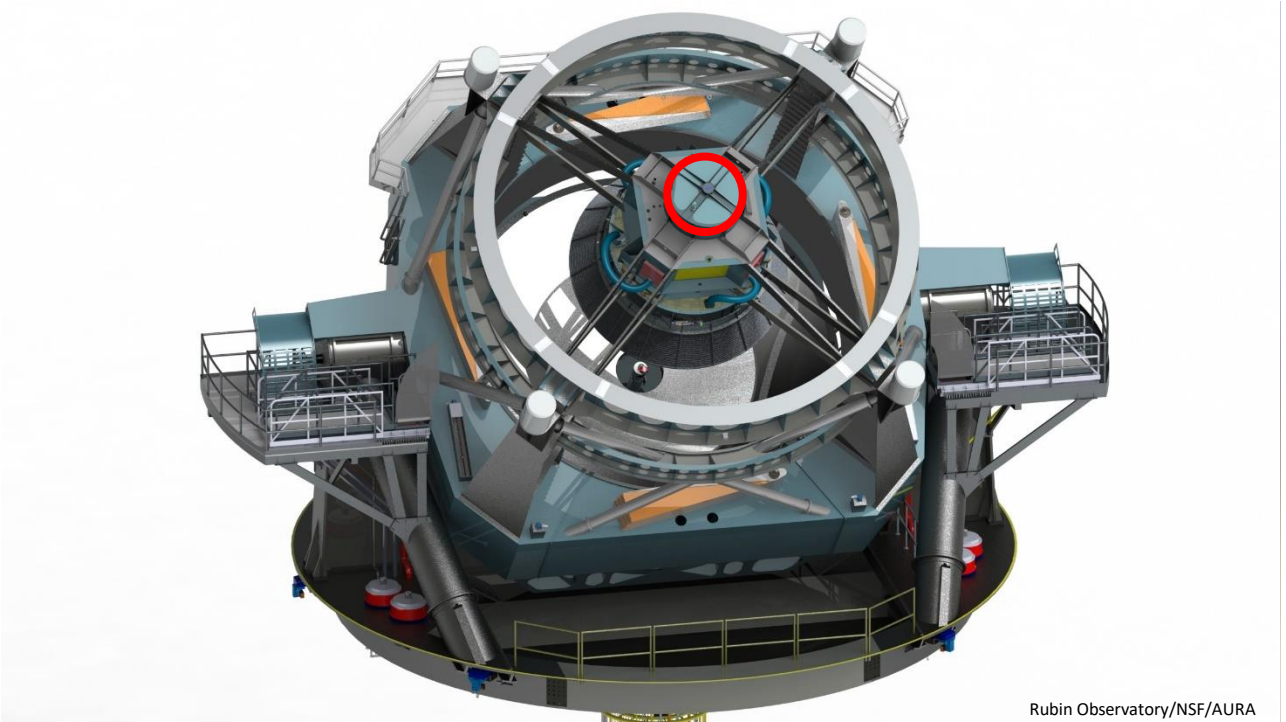

Camera Cable Wrap (CCW)

- Location: TMA top end assembly
- Purpose: follow cameras rotation and guide the cables
- Additional info:
  - 2 bosch motors for redundancy, only uses 1 at a time
  - single drive for these 2 motors inside the Main Cabinet (AZ-0001)
  - 2 lubrication devices, 1 per pinion (motor)
  - 4 limits
    - 2 deviation limits with camera rotator
    - 2 travel limits, at +/- ~90.3 deg

2.7 c

CAMERA CABLE WRAP

HOME > MONITOR & CONTROL > CAMERA CABLE WRAP

OPERATION MANAGER

status: Enable

SAFETY SYSTEM

local | GIS | ETPB | WD

Tekniker — MEMBER OF BASQUE RESEARCH & TECHNOLOGY ALLIANCE

Rubi Observat

MONITORING

CAMERA CABLE WRAP

status	position 1 deg	position 2 deg	published pos. deg
Idle	0.15	0.00	0.00

LIMITS

(+) limit

(-) limit

MAIN VIEW | CURRENT MOVE | MOVE HISTORY

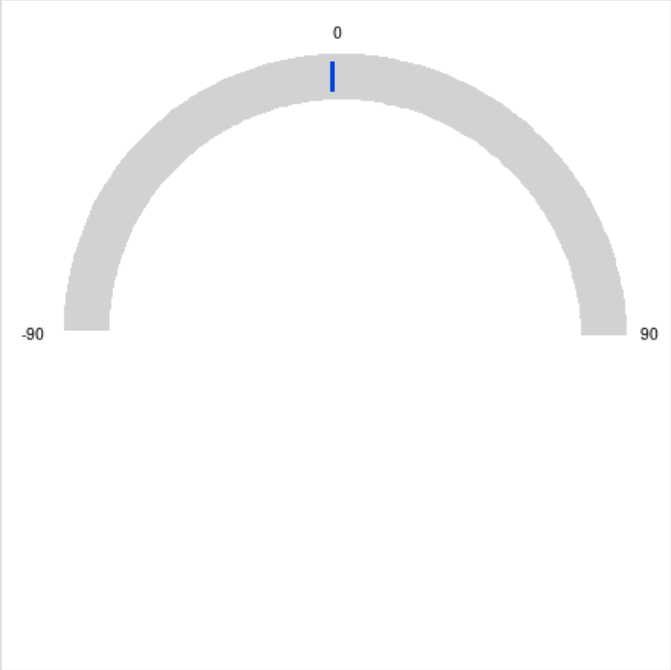

DRIVE 1

run/alarm

drive status: Fault

DRIVE 2

run/alarm

drive status: Fault

INTERLOCKS

active interlocks: Positive Limit Switch Pressed

CONTROL

ON | OFF | RESET ALARM

CABLE WRAP DRIVE SELECTOR

1 | 2 | RESET DRIVES

CAMERA TRACKING

track filename

LOAD | EXECUTE | STOP

JOG

speed %: 100 / 75 / 50 / 25 / 0

MOVE

position deg: 0

speed deg/s: 2.5

MOVE | STOP

GENERAL | LOCAL

LOCAL: CABINETCONTROLLERNOTOK

©Tekniker

Other relevant HW -> Elevation safety overspeed encoder

- Connected to the TMA IS
- Measures Elevation speed to trip an emergency interlock if the maximum is exceeded

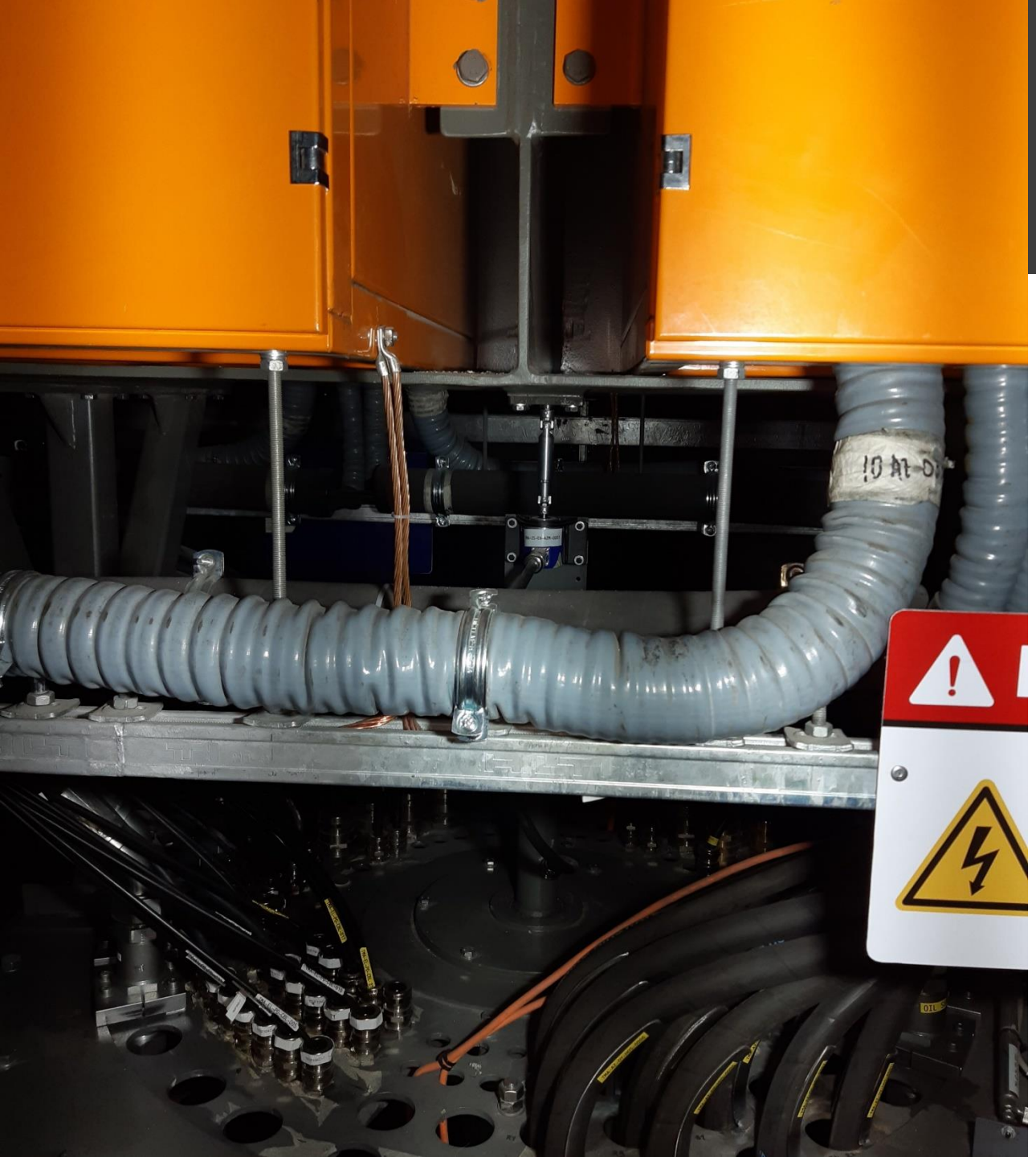

Other relevant HW -> Azimuth safety overspeed encoder

- Connected to the TMA IS
- Measures Azimuth speed to trip an emergency interlock if the maximum is exceeded

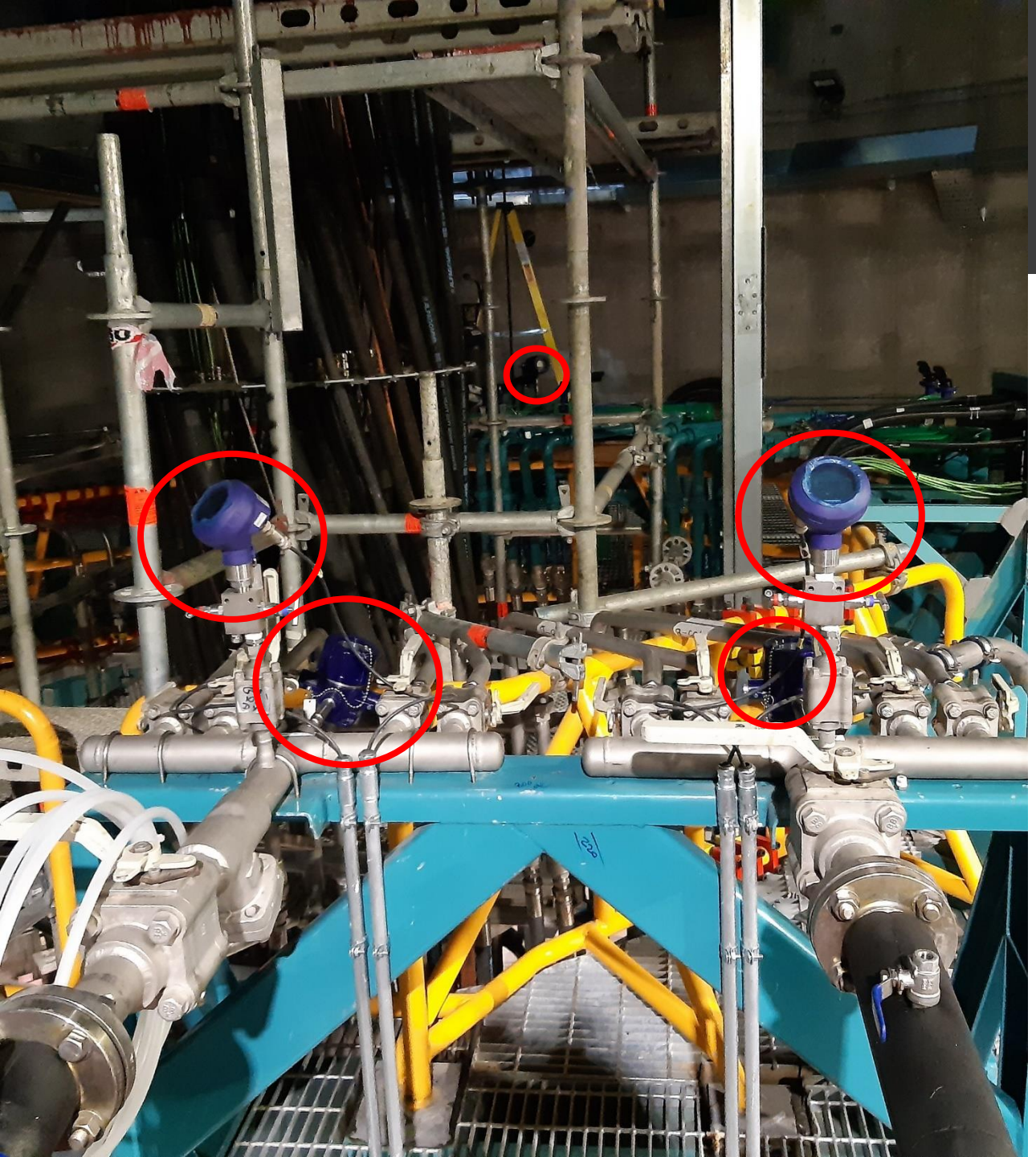

Other relevant HW -> Analog sensors in the TMA

- Temperature and pressure sensors
- Connected to the TMA PXI, through the ethercat I/O modules

12.7 c

COMPRESSED AIR DIST SYST

HOME > MONITOR & CONTROL > FLUID SUPPLY SYSTEM > COMPRESSED AIR DIST SYST

OPERATION MANAGER
status
Enable

SAFETY SYSTEM
local GIS ETPB WD

Tekniker
MEMBER OF BASQUE RESEARCH & TECHNOLOGY ALLIANCE

MONITOR & CONTROL
COMPRESSED AIR DISTRIBUTION SYSTEM
COOLING DISTRIBUTION SYSTEM 1
COOLING DISTRIBUTION SYSTEM 2
COOLING DISTRIBUTION SYSTEM 3
COOLING DISTRIBUTION SYSTEM 4
DYNALENE DISTRIBUTION SYSTEM 1
DYNALENE DISTRIBUTION SYSTEM 2
GENERAL PURPOSE GW DIST. SYST.

MONITORING

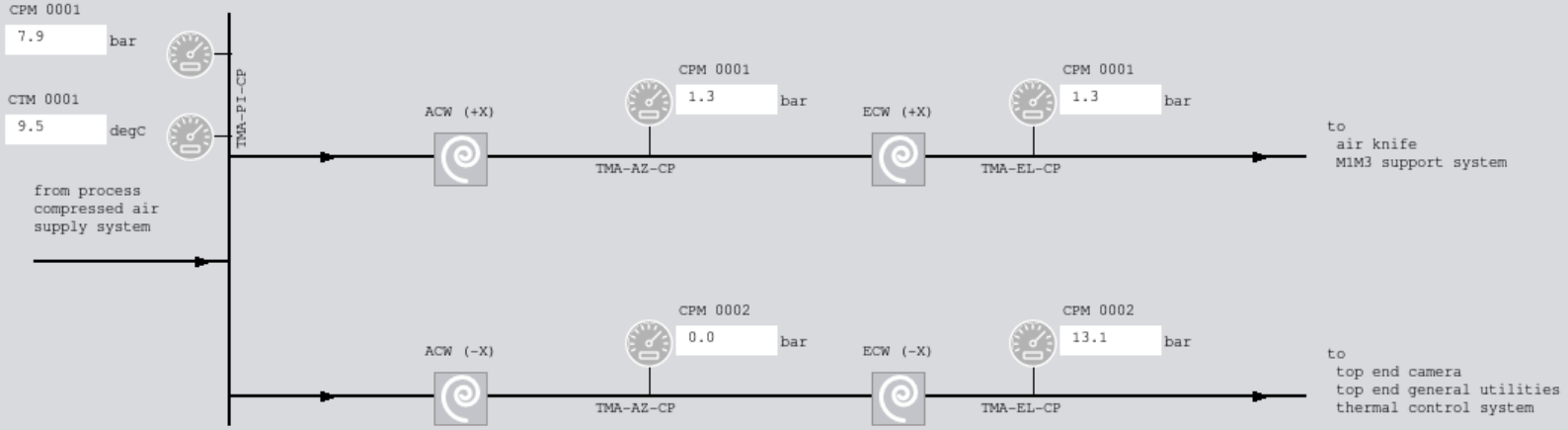

1/1

GENERAL
LOCAL

LOCAL: THERE ARE NO ALARMS OR WARNINGS

©Tekniker

Other relevant HW -> Mirror cover disable switch

- 2, one on each side of the CST, just up the stairs
- Connected to the TMA IS
- Disables the Mirror Cover, no motion allowed when active

Other relevant HW -> ladders and hatches

- These act as interlocks in the TMA IS
- Two ladders under the TMA
- Two hatches in Azimuth platform
- Four hatches in Elevation CST
- These relations can be checked on the Safety matrix here

Tekniker
Parke Teknologikoa
C/ Iñaki Goenaga, 5
20600 Eibar (Gipuzkoa)
Tel: +34 943 20 67 44

www.tekniker.es

©Tekniker