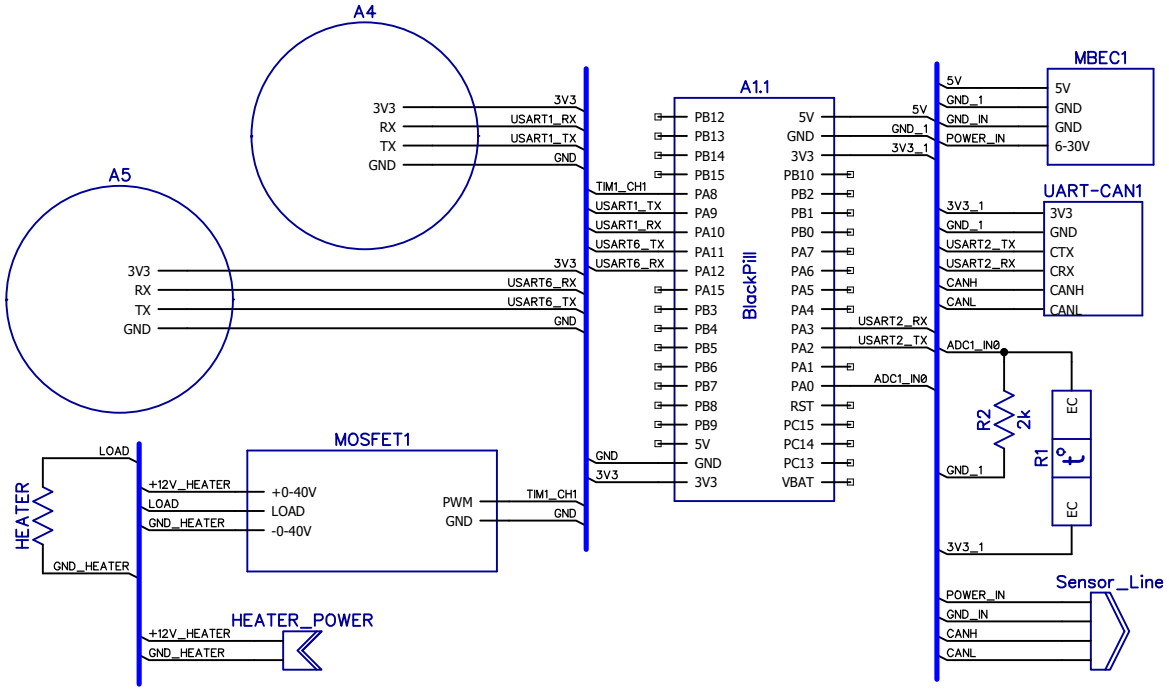

Itemref	Quantity	Title/Name, designation, material, dimension etc			Article No./Reference	
Designed by		Checked by	Approved by - date - 00/00/00	File name	Date 00/00/00	Scale 1:1
					Edition 0	Sheet 1/1