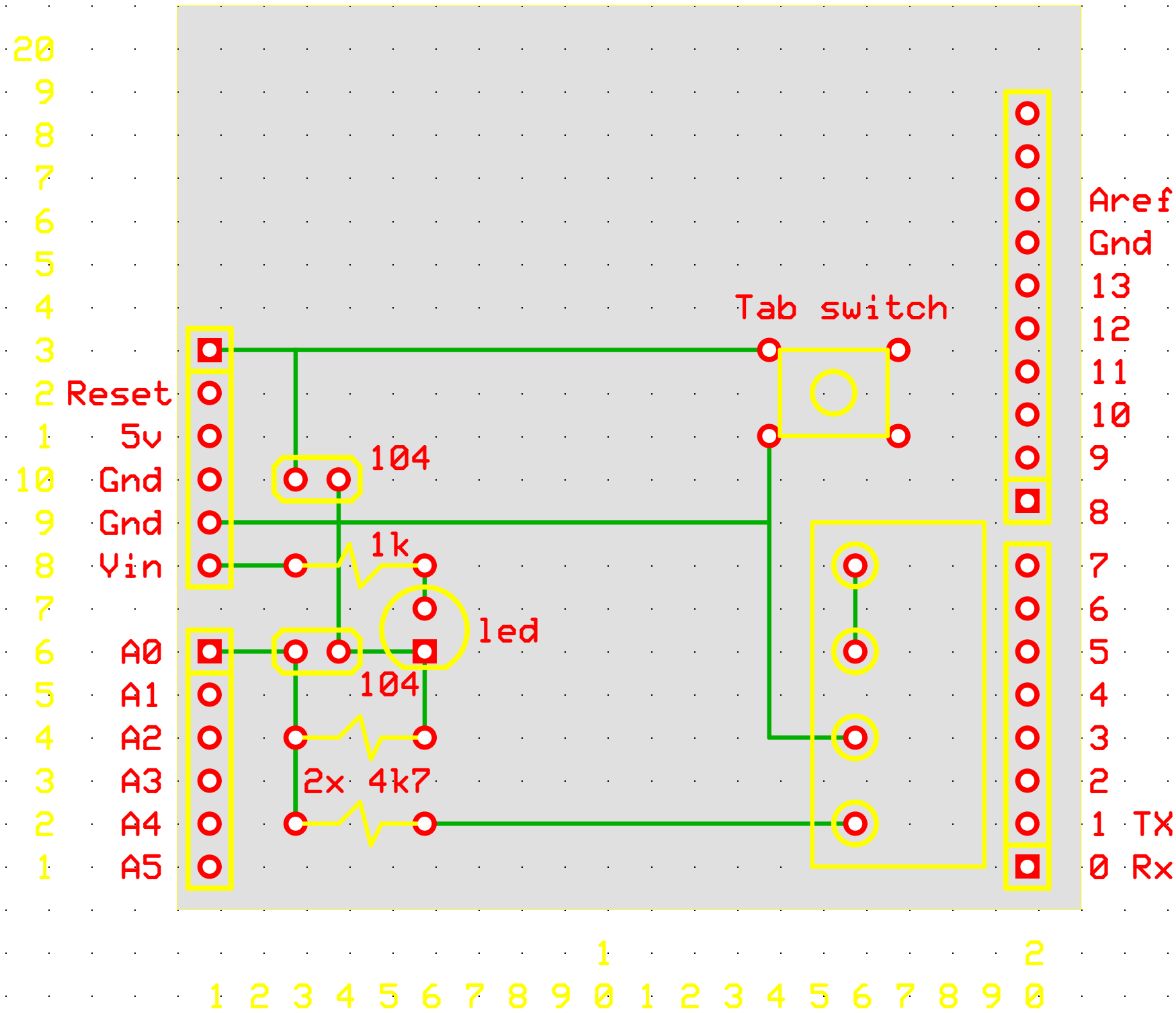

D:\(my data files)\ExpressPCB\uno add on board for sensor.pcb (Silkscreen, Top layer, Bottom layer)