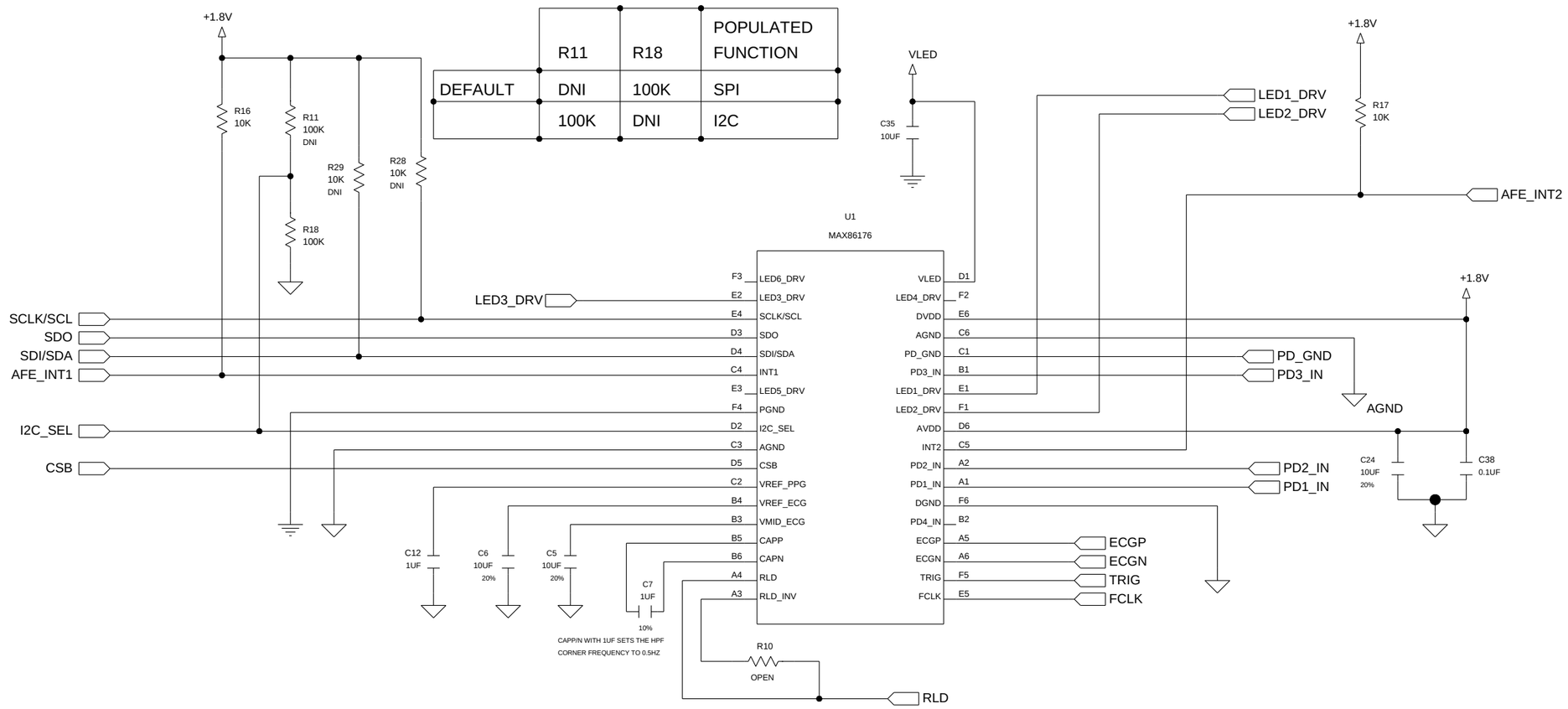

PROJECT TITLE: MAX86176_WRIST_EVKIT_D		
DRAWING TITLE:		
SIZE B	HARDWARE NUMBER:	DATE: 10/05/2020
ENGINEER: -	DRAWN BY: -	REV: D
	TEMPLATE REV: A	SHEET 1 OF 2

CAN BE POPULATED WITH SIT1572 OR
SIT1566, BOTH LOW JITTER OSCILLATORS

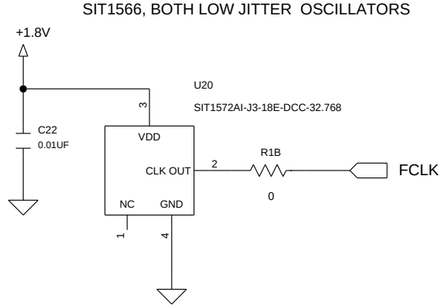

DEFAULT

R1A	R1B	POPULATED FUNCTION ; FCLK SOURCE
0 OHM	DNI	FCLK = 32768HZ CLOCK FROM MCU
DNI	0 OHM	FCLK = 32768HZ LOW JITTER EXT. OSC
DNI	DNI	NO FCLK INPUT.

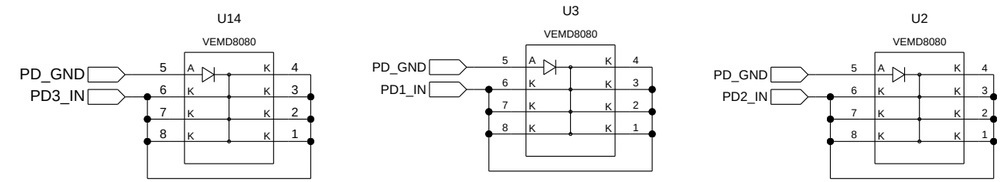

"LED AND PD PLACEMENT"
PD3 | LED | PD1 | PD2

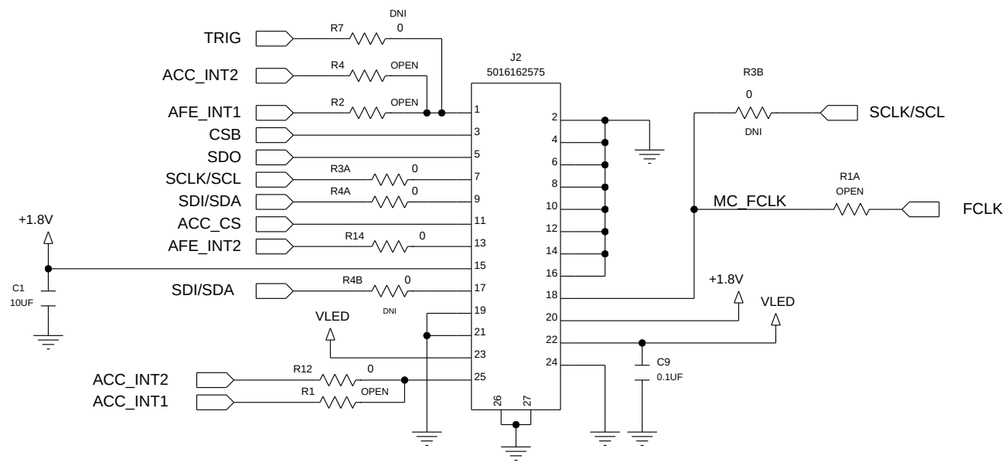

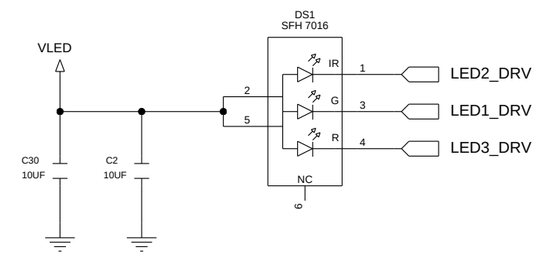

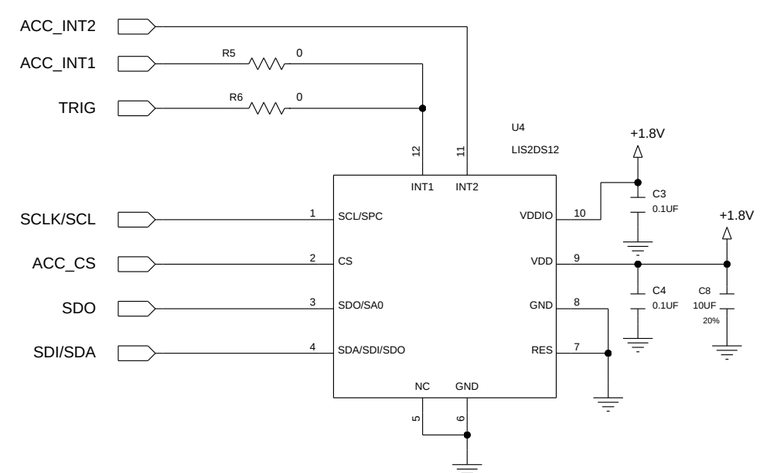

"PIN COMPATIBLE WITH LIS2DW12 AND LIS2DH12"

STAR POINT (KELVIN CONNECTED) GROUND LIMITING
OTHER RETURN CURRENTS FLOWING THROUGH PD_GND

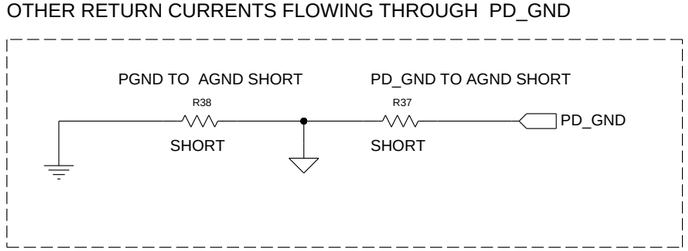

	SPI	I2C	POPULATED FUNCTION
R3A	0 OHM	DNI	SCLK (SPI)
R4A	0 OHM	DNI	SDI (SPI)
R4B	DNI	0 OHM	SDA (I2C)
R3B	DNI	0 OHM	SCL (I2C)
R1A	0 OHM	SPI ONLY	32768HZ FROM MCU

PROJECT TITLE: MAX86176_WRIST_EVKIT_D		
DRAWING TITLE:		
SIZE B	HARDWARE NUMBER:	DATE: 10/05/2020
ENGINEER: -	DRAWN BY: -	REV: D
	TEMPLATE REV: A	SHEET 2 OF 2