REVISIONS				
ZONE	LTR	DESCRIPTION	DATE	APPR.

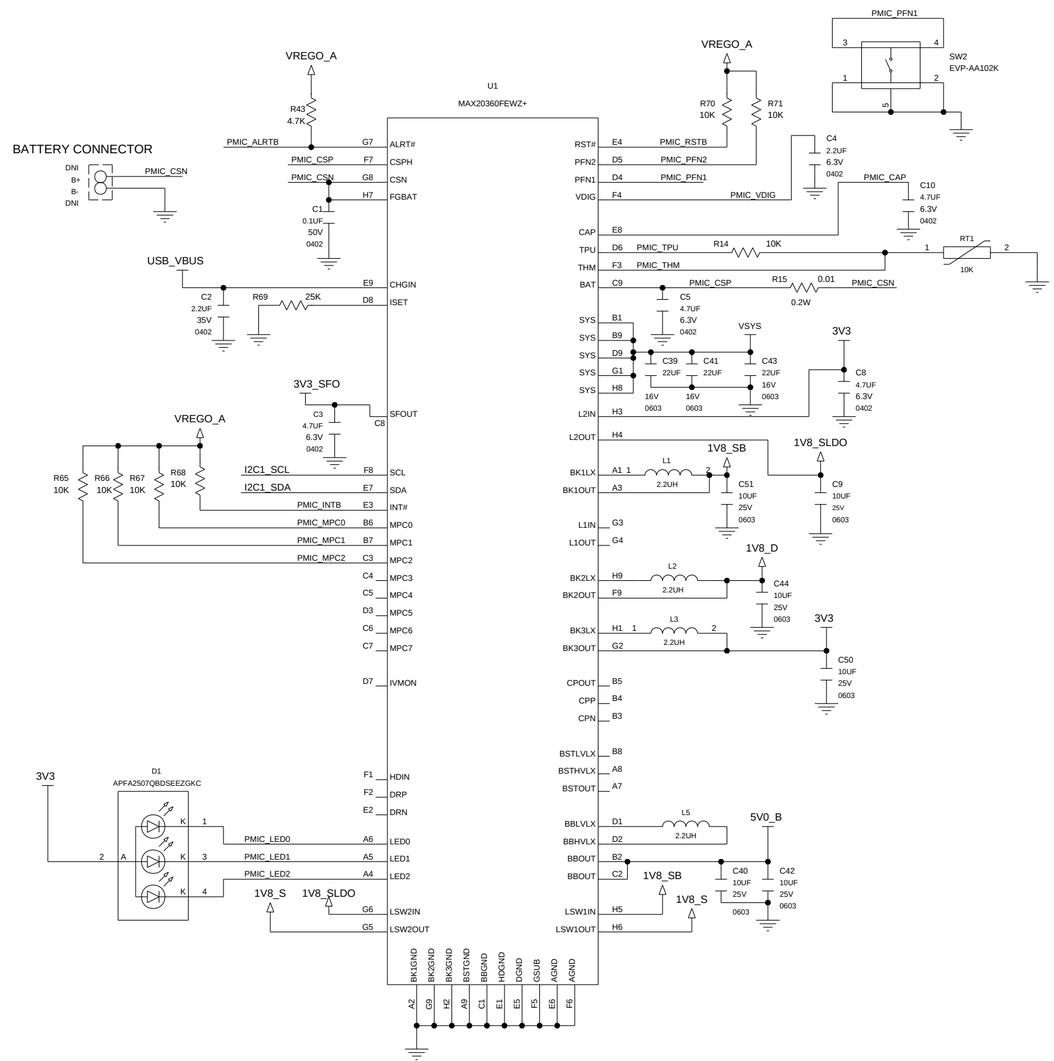

I2C ADDRESS: 0X50 AND 0X51 PMIC(W/R BIT INCLUDED)

I2C ADDRESS: 0XA0 AND 0XA1 ADC HAPTIC(W/R BIT INCLUDED)

I2C ADDRESS: 0X6C AND 0X6D FUEL GAUGE (W/R BIT INCLUDED)

THIS DOCUMENT CONTAINS INFORMATION PROPRIETARY TO MAXIM USE OR DICLOSURE WITHOUT THE WRITTEN PERMISSION OF AN OFFICER OF MAXIM IS EXPRESSLY FORBIDDEN.

PROJECT TITLE: MRD104_MICROBOARD_APPS_B			
DRAWING TITLE:			
SIZE: C	HARDWARE NUMBER: -		DATE: 12/16/2020
ENGINEER: -	DRAWN BY: -		REV.: B
	TEMPLATE REV.: A		SHEET 1 OF 3

REVISIONS				
ZONE	LTR	DESCRIPTION	DATE	APPR.

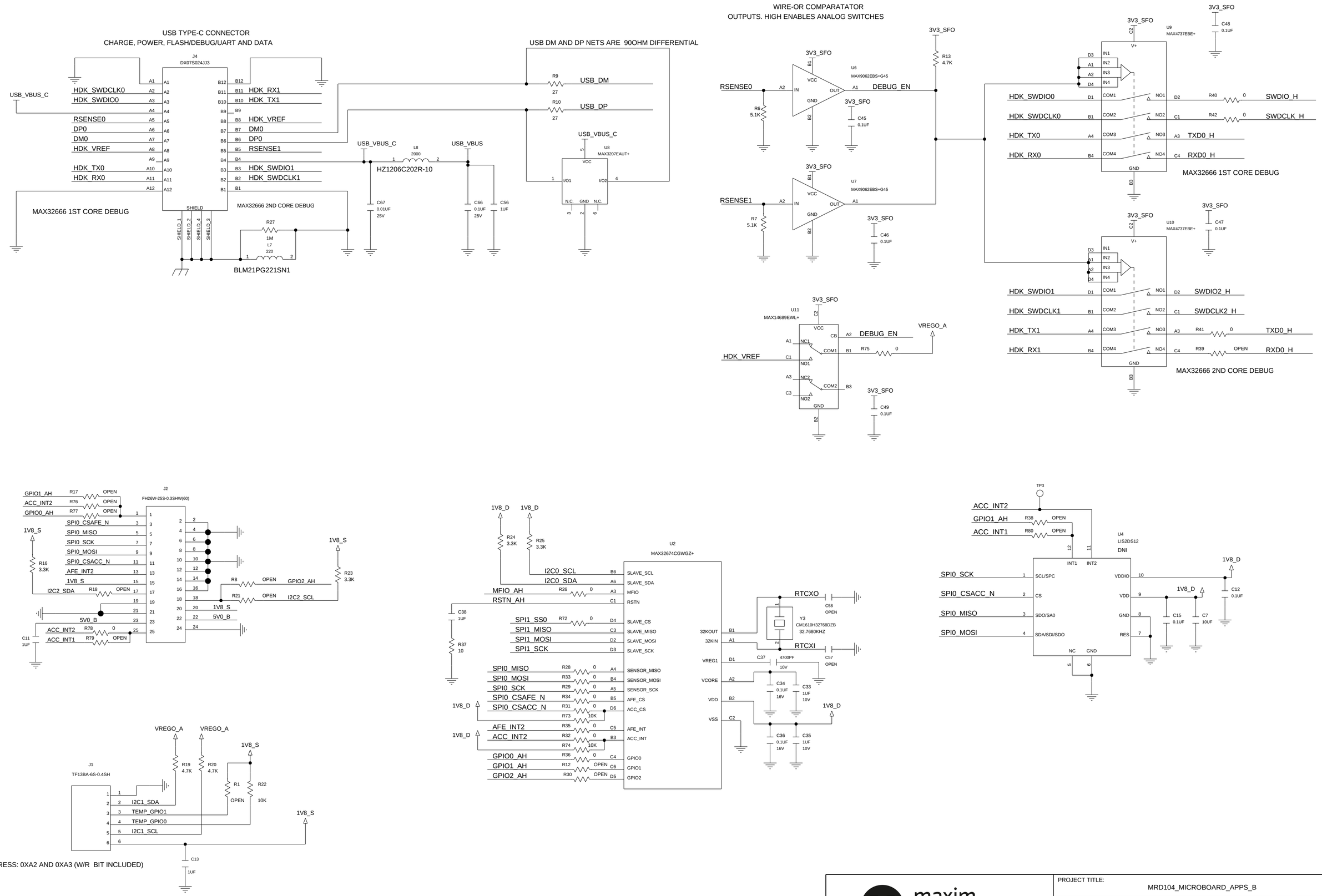

THIS DOCUMENT CONTAINS INFORMATION PROPRIETARY TO MAXIM USE OR DICLOSURE WITHOUT THE WRITTEN PERMISSION OF AN OFFICER OF MAXIM IS EXPRESSLY FORBIDDEN.

PROJECT TITLE: MRD104_MICROBOARD_APPS_B		
DRAWING TITLE:		
SIZE: C	HARDWARE NUMBER: -	DATE: 12/16/2020
ENGINEER: -	DRAWN BY: -	REV.: B
	TEMPLATE REV.: A	SHEET 2 OF 3

REVISIONS				
ZONE	LTR	DESCRIPTION	DATE	APPR.

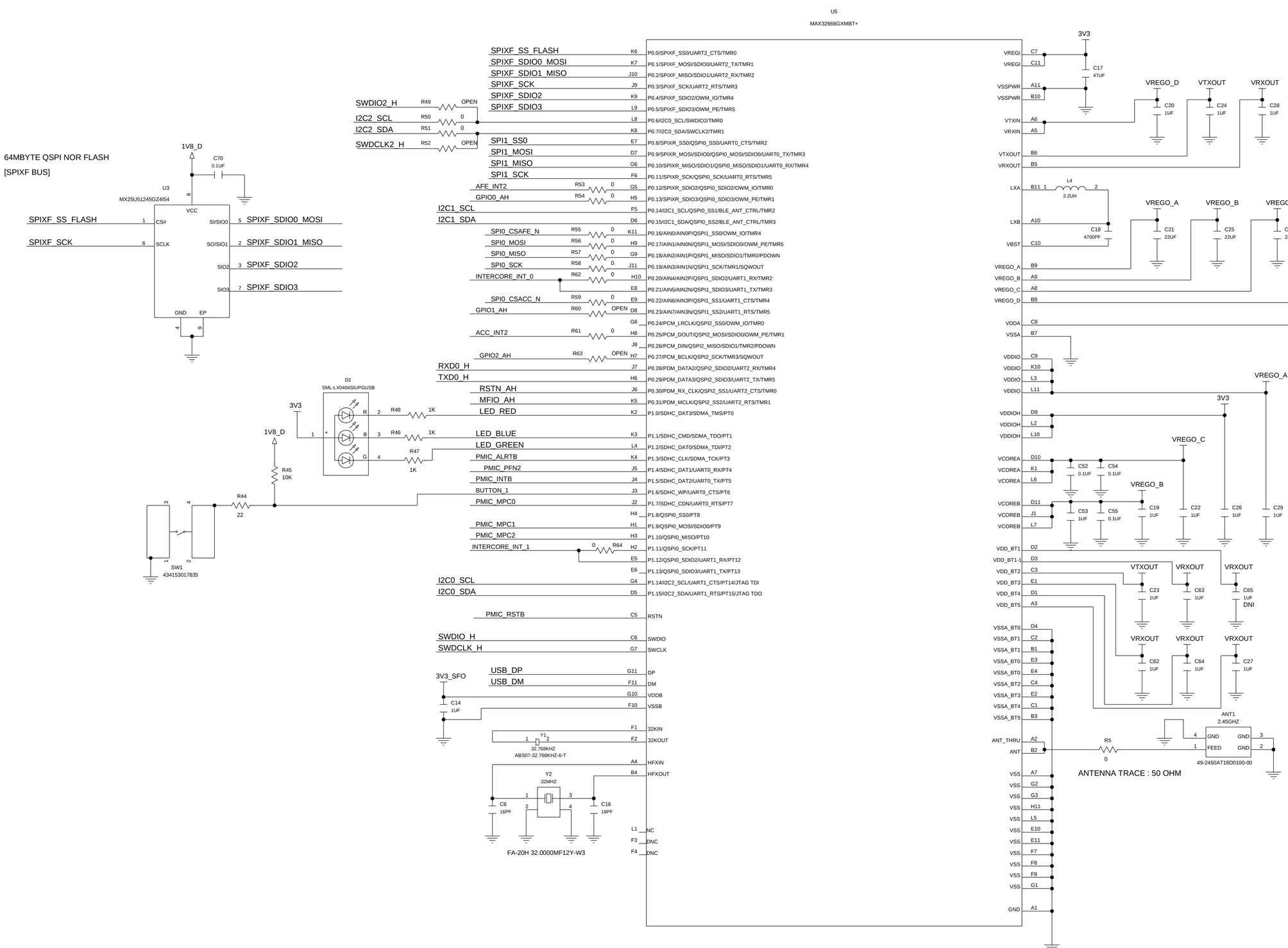

THIS DOCUMENT CONTAINS INFORMATION PROPRIETARY TO MAXIM USE OR DICLOSURE WITHOUT THE WRITTEN PERMISSION OF AN OFFICER OF MAXIM IS EXPRESSLY FORBIDDEN.

PROJECT TITLE: MRD104_MICROBOARD_APPS_B			
DRAWING TITLE:			
SIZE: C	HARDWARE NUMBER: -		DATE: 12/16/2020
ENGINEER: -	DRAWN BY: -		REV.: B
	TEMPLATE REV.: A		SHEET 3 OF 3