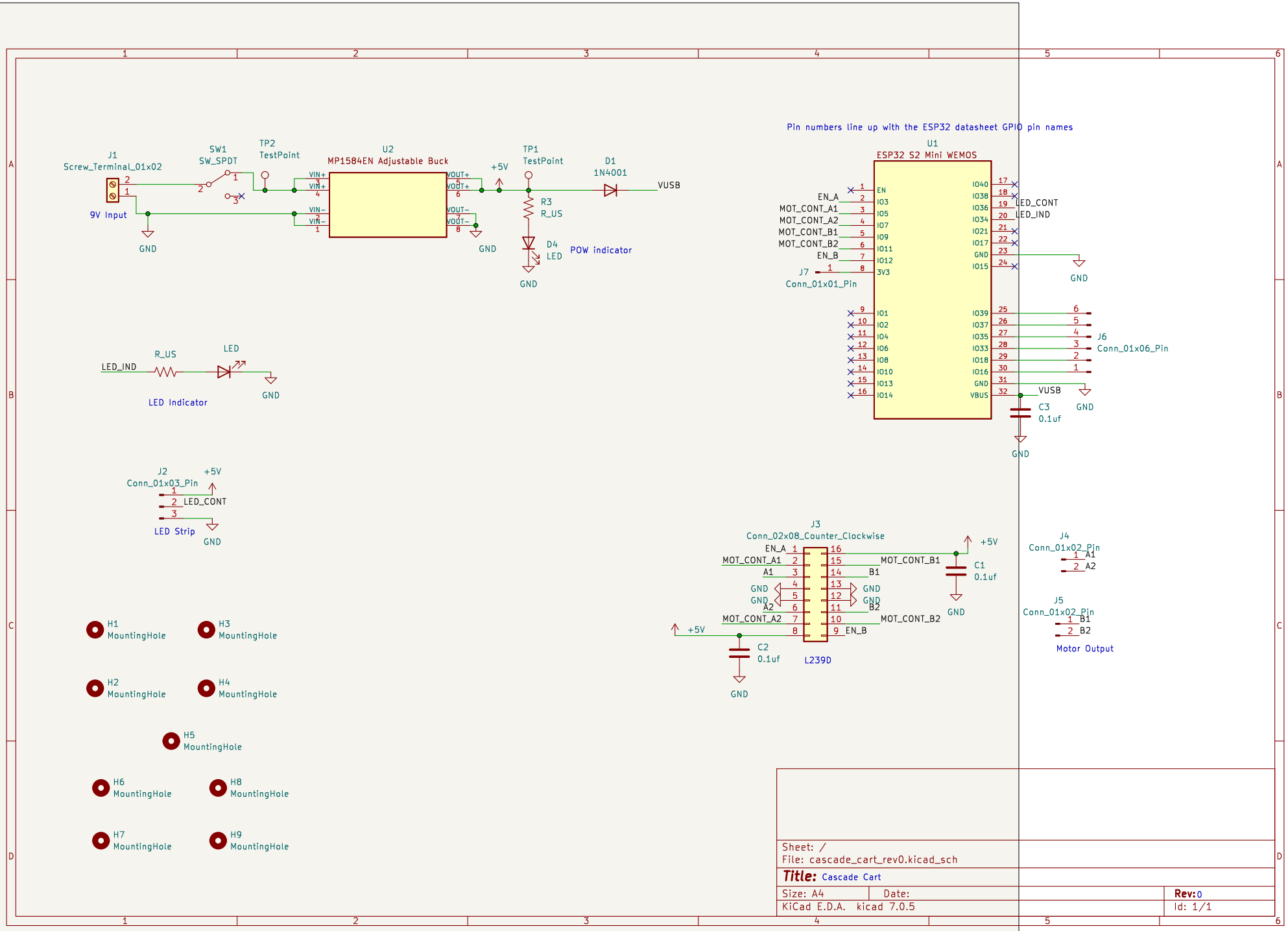
Pin numbers line up with the ESP32 datasheet GPIO pin names
J1
Screw_Terminal_01x02
9V Input
SW1
SW_SPDT
TP2
TestPoint
U2
MP1584EN Adjustable Buck
VIN+
VIN−
VOUT+
VOUT−
+5V
TP1
TestPoint
R3
R_US
D4
LED
POW indicator
D1
1N4001
VUSB
GND
LED_IND
R_US
LED
LED Indicator
U1
ESP32 S2 Mini WEMOS
EN_A
MOT_CONT_A1
MOT_CONT_A2
MOT_CONT_B1
MOT_CONT_B2
EN_B
J7
Conn_01x01_Pin
LED_CONT
LED_IND
J6
Conn_01x06_Pin
VUSB
C3
0.1uf
J2
Conn_01x03_Pin
LED_CONT
LED Strip
J3
Conn_02x08_Counter_Clockwise
EN_A
MOT_CONT_A1
A1
A2
MOT_CONT_A2
MOT_CONT_B1
B1
B2
MOT_CONT_B2
EN_B
C1
0.1uf
C2
0.1uf
L239D
J4
Conn_01x02_Pin
A1
A2
J5
Conn_01x02_Pin
B1
B2
Motor Output
H1 MountingHole
H2 MountingHole
H3 MountingHole
H4 MountingHole
H5 MountingHole
H6 MountingHole
H7 MountingHole
H8 MountingHole
H9 MountingHole
Sheet: /
File: cascade_cart_rev0.kicad_sch
Title: Cascade Cart
Size: A4
Date:
Rev: 0
KiCad E.D.A. kicad 7.0.5
Id: 1/1