/

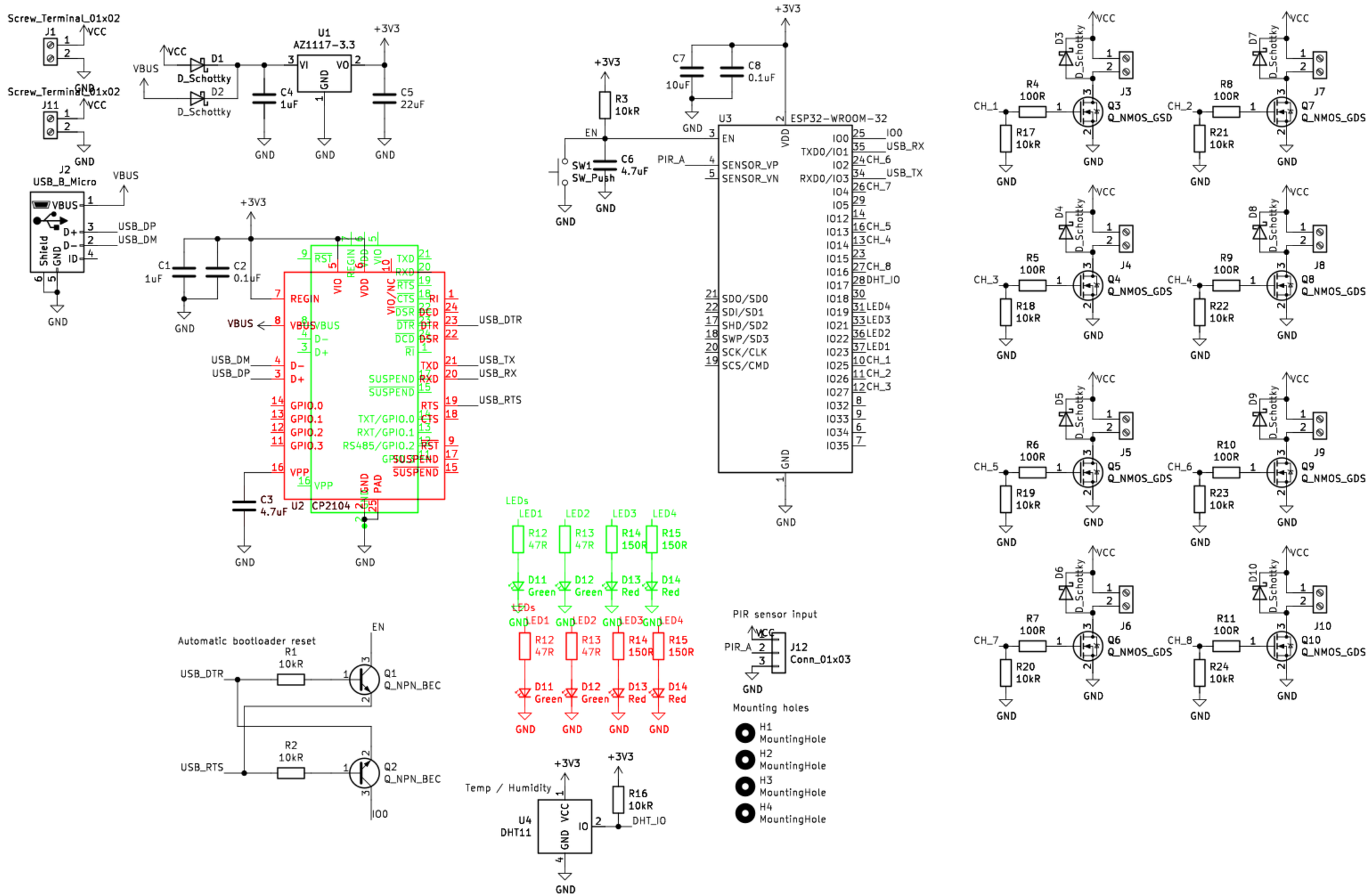
Screw_Terminal_01x02
J1
VCC
GND
Screw_Terminal_01x02
J11
VCC
GND
J2
USB_B_Micro
VBUS
USB_DP
USB_DM
Shield
GND
ID
D1
D_Schottky
D2
D_Schottky
U1
AZ1117-3.3
VI
VO
GND
C4
1uF
C5
22uF
+3V3
C1
1uF
C2
0.1uF
U2
CP2104
REGIN
VBUS
D-
D+
GPIO.0
GPIO.1
GPIO.2
GPIO.3
VPP
VIO
VDD
RST
TXD
RXD
RTS
CTS
DSR
DTR
DCD
RI
SUSPEND
TXT/GPIO.0
RXT/GPIO.1
RS485/GPIO.2
GND PAD
USB_DTR
USB_TX
USB_RX
USB_RTS
C3
4.7uF
U3
ESP32-WROOM-32
EN
VDD
SENSOR_VP
SENSOR_VN
SDO/SD0
SDI/SD1
SHD/SD2
SWP/SD3
SCK/CLK
SCS/CMD
IO0
TXD0/IO1
IO2
RXD0/IO3
IO4
IO5
IO12
IO13
IO14
IO15
IO16
IO17
IO18
IO19
IO21
IO22
IO23
IO25
IO26
IO27
IO32
IO33
IO34
IO35
CH_1
CH_2
CH_3
CH_4
CH_5
CH_6
CH_7
CH_8
DHT_IO
LED4
LED3
LED2
LED1
C7
10uF
C8
0.1uF
R3
10kR
SW1
SW_Push
C6
4.7uF
PIR_A
LEDs
LED1
LED2
LED3
LED4
R12
47R
R13
47R
R14
150R
R15
150R
D11
Green
D12
Green
D13
Red
D14
Red
Automatic bootloader reset
R1
10kR
Q1
Q_NPN_BEC
R2
10kR
Q2
Q_NPN_BEC
Temp / Humidity
U4
DHT11
VCC
IO
R16
10kR
PIR sensor input
J12
Conn_01x03
Mounting holes
H1
MountingHole
H2
MountingHole
H3
MountingHole
H4
MountingHole
D3
D4
D5
D6
D7
D8
D9
D10
D_Schottky
R4
100R
R5
100R
R6
100R
R7
100R
R8
100R
R9
100R
R10
100R
R11
100R
R17
10kR
R18
10kR
R19
10kR
R20
10kR
R21
10kR
R22
10kR
R23
10kR
R24
10kR
J3
J4
J5
J6
J7
J8
J9
J10
Q3
Q_NMOS_GSD
Q4
Q_NMOS_GDS
Q5
Q_NMOS_GDS
Q6
Q_NMOS_GDS
Q7
Q_NMOS_GDS
Q8
Q_NMOS_GDS
Q9
Q_NMOS_GDS
Q10
Q_NMOS_GDS