Miniature Reflective Object Sensor

QRE1113, QRE1113GR, QRE1114GR

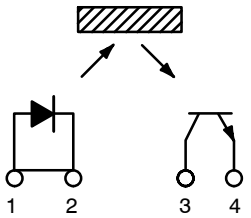

Pin 1: Anode
Pin 2: Cathode
Pin 3: Collector
Pin 4: Emitter

Features

- Phototransistor Output
- No Contact Surface Sensing
- Miniature Package
- Lead Form Style: Gull Wing
- Two Leadform Options:
  - Through Hole (QRE1113)
  - SMT Gull Wing (QRE1113GR & QRE1114GR)
- Two Packaging Options:
  - Tube (QRE1113)
  - Tape and Reel (QRE1113GR & QRE1114GR)
- $I_{C(ON)}$ Options:
  - 0.1 mA min (QRE1113 & QRE1113GR)
  - 0.3 mA to 0.6 mA (QRE1114GR)

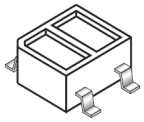

REFLECTIVE RECTANGULAR SURFACE MOUNT CASE 100CY

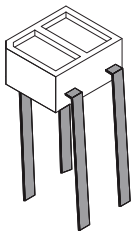

REFLECTIVE RECTANGULAR THROUGH HOLE CASE 100AQ

MAXIMUM RATINGS (T_A = 25°C unless otherwise noted)

Symbol	Parameter	Value	Unit
T_{OPR}	Operating Temperature	−40 to +85	°C
T_{STG}	Storage Temperature	−40 to +90	°C
T_{SOL-I}	Soldering Temperature (Iron) (Notes 2, 3, 4)	240 for 5 s	°C
T_{SOL-F}	Soldering Temperature (Flow) (Notes 3, 4)	260 for 10 s	°C
EMITTER			
I_F	Continuous Forward Current	50	mA
V_R	Reverse Voltage	5	V
I_{FP}	Peak Forward Current (Note 5)	1	A
P_D	Power Dissipation (Note 1)	75	mW
SENSOR			
V_{CEO}	Collector-Emitter Voltage	30	V
V_{ECO}	Emitter-Collector Voltage	5	V
I_C	Collector Current	20	mA
P_D	Power Dissipation (Note 1)	50	mW

Stresses exceeding those listed in the Maximum Ratings table may damage the device. If any of these limits are exceeded, device functionality should not be assumed, damage may occur and reliability may be affected.

1. Derate power dissipation linearly 1.00 mW/°C above 25°C.
2. RMA flux is recommended.
3. Methanol or isopropyl alcohols are recommended as cleaning agents.
4. Soldering iron 1/16″ (1.6 mm) from housing.
5. Pulse conditions: tp = 100 μs; T = 10 ms.

ORDERING INFORMATION

Device	Package	Shipping†
QRE1113	Reflective Rectangular (Through Hole)	1600 / Tube
QRE1113GR & QRE1114GR	Reflective Rectangular (Surface Mount)	1000 / Tape & Reel

†For information on tape and reel specifications, including part orientation and tape sizes, please refer to our Tape and Reel Packaging Specifications Brochure, BRD8011/D.

© Semiconductor Components Industries, LLC, 2002

December, 2024 − Rev. 9
Publication Order Number:
QRE1113/D

ELECTRICAL/OPTICAL CHARACTERISTICS (T_A = 25°C unless otherwise noted)

Symbol	Parameter	Conditions		Min	Typ	Max	Unit
INPUT DIODE							
V_F	Forward Voltage	I_F = 20 mA			1.2	1.6	V
I_R	Reverse Leakage Current	V_R = 5 V				10	μA
λ_{PE}	Peak Emission Wavelength	I_F = 20 mA			940		nm
OUTPUT TRANSISTOR							
I_D	Collector-Emitter Dark Current	I_F = 0 mA, V_{CE} = 20 V				100	nA
COUPLED							
$I_{C(ON)}$	On-State Collector Current	I_F = 20 mA, V_{CE} = 5 V (Note 6)	QRE1113 & QRE1113GR	0.10	0.90		mA
			QRE1114GR	0.30		0.60	mA
I_{CX}	Cross-Talk Collector Current	I_F = 20 mA, V_{CE} = 5 V (Note 7)				1	μA
$V_{CE(SAT)}$	Saturation Voltage	I_F = 20 mA, I_C = 50 μA (Note 6)				0.3	V
t_r	Rise Time	V_{CC} = 5 V, $I_{C(ON)}$ = 100 μA, R_L = 1 kΩ			20		μs
t_f	Fall Time				20		μs

Product parametric performance is indicated in the Electrical Characteristics for the listed test conditions, unless otherwise noted. Product performance may not be indicated by the Electrical Characteristics if operated under different conditions.

6. Measured using an aluminum alloy mirror at d = 1 mm.
7. No reflective surface at close proximity.

REFLOW PROFILE

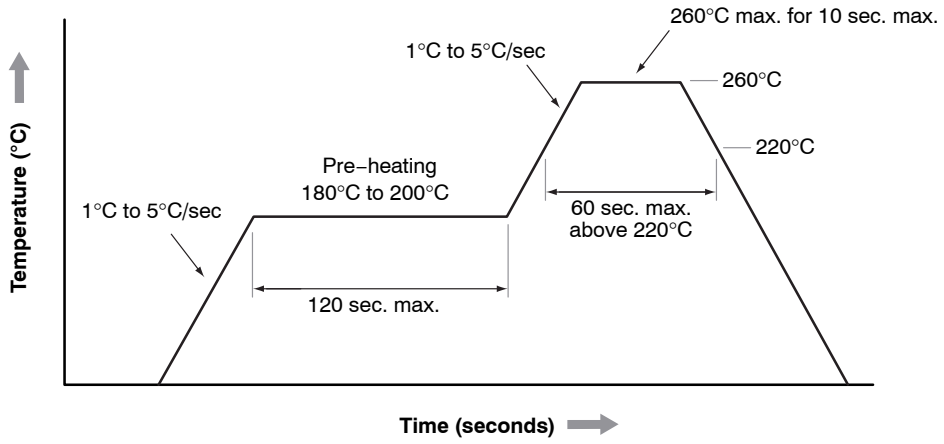

Figure 1. Reflow Profile

TYPICAL PERFORMANCE CURVES

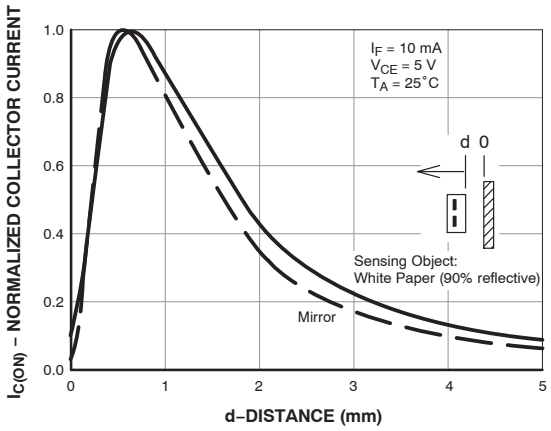

Figure 2. Normalized Collector Current vs. Distance between Device and Reflector

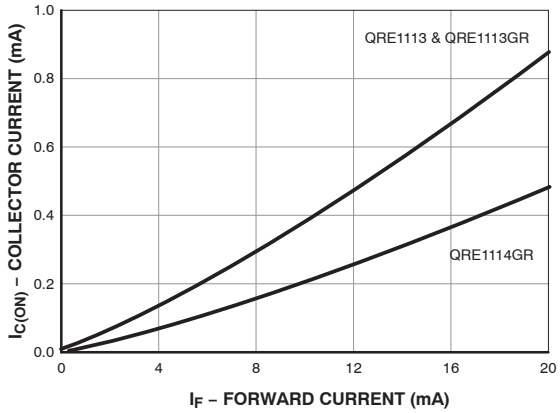

Figure 3. Collector Current vs. Forward Current

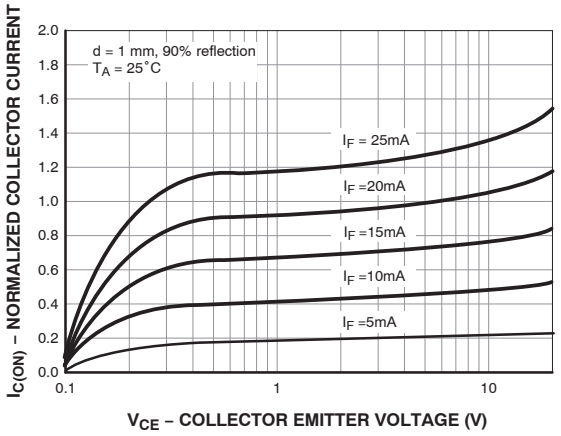

Figure 4. Normalized Collector Current vs. Collector to Emitter Voltage

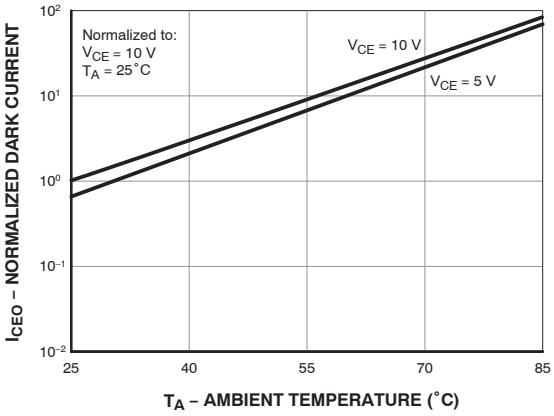

Figure 5. Collector Emitter Dark Current (Normalized) vs. Ambient Temperature

TYPICAL PERFORMANCE CURVES (CONTINUED)

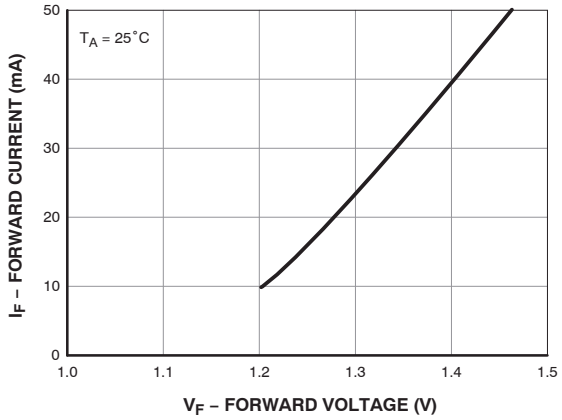

Figure 6. Forward Current vs. Forward Voltage

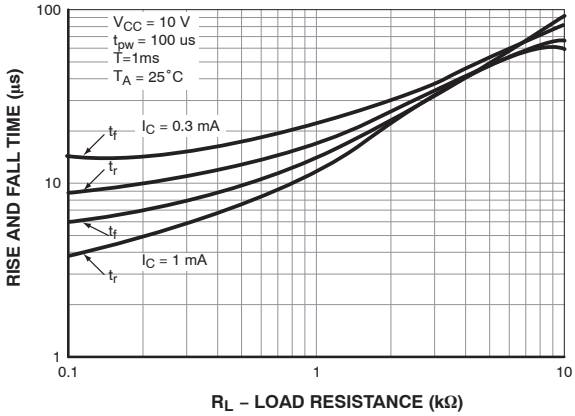

Figure 7. Rise and Fall Time vs. Load Resistance

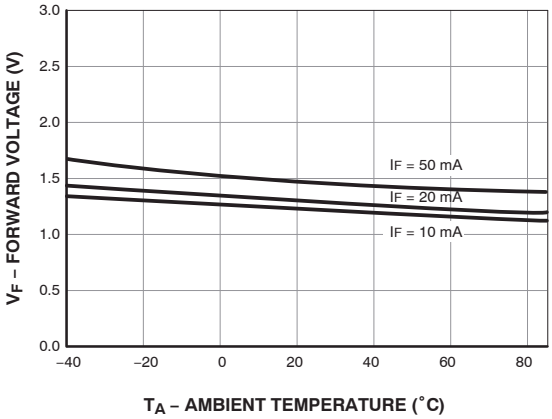

Figure 8. Forward Voltage vs. Ambient Temperature

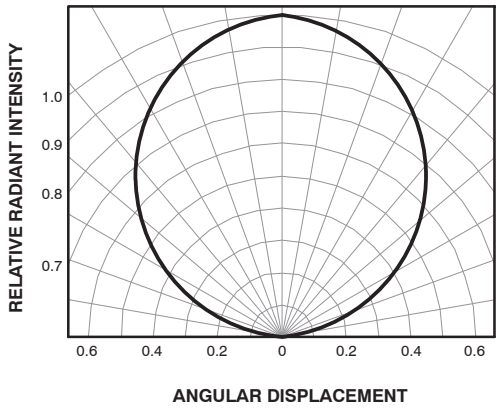

Figure 9. Radiation Diagram

TAPING DIMENSIONS FOR GR OPTION

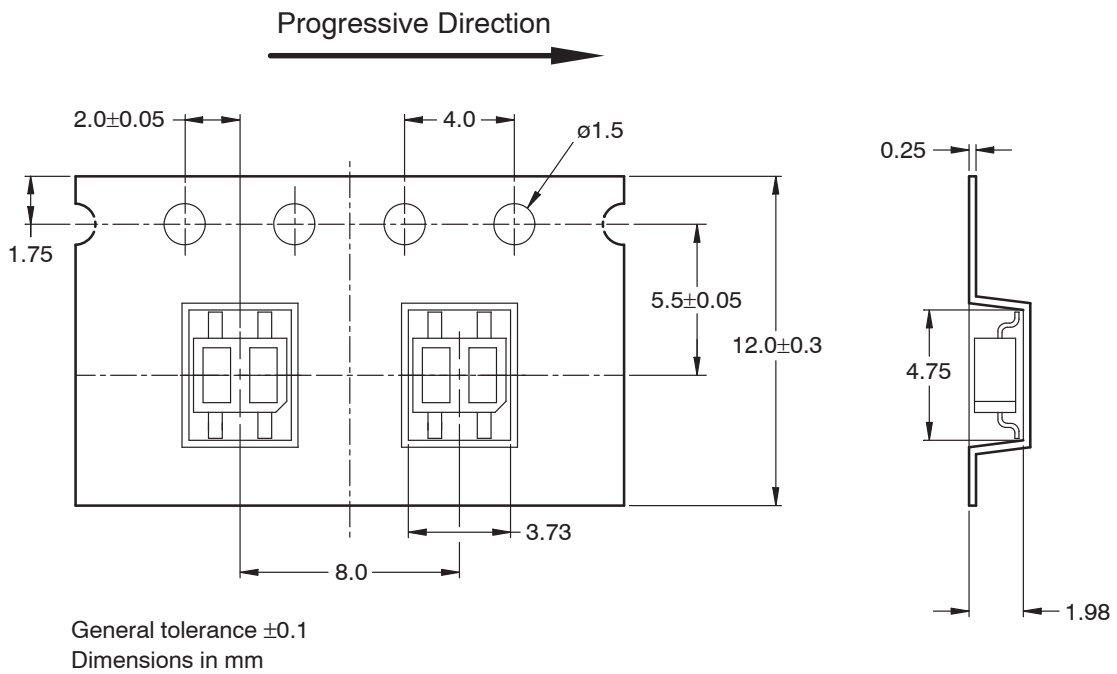

Figure 10. Taping Dimensions for GR Option

REEL DIMENSIONS

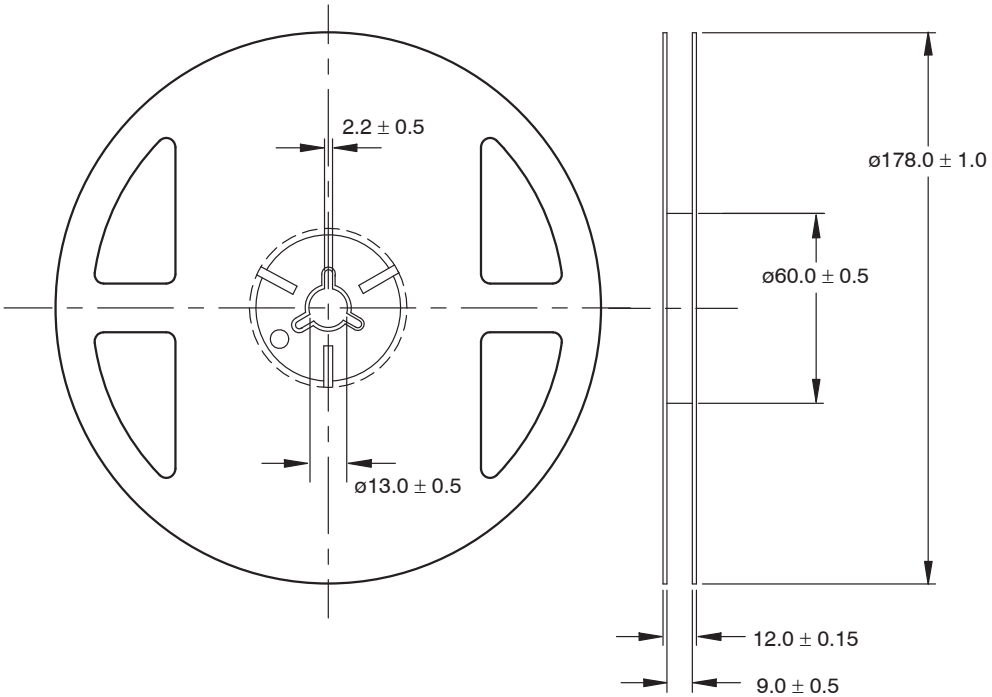

Figure 11. Reel Dimensions

Precautionary Notes

1. Refer to application note AND8003/D, “Storage and Handling of Dry Packed Surface Mounted Devices” for details of handling procedure.
2. Product soldering terminals are silver plated and oxidization may occur with prolonged exposure to ambient environment. Oxidized terminal may have poor solderability performance. Keep unsealed devices in moisture barrier bag sealed with desiccant or in dry cabinet at <5% relative humidity.
3. Store PCB in sealed moisture barrier bag together with desiccant or store in dry cabinet at <5% relative humidity. Mounted device that has been exposed to ambient environment for long period of time may suffer moisture related damage if PCB is subjected to subsequent high temperature processes.

REFLECTIVE RECTANGULAR THROUGH HOLE
CASE 100AQ
ISSUE O

DATE 30 SEP 2016

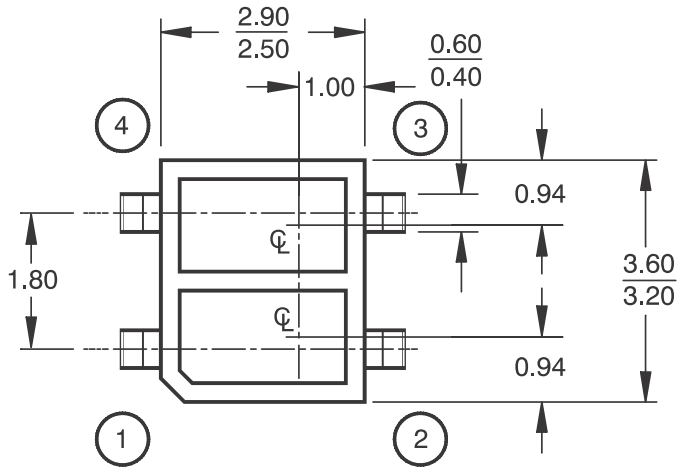

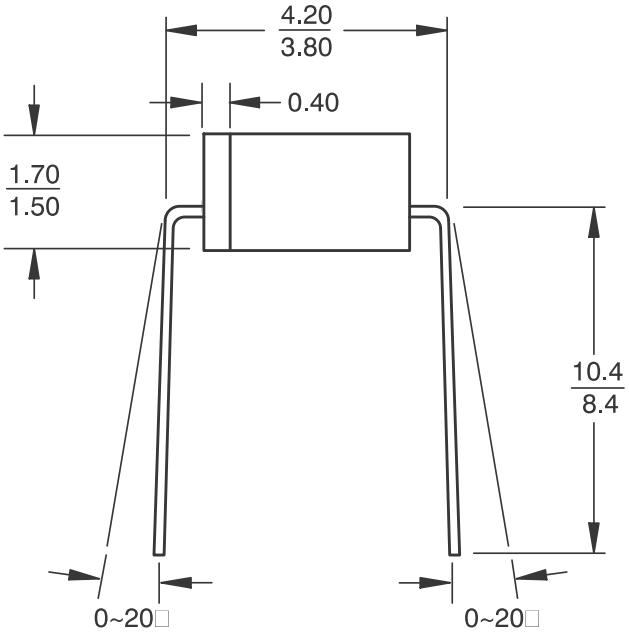

Notes:

1. Dimensions for all drawings are in millimeters.
2. Tolerance of ±0.15mm on all non−nominal dimensions

DOCUMENT NUMBER:	**98AON13409G**	Electronic versions are uncontrolled except when accessed directly from the Document Repository. Printed versions are uncontrolled except when stamped "CONTROLLED COPY" in red.
DESCRIPTION:	**REFLECTIVE RECTANGULAR THROUGH HOLE**	**PAGE 1 OF 1**

onsemi and onsemi are trademarks of Semiconductor Components Industries, LLC dba **onsemi** or its subsidiaries in the United States and/or other countries. **onsemi** reserves the right to make changes without further notice to any products herein. **onsemi** makes no warranty, representation or guarantee regarding the suitability of its products for any particular purpose, nor does **onsemi** assume any liability arising out of the application or use of any product or circuit, and specifically disclaims any and all liability, including without limitation special, consequential or incidental damages. **onsemi** does not convey any license under its patent rights nor the rights of others.

ARUSM–313 / REFLECTIVE RECTANGULAR SURFACE MOUNT
CASE 100CY
ISSUE O

DATE 31 JAN 2017

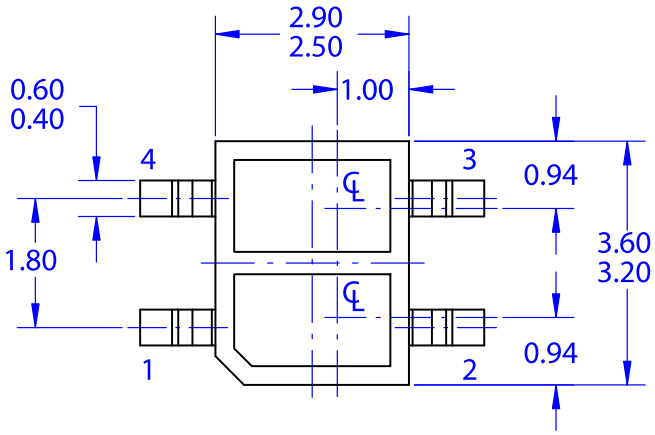

TOP VIEW

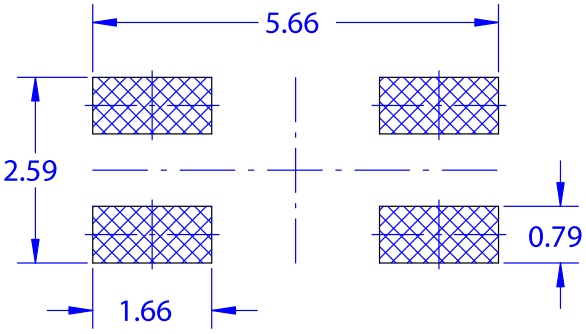

LAND PATTERN RECOMMENDATION

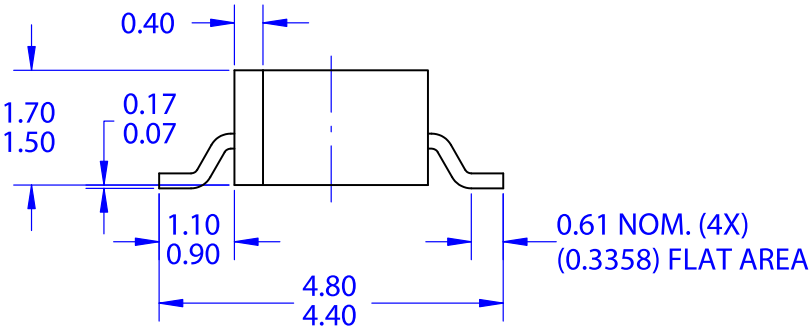

SIDE VIEW

NOTES:
A. NO INDUSTRY STANDARD APPLIES TO THIS PACKAGE
B. ALL DIMENSIONS ARE IN MILLIMETERS
C. TOLERANCE OF ±0.15MM ON ALL NON-NOMINAL DIMENSIONS

DOCUMENT NUMBER:	**98AON13407G**	Electronic versions are uncontrolled except when accessed directly from the Document Repository. Printed versions are uncontrolled except when stamped "CONTROLLED COPY" in red.	
DESCRIPTION:	**ARUSM–313 / REFLECTIVE RECTANGULAR SURFACE MOUNT**		**PAGE 1 OF 1**

onsemi and onsemi are trademarks of Semiconductor Components Industries, LLC dba **onsemi** or its subsidiaries in the United States and/or other countries. **onsemi** reserves the right to make changes without further notice to any products herein. **onsemi** makes no warranty, representation or guarantee regarding the suitability of its products for any particular purpose, nor does **onsemi** assume any liability arising out of the application or use of any product or circuit, and specifically disclaims any and all liability, including without limitation special, consequential or incidental damages. **onsemi** does not convey any license under its patent rights nor the rights of others.

onsemi, onsemi, and other names, marks, and brands are registered and/or common law trademarks of Semiconductor Components Industries, LLC dba "**onsemi**" or its affiliates and/or subsidiaries in the United States and/or other countries. **onsemi** owns the rights to a number of patents, trademarks, copyrights, trade secrets, and other intellectual property. A listing of **onsemi**'s product/patent coverage may be accessed at www.onsemi.com/site/pdf/Patent−Marking.pdf. **onsemi** reserves the right to make changes at any time to any products or information herein, without notice. The information herein is provided "as−is" and **onsemi** makes no warranty, representation or guarantee regarding the accuracy of the information, product features, availability, functionality, or suitability of its products for any particular purpose, nor does **onsemi** assume any liability arising out of the application or use of any product or circuit, and specifically disclaims any and all liability, including without limitation special, consequential or incidental damages. Buyer is responsible for its products and applications using **onsemi** products, including compliance with all laws, regulations and safety requirements or standards, regardless of any support or applications information provided by **onsemi**. "Typical" parameters which may be provided in **onsemi** data sheets and/or specifications can and do vary in different applications and actual performance may vary over time. All operating parameters, including "Typicals" must be validated for each customer application by customer's technical experts. **onsemi** does not convey any license under any of its intellectual property rights nor the rights of others. **onsemi** products are not designed, intended, or authorized for use as a critical component in life support systems or any FDA Class 3 medical devices or medical devices with a same or similar classification in a foreign jurisdiction or any devices intended for implantation in the human body. Should Buyer purchase or use **onsemi** products for any such unintended or unauthorized application, Buyer shall indemnify and hold **onsemi** and its officers, employees, subsidiaries, affiliates, and distributors harmless against all claims, costs, damages, and expenses, and reasonable attorney fees arising out of, directly or indirectly, any claim of personal injury or death associated with such unintended or unauthorized use, even if such claim alleges that **onsemi** was negligent regarding the design or manufacture of the part. **onsemi** is an Equal Opportunity/Affirmative Action Employer. This literature is subject to all applicable copyright laws and is not for resale in any manner.

ADDITIONAL INFORMATION

TECHNICAL PUBLICATIONS:
Technical Library: www.onsemi.com/design/resources/technical−documentation
onsemi Website: www.onsemi.com

ONLINE SUPPORT: www.onsemi.com/support
For additional information, please contact your local Sales Representative at
www.onsemi.com/support/sales