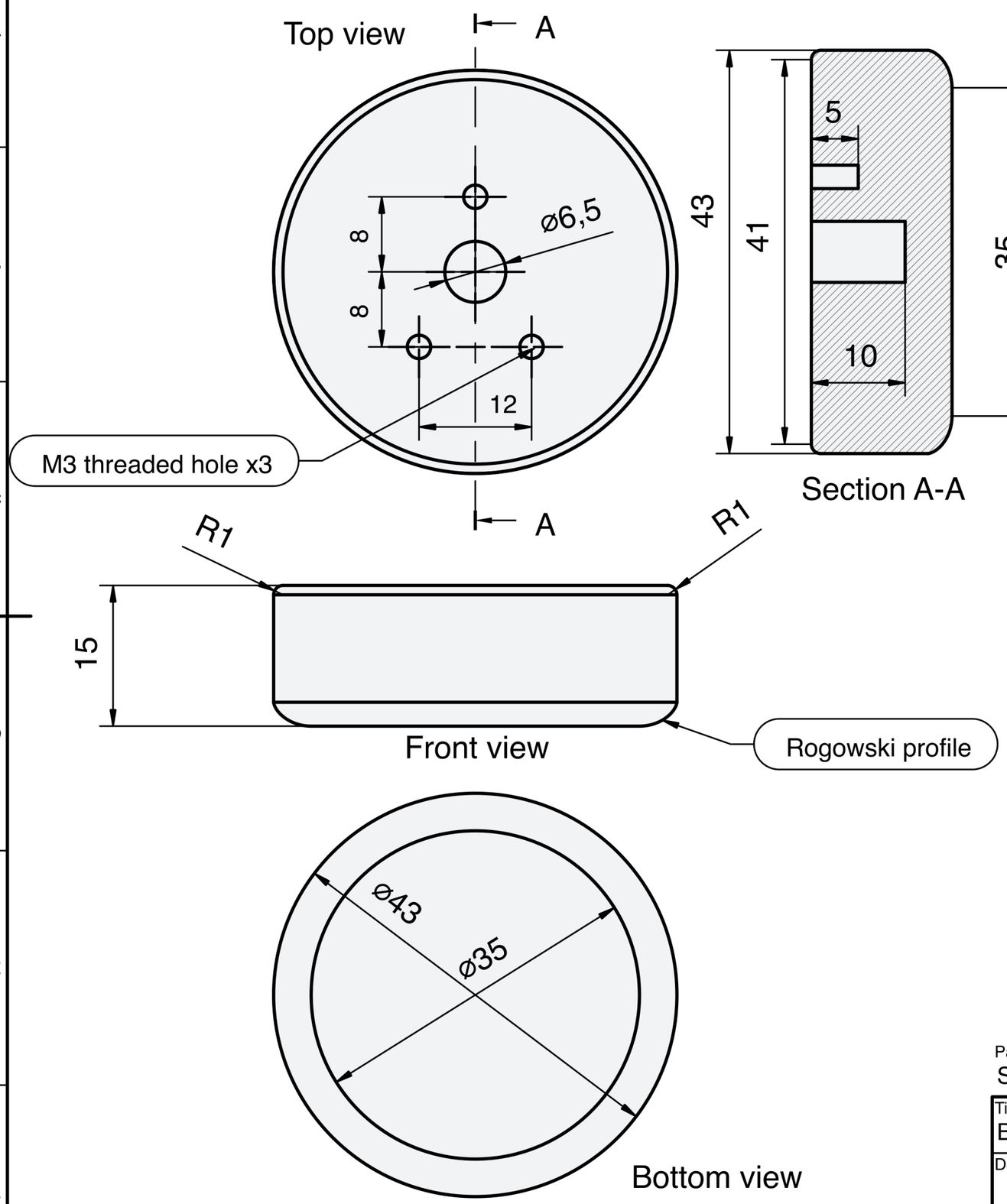

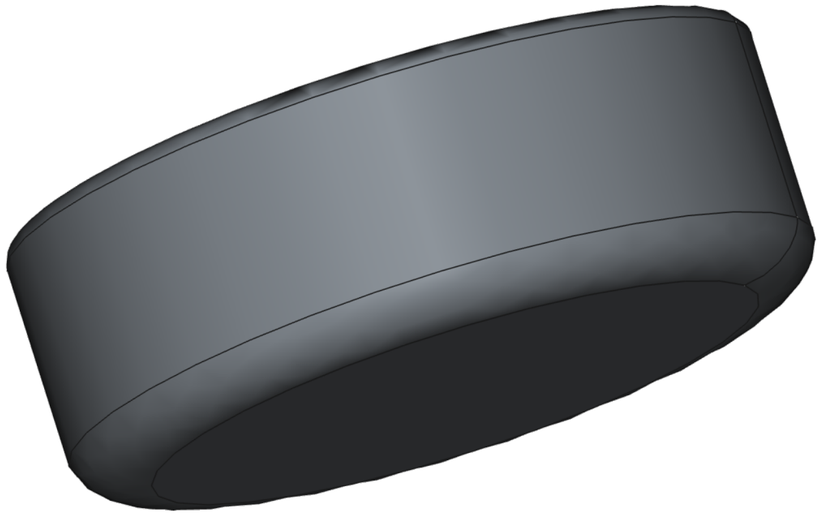

Electrode with flat part of 35 diameter

Rogowski profile from .step file

Straight section and top diameter part determined by Rogowski profile

M3 holes have all the same depth

Part Material: Stainless steel	General tolerances: ISO 2768-m	Scale: 2 : 1		
Title: Bottom electrode 35 mm	Created by: L. Quaglia		Owner:	
Document type:	Approved by:			
Drawing number:	Language: EN	Issue date: 17/06/26	Revision: AAA	Sheet: 1 / 2

A3

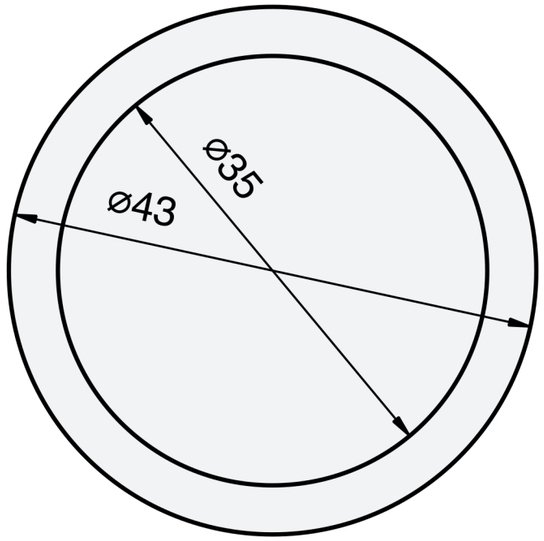

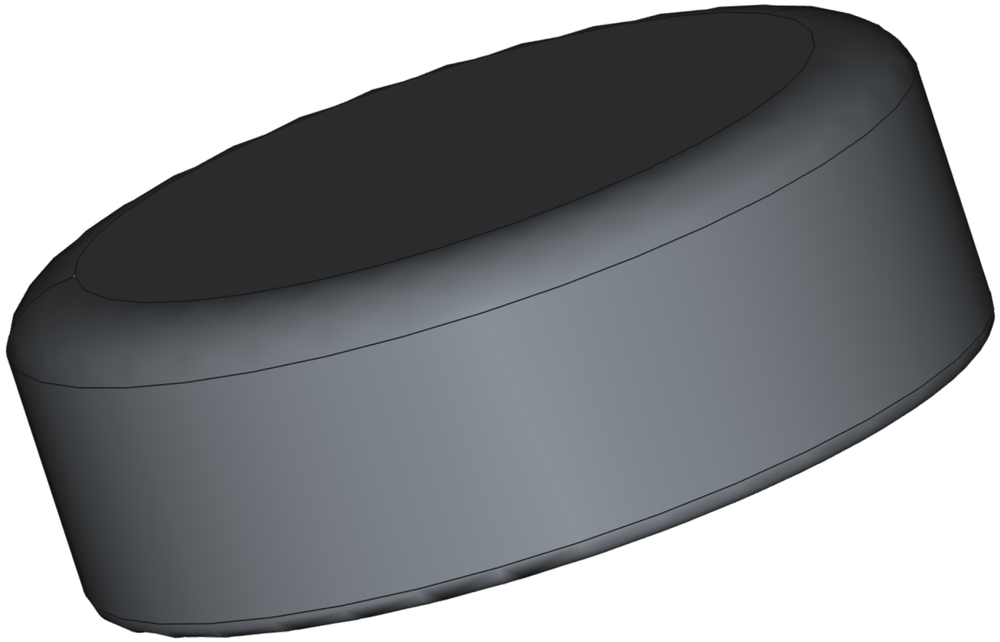

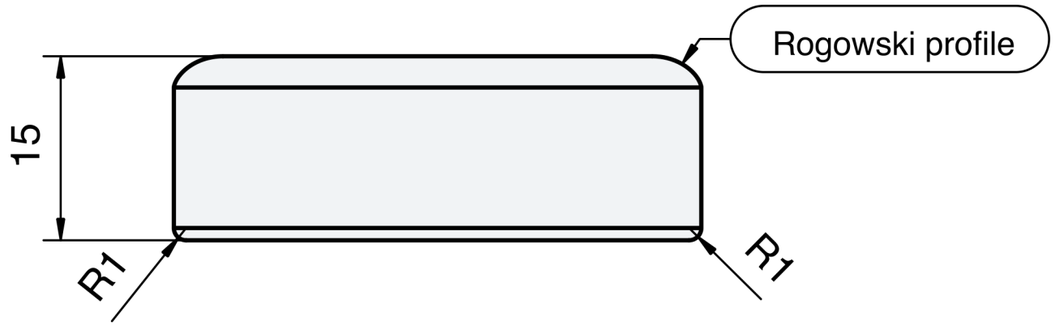

Electrode with flat part of 35 diameter

Rogowski profile from .step file

Straight section and top diameter part determined by Rogowski profile

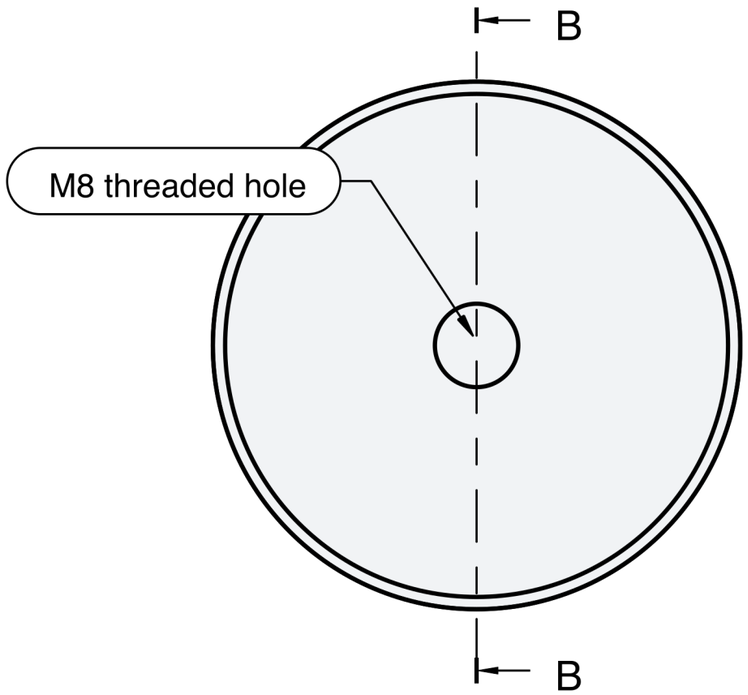

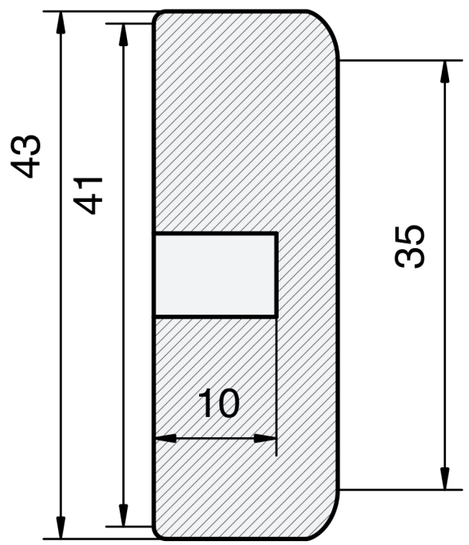

Sectiuon B-B

Part Material: Stainless steel	General tolerances: ISO 2768-m	Scale: 2 : 1		
Title: Top electrode 35mm	Created by: L. Quaglia		Owner:	
Document type: Component Drawing	Approved by:			
Drawing number:	Language:	Issue date: 17/06/26	Revision: AAA	Sheet: 2 / 2

A3