3.2 Starting the engine

Make sure that the following prerequisites are met:
- ❑ Oil level is OK.
- ❑ Coolant is filled.
- ❑ Charge air is connected.
- ❑ Exhaust gas disposal is ensured.
- ❑ The electrical power supply is ready.
- ❑ Fuel supply is connected.

WARNING
Unexpected movement of the equipment!
Can cause serious injuries or the death of persons.

- ▶ Make sure that no one is in the safety zones of the engine.
- ▶ Move all protective devices into protective position (enclosure, if present, is closed).
- ▶ Secure external parts against unexpected movements. Remove all persons from the danger zones.

Information
Engine damage due to insufficient lubrication!

- ▶ The oil pressure must build up immediately after starting the engine (oil pressure warning light goes out).

Information

Low load duration

Kohler Diesel engines have been approved for running at low loads. Operating the engine at low loads for extended periods of time can increase deposits/carbon buildup (Intensified at low ambient temperature).

This can be detrimental to the longevity and compliance of the engine.

If your operating profile has a prolonged low load duration, it is necessary to contact your genset supplier to take the necessary precautions.

If all of the safety instructions in the “Safety” chapter have been taken into account:
- ▶ Switch on the electrical power supply (battery voltage).

Final check

After successful engine start, perform the following checks and, if necessary, refill operating fluids.

- ▶ Check the oil level.
- ▶ Check the coolant level.
- ▶ Perform a visual check for any leaks in the lines.
- ▶ Check for KODIA error messages.
- ▶ Check for generator sets' error messages.

© 2022 by Kohler Co. All rights reserved.

4 Operating faults

See Faults - Cause - Remedy table for engine problems and corrective measures. (For more information see: 4.1 Errors – Cause – Remedy, page 36.)

Information

- ▶ Engine errors are shown on the diagnosis and service tool as an error code for diagnostic purposes.
- ▶ The electronic control unit has an error memory. Error entries are stored in the error memory. The remedy for the errors is described in the device documentation.

The following are available for error identification:
- Warning lights in the device display
- Diagnostics software

4.1 Errors – Cause – Remedy

Malfunction / error	Cause	Remedy
Starter motor does not turn.	Main fuse is blown.	Replace the fuse.
	Battery connections are loose or corroded.	Clean and tighten the loose connections.
	Battery voltage is too low.	Charge or replace the battery.
	Starter circuit is defective or the contacts are corroded.	Contact your nearest authorized Kohler service representative. See "Service Assistance" section.
	Starter is defective.	Contact your nearest authorized Kohler service representative. See "Service Assistance" section.
Starter motor turns slowly.	Battery voltage is too low.	Charge or replace the battery.
	Battery connections are loose or corroded.	Clean and tighten the loose connections.
	Outside temperature is too low.	Take appropriate action for Winter operation.

© 2022 by Kohler Co. All rights reserved.

Malfunction / error	Cause	Remedy
Engine will not start and/or stops again immediately.	Fuel tank is empty.	Refuel and vent the fuel system.
	Main fuel filter is clogged.	Replace the fuel filter.
	Fuel line, pre-cleaner or sieve in fuel tank is clogged.	Clean and vent the fuel system.
	Fuel system or filter is leaking.	Seal and ventilate.
	Outside temperature is too low.	Take appropriate action for winter operation.
Engine is difficult to start.	There is a leak in the low-pressure circuit or the pressure is too low.	Carry out a leak test (visual inspection). Contact your nearest authorized Kohler service representative to have the engine checked. See "Service Assistance” section.
	Compression of the engine is too low.	Contact your nearest authorized Kohler service representative. See "Service Assistance” section.
	Fault in the electronics.	Read out the error memory of the engine control unit. Contact your nearest authorized Kohler service representative. See "Service Assistance” section.
Engine suddenly switches off.	Voltage supply was interrupted.	Contact your nearest authorized Kohler service representative. See "Service Assistance” section.
	There is a leak in the low-pressure circuit or the pressure is too low.	Carry out a leak test (visual inspection). Contact your nearest authorized Kohler service representative to have the engine checked. See "Service Assistance” section.
	Fault in the electronics.	Read out the error memory of the engine control unit. Contact your nearest authorized Kohler service representative. See "Service Assistance” section.

© 2022 by Kohler Co. All rights reserved.

Malfunction / error	Cause	Remedy
Power of the engine is too low (lack of power).	There is a fault in the fuel system (blockage, leak).	Carry out a visual inspection for leaks, replace the filter. Contact your nearest authorized Kohler service representative. See "Service Assistance” section.
	Charging pressure is too low.	V-band clamps are loose, seals and hoses are defective, air filter is contaminated, exhaust gas turbo-charger defective. Contact your nearest Kohler customer service. See “Service” section.
	Charge air temperature is too high.	Charge air cooler is contaminated, fan power is reduced, ambient temperature is too high. Contact your nearest Kohler customer service. See “Service” section.
	Coolant temperature is too high.	Check the cooler for soiling, check the fan and thermostat, check the coolant level. Contact your nearest authorized Kohler service representative. See "Service Assistance” section.
	Fuel temperature is too high.	Contact your nearest authorized Kohler service representative. See "Service Assistance” section.
	Injectors are defective or do not vaporize.	Contact your nearest authorized Kohler service representative. See "Service Assistance” section.
	Compression of the engine is too low.	Contact your nearest authorized Kohler service representative. See "Service Assistance” section.
	Fault in the electronics.	Read the error logs of the engine control unit. Contact your nearest authorized Kohler service representative. See "Service Assistance” section.
Engine is too hot (according to coolant temperature display).	Coolant level is too low.	Fill up with coolant.
	Cooler is contaminated or calcified.	Clean or decalcify cooler. Contact your nearest Kohler customer service. See “Service” section.
	Thermostat has a fault.	Check this and replace if necessary. Contact your nearest authorized Kohler service representative. See "Service Assistance” section.

© 2022 by Kohler Co. All rights reserved.

Malfunction / error	Cause	Remedy
Charging current display illuminates when engine is running.	Tension of the V-ribbed belt is insufficient.	Check the tension of the V-ribbed belt and replace the tightening roller if necessary.
	V-ribbed belt is worn.	Replace the V-ribbed belt.
	Cable connections are loose or disconnected.	Fasten or replace the cable.
	Battery charging alternator, rectifier or regulator is defective.	Contact your nearest authorized Kohler service representative. See "Service Assistance" section.
Black smoke is coming out of the engine.	Injectors are defective or inefficient.	Contact your nearest authorized Kohler service representative. See "Service Assistance" section.
	Exhaust gas turbocharger has a fault (too low charging pressure).	Contact your nearest authorized Kohler service representative. See "Service Assistance" section.
	Engine is overloaded.	Contact your nearest authorized Kohler service representative. See "Service Assistance" section.
Exhaust gases are blue.	Oil level in engine is too high.	Check and correct the oil level.
	Lubricant enters the combustion chamber and is burnt.	Contact your nearest authorized Kohler service representative. See "Service Assistance" section.
	Bearing seal on exhaust gas turbocharger is defective.	Contact your nearest authorized Kohler service representative. See "Service Assistance" section.
	Ventilation of the crankcase is defective.	Check this and replace if necessary.
Exhaust gases are white.	Injection starts too late.	Contact your nearest authorized Kohler service representative. See "Service Assistance" section.
	Operating temperature is not reached.	Run the engine until it reaches its operating temperature.
	Water in the fuel system.	Check the fuel system and the drain pre-filter.
	Charge air cooler has a leak.	Contact your nearest authorized Kohler service representative. See "Service Assistance" section.

© 2022 by Kohler Co. All rights reserved.

Malfunction / error	Cause	Remedy
Engine knocks.	Fault during combustion.	Contact your nearest authorized Kohler service representative. See "Service Assistance" section.
	Error in valve clearance.	Adjust the valve clearance.
	Injectors are damaged or carbon-ized.	Contact your nearest authorized Kohler service representative. See "Service Assistance" section.
	Bearing damages.	Contact your nearest authorized Kohler service representative. See "Service Assistance" section.
	Piston rings are worn or defective, pistons are eroded.	Contact your nearest authorized Kohler service representative. See "Service Assistance" section.
Abnormal noises.	Intake lines and exhaust pipes are leaking, causing a whistling noise.	Seal the leaks and replace the gaskets if necessary.
	Turbine or compressor wheel is rubbing on the housing; foreign objects have entered into the compressor or turbine; bearings may have seized.	Contact your nearest authorized Kohler service representative. See "Service Assistance" section.
Engine oil pressure is too low.	Oil level in oil pan is too low.	Fill oil to prescribed mark.
	Lubricating oil is too thin (oil diluted by diesel fuel).	Drain the oil and refill with the specified oil.
	Pressure sensor has a fault.	Check the oil pressure and replace the damaged pressure transducer. Contact your nearest authorized Kohler service representative. See "Service Assistance" section.
	Pressure control valve does not work correctly or is contaminated.	Contact your nearest authorized Kohler service representative. See "Service Assistance" section.
Engine oil is in the cooling system.	Oil cooler or oil cooler plate is leaking.	Contact your nearest authorized Kohler service representative. See "Service Assistance" section.
Coolant is in the engine oil.	Cylinder gaskets are leaking.	Contact your nearest authorized Kohler service representative. See "Service Assistance" section.
	Oil cooler or oil cooler plate is leaking.	Contact your nearest authorized Kohler service representative. See "Service Assistance" section.
Charge air temperature is too high.	Charge air cooler is contaminated.	Contact your nearest authorized Kohler service representative. See "Service Assistance" section.
	Air inlet temperature is too high.	Check the fan, air supply and breather.

© 2022 by Kohler Co. All rights reserved.

Malfunction / error	Cause	Remedy
Charge air pressure is too low.	Air filter is clogged.	Check the air filter's service display, if equipped.
	Charge air cooler is contaminated.	Contact your nearest authorized Kohler service representative. See "Service Assistance" section.
	Exhaust gas turbocharger outlet is defective.	Contact your nearest authorized Kohler service representative. See "Service Assistance" section.

© 2022 by Kohler Co. All rights reserved.

5.5 2000 - Lubrication system

5.5.1 Checking the oil level – SLO-2011

Make sure that the following prerequisites are met:
- ❑ The engine is horizontal.
- ❑ The engine is turned off

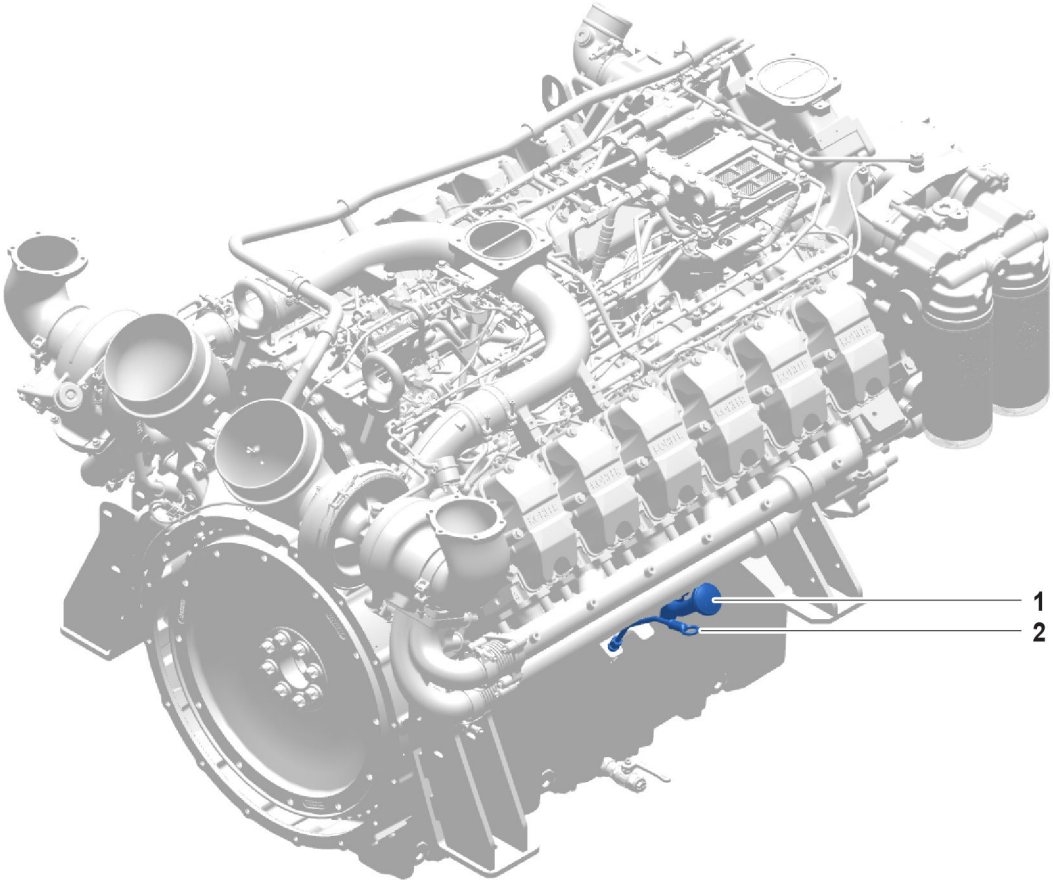

Fig. 44: Checking the oil level

1 Oil filler neck

2 Oil dipstick

▶ Pull out oil dipstick **2**, wipe with a clean cloth and reinsert to limit stop.

© 2022 by Kohler Co. All rights reserved.

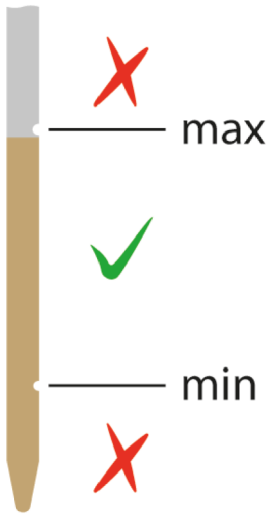

Fig. 45: Oil level

- ▶ Remove oil dipstick **2** again and check oil level. The oil level must be between “min” and “max”.

If the oil level is below the “min” mark:

- ▶ Refill lubricating oil.
- ▶ Remove oil filler cap and refill oil.
- ▶ Fill oil through oil filler neck **1**.
- ▶ Do not fill engine with oil above the “max” mark.
- ▶ Clean filler cap, place on filler neck and tighten.

5.5.2 Changing the lubricating oil – SL1-2020

Make sure that the following prerequisites are met:

- ❑ The engine is horizontal.
- ❑ The engine is turned off
- ❑ The engine is warm, unlike in the maintenance position.
- ❑ Strap wrench or similar tool is on hand.
- ❑ A collection container with the required capacity is available.
- ❑ Oil filters with seals are available.
- ❑ Lubricating oil is available. For lubricating oil quantity, see “Fill quantities table” chapter. For lubricating oil specification, see “Lubricants and operating fluids” chapter.

© 2022 by Kohler Co. All rights reserved.

5.5.4 Replacing the oil filter – SL1-2110

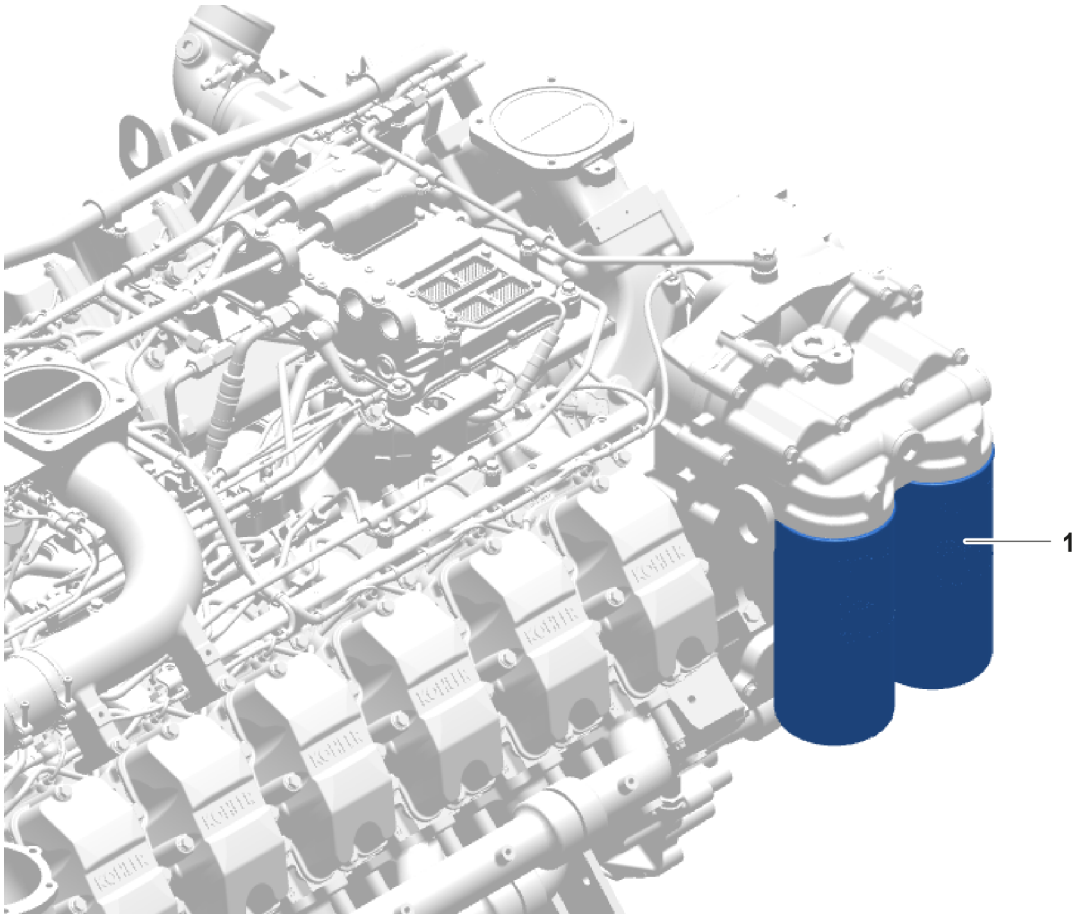

Fig. 49: Replacing the oil filter

1 Oil filter

▶ Release oil filter **1** with a strap wrench or similar tool and unscrew it.

WARNING
Hot engine oil!
Risk of burns! Can cause injuries.

▶ Avoid skin contact with the engine oil.

▶ Wear protective gloves when changing the engine oil.

▶ Dispose of oil filter (observe country-specific regulations).

▶ Coat seal on oil filter **1** with lubricating oil.

▶ Screw in new oil filter **1** until sealing ring rests against oil module.

© 2022 by Kohler Co. All rights reserved.

Tightening instruction for oil filter (hexagon socket wrench size 17 mm)		
Lubricant	Lubricating oil	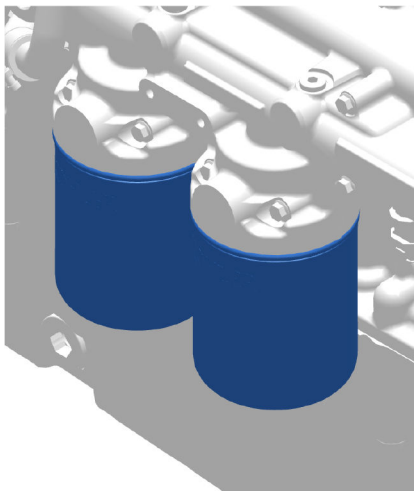
Threadlock	-	
Component contact surfaces	-	
Screws	-	
Stage	**Tightening torque**	
1.	Screw in by hand until seal is in place	
2.	1/2 turn (25 $^{\pm 5}$ Nm)	

Tab. 42: Tightening instruction

▶ Tighten oil filter **1** according to tightening instruction.

© 2022 by Kohler Co. All rights reserved.

5.6 3000 - Cooling system

5.6.1 Checking the coolant level – SL0-3011

WARNING
Hot cooler parts and hot coolant!
Serious burns possible.

- ▶ Let engine cool down to below 50 °C before all work.
- ▶ Wear protective gloves and safety goggles.

Fig. 51: Hot cooler parts

- ▶ For procedure to check the coolant level, see documentation for the generator set.

If the coolant level is too low or too high:
- ▶ Do not start engine.
- ▶ Refill coolant, see documentation for the generator set.

5.6.2 Replacing the coolant – SL1-3020

- ▶ Replace coolant, see documentation for the generator set.

5.6.3 Taking a coolant sample and performing a coolant analysis – SL1-3021

Make sure that the following prerequisite is met:
- ❑ A collection container for coolant sample is available.

WARNING
Hot cooler parts and hot coolant!
Serious burns possible.

- ▶ Let engine cool down to below 50 °C before all work.
- ▶ Wear protective gloves and safety goggles.

© 2022 by Kohler Co. All rights reserved.

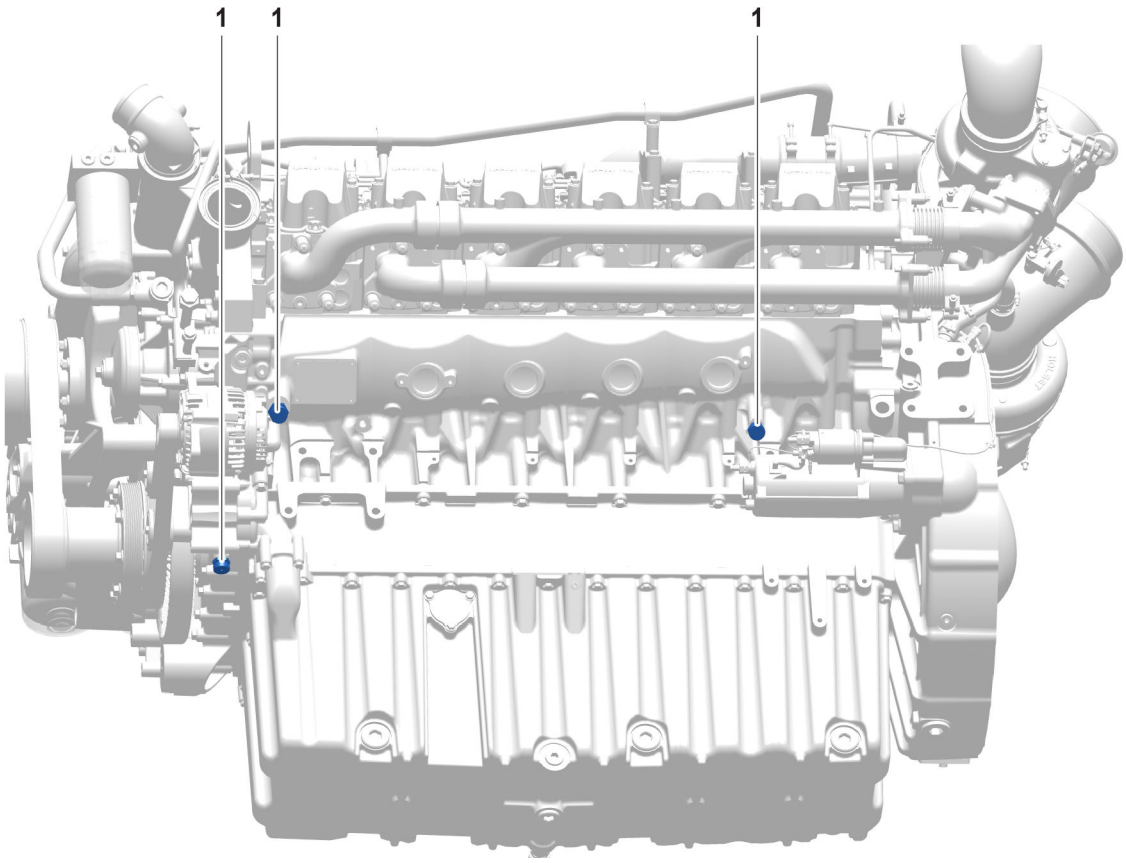

Fig. 52: Coolant sampling point

© 2022 by Kohler Co. All rights reserved.

WARNING
Open flames!
Injuries, fire and explosion! Can cause severe injury or death.

- ▶ Avoid open flames or other ignition sources when performing maintenance or inspection work on the fuel system.
- ▶ Perform maintenance and inspection work only when the engine has been turned off.

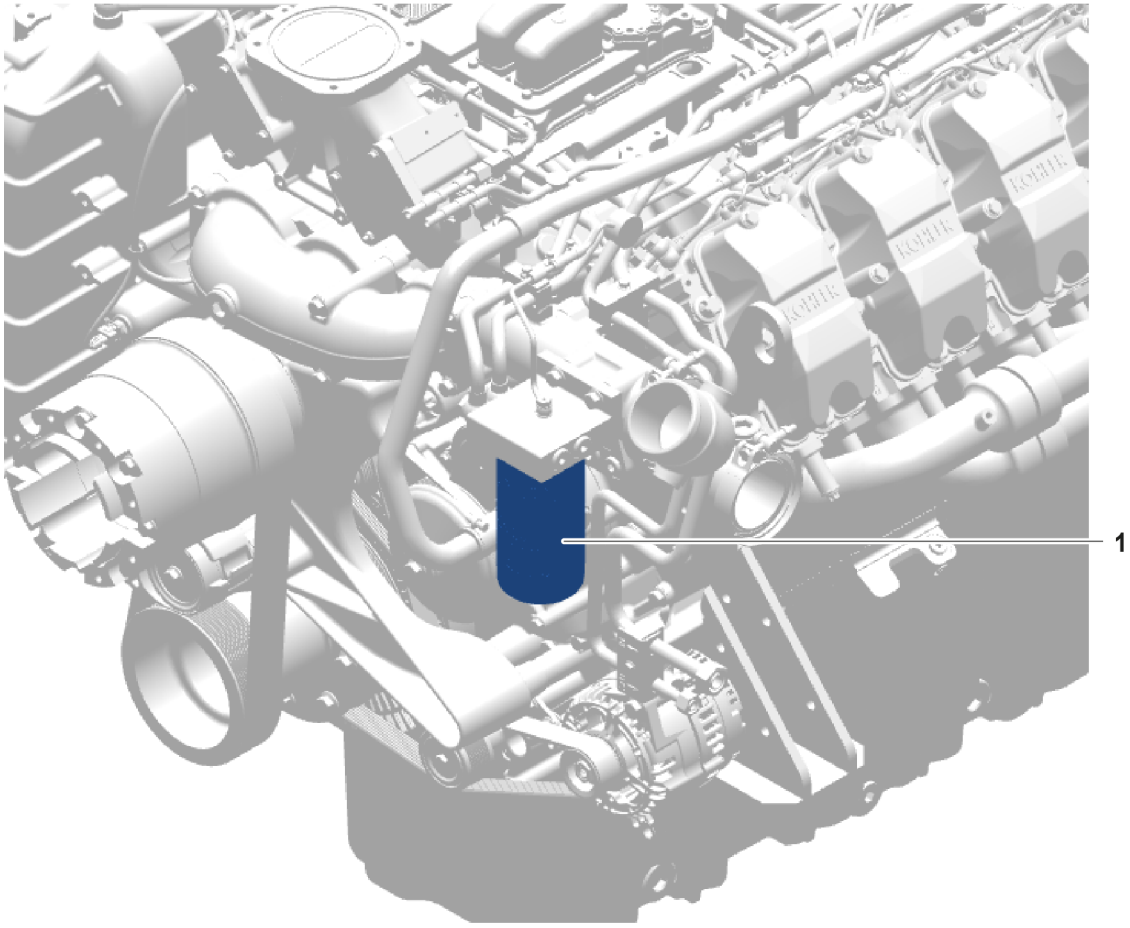

Fig. 57: Replacing the main fuel filter

1 Main fuel filter

- ▶ Place collection container under main fuel filter.
- ▶ Clean the main fuel filter and surrounding area carefully.
- ▶ Loosen the main fuel filter **1** with a strap wrench or similar tool and unscrew.
- ▶ Dispose of used main fuel filter (observe country-specific regulations).
- ▶ Check that the filter module is clean and make sure that the thread adapter fits firmly in the filter module.

If the filter module is dirty:

- ▶ Clean filter module.

© 2022 by Kohler Co. All rights reserved.

Information
Dirt!
Destruction of the common rail system.

- ▶ Make sure that no dirt enters the clean side of the filter.
- ▶ Leave residual diesel fuel in the filter housing.
- ▶ Never reuse a main fuel filter after it has been used once.
- ▶ Pay attention to the special instructions for working on the common rail system, see “Safety instructions” chapter.

- ▶ Coat sealing ring on main fuel filter with lubricating oil.
- ▶ Screw in new main fuel filter until sealing ring rests against filter module.

Tightening instruction for main fuel filter		
Lubricant	-	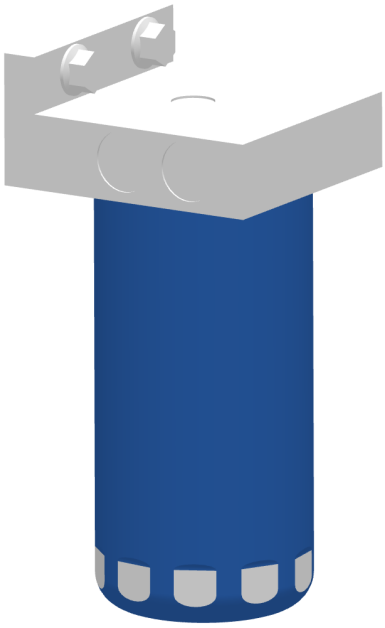
Threadlock	-	
Component contact surfaces	Lubricating oil	
Screws	-	
Stage	**Tightening torque**	
1.	Screw in by hand until seal is in place	
2.	3/4 turn (22.5 Nm)	

Tab. 43: Tightening instruction

- ▶ Tighten main fuel filter **1** according to tightening instruction.
- ▶ Vent fuel system.

© 2022 by Kohler Co. All rights reserved.