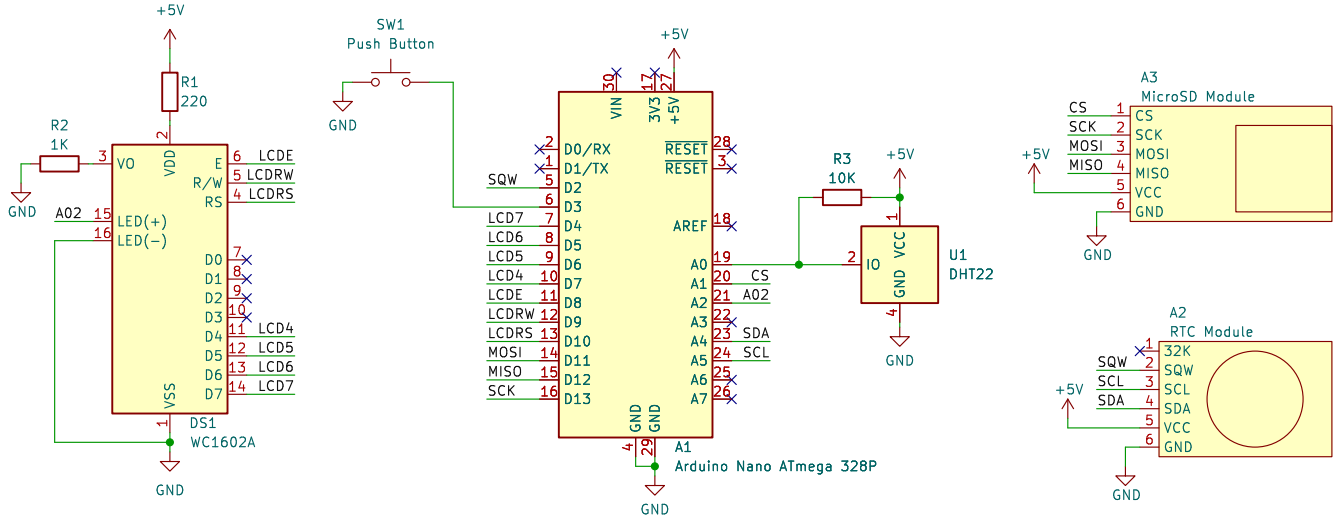

Author/s: Lucas J. Mina, Dario D. Larrea y Miryam P. Damborsky

Sheet: /
File: arduino_datalogger.kicad_sch

Title: Arduino based datalogger prototipe

Size: A5	Date: 2023-12-18	**Rev: 0.1**
KiCad E.D.A. eeschema 7.0.9-1.fc39		Id: 1/1