HALF ADDER

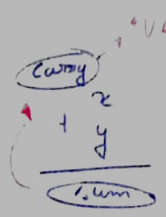

x	y	sum	carry
1	1	0	1
1	0	1	0
0	1	1	0
0	0	0	0

x XOR y -> sum

x AND y -> carry

Full ADDER

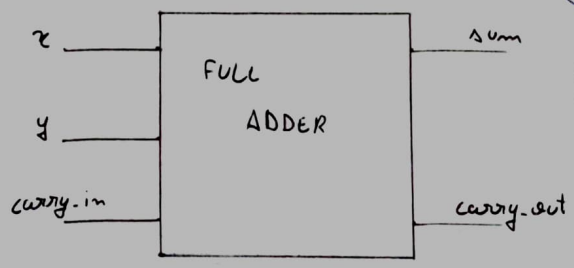

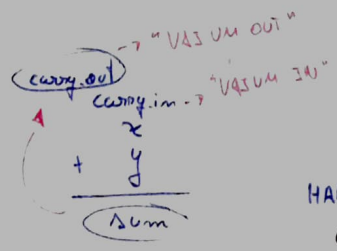

HALF_ADDER(carry_in, x)
↳ sum: SOMA 1
↳ carry: carry 1

HALF_ADDER(SOMA 1, y)
↳ sum: sum (SOMA FINAL)
↳ carry: carry 2

carry 1 OR carry 2
↳ carry final

ADD 16

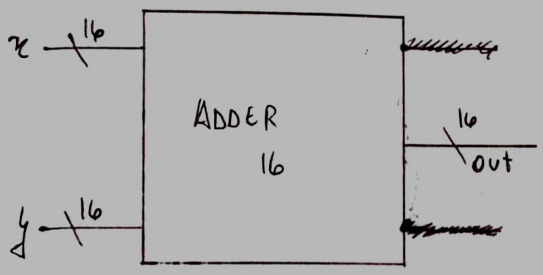

FULLADDER(a[0], b[0], false)

FULLADDER(a[i], b[i], c[j])

i indo de 1 a 15

j sendo carry da soma anterior.
0 a 14

Incrementador 16

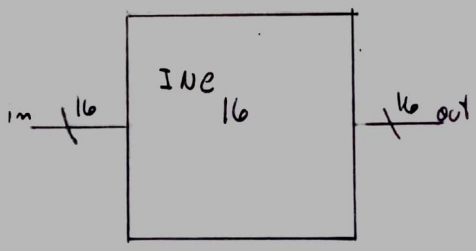

in + 1 -> out

ADD 16 (in, b[0] = true)
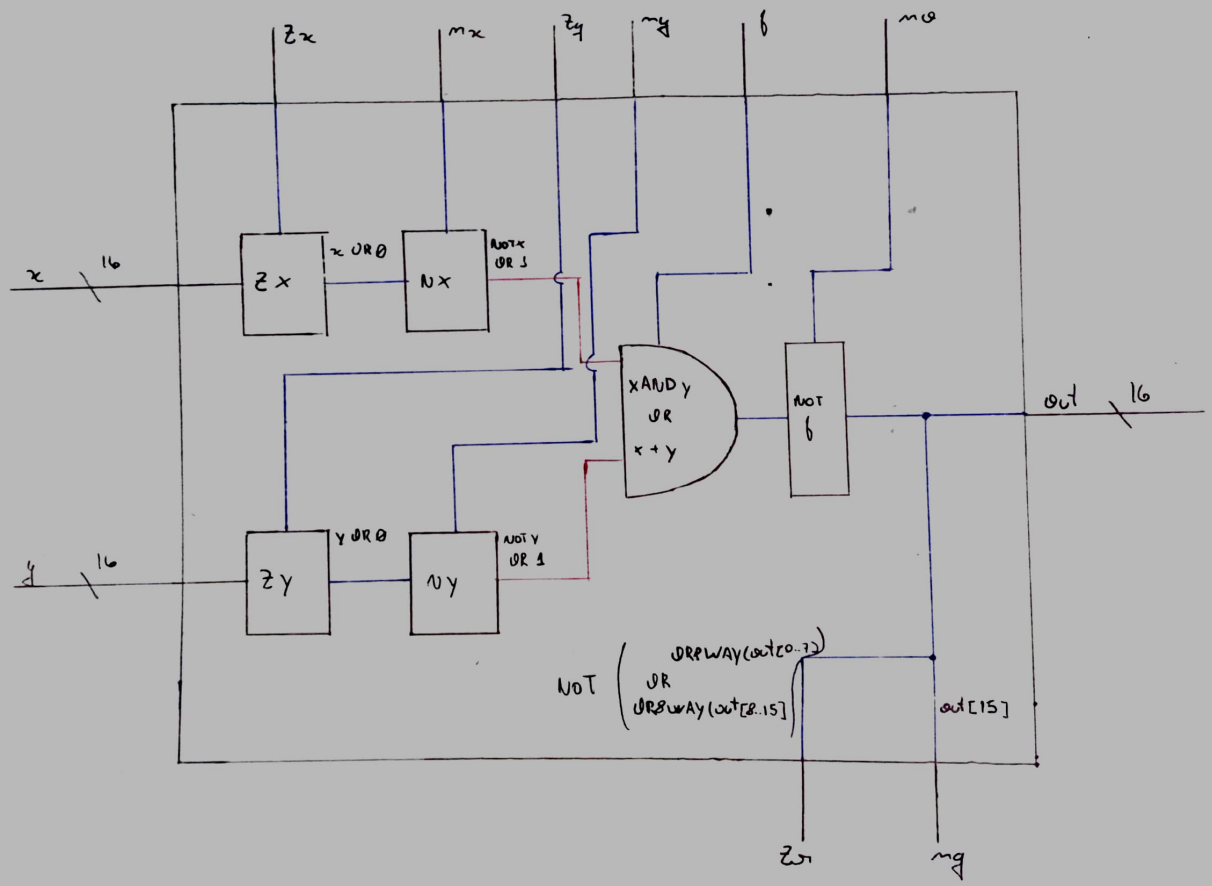
Unidade Lógica Aritmética (ULA)