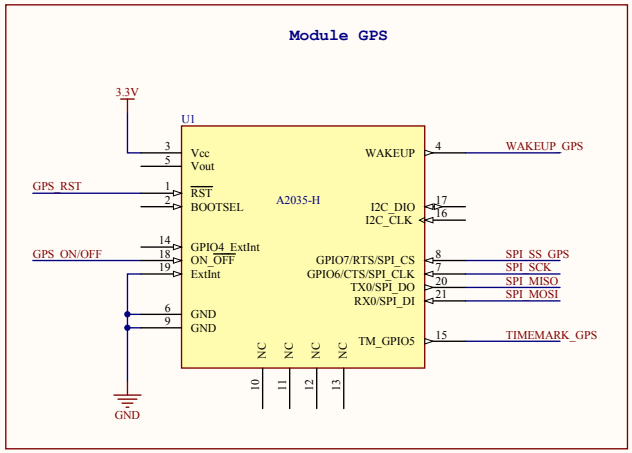

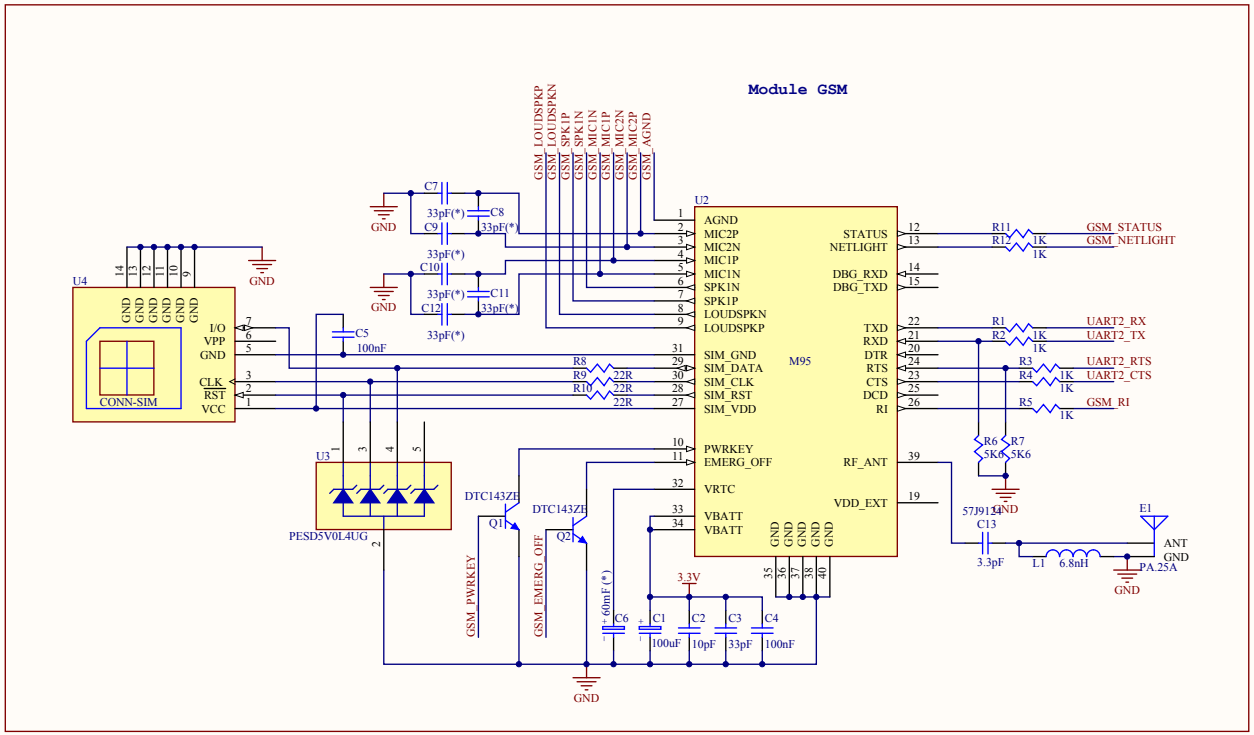

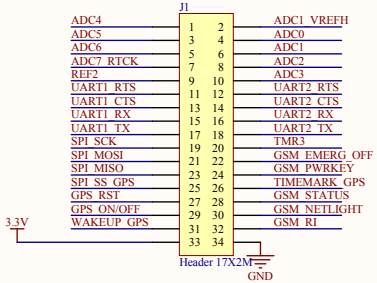

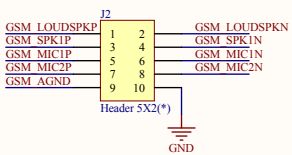

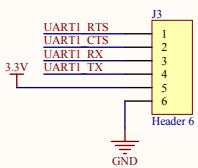

(*) = NOT MOUNTED

Title		
Size A3	Number	Revision
Date: 06-02-2014	Sheet of	
File: T:\SVN_LISHA\..\emote2-gsm_gps-schematics.sch	Drawn By:	