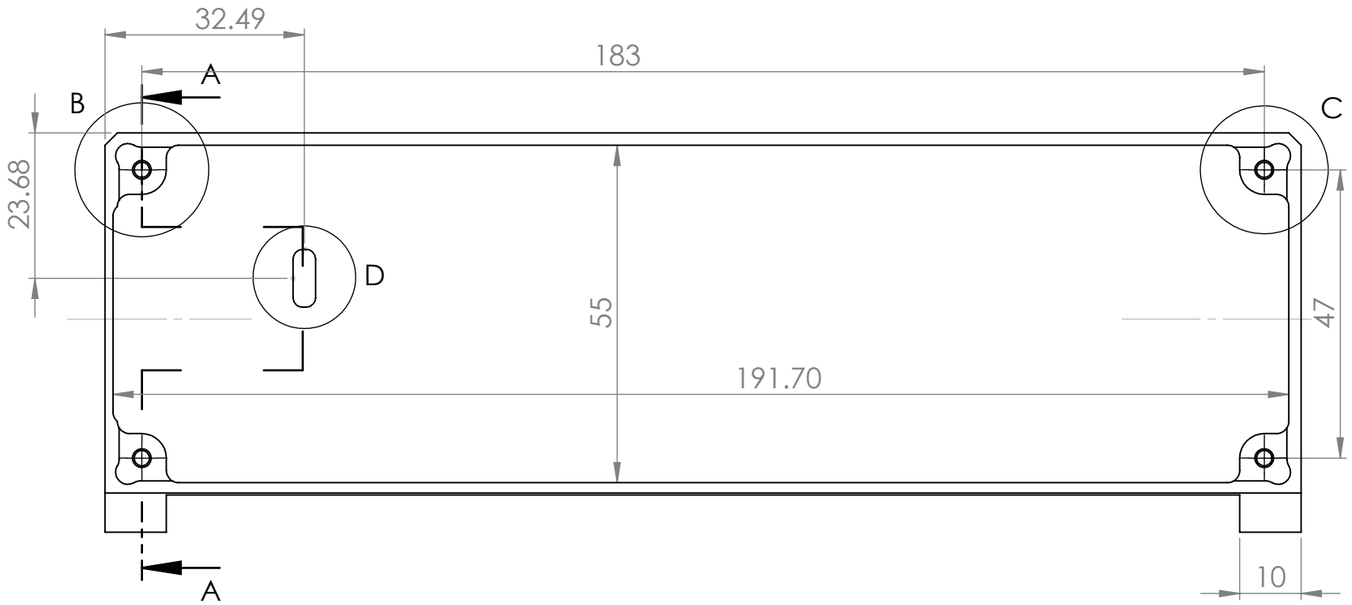

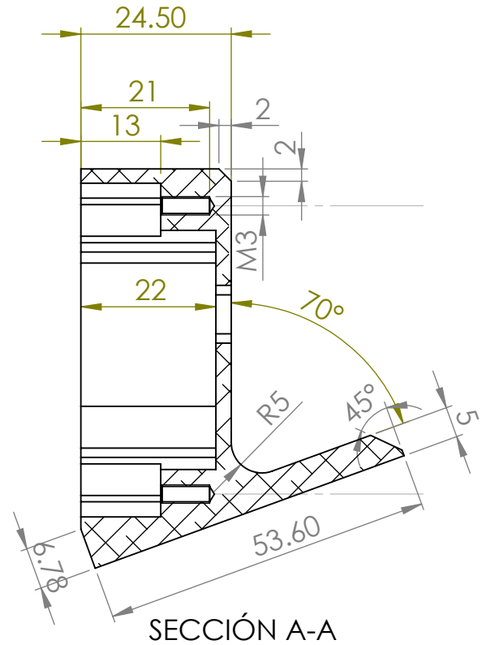

SECCIÓN A-A

DETALLE B
ESCALA 2 : 1

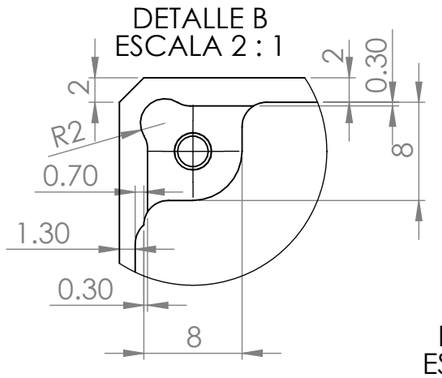

DETALLE C
ESCALA 2 : 1

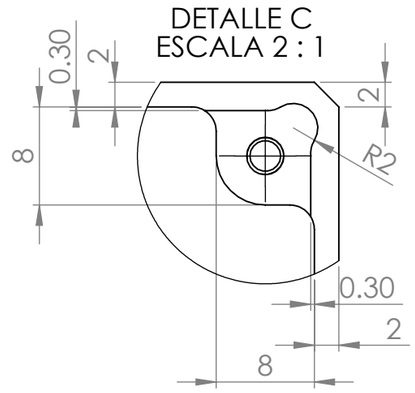

DETALLE D
ESCALA 2 : 1

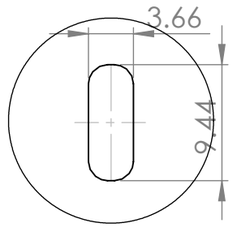

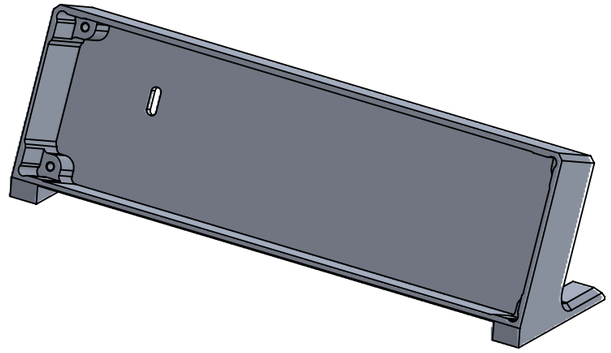

UNLESS OTHERWISE SPECIFIED: DIMENSIONS ARE IN MILLIMETERS SURFACE FINISH: TOLERANCES: LINEAR: ANGULAR:		FINISH:			DEBURR AND BREAK SHARP EDGES	DO NOT SCALE DRAWING / REVISION
						Mutech microsystems
	NAME	SIGNATURE	DATE			TITLE: VFD case back housing
DRAWN	Lucas Neñer					
CHK'D						
APPV'D						
MFG						
Q.A				MATERIAL: 6061 Aluminum		DWG NO. VFDBACK / A3
				WEIGHT:		SCALE:1:1 / SHEET 1 OF 1