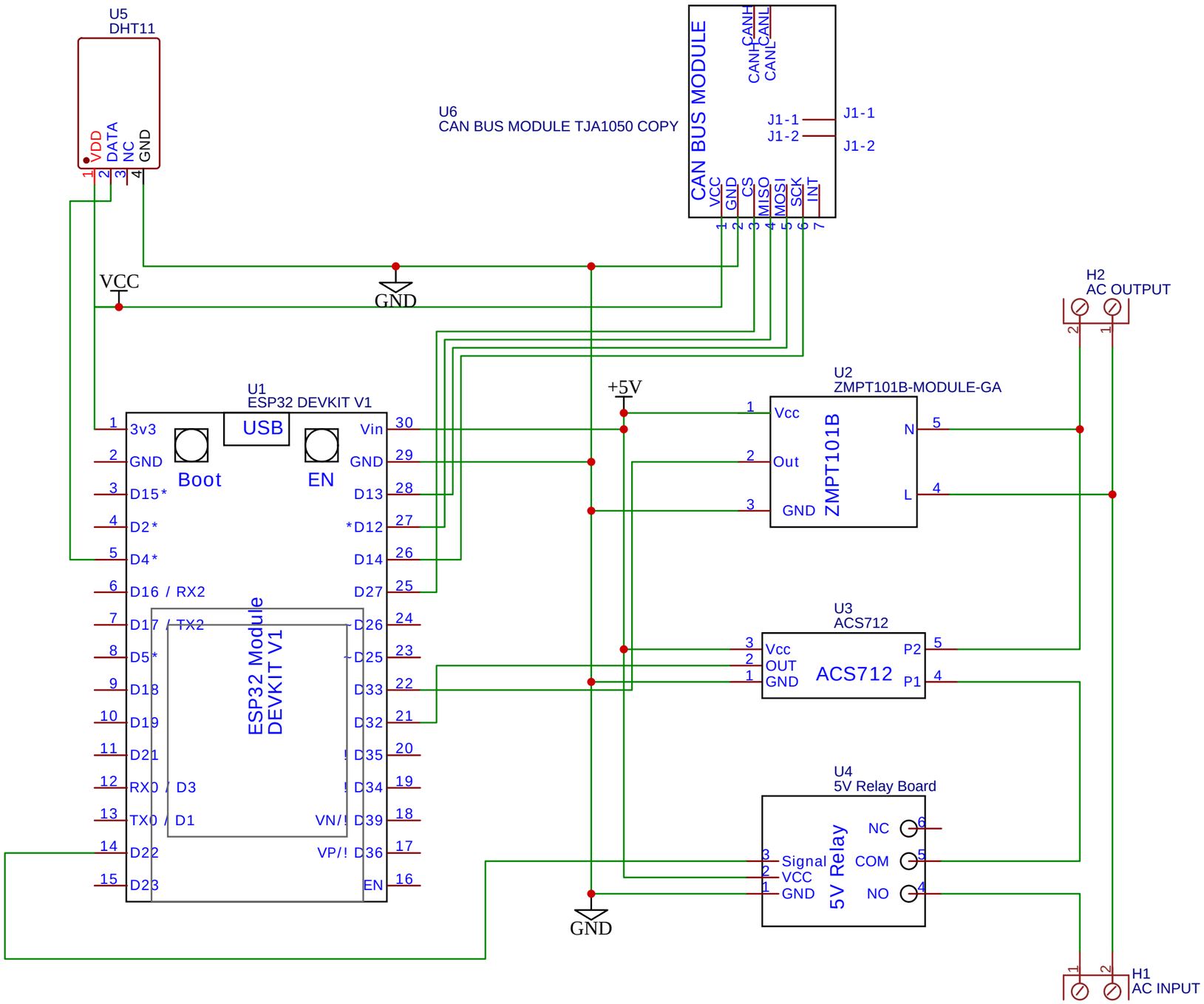

TITLE: SDAW PROJECT SCHEMATIC		REV: 1.0
EasyEDA	Company: Transilvania University-Brasov	Sheet: 1/1
	Date: 2021-12-04 Drawn By: Ardeleanu Lucian	