EA/EEA - PSF (exemple)

P1/E

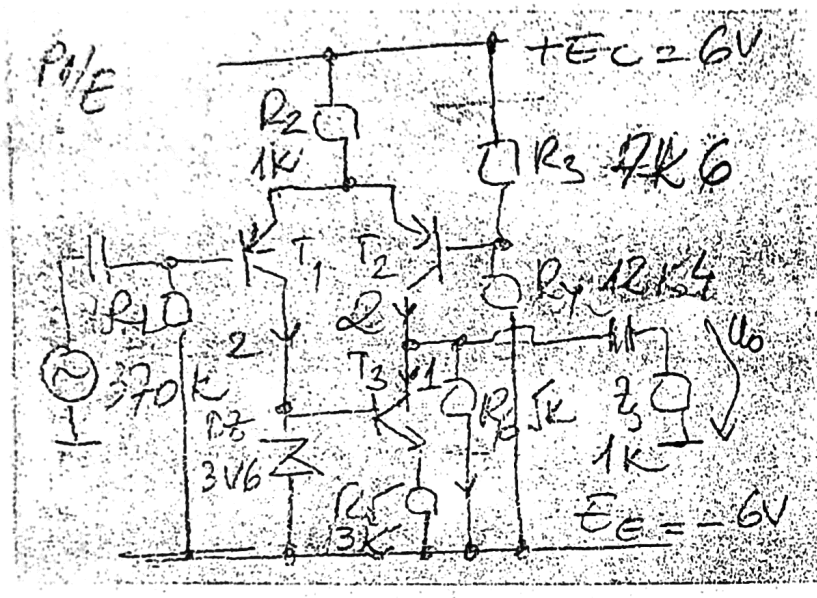

$U_{BE} = 0{,}6V$

$\beta_0 = 100$

	T_1	T_2	T_3
I_C	2	2	1 mA
U_{CE}	7,4	3V	2 V

P1/A

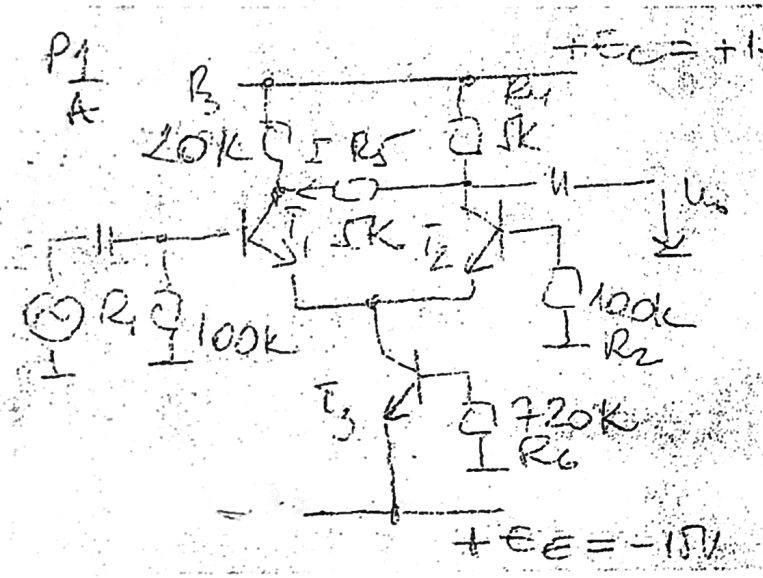

$\beta_0 = 100$

$U_{BE} = 0{,}6$

	T_1	T_2	T_3
I_C	1	1	2 mA
U_{CE}	6,6	9,1	13,4 V

P1/B

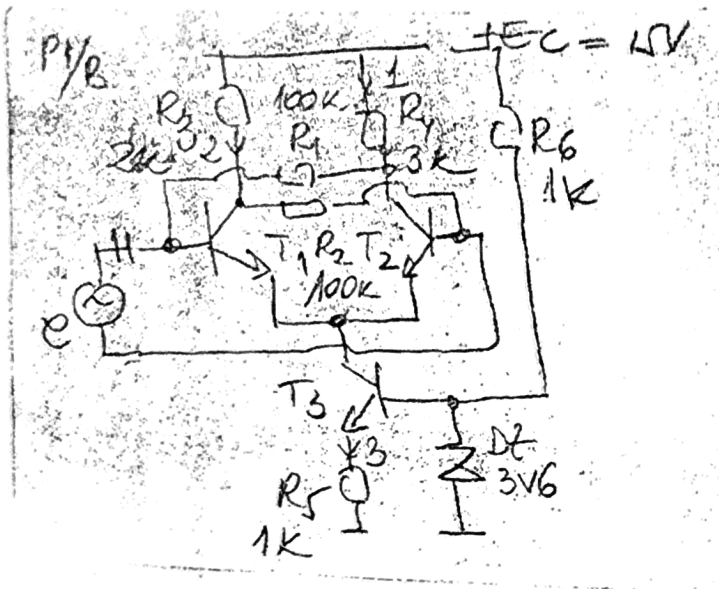

$U_{BE} = 0{,}6$

$\beta_0 = 100$

	T1	T2	T3	
I_C	2	1	3	mA
U_{CE}	1,6	2,6	6,4	V

P1/C

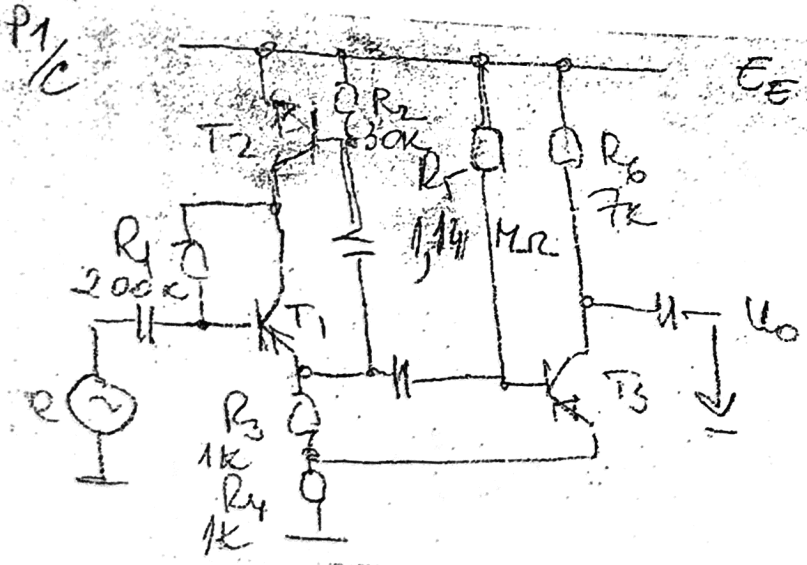

$E_E = -15V$

$U_{BE} = 0{,}6V$

$\beta_0 = 100$

	T1	T2	T3
I_C	2	2	1
U_{CE}	4,6	5,4	5V

P1/D

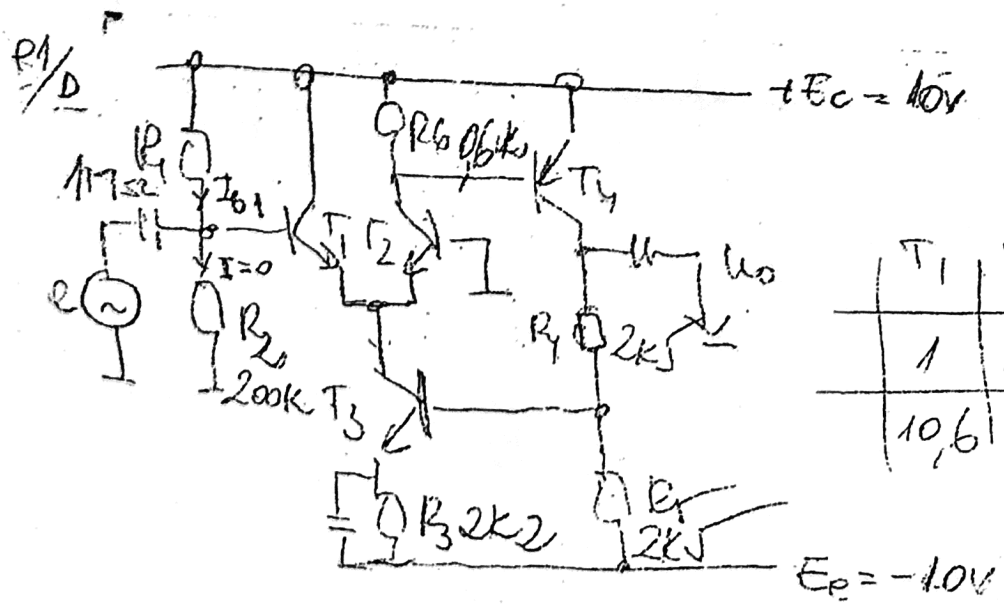

$U_{BE} = 0{,}6V$

$\beta_0 = 100$

T1	T2	T3	T4
1	1	2	2
10,6	10	2,8	10

P1/A

$$-E_E = U_{BE} + R_6 \frac{I_{C3}}{\beta_0}$$

$$15 = 0{,}6 + \frac{720}{100} I_{C3} \Rightarrow \boxed{I_{C3} = 2\,mA}$$

$$I_{C1} + I_{C2} = I_{C3}$$

$$R_1 \frac{I_{C1}}{\beta_0} + \cancel{U_{BE}} = \cancel{U_{BE}} + R_2 \frac{I_{C2}}{\beta_0}$$

$$\Rightarrow \boxed{I_{C1} = I_{C2} = 1\,mA}$$

$$-E_E = R_1 \frac{I_{C1}}{\beta_0} + U_{BE} + U_{CE3}$$

$$15 = 100 \cdot \frac{1}{100} + 0{,}6 + U_{CE3} \Rightarrow \boxed{U_{CE3} = 13{,}4\,V}$$

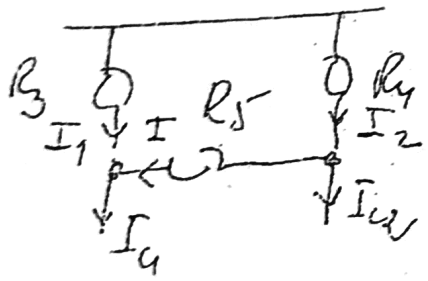

$$\begin{cases} I_{C1} = I_1 + I \\ I_{C2} = I_2 - I \\ R_3 I_1 = R_5 I + R_4 I_2 \end{cases}$$

$$\Rightarrow I = \frac{I_1 - I_2}{2}, \quad I_1 + I_2 = I_{C1} + I_{C2} = 2$$

$$\cancel{20}^{4} \cdot I_1 = -\cancel{8} \cdot \frac{I_1 - I_2}{2} + \cancel{8} I_2$$

$$-8I_1 + I_1 + I_2 + 2I_2 = 0$$

$$I_2 = 3I_1 \Rightarrow \boxed{I_1 = 0{,}5\,mA} \quad \boxed{I_2 = 1{,}5\,mA}$$

V $E_C - E_E = U_{CE_1} + U_{CE_3} + R_3 I_1$

$30 = 13{,}4 + U_{CE_1} + 20 \cdot 0{,}5$

$\boxed{U_{CE_1} = 6{,}6\,V}$

V $R_3 I_1 + U_{CE_1} = R_4 I_2 + U_{CE_2}$

$10 + 6{,}6 = 5 \cdot 1{,}5 + U_{CE_2}$

$\boxed{U_{CE_2} = 9{,}1\,V}$

Pb U_{CE}

$5 \cdot 1 = U_{CE_3} + 3 \cdot 1 \Rightarrow U_{CE_3} = \boxed{2V}$

$12 = 1(2+2) + U_{CE_1} + 3,6$ $\quad U_{CE_1} = 4,4$

$4,4 + 0,6 = 2 + U_{CE_2}$

$U_{CE_2} \longrightarrow \boxed{3V}$

$$R_3 I_{C1} + R_2 \frac{I_{C2}}{\beta_0} + \cancel{U_{BE}} = \cancel{U_{BE}} + R_1 \frac{I_{C1}}{\beta_0} + R_4 I_{C2} \quad \left(\frac{R_1}{B}\right)$$

$$I_{C1} + I_{C2} = I_{C3}$$

$$U_{DZ} = U_{BE} + R_5 I_{C3}$$

$$3{,}6 = 0{,}6 + 1 \cdot I_{C3} \Rightarrow \boxed{I_{C3} = 3\,mA}$$

$$2 I_{C1} + \frac{100}{100} I_{C2} = I_{C1} \frac{100}{100} + 3 I_{C2}$$

$$I_{C1} = 2 I_{C2} \Rightarrow \boxed{\begin{array}{l} I_{C2} = 1\,mA \\ I_{C1} = 2\,mA \end{array}}$$

$$E_C = R_3 I_{C1} + R_2 \frac{I_{C2}}{\beta_0} + U_{BE} + U_{CE3} + R_5 I_{C3}$$

$$15 = 2 \cdot 2 + \frac{100}{100} \cdot 1 + 0{,}6 + U_{CE3} + 1 \cdot 3$$

$$\boxed{U_{CE3} = 15 - 8{,}6 = 6{,}4\,V}$$

$$U_{CE1} = R_2 \frac{I_{C2}}{\beta_0} + U_{BE} = 1 + 0{,}6 = \boxed{1{,}6\,V}$$

$$U_{CE2} = R_1 \frac{I_{C1}}{B} + U_{BE} = \frac{100}{100} \cdot 2 + 0{,}6 = 2{,}6\,V$$

(P1/c)

La T_2 ✓ $U_{BE} = R_2 \frac{I_{C2}}{\beta_0}$

$$0{,}6 = \frac{30}{100} I_{C2} \Rightarrow \boxed{I_{C2} = 2mA}$$

✓ $\left(\cancel{\frac{1}{\beta_0}} + 1\right) I_4 = I_{C2} \Rightarrow \boxed{I_{C2} = 2mA}$

≈ 0

✓ $$-E_E = R_5 \frac{I_{C3}}{\beta_0} + U_{BE} + R_4 (I_4 + I_{C3})$$

$$15 = 0{,}6 + 1 \cdot 2 + I_{C3}\left(1 + \frac{R_5}{100}\right)$$

$$12{,}4 = I_{C3}\left(1 + \frac{1{,}4M\Omega}{100}\right) \Rightarrow \boxed{I_{C3} = 1mA}$$

✓ $$U_{CE_1} = U_{BE} + R_4 \frac{I_4}{\beta_0} = 0{,}6 + \frac{200}{100} \cdot 2 = \boxed{4{,}6V}$$

✓ $$-E_E = U_{CE_1} + U_{CE_2} + R_3 I_4 + R_4 (I_4 + I_3)$$

$$15 = 4{,}6 + U_{CE_2} + 2 + 3$$

$$U_{CE_2} = \boxed{5{,}4V}$$

✓ $$-E_E = R_4 (I_4 + I_{C3}) + U_{CE_3} + R_6 I_{C3} \Rightarrow U_{CE_3} = \boxed{5V}$$

P1/D

$$\frac{I_{C1}}{\beta} \cdot R_1 + \cancel{U_{BE}} - \cancel{U_{BE}} = E_C$$

$$I_{C1} = \frac{10 \cdot 100}{1000} = \underline{1\,mA}$$

$$I_{C2} R_6 = U_{BE}$$

$$I_{C2} \cdot 0{,}6k = 0{,}6 \Rightarrow \underline{I_{C2} = 1\,mA}$$

$$I_{C3} = I_{C1} + I_{C2} = \underline{2\,mA}$$

$$U_{BE} + R_3 (I_{C1} + I_{C2}) = R_5 I_{C4}$$

$$0{,}6 + 2 \cdot 2k2 = 2{,}5k\, I_{C4}$$

$$I_{C4} = \underline{2\,mA}$$

$$U_{CE_1} = R_1 \frac{I_{C1}}{\beta_0} + U_{BE} = 1000 \cdot \frac{1}{100} + 0{,}6 = \underline{10{,}6}$$

$$U_{CE_2} = U_{CE_1} - R_6 I_{C2} = 10{,}6 - 0{,}6 \cdot 1 = \underline{10\,V}$$

$$E_C - E_E = U_{CE_1} + U_{CE_3} + R_3 I_{C3}$$

$$20 = 10{,}6 + U_{CE_3} + 2{,}2 \cdot 3$$

$$U_{CE_3} = 20 - 17{,}2 = \underline{2{,}8\,V}$$

P1/E

1) $U_{D2} = U_{BE} + R_5 I_{C3}$

2) $E_C - E_E = R_2 (I_{C1} + I_{C2}) + U_{BE} + R_1 \frac{I_{C1}}{\beta_0}$

3) $R_1 \frac{I_{C1}}{\beta_0} + \cancel{U_{BE}} = \cancel{U_{BE}} + \underbrace{(R_3 \| R_4)}_{R_e} \frac{I_{C2}}{\beta_0} - \underbrace{E_E \frac{R_4}{R_3 + R_4}}_{E_e}$

Theremin

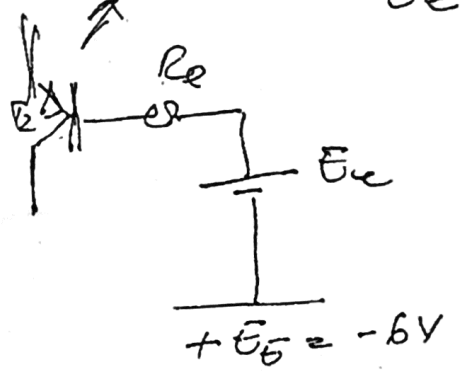

$\Rightarrow \boxed{I_{R_6} = I_{C2} - I_{C3}}$

$R_6 I_{R_6} = U_{CE_3} + R_5 I_{C3}$

$U_{CE_1} + U_{BE} = U_{CE_2} + U_{CE_3}$

$E_C - E_E = R_2 (I_{C1} + I_{C2}) + U_{BE_1} + U_{D2}$

Calcule (1) $3{,}6 = 0{,}6 + 3 I_{C3} \Rightarrow \boxed{I_{C3} = 1\,mA}$

$R_e < 7K6 \rightarrow$ Neglijez I_{B2} in (3)

$370 \cdot \frac{I_{C1}}{100} = 12 \cdot \frac{12{,}4}{20}$

$I_{C1} = \frac{12{,}4 \cdot 12 \cdot 5}{370} = 2{,}01 = \boxed{2\,mA}$

2) $12 = (2 + I_{C2}) + 0{,}6 + \frac{370}{100} \cdot 2 \Rightarrow \boxed{I_{C2} = 2\,mA}$

EA / ECA (examen) 1/4

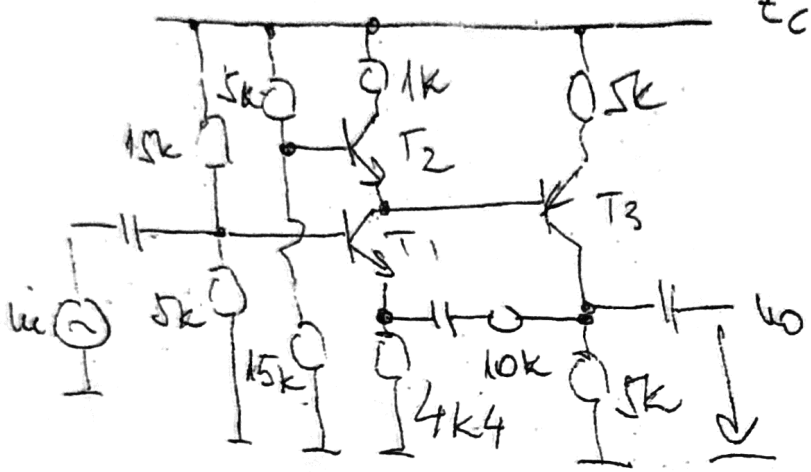

$U_{BE} = 0{,}6V$

$\beta_0 = 100$

	T_1	T_2	T_3
I_C	1	1	1
U_{CE}	10	14,6	10

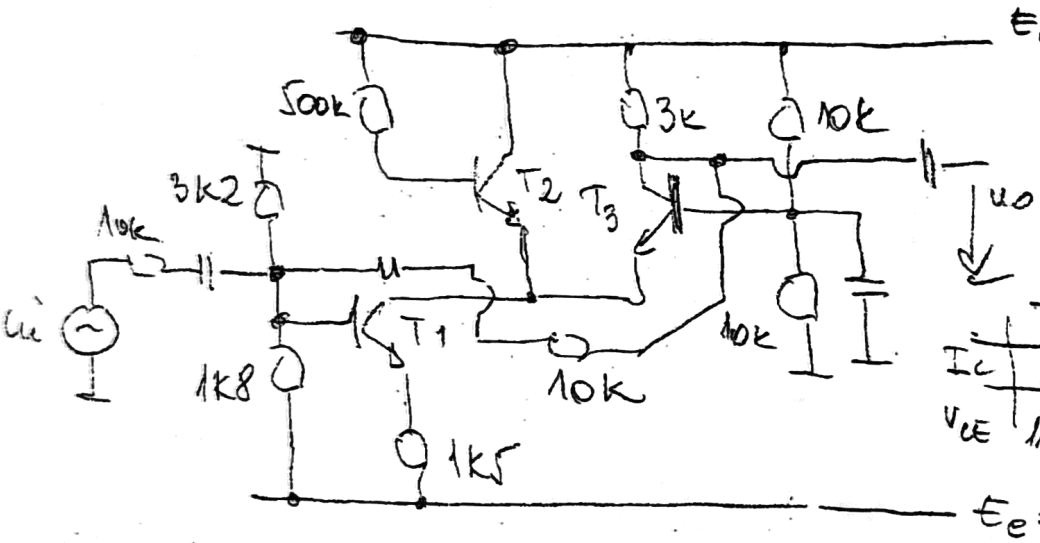

$U_{BE} = 0{,}6$

$\beta_0 = 100$

	T1	T2	T
I_C	2	1	1
V_{CE}	11,4	5,6	2

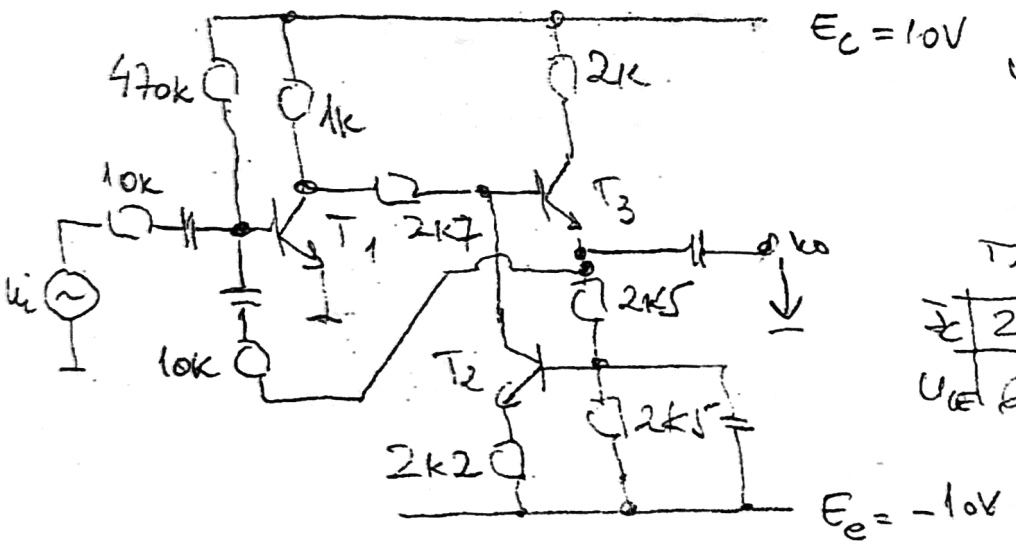

$U_{BE} = 0{,}6$ L

$\beta_0 = 100$

	T_1	T_2	T_3
I_C	2	2	2 m
U_{CE}	6	6,2	6

~~EK~~ / ~~EEA~~

$U_{BE} = 0{,}6V$
$\beta_0 = 100$

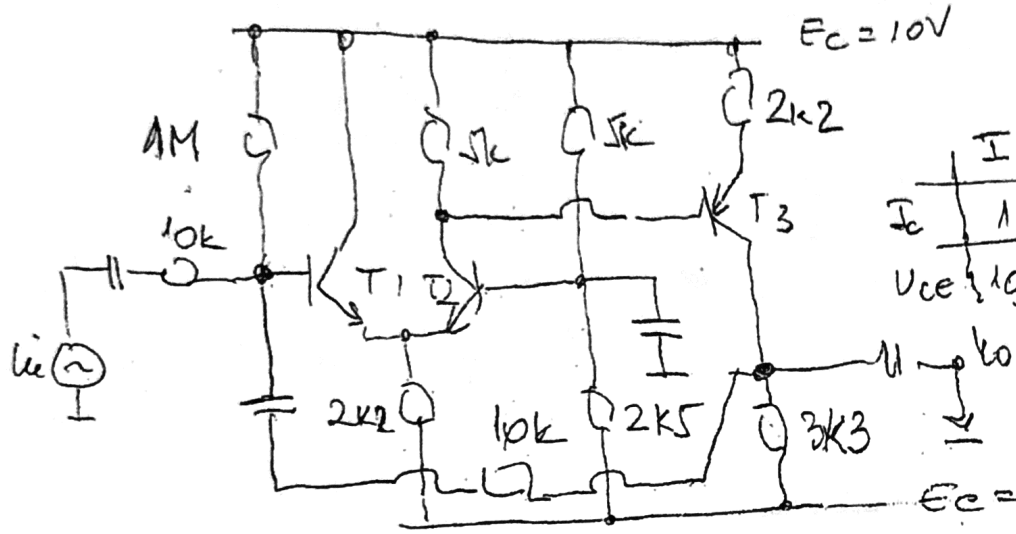

	T_1	T_2	T_3
I_C	1	1	2 mA
U_{CE}	10,6	5,6	4

$E_C = 15V$ $U_{BE} = 0{,}6V$
$\beta_0 = 100$

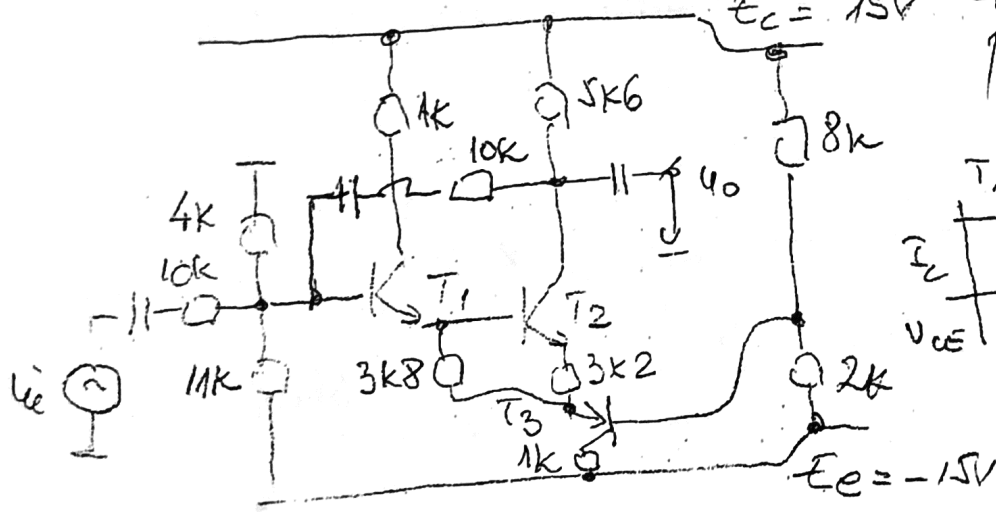

	T_1	T_2	T_3
I_C	1	1	2 mA
U_{CE}	18,6	14,6	4,6

$+E_C = 12V$ $U_{BE} = 0{,}6$
$\beta_0 = 100$

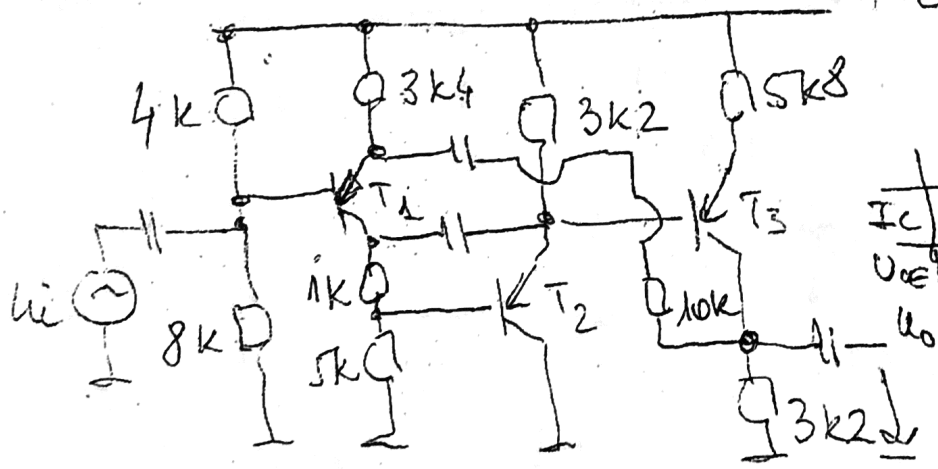

	T_1	T_2	T_3
I_C	1	2	1 mA
U_{CE}	2,6	5,6	3

EA/EEA

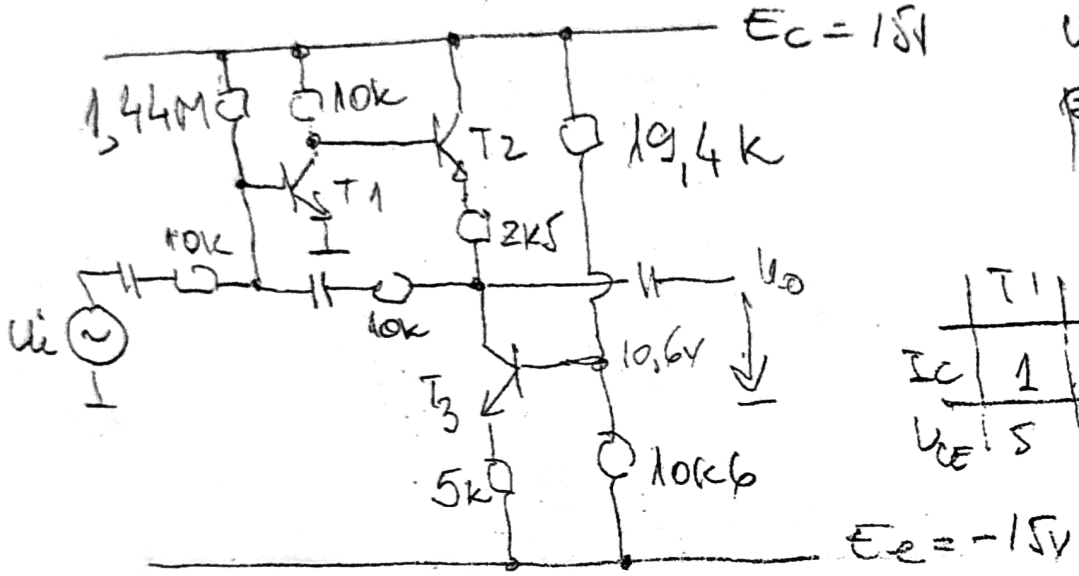

$U_{BE} = 0{,}6V$
$\beta_0 = 100$

	T1	T2	T3
I_C	1	2	2
U_{CE}	5	10,6	4,4

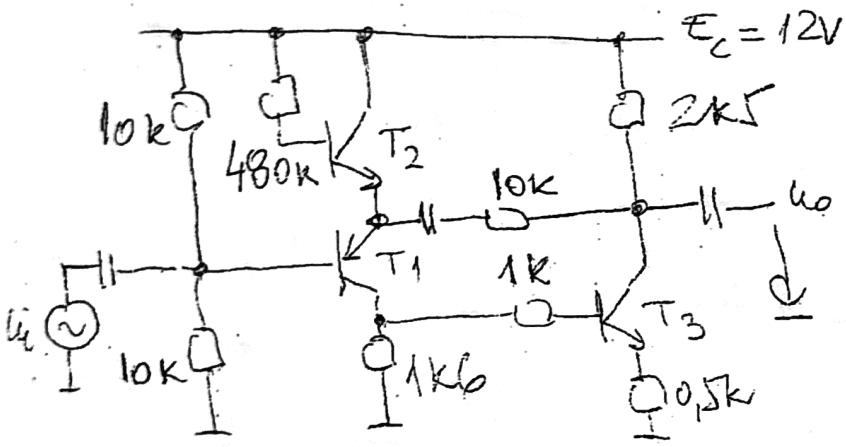

$U_{BE} = 0{,}6V$
$\beta_0 = 100$

	T1	T2	T3
I_C	1	1	2 mA
U_{CE}	5	5,4	6

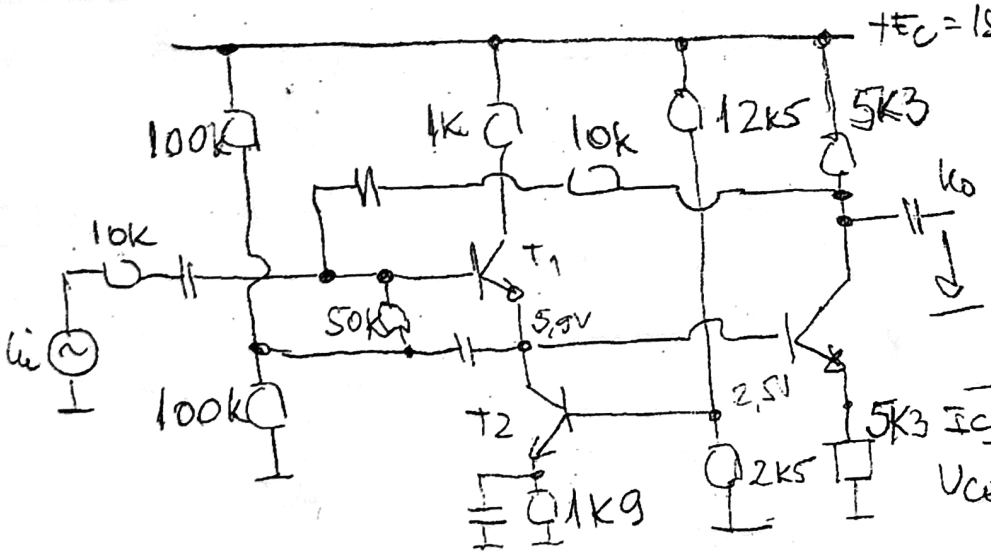

$U_{BE} = 0{,}6$
$\beta_0 = 10$

	T1	T2	T3
I_C	1	1	1
U_{CE}	8,1	4	4,1

EA / EEA

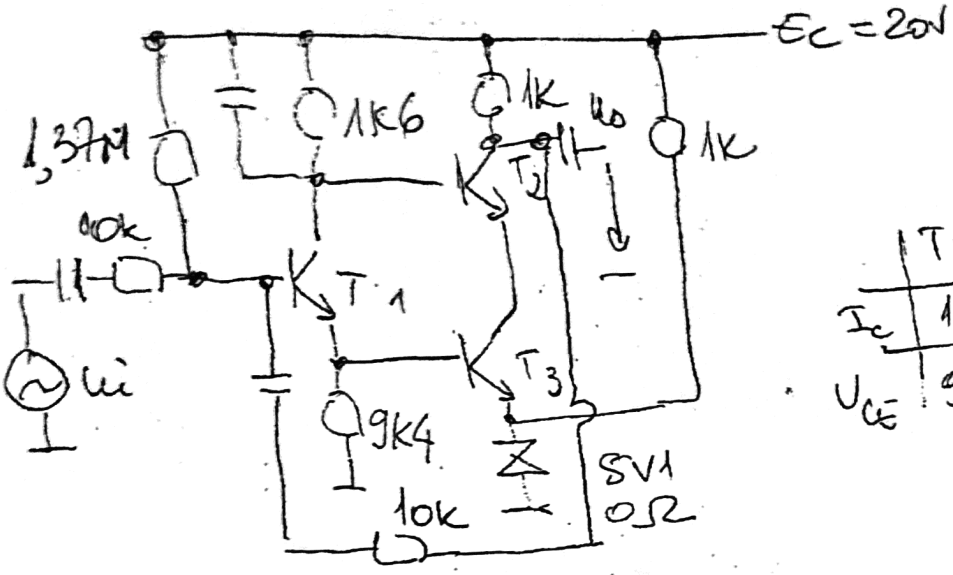

$U_{BE} = 0{,}6V$
$\beta_0 = 100$

	T1	T2	T3
I_C	1	1	1 mA
U_{CE}	9	4	9V

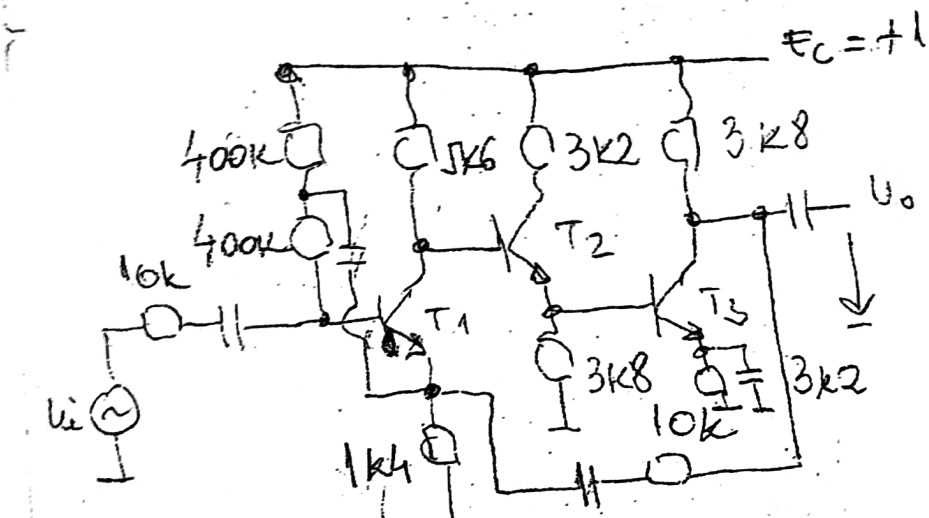

$U_{BE} = 0{,}6V$
$\beta_0 = 100$

	T1	T2	T3
I_C	1	1	1 mA
U_{CE}	3	3	3

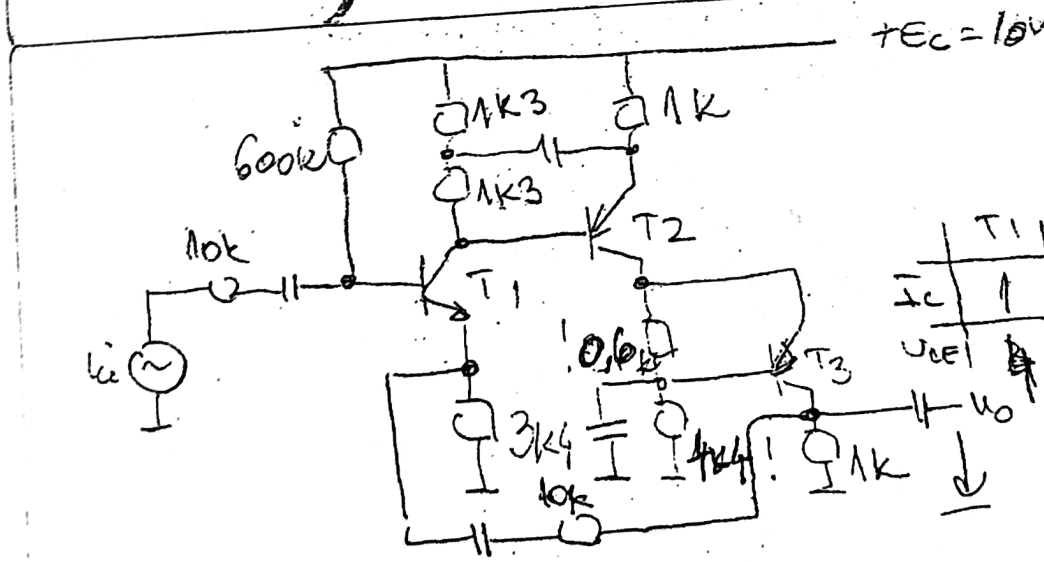

$U_{BE} = 0{,}6V$
$\beta_0 = 100$

	T1	T2	T3
I_C	1	2	1 mA
U_{CE}	4	3	4