IWIT

MT6225 GSM/GPRS Baseband Processor Data Sheet

聯發機密不得洩漏

MTK CONFIDENTIAL

Revision 1.02

Dec 17, 2006

NO DISCLOSURE

IWIT

MTK Confidential A (機密)

Revision History

Revision	Date	Comments
1.00	Oct 24, 2006	First Release
1.01	Dec 14, 2006	Correct GPIO 47-50 list in section 2.4 pin description
1.02	Dec 17, 2006	Correct some values in section 2.4 pin description (JTDO, JRTCK, MCCM0, MCDA0~3, MCCK, MCWP, MCINS, CMDAT7~0, CMPCLK, CMMCLK, AU_OUT0_P) Correct some values in chapter 13 digital pin characteristics (DAIPCMIN, MCWP, MCINS)

IWIT
聯發機密不得洩漏
MTK CONFIDENTIAL
NO DISCLOSURE
IWIT

MTK Confidential A (機密)

TABLE OF CONTENTS

Revision History 2

Preface 5

1. System Overview 6
- 1.1 Platform Feature 9
- 1.2 MODEM Features 11
- 1.3 Multi-Media Features 12
- 1.4 General Description 13

2 Product Description 15
- 2.1 Pin Outs 15
- 2.2 Top Marking Definition 18
- 2.3 DC Characteristics 19
- 2.4 Pin Description 20
- 2.5 Ordering information 29

3 Micro-Controller Unit Subsystem 30
- 3.1 Processor Core 31
- 3.2 Memory Management 31
- 3.3 Bus System 35
- 3.4 Direct Memory Access 38
- 3.5 Interrupt Controller 54
- 3.6 Code Cache controller 67
- 3.7 MPU 75
- 3.8 Internal Memory Interface 83
- 3.9 External Memory Interface 84

4 Microcontroller Peripherals 93
- 4.1 Security Engine 93
- 4.2 OTP Controller (OTPC) 95
- 4.3 Pulse-Width Modulation Outputs 98
- 4.4 Alerter 100
- 4.5 SIM Interface 103
- 4.6 Keypad Scanner 111
- 4.7 General Purpose Inputs/Outputs 113
- 4.8 General Purpose Timer 125
- 4.9 UART 128
- 4.10 IrDA Framer 142
- 4.11 Real Time Clock 149
- 4.12 Auxiliary ADC Unit 155
- 4.13 I2C / SCCB Controller 157

5 Microcontroller Coprocessors 167
- 5.1 Divider 167
- 5.2 CSD Accelerator 169
- 5.3 FCS Codec 179

6 Multi-Media Subsystem 182
- 6.1 LCD Interface 182
- 6.2 Image Resizer 198
- 6.3 NAND FLASH interface 208
- 6.4 USB Device Controller 223
- 6.5 Memory Stick and SD Memory Card Controller 232

IWIT
研發機密不得洩漏
MTK CONFIDENTIAL
NO DISCLOSURE
IWIT

MTK Confidential A (機密)

6.6 Graphic Memory Controller 255
6.7 Camera Interface 257

7 Audio Front-End 268
7.1 General Description 268
7.2 Register Definitions 271
7.3 Programming Guide 275

8 Radio Interface Control 277
8.1 Baseband Serial Interface 277
8.2 Baseband Parallel Interface 282
8.3 Automatic Power Control (APC) Unit 285
8.4 Automatic Frequency Control (AFC) Unit 291

9 Baseband Front End 294
9.1 Baseband Serial Ports 295
9.2 Downlink Path (RX Path) 298
9.3 Uplink Path (TX Path) 306

10 Timing Generator 311
10.1 TDMA timer 311
10.2 Slow Clocking Unit 318

11 Power, Clocks and Reset 321
11.1 B2PSI 321
11.2 Clocks 323
11.3 Reset Generation Unit (RGU) 328
11.4 Software Power Down Control 332

12 Analog Front-end & Analog Blocks 336
12.1 General Description 336
12.2 MCU Register Definitions 347
12.3 Programming Guide 361

13 Digital Pin Electrical Characteristics 373

IWIT
聯發機密不得洩漏
MTK CONFIDENTIAL
NO DISCLOSURE
IWIT

MTK Confidential A (機密)

Preface

Acronym for Register Type

IWIT

R/W	Capable of both read and write access
RO	Read only
RC	Read only. After reading the register bank, each bit which is HIGH(1) will be cleared to LOW(0) automatically.
WO	Write only
W1S	Write only. When writing data bits to register bank, each bit which is HIGH(1) will cause the corresponding bit to be set to 1. Data bits which are LOW(0) has no effect on the corresponding bit.
W1C	Write only. When writing data bits to register bank, each bit which is HIGH(1) will cause the corresponding bit to be cleared to 0. Data bits which are LOW(0) has no effect on the corresponding bit.

聯發機密不得洩漏

MTK CONFIDENTIAL

NO DISCLOSURE

IWIT

MTK Confidential A (機密)

1. System Overview

The MT6225 is a highly integrated single chip solution for GSM/GPRS phone. Based on 32-bit ARM7EJ-S™ RISC processor, MT6225 features not only high performance GPRS Class 12 MODEM but is also designed with support for the wireless multi-media applications, such as advanced display engine, synthesis audio with 64-tone polyphony, digital audio playback, Java acceleration, MMS and etc. Additionally, MT6225 provides varieties of advanced interfaces for functionality extensions, like 3-port external memory interface, 3-port 8/16-bit parallel interface, NAND Flash, IrDA, USB and MMC/SD/MS/MS Pro. The typical application can be shown as **Figure** 1.

Platform

MT6225 is capable of running the ARM7EJ-S™ RISC processor at up to 104 MHz, thus providing fast data processing capabilities. In addition to the high clock frequency, a separate CODE cache is also added to further improve the overall system efficiency.

For large amounts of data transfer, high performance DMA (Direct Memory Access) with hardware flow control is implemented, which greatly enhances the data movement speed while reducing MCU processing load.

External Memory Interface

To provide the greatest capacity for expansion and maximum bandwidth for data intensive applications such as multimedia features, MT6225 supports up to 3 external state-of-the-art devices through its 8/16-bit host interface. High performance devices such as Mobile RAM and Cellular RAM are supported for maximum bandwidth. Traditional devices such as burst/page mode flash, page mode SRAM, and Pseudo SRAM are also supported. For greatest compatibility, the memory interface can also be used to connect to legacy devices such as Color/Parallel LCD, and multi-media companion chips are all supported through this interface. To minimize power consumption and ensure low noise, this interface is designed for flexible I/O voltage and allows lowering of the supply voltage down to 1.8V. The driving strength is configurable for signal integrity adjustment. The data bus also employs retention technology to prevent the bus from floating during a turn over.

Multi-media Subsystem

In order to provide more flexibility and bandwidth for multi-media products, an additional 8/16 bit parallel interface is incorporated. This interface is designed specially for support with Camera companion chip as well as LCD panel. In addition, MT6225 has camera YUV interface that can connect to CMOS sensor of resolution up to VGA. Moreover, it can connect NAND flash device to provide a solution for multi-media data storage. For running multi-media application faster, MT6225 integrates also several hardware-based engines. With hardware based Resizer and advanced display engine, it can display and combine arbitrary size of images with up to 4 blending layers.

User Interface

For user interactions, the MT6225 brings together all necessary peripheral blocks for multi-media GSM/GPRS phone. It comprises the Keypad Scanner with capability of multiple key pressing, SIM Controller, Alerter, Real Time Clock, PWM, Serial LCD Controller and General Purpose Programmable I/Os. For connectivity and data storage, the MT6225 consists of UART, IrDA, USB 1.1 Slave, SDIO and MMC/SD/MS/MS Pro.

Audio Interface

Using a highly integrated mixed-signal Audio Front-End, the MT6225 architecture allows for easy audio interfacing with direct connection to the audio transducers. The audio interface integrates D/A and A/D Converters for Voice band, as well as high resolution Stereo D/A Converters for Audio band. In addition, MT6225 also provides Stereo Input and Analog Mux.

MT6225 supports AMR codec to adaptively optimize speech and audio quality. Moreover, HE-AAC codec is implemented to deliver CD-quality audio at low bit rates.

Overall, MT6225's audio features provide a rich platform for multi-media applications.

IWIT
聯發機密 不得洩漏
MTK CONFIDENTIAL
NO DISCLOSURE
IWIT

MTK Confidential A (機密)

Radio Interface

MT6225 integrates a mixed-signal Baseband front-end in order to provide a well-organized radio interface with flexibility for efficient customization. It contains gain and offset calibration mechanisms, and filters with programmable coefficients for comprehensive compatibility control on RF modules. This approach also allows the usage of a high resolution D/A Converter for controlling VCXO or crystal, thus reducing the need for expensive TCVCXO. MT6225 achieves great MODEM performance by utilizing 14-bit high resolution A/D Converter in the RF downlink path. Furthermore, to reduce the need for extra external current-driving component, the driving strength of some BPI outputs is designed to be configurable.

Debug Function

The JTAG interface enables in-circuit debugging of software program with the ARM7EJ-S core. With this standardized debugger interface, the MT6225 provides developers with a wide set of options for choosing ARM development kits from supports of thirty parties. For security reason, JTAG interface can be disabled by programming internal OTP (one-time programmable) fuse.

Power Management

The MT6225 offers various low-power features to help reduce system power consumption. These features include Pause Mode of 32KHz clocking at Standby State, Power Down Mode for individual peripherals, and Processor Sleep Mode. In addition, MT6225 is also fabricated in advanced low leakage CMOS process, hence providing an overall ultra low leakage solution.

Package

The MT6225 device is offered in a 12mm×12mm, 264-ball, 0.65 mm pitch, TFBGA package.

IWIT
聯發機密不得洩漏
MTK CONFIDENTIAL
NO DISCLOSURE
IWIT

MTK Confidential A (機密)

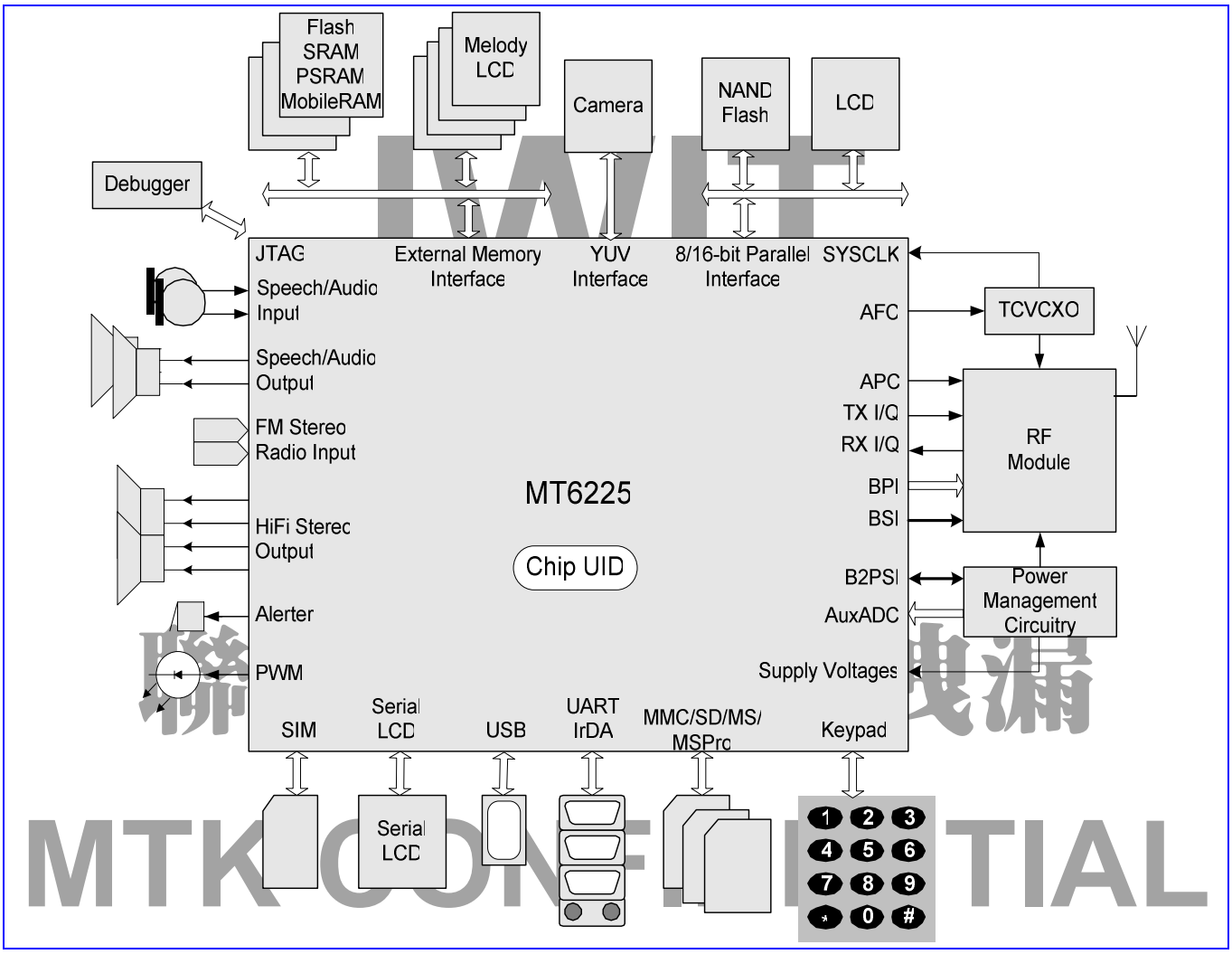

Figure 1 Typical application of MT6225

NO DISCLOSURE

IWIT

MTK Confidential A (機密)

1.1 Platform Feature

- **General**
  - Integrated voice-band, audio-band and base-band analog front ends
  - TFBGA 12mm×12mm, 264-ball, 0.65 mm pitch package
- **MCU Subsystem**
  - ARM7EJ-S 32-bit RISC processor
  - High performance multi-layer AMBA bus
  - Java hardware acceleration for fast Java-based games and applets
  - ARM7EJ-S Operating frequency: 26/52/104 MHz
  - Dedicated DMA bus
  - 14 DMA channels
  - 48K Bytes on-chip SRAM
  - 72K Bytes MCU dedicated Tightly Coupled Memory
  - 16K Bytes Code cache
  - On-chip boot ROM for Factory Flash Programming
  - Watchdog timer for system crash recovery
  - 2 sets of General Purpose Timer
  - Circuit Switch Data coprocessor
  - Division coprocessor
- **External Memory Interface**
  - Supports up to 3 external devices
  - Supports 8-bit or 16-bit memory components with maximum size of up to 64M Bytes each
  - Supports Mobile RAM and Cellular RAM
  - Supports Flash and SRAM with Page Mode or Burst Mode
  - Supports Pseudo SRAM
  - Industry standard Parallel LCD Interface
  - Supports multi-media companion chips with 8/16 bits data width
  - Flexible I/O voltage of 1.8V ~ 2.8V for memory interface
  - Configurable driving strength for memory interface
- **User Interfaces**
  - 6-row × 7-column keypad controller with hardware scanner
  - Supports multiple key presses for gaming
  - SIM/USIM Controller with hardware T=0/T=1 protocol control
  - Real Time Clock (RTC) operating with a separate power supply
  - General Purpose I/Os (GPIOs)
  - 2 Sets of Pulse Width Modulation (PWM) Output
  - Alerter Output with Enhanced PWM or PDM
  - 4~10 external interrupt lines
- **Connectivity**
  - 3 UARTs with hardware flow control and speed up to 921600 bps
  - IrDA modulator/demodulator with hardware framer supports SIR mode of operation
  - Full-speed USB 1.1 Device controller
  - Multi Media Card/Secure Digital Memory Card/Memory Stick/Memory Stick Pro host controller
  - Supports SDIO interface for SDIO peripherals as well as WIFI connectivity
  - DAI/PCM and I2S interface for Audio application
- **Security**

IWIT
聯發機密不得洩漏
MTK CONFIDENTIAL
NO DISCLOSURE
IWIT

MTK Confidential A (機密)

- Supports security key for code protection
- 143-bit unique/secret chip ID

■ **Power Management**

- Power Down Mode for analog and digital circuits
- Processor Sleep Mode
- Pause Mode of 32KHz clocking at Standby State
- 7-channel Auxiliary 10-bit A/D Converter for charger and battery monitoring and photo sensing

■ **Test and Debug**

- Built-in digital and analog loop back modes for both Audio and Baseband Front-End
- DAI port complying with GSM Rec.11.10
- JTAG port for debugging embedded MCU

IWIT
聯發機密不得洩漏
MTK CONFIDENTIAL
NO DISCLOSURE
IWIT

MTK Confidential A (機密)

1.2 MODEM Features

- **Radio Interface and Baseband Front End**
  - GMSK modulator with analog I and Q channel outputs
  - 10-bit D/A Converter for uplink baseband I and Q signals
  - 14-bit high resolution A/D Converter for downlink baseband I and Q signals
  - Calibration mechanism of offset and gain mismatch for baseband A/D Converter and D/A Converter
  - 10-bit D/A Converter for Automatic Power Control
  - 13-bit high resolution D/A Converter for Automatic Frequency Control
  - Programmable Radio RX filter
  - 2 Channels bi-directional Baseband Serial Interface (BSI) with 3-wire or 4-wire control
  - 10-Pin Baseband Parallel Interface (BPI) with programmable driving strength
  - Multi-band support
- **Voice and Modem CODEC**
  - Dial tone generation
  - Voice Memo
  - Noise Reduction
  - Echo Suppression / Echo Cancellation
  - Advanced Sidetone Oscillation Reduction
  - Digital sidetone generator with programmable gain
  - Two programmable acoustic compensation filters
  - GSM/GPRS quad vocoders for adaptive multirate (AMR), enhanced full rate (EFR), full rate (FR) and half rate (HR)
  - FR error concealment
  - GSM channel coding, equalization and A5/1, A5/2 and A5/3 ciphering
  - GPRS GEA1, GEA2 and GEA3 ciphering
  - Programmable GSM/GPRS Modem
  - Packet Switched Data with CS1/CS2/CS3/CS4 coding schemes
  - GSM Circuit Switch Data
  - GPRS Class 12
- **Voice Interface and Voice Front End**
  - Two microphone inputs sharing one low noise amplifier with programmable gain and automatic gain control (AGC) mechanism
  - Voice power amplifier with programmable gain
  - 2nd order Sigma-Delta A/D Converter for voice uplink path
  - D/A Converter for voice downlink path
  - Supports half-duplex hands-free operation
  - Compliant with GSM 03.50

IWIT
聯發機密不得洩漏
MTK CONFIDENTIAL
NO DISCLOSURE
IWIT

MTK Confidential A (機密)

1.3 Multi-Media Features

- **LCD/NAND Flash Interface**
  - 18-bit Parallel Interface supports 8/16 bit NAND flash and 8/9/16/18 bit Parallel LCD
  - 8/16 bit NAND Flash Controller with 1-bit ECC correction for mass storages
  - 2 Chip selects available for high-density NAND flash device
  - Serial LCD Interface with 8/9 bit format support
- **LCD Controller**
  - Hardware accelerated display
  - Supports simultaneous connection to up to 2 parallel LCD and 1 serial LCD modules
  - Supports format: RGB332, RGB444, RGB565, RGB666, RGB888
  - Supports LCD panel maximum resolution up to 800x600 at 16bpp
  - Supports hardware display rotation
  - Capable of combining display memories with up to 4 blending layers
  - Accelerated Gamma correction with programmable gamma table.
- **Image Signal Processor**
  - 8 bit YUV format image input
  - Capable of processing image of size up to VGA
  - Flexible I/O voltage of 1.8V ~ 2.8V
- **Audio CODEC**
  - Wavetable synthesis with up to 64 tones
  - Advanced stereo wavetable synthesizer
  - Wavetable including GM full set of 128 instruments and 47 sets of percussions
  - PCM Playback and Record
  - Digital Audio Playback
  - HE-AAC decode support
- **Audio Interface and Audio Front End**
  - Supports I2S interface
  - High resolution D/A Converters for Stereo Audio playback
  - Stereo analog input for stereo audio source
  - Analog multiplexer for Stereo Audio
  - Stereo to Mono Conversion
  - FM radio recording

IWIT
聯發機密不得洩漏
MTK CONFIDENTIAL
NO DISCLOSURE
IWIT

MTK Confidential A (機密)

1.4 General Description

Figure 2 details the block diagram of MT6225. Based on dual-processor architecture, the major processor of MT6225 is ARM7EJ-S, which mainly runs high-level GSM/GPRS protocol software as well as multi-media applications. With the other one is a digital signal processor corresponding for handling the low-level MODEM as well as advanced audio functions. Except for some mixed-signal circuitries, the other building blocks in MT6225 are connected to either the microcontroller or the digital signal processor. Specifically, MT6225 consists of the following subsystems:

- Microcontroller Unit (MCU) Subsystem, including an ARM7EJ-S RISC processor and its accompanying memory management and interrupt handling logics.
- Digital Signal Processor (DSP) Subsystem, including a DSP and its accompanying memory, memory controller, and interrupt controller.
- MCU/DSP Interface, where the MCU and the DSP exchange hardware and software information.
- Microcontroller Peripherals, which include all user interface modules and RF control interface modules.
- Microcontroller Coprocessors, which intend to run computing-intensive processes in place of Microcontroller.
- DSP Peripherals, which are hardware accelerators for GSM/GPRS channel codec.
- Multi-media Subsystem, which integrate several advanced accelerators to support multi-media applications.
- Voice Front End, the data path of conveying analog speech from and to digital speech.
- Audio Front End, also the data path of conveying stereo audio from stereo audio source
- Baseband Front End, the data path of conveying digital signal from and to analog signal of RF modules.
- Timing Generator, generating the control signals related to the TDMA frame timing.
- Power, Reset and Clock subsystem, managing the power, reset and clock distribution inside MT6225.

Details of the individual subsystems and blocks are described in following Chapters.

IWIT
聯發機密不得洩漏
MTK CONFIDENTIAL
NO DISCLOSURE
IWIT

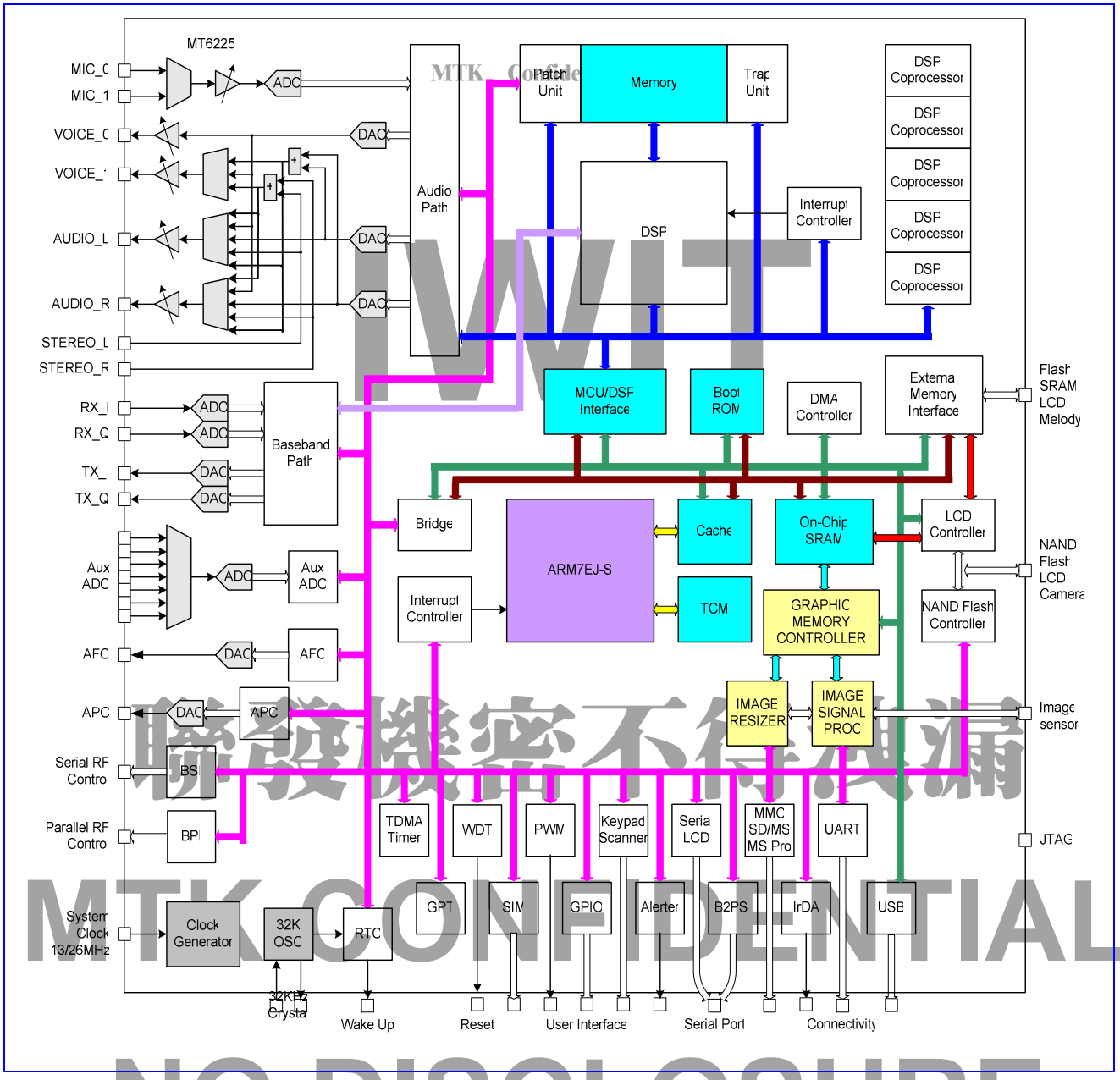

Figure 2 MT6225 block diagram.

MTK Confidential
IWIT
聯發機密不得洩漏
MTK CONFIDENTIAL
NO DISCLOSURE
IWIT

2 Product Description

MTK Confidential A (機密)

2.1 Pin Outs

One type of package for this product, TFBGA 12mm*12mm, 264-ball, 0.65 mm pitch Package, is offered.

Pin outs and the top view are illustrated in **Figure 3** for this package. Outline and dimension of package is illustrated in **Figure** 4, while the definition of package is shown in **Table** 1.

IWIT

聯發機密不得洩漏

MTK CONFIDENTIAL

NO DISCLOSURE

IWIT

	1	2	3	4	5	6	7	8	9	10	11	12	13	14	15	16	17	
A	XOUT	AVSS_PLL	SYSCLK	AFC	APC	AGND_RFE	BDLAQP	AU_VIN1_N	AVDD_AFE	AU_OUT0_N	AU_MOUTR	AU_MOUTL	CMDAT3	CMDAT6	CMVREF	GPIO9	CMPCLK	A
B	XIN	AVDD_RTC	BBWAKEUP	AVSS_RFE	AUXADIN1	AUXADIN0	BDLAQN	AU_VIN0_P	AU_VIN0_P	AU_OUT0_P	AVSS_MBUF	CMDAT0	CMDAT4	CMDAT7	CMPDN	GPIO8	CMMCLK	B
C	RIN	JTRST#	TESTMODE	AFC_BYP	AUXADIN3	AUXADIN2	BDLAIN	AGND_AFE	AU_VIN0_P	AU_MICBIAS_P	AU_FMINL	CMDAT1	CMDAT5	CMHREF	CMRST	DAISYNC	DAIPCMIN	C
D	AVSS_RTC	JTCK	JTDI	PLL_OUT	AUXADIN5	AUXADIN4	BDLAIP	AU_VREF_PI	AU_VREF_NI	AU_MICBIAS_N	AU_FMINR	CMDAT2	GPIO6	GPIO7	DAIPCMOUT	DAICLK	KROW0	D
E	JTMS	JTDO	BPI_BUS0	BPI_BUS1		AUXADIN6	AVCC_PLL	AVDD_GSMRFTX		AVDD_BUF	AVDD_MBUF	VDD33_CAM		KROW1	KROW2	KROW3	KROW4	E
F	JRTCK	BPI_BUS2	BPI_BUS3	BPI_BUS4	BPI_BUS5	BPI_BUS6	AUX_REF	AVDD_RFE	AVSS_AFE	AVSS_BUF	VSSK	VDDK	GPIO5	KROW5	KCOL0	KCOL1	KCOL2	F
G	BSI_DATA	BSI_CS0	BPI_BUS9	BPI_BUS8	BPI_BUS7	VDDK						VDDK	GPIO4	KCOL3	KCOL4	UTXD3	URXD3	G
H	BSI_CLK	LSCK	LSA0	LSDA	VDD33	VDD33		VSS33	AVSS_GSMRFTX	VSS33		VDD33	VDD33	UTXD2	URXD2	UTXD1	URXD1	H
J	LSCE0#	LSCE1#	LPCE1#	LPCE0#		VDDK		VPP	VSS33_USB	VSS33		VDD33		SIMDATA	SIMSEL	SIMVCC	SIMCLK	J
K	LRST#	LRD#	LPA0	LWR#	NLD17	VSS33		WATCHDOG	USB_DP	USB_DM		VDD33_USB	VDD33_MC	SIMRST	MCINS	MCWP	MCCK	K
L	NLD12	NLD13	NLD14	NLD15	NLD16	VDD33						VSS33_EMI	VSS33_EMI	MCDA0	MCDA1	MCDA2	MCDA3	L
M	NLD7	NLD8	NLD9	NLD10	NLD11	VDD33_EMI	VSS33	VDD33_EMI	VSS33_EMI	VSS33_EMI	VDDK	VDD33_EMI	MCCM0	ED0	ED1	ED2	ED3	M
N	NLD3	NLD4	NLD5	NLD6		VDDK	VSS33_EMI	VDD33_EMI	VSS33_EMI	VSS33_EMI	EA2	EPDN_B		ED4	ED5	ED6	ED7	N
P	NRNB	NLD0	NLD1	NLD2	EINT2	EA23	EA19	EA15	EA11	EA7	EA3	ECLK	EWR#	EUB#	ED8	ED9	ED10	P
R	NEW#	NALE		NCLE	EINT1	EA24	EA20	EA16	EA12	EA8	EA4	EADV#	ECS0#	ERD#		ED11	ED12	R
T	NREB	SRCLKENAI	GPIO0	GPIO2	EINT0	EA25	EA21	EA17	EA13	EA9	EA5	EWAIT	EDCLK	ECS2#	ECS1#	ED15	ED13	T
U	NCE#	SRCLKENA	SYSRST#	GPIO1	GPIO3	EINT3	EA22	EA18	EA14	EA10	EA6	EA1	ECKE	ERAS#	ECAS#	ELB#	ED14	U
	1	2	3	4	5	6	7	8	9	10	11	12	13	14	15	16	17	

MT6225 TFBGA
Top-View

Figure 3 Top View of MT6225 TFBGA 12mm*12mm, 264-ball, 0.65 mm pitch Package

IWIT
聯發科技 不得洩漏
MTK CONFIDENTIAL
NO DISCLOSURE
IWIT

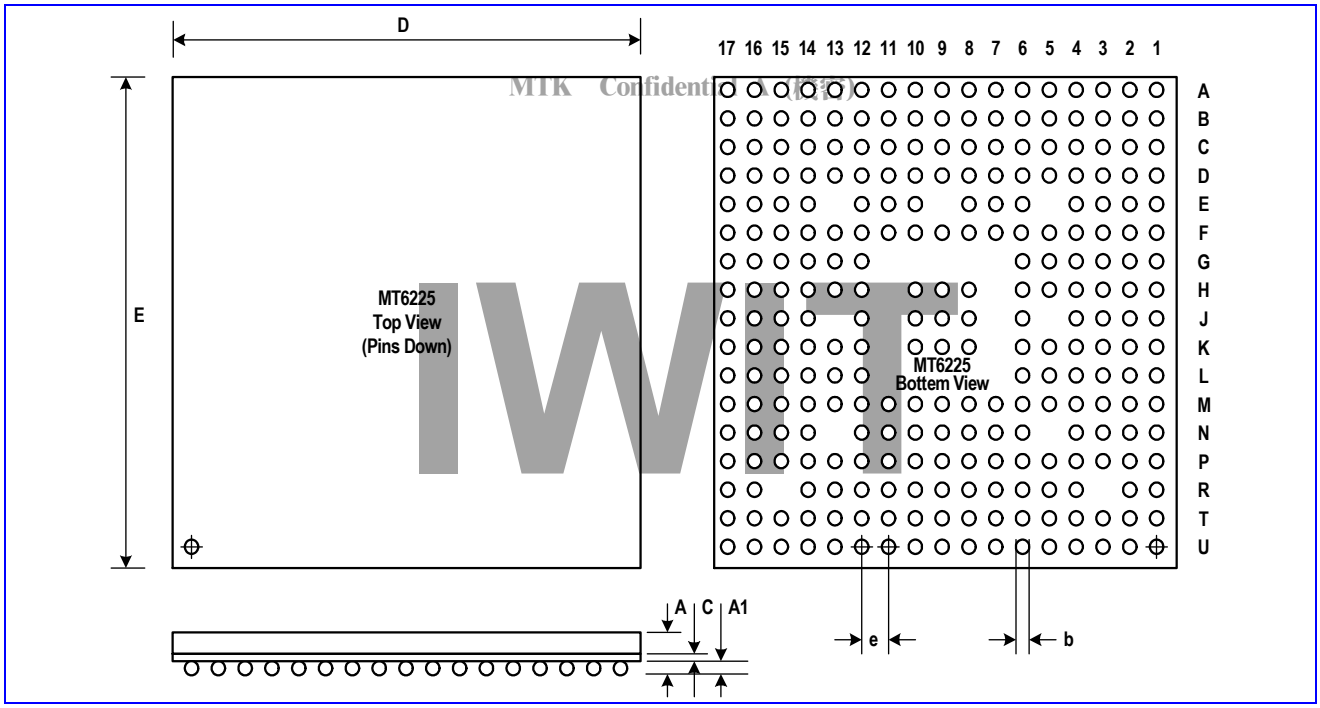

Figure 4 Outlines and Dimension of TFBGA 12mm*12mm, 264-ball, 0.65 mm pitch Package

Body Size		Ball Count	Ball Pitch	Ball Dia.	Package Thk.	Stand Off	Substrate Thk.
D	E	N	e	b	A (Max.)	A1	C
12	12	264	0.65	0.3	1.2	0.21	0.36

Table 1 Definition of TFBGA 12mm*12mm, 264-ball, 0.65 mm pitch Package (Unit: mm)

聯發機密不得洩漏
MTK CONFIDENTIAL
NO DISCLOSURE
IWIT

2.2 Top Marking Definition

MTK Confidential A (機密)

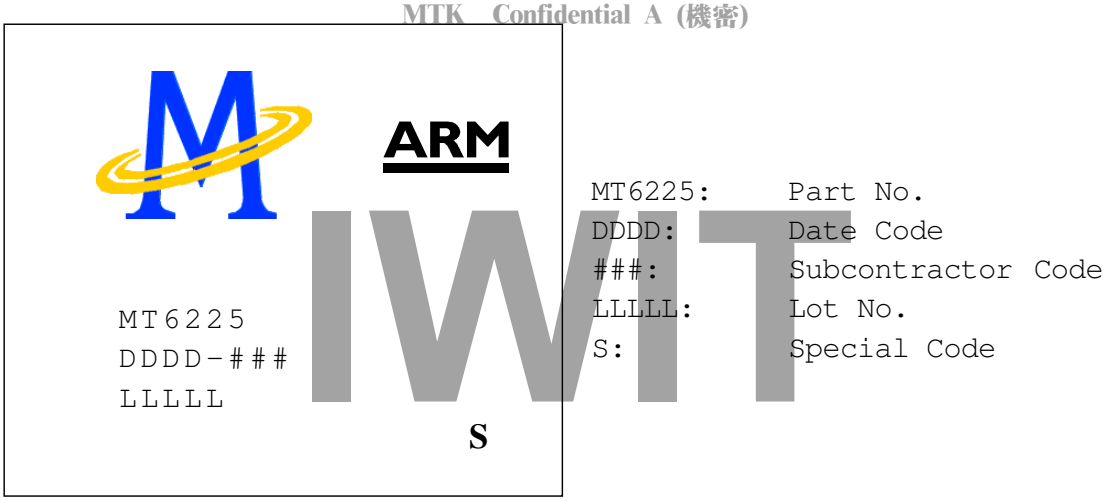

Figure 5 MT6225A top marking

IWIT
聯發機密不得洩漏
MTK CONFIDENTIAL
NO DISCLOSURE
IWIT

2.3 DC Characteristics

MTK Confidential A (機密)

2.3.1 Absolute Maximum Ratings

Prolonged exposure to absolute maximum ratings may reduce device reliability. Functional operation at these maximum ratings is not implied.

Item	Symbol	Min	Max	Unit
IO power supply	VDD33	-0.3	VDD33+0.3	V
I/O input voltage	VDD33I	-0.3	VDD33+0.3	V
Operating temperature	Topr	-20	80	Celsius
Storage temperature	Tstg	-55	125	Celsius

IWIT
聯發機密不得洩漏
MTK CONFIDENTIAL
NO DISCLOSURE
IWIT

2.4 Pin Description

MTK Confidential A (機密)

Ball 12X12	Name	Dir	Description	Mode0	Mode1	Mode2	Mode3	PU/PD	Reset	IO power
			JTAG Port							
C2	**JTRST#**	I	JTAG test port reset input					PD	Input	VDD33
D2	**JTCK**	I	JTAG test port clock input					PU	Input	
D3	**JTDI**	I	JTAG test port data input					PU	Input	
E1	**JTMS**	I	JTAG test port mode switch					PU	Input	
E2	**JTDO**	O	JTAG test port data output						0	
F1	**JRTCK**	O	JTAG test port returned clock output						0	
			RF Parallel Control Unit							
E3	**BPI_BUS0**	O	RF hard-wire control bus 0						0	VDD33
E4	**BPI_BUS1**	O	RF hard-wire control bus 1						0	
F2	**BPI_BUS2**	O	RF hard-wire control bus 2						0	
F3	**BPI_BUS3**	O	RF hard-wire control bus 3						0	
F4	**BPI_BUS4**	O	RF hard-wire control bus 4						0	
F5	**BPI_BUS5**	O	RF hard-wire control bus 5						0	
F6	BPI_BUS6	IO	RF hard-wire control bus 6	**GPIO25**	BPI_BUS6	PWM1	13MHz	PD	Input	
G5	BPI_BUS7	IO	RF hard-wire control bus 7	**GPIO26**	BPI_BUS7	PWM2	32KHz	PD	Input	
G4	BPI_BUS8	IO	RF hard-wire control bus 8	**GPIO27**	BPI_BUS8	ALERTER	26MHz	PD	Input	
G3	BPI_BUS9	IO	RF hard-wire control bus 9	**GPIO28**	BPI_BUS9	BSI_CS1		PD	Input	
			RF Serial Control Unit							
G2	**BSI_CS0**	O	RF 3-wire interface chip select 0						0	VDD33
G1	**BSI_DATA**	O	RF 3-wire interface data output						0	
H1	**BSI_CLK**	O	RF 3-wire interface clock output						0	
			Serial LCD/PM IC Interface							
H2	LSCK	IO	Serial display interface data output	**GPIO29**	LSCK	TDMA_CK	DSP_TID0	PU	Input	VDD33
H3	LSA0	IO	Serial display interface address output	**GPIO30**	LSA0	TDMA_D1	TDTIRQ	PU	Input	
H4	LSDA	IO	Serial display interface clock output	**GPIO31**	LSDA	TDMA_D0	TCTIRQ2	PU	Input	
J1	LSCE0#	IO	Serial display interface chip select 0 output	**GPIO32**	LSCE0#	TDMA_FS	TCTIRQ1	PU	Input	
J2	LSCE1#	IO	Serial display interface chip select 1 output	**GPIO33**	LSCE1#	LPCE2#	TEVTVAL	PU	Input	
			Parallel LCD/Nand-Flash Interface							
J3	LPCE1#	IO	Parallel display interface chip select 1 output	**GPIO34**	LPCE1#	NCE1#		PU	Input	VDD33
J4	**LPCE0#**	O	Parallel display interface chip select 0 output						1	
K1	**LRST#**	O	Parallel display interface Reset Signal						1	

IWIT
聯發機密不得洩漏
MTK CONFIDENTIAL
NO DISCLOSURE
IWIT

MTK Confidential A (機密)

K2	**LRD#**	O	Parallel display interface Read Strobe						1	
K3	**LPA0**	O	Parallel display interface address output						1	
K4	**LWR#**	O	Parallel display interface Write Strobe						1	
K5	NLD17	IO	Parallel LCD/Nand-Flash Data 17	**GPIO35**	NLD17	KCOL5	VPP65	PD	Input	
L5	NLD16	IO	Parallel LCD/Nand-Flash Data 16	**GPIO36**	NLD16	KCOL6		PD	Input	
L4	**NLD15**	IO	Parallel LCD/Nand-Flash Data 15					PD	Input	
L3	**NLD14**	IO	Parallel LCD/Nand-Flash Data 14					PD	Input	
L2	**NLD13**	IO	Parallel LCD/Nand-Flash Data 13					PD	Input	
L1	**NLD12**	IO	Parallel LCD/Nand-Flash Data 12					PD	Input	
M5	**NLD11**	IO	Parallel LCD/Nand-Flash Data 11					PD	Input	
M4	**NLD10**	IO	Parallel LCD/Nand-Flash Data 10					PD	Input	
M3	**NLD9**	IO	Parallel LCD/Nand-Flash Data 9					PD	Input	
M2	**NLD8**	IO	Parallel LCD/Nand-Flash Data 8					PD	Input	
M1	**NLD7**	IO	Parallel LCD/Nand-Flash Data 7					PD	Input	
N4	**NLD6**	IO	Parallel LCD/Nand-Flash Data 6					PD	Input	
N3	**NLD5**	IO	Parallel LCD/Nand-Flash Data 5					PD	Input	
N2	**NLD4**	IO	Parallel LCD/Nand-Flash Data 4					PD	Input	
N1	**NLD3**	IO	Parallel LCD/Nand-Flash Data 3					PD	Input	
P4	**NLD2**	IO	Parallel LCD/Nand-Flash Data 2					PD	Input	
P3	**NLD1**	IO	Parallel LCD/Nand-Flash Data 1					PD	Input	
P2	**NLD0**	IO	Parallel LCD/Nand-Flash Data 0					PD	Input	
P1	NRNB	IO	Nand-Flash Read/Busy Flag	**GPIO37**	NRNB	DSP_TID 1		PU	Input	
R4	NCLE	IO	Nand-Flash Command Latch Signal	**GPIO38**	NCLE	DSP_TID 2		PD	Input	
R2	NALE	IO	Nand-Flash Address Latch Signal	**GPIO39**	NALE	DSP_TID 3		PD	Input	
R1	NWE#	IO	Nand-Flash Write Strobe	**GPIO40**	NWE#	DSP_TID 4		PU	Input	
T1	NRE#	IO	Nand-Flash Read Strobe	**GPIO41**	NRE#	DSP_TID 5		PU	Input	
U1	NCE#	IO	Nand-Flash Chip select output	**GPIO42**	NCE#	DSP_TID 6		PU	Input	
			SIM Card Interface							
K14	**SIMRST**	O	SIM card reset output						0	VDD33
J17	**SIMCLK**	O	SIM card clock output						0	
J16	**SIMVCC**	O	SIM card supply power control						0	

IWIT
聯發機密不得洩漏
MTK CONFIDENTIAL
NO DISCLOSURE
IWIT

J15	SIMSEL	IO	SIM card supply power select	**GPIO46**	SIMSEL			PD	Input	
J14	**SIMDATA**	IO	SIM card data input/output						0	
			Dedicated GPIO Interface							
T3	**GPIO0**	IO	General purpose input/output 0	**GPIO0**			EINT4	PU	Input	
U4	**GPIO1**	IO	General purpose input/output 1	**GPIO1**			EINT5	PU	Input	
T4	**GPIO2**	IO	General purpose input/output 2	**GPIO2**		UCTS1	EINT6	PU	Input	
U5	**GPIO3**	IO	General purpose input/output 3	**GPIO3**	BSI_RFIN	URTS1	EINT7	PU	Input	VDD33
G13	**GPIO4**	IO	General purpose input/output 4	**GPIO4**	DAIRST	IRDA_PDN	DSP_CLK	PU	Input	
F13	**GPIO5**	IO	General purpose input/output 5	**GPIO5**	EDICK	26MHz	AHB_CLK	PD	Input	
D13	**GPIO6**	IO	General purpose input/output 6	**GPIO6**	EDIWS	32KHz	ARM_CLK	PD	Input	
D14	**GPIO7**	IO	General purpose input/output 7	**GPIO7**	EDIDAT		SLOW_CLK	PD	Input	
B16	**GPIO8**	IO	General purpose input/output 8	**GPIO8**	SCL			PU	Input	VDD33_CAM
A16	**GPIO9**	IO	General purpose input/output 9	**GPIO9**	SDA			PU	Input	
			Miscellaneous							
U3	**SYSRST#**	I	System reset input active low						Input	
K8	**WATCHDOG**	O	Watchdog reset output						1	
U2	**SRCLKENA**	O	External TCXO enable output active high	GPO0	**SRCLKENA**				1	VDD33
T2	SRCLKENAI	IO	External TCXO enable input	**GPIO43**	SRCLKENAI			PD	Input	
			Keypad Interface							
G15	**KCOL4**	I	Keypad column 4					PU	Input	
G14	**KCOL3**	I	Keypad column 3					PU	Input	
F17	**KCOL2**	I	Keypad column 2					PU	Input	
F16	**KCOL1**	I	Keypad column 1					PU	Input	
F15	**KCOL0**	I	Keypad column 0					PU	Input	VDD33
F14	**KROW5**	O	Keypad row 5						0	
E17	**KROW4**	O	Keypad row 4						0	
E16	**KROW3**	O	Keypad row 3						0	
E15	**KROW2**	O	Keypad row 2						0	
E14	**KROW1**	O	Keypad row 1						0	
D17	**KROW0**	O	Keypad row 0						0	
			External Interrupt Interface							
T5	**EINT0**	I	External interrupt 0					PU	Input	
R5	**EINT1**	I	External interrupt 1					PU	Input	VDD33
P5	**EINT2**	I	External interrupt 2					PU	Input	
U6	**EINT3**	I	External interrupt 3					PU	Input	

MTK Confidential A (機密)
IWIT
聯發機密不得洩漏
MTK CONFIDENTIAL
NO DISCLOSURE
IWIT

			External Memory Interface							
M14	**ED0**	IO	External memory data bus 0						Input	VDD33_EMI
M15	**ED1**	IO	External memory data bus 1						Input	
M16	**ED2**	IO	External memory data bus 2						Input	
M17	**ED3**	IO	External memory data bus 3						Input	
N14	**ED4**	IO	External memory data bus 4						Input	
N15	**ED5**	IO	External memory data bus 5						Input	
N16	**ED6**	IO	External memory data bus 6						Input	
N17	**ED7**	IO	External memory data bus 7						Input	
P15	**ED8**	IO	External memory data bus 8						Input	
P16	**ED9**	IO	External memory data bus 9						Input	
P17	**ED10**	IO	External memory data bus 10						Input	
R16	**ED11**	IO	External memory data bus 11						Input	
R17	**ED12**	IO	External memory data bus 12						Input	
T17	**ED13**	IO	External memory data bus 13						Input	
U17	**ED14**	IO	External memory data bus 14						Input	
T16	**ED15**	IO	External memory data bus 15						Input	
R14	**ERD#**	O	External memory read strobe						1	
P13	**EWR#**	O	External memory write strobe						1	
R13	**ECS0#**	O	External memory chip select 0						1	
T15	**ECS1#**	O	External memory chip select 1						1	
T14	**ECS2#**	O	External memory chip select 2						1	
U16	**ELB#**	O	External memory lower byte strobe						1	
P14	**EUB#**	O	External memory upper byte strobe						1	
N12	**EPDN#**	O	Power Down Control Signal for PSRAM	GPO3	**EPDN#**	6.5MHz	26MHz		0*	
R12	**EADV#**	O	Address valid for burst mode flash memory						1	
T12	**EWAIT**	I	External device wait signal						Input	
P12	**ECLK**	O	Clock for flash memory						0	
U14	**ERAS#**	O	Mobile SDRAM row address strobe						1	
U15	**ECAS#**	O	Mobile SDRAM column address strobe						1	
U13	**ECKE**	O	Mobile SDRAM clock enable						0	
T13	**EDCLK**	O	Mobile SDRAM clock						0	
U12	**EA1**	O	External memory address bus 1						0	
N11	**EA2**	O	External memory address bus 2						0	
P11	**EA3**	O	External memory address bus 3						0	

MTK Confidential A (機密)
IWIT
聯發機密不得洩漏
MTK CONFIDENTIAL
NO DISCLOSURE
IWIT

MTK Confidential A (機密)

R11	**EA4**	O	External memory address bus 4						0	
T11	**EA5**	O	External memory address bus 5						0	
U11	**EA6**	O	External memory address bus 6						0	
P10	**EA7**	O	External memory address bus 7						0	
R10	**EA8**	O	External memory address bus 8						0	
T10	**EA9**	O	External memory address bus 9						0	
U10	**EA10**	O	External memory address bus 10						0	
P9	**EA11**	O	External memory address bus 11						0	
R9	**EA12**	O	External memory address bus 12						0	
T9	**EA13**	O	External memory address bus 13						0	
U9	**EA14**	O	External memory address bus 14						0	
P8	**EA15**	O	External memory address bus 15						0	
R8	**EA16**	O	External memory address bus 16						0	
T8	**EA17**	O	External memory address bus 17						0	
U8	**EA18**	O	External memory address bus 18						0	
P7	**EA19**	O	External memory address bus 19						0	
R7	**EA20**	O	External memory address bus 20						0	
T7	**EA21**	O	External memory address bus 21						0	
U7	**EA22**	O	External memory address bus 22						0	
P6	**EA23**	O	External memory address bus 23						0	
R6	**EA24**	O	External memory address bus 24	GPO1	**EA24**	26MHz	32KHz		0	
T6	**EA25**	O	External memory address bus 25	GPO2	**EA25**	32KHz	26MHz		0	
			USB Interface							
K9	**USB_DP**	IO	USB D+ Input/Output							VDD33 _USB
K10	**USB_DM**	IO	USB D- Input/Output							
			Memory Card Interface							
M13	**MCCM0**	IO	SD Command/MS Bus State Output					PU/ PD	0	
L14	**MCDA0**	IO	SD Serial Data IO 0/MS Serial Data IO					PU/ PD	Inpu t	
L15	**MCDA1**	IO	SD Serial Data IO 1					PU/ PD	Inpu t	
L16	**MCDA2**	IO	SD Serial Data IO 2					PU/ PD	Inpu t	VDD33 _MC
L17	**MCDA3**	IO	SD Serial Data IO 3					PU/ PD	Inpu t	
K17	**MCCK**	O	SD Serial Clock/MS Serial Clock Output						0	
K16	MCWP	IO	SD Write Protect Input	**GPIO44**	MCWP			PU	Inpu t	
K15	MCINS	IO	SD Card Detect Input	**GPIO45**	MCINS			PU	Inpu t	
			UART Interface							
H17	**URXD1**	I	UART 1 receive data					PU	Inpu t	
H16	**UTXD1**	O	UART 1 transmit data						1	
H15	URXD2	IO	UART 2 receive data	**GPIO47**	URXD2	UCTS3	IRDA_R XD	PU	Inpu t	
H14	UTXD2	IO	UART 2 transmit data	**GPIO48**	UTXD2	URTS3	IRDA_T XD	PU	Inpu t	VDD33
G17	URXD3	IO	UART 3 receive data	**GPIO49**	URXD3	UCTS2		PU	Inpu t	
G16	UTXD3	IO	UART 3 transmit data	**GPIO50**	UTXD3	URTS2		PU	Inpu t	
			Digital Audio Interface							

IWIT
研發機密不得洩漏
MTK CONFIDENTIAL
NO DISCLOSURE
IWIT

D16	DAICLK	IO	DAI clock output	**GPIO51**	DAICLK			PU	Input	
D15	DAIPCMOUT	IO	DAI pcm data out	**GPIO52**	DAIPCMOUT			PD	Input	VDD33
C17	DAIPCMIN	IO	DAI pcm data input	**GPIO53**	DAIPCMIN			PU	Input	
C16	DAISYNC	IO	DAI frame synchronization signal output	**GPIO54**	DAISYNC			PU	Input	
			Image Sensor Interface							
C15	CMRST	IO	Image sensor reset signal output	**GPIO10**	CMRST			PD	Input	
B15	CMPDN	IO	Image sensor power down control	**GPIO11**	CMPDN			PD	Input	
A15	CMVREF	IO	Sensor vertical reference signal input	**GPIO12**	MIRQ			PU/PD	Input	
C14	CMHREF	IO	Sensor horizontal reference signal input	**GPIO13**	MFIQ			PU/PD	Input	
A17	**CMPCLK**	I	Image sensor pixel clock input					PD	Input	
B17	CMMCLK	IO	Image sensor master clock output	**GPIO14**	CMMCLK	26MHz	6.5MHz	PD	Input	
B14	CMDAT7	IO	Image sensor data input 7	**GPIO15**	CMDAT7	MCDA7		PD	Input	
A14	CMDAT6	IO	Image sensor data input 6	**GPIO16**	CMDAT6	MCDA6	DICK	PD	Input	VDD33_CAM
C13	CMDAT5	IO	Image sensor data input 5	**GPIO17**	CMDAT5	MCDA5	DID	PD	Input	
B13	CMDAT4	IO	Image sensor data input 4	**GPIO18**	CMDAT4	MCDA4	DIMS	PD	Input	
A13	CMDAT3	IO	Image sensor data input 3	**GPIO19**	CMDAT3	DSP_GPO3	TBTXEN	PD	Input	
D12	CMDAT2	IO	Image sensor data input 2	**GPIO20**	CMDAT2	DSP_GPO2	TBTXFS	PD	Input	
C12	CMDAT1	IO	Image sensor data input 1	**GPIO21**	CMDAT1	DSP_GPO1	TBRXEN	PD	Input	
B12	CMDAT0	IO	Image sensor data input 0	**GPIO22**	CMDAT0	DSP_GPO0	TBRXFS	PD	Input	
			Analog Interface							
A12	**AU_MOUL**		Audio analog output left channel							
A11	**AU_MOUR**		Audio analog output right channel							
C11	**AU_FMINL**		FM radio analog input left channel							
D11	**AU_FMINR**		FM radio analog input right channel							
A10	**AU_OUT0_N**		Earphone 0 amplifier output (-)							
B10	**AU_OUT0_P**		Earphone 0 amplifier output (+)							
C10	**AU_MICBIAS_P**		Microphone bias supply (+)							
D10	**AU_MICBIAS_N**		Microphone bias supply (-)							
D9	**AU_VREF_N**		Audio reference voltage (-)							
D8	**AU_VREF_P**		Audio reference voltage (+)							
B9	**AU_VIN0_P**		Microphone 0 amplifier input (+)							
C9	**AU_VIN0_N**		Microphone 0 amplifier input (-)							
A8	**AU_VIN1_N**		Microphone 1 amplifier input (-)							
B8	**AU_VIN1_P**		Microphone 1 amplifier input (+)							
A7	**BDLAQP/BU**		Quadrature input (Q+) baseband							

MTK Confidential A (Party)
IWIT
聯發機密不得洩漏
MTK CONFIDENTIAL
NO DISCLOSURE
IWIT

	PAQP		codec downlink/uplink							
B7	**BDLAQN/BUPAQN**		Quadrature input (Q-) baseband codec downlink/uplink							
C7	**BDLAIN/BUPAIN**		In-phase input (I+) baseband codec downlink/uplink							
D7	**BDLAIP/BUPAIP**		In-phase input (I-) baseband codec downlink/uplink							
A5	**APC**		Automatic power control DAC output							
B6	**AUXADIN0**		Auxiliary ADC input 0							
B5	**AUXADIN1**		Auxiliary ADC input 1							
C6	**AUXADIN2**		Auxiliary ADC input 2							
C5	**AUXADIN3**		Auxiliary ADC input 3							
D6	**AUXADIN4**		Auxiliary ADC input 4							
D5	**AUXADIN5**		Auxiliary ADC input 5							
E6	**AUXADIN6**		Auxiliary ADC input 6							
F7	**AUX_REF**		Auxiliary ADC reference voltage input							
A4	**AFC**		Automatic frequency control DAC output							
C4	**AFC_BYP**		Automatic frequency control DAC bypass capacitance							
			VCXO Interface							
A3	**SYSCLK**		13MHz or 26MHz system clock input							AVCC_PLL
D4	**PLL_OUT**		PLL test pin							
			RTC Interface							
A1	**XOUT**		32.768 KHz crystal output							AVDD_RTC
B1	**XIN**		32.768 KHz crystal input							
C1	**RIN**		32.768 KHz crystal gain control resistor							
B3	**BBWAKEUP**	O	Baseband power on/off control						1	
C3	**TESTMODE**	I	TESTMODE enable input						PD	Input
			Supply Voltages							
F12	**VDDK**		Supply voltage of internal logic							Typ. 1.8V
G6	**VDDK**		Supply voltage of internal logic							
J6	**VDDK**		Supply voltage of internal logic							
G12	**VDDK**		Supply voltage of internal logic							
N6	**VDDK**		Supply voltage of internal logic							
M11	**VDDK**		Supply voltage of internal logic							
M6	**VDD33_EMI**		Supply voltage of memory interface driver							Typ. 1.8~2.8V
M8	**VDD33_EMI**		Supply voltage of memory interface driver							
N8	**VDD33_EMI**		Supply voltage of memory interface driver							
M12	**VDD33_EMI**		Supply voltage of memory interface driver							
N7	**VSS33_EMI**		Ground of memory interface driver							
M9	**VSS33_EMI**		Ground of memory interface driver							
N9	**VSS33_EMI**		Ground of memory interface driver							
M10	**VSS33_EMI**		Ground of memory interface driver							

MTK Confidential A (機密)
IWIT
聯發科技公司保密文件
MTK CONFIDENTIAL
NO DISCLOSURE
IWIT

N10	**VSS33_EMI**		Ground of memory interface driver						
L12	**VSS33_EMI**		Ground of memory interface driver						
L13	**VSS33_EMI**		Ground of memory interface driver						
K12	**VDD33_USB**		Supply voltage of USB transceiver						Typ. 3.3V
K13	**VDD33_MC**		Supply voltage of memory card interface drivers						Typ. 2.8V
J9	**VSS33_USB/ MC**		Ground of USB/memory card interface						
E12	**VDD33_CAM**		Supply voltage of image sensor interface drivers						Typ. 1.8~2.8 V
H5	**VDD33**		Supply voltage for pad						
H6	**VDD33**		Supply voltage for pad						
L6	**VDD33**		Supply voltage for pad						Typ. 2.8V
J12	**VDD33**		Supply voltage for pad						
H13	**VDD33**		Supply voltage for pad						
H12	**VDD33**		Supply voltage for pad						
H8	**VSS33**		Ground						
K6	**VSS33**		Ground						
M7	**VSS33**		Ground						
J10	**VSS33**		Ground						
H10	**VSS33**		Ground						
F11	**VSSK**		Ground						
J8	**VPP**		Supply voltage for OTP programming						Typ. 1.8~6.5V
B2	**AVDD_RTC**		Supply voltage for Real Time Clock						Typ. 1.5V
D1	**AVSS_RTC**		Ground for Real Time Clock						
			Analog Supplies						
E7	**AVCC_PLL**		Supply voltage for PLL						Typ. 1.8V
A2	**AVSS_PLL**		Ground for PLL supply						
E11	**AVDD_MBUF**		Supply Voltage for Audio band section						Typ. 2.8V
B11	**AVSS_MBUF**		GND for Audio band section						
E10	**AVDD_BUF**		Supply voltage for voice band transmit section						Typ. 2.8V
F10	**AVSS_BUF**		GND for voice band transmit section						
A9	**AVDD_AFE**		Supply voltage for voice band receive section						Typ. 2.8V
C8	**AGND_AFE**		GND reference voltage for voice band section						
F9	**AVSS_AFE**		GND for voice band receive section						
A6	**AGND_RFE**		GND reference voltage for baseband section, APC, AFC and AUXADC						
H9	**AVSS_GSMR FTX**		GND for baseband transmit section						
E8	**AVDD_GSMR FTX**		Supply voltage for baseband transmit section						Typ. 2.8V

MTK Confidential A (機密)
IWIT
聯發機密不得洩漏
MTK CONFIDENTIAL
NO DISCLOSURE
IWIT

B4	**AVSS_RFE**		GND for baseband receive section, APC, AFC and AUXADC						
F8	**AVDD_RFE**		Supply voltage for baseband receive section, APC, AFC and AUXADC						Typ. 2.8V

Table 2 Pin Descriptions (**Bolded** types are functions at reset)

*Note: The state of EPDN# during the system reset is low, and it changes to high after the system reset is released.

MTK Confidential A (機密)
IWIT
聯發機密不得洩漏
MTK CONFIDENTIAL
NO DISCLOSURE
IWIT

2.5 Ordering information

MTK Confidential A (機密)

2.5.1 MT6225A

Part number	Package	Operational temperature range
MT6225A/ACS	12x12x1.2 mm 264-TFBGA	-20~80°C
MT6225A/ACS-L	12x12x1.2 mm 264-TFBGA (Pb free)	-20~80°C

Table 3 MT6225A ordering information

IWIT

聯發機密不得洩漏

MTK CONFIDENTIAL

NO DISCLOSURE

IWIT

3 Micro-Controller Unit Subsystem

MTK Confidential A (機密)

Figure 6 illustrates the block diagram of the Micro-Controller Unit Subsystem in MT6225. The subsystem utilizes a main 32-bit ARM7EJ-S RISC processor, which plays the role of the main bus master controlling the whole subsystem. All processor transactions go to code cache first. The code cache controller accesses TCM (72KB memory dedicated to ARM7EJS core), cache memory, or bus according to the processor's request address. If the requested content is found in TCM or in cache, no bus transaction is required. If the code cache hit rate is high enough, bus traffic can be effectively reduced and processor core performance maximized. In addition to the benefits of reuse of memory contents, code cache also has a MPU (Memory Protection Unit), which allows cacheable and protection settings of predefined regions. The contents of code cache are only accessible to MCU, and only MCU instructions are kept in the cache memory (thus the name "code" cache).

The bus comprises of two-level system buses: Advanced High-Performance Bus (AHB) and Advanced Peripheral Bus (APB). All bus transactions originate from bus masters, while slaves can only respond to requests from bus masters. Before data transfer can be established, the bus master must ask for bus ownership, accomplished by request-grant handshaking protocol between masters and arbiters.

Two levels of bus hierarchy are designed to provide optimum usage for different performance requirements. Specifically, AHB Bus, the main system bus, is tailored toward high-speed requirements and provides 32-bit data path with multiplex scheme for bus interconnections. The APB Bus, on the other hand, is designed to reduce interface complexity for lower data transfer rate, and so it is isolated from high bandwidth AHB Bus by APB Bridge. APB Bus supports 16-bit addressing and both 16-bit and 32-bit data paths. APB Bus is also optimized for minimal power consumption by turning off the clock when there is no APB bus activity.

During operation, if the target slave is located on AHB Bus, the transaction is conducted directly on AHB Bus. However, if the target slave is a peripheral and is attached to the APB bus, then the transaction is conducted between AHB and APB bus through the use of APB Bridge.

The MT6225 MCU subsystem supports only memory addressing method. Therefore all components are mapped onto the MCU 32-bit address space. A Memory Management Unit is employed to allow for a central decode scheme. The MMU generates appropriate selection signals for each memory-addressed module on the AHB Bus.

In order to off-load the processor core, a DMA Controller is designated to act as a master and share the bus resources on AHB Bus to do fast data movement between modules. This controller comprises thirteen DMA channels.

The Interrupt Controller provides a software interface to manipulate interrupt events. It can handle up to 32 interrupt sources asserted at the same time. In general, it generates 2 levels of interrupt requests, FIQ and IRQ, to the processor.

A 128K Byte SRAM is provided for acting as system memory for high-speed data access. For factory programming purpose, a Boot ROM module is used. These two modules use the same Internal Memory Controller to connect to AHB Bus.

External Memory Interface supports both 8-bit and 16-bit devices. Since AHB Bus is 32-bit wide, all the data transfer will be converted into several 8-bit or 16-bit cycles depending on the data width of target device. Note that, this interface is specific to both synchronous and asynchronous components, like Flash, SRAM and parallel LCD. This interface supports also page and burst mode type of Flash.

IWIT
聯發機密不得洩漏
MTK CONFIDENTIAL
NO DISCLOSURE
IWIT

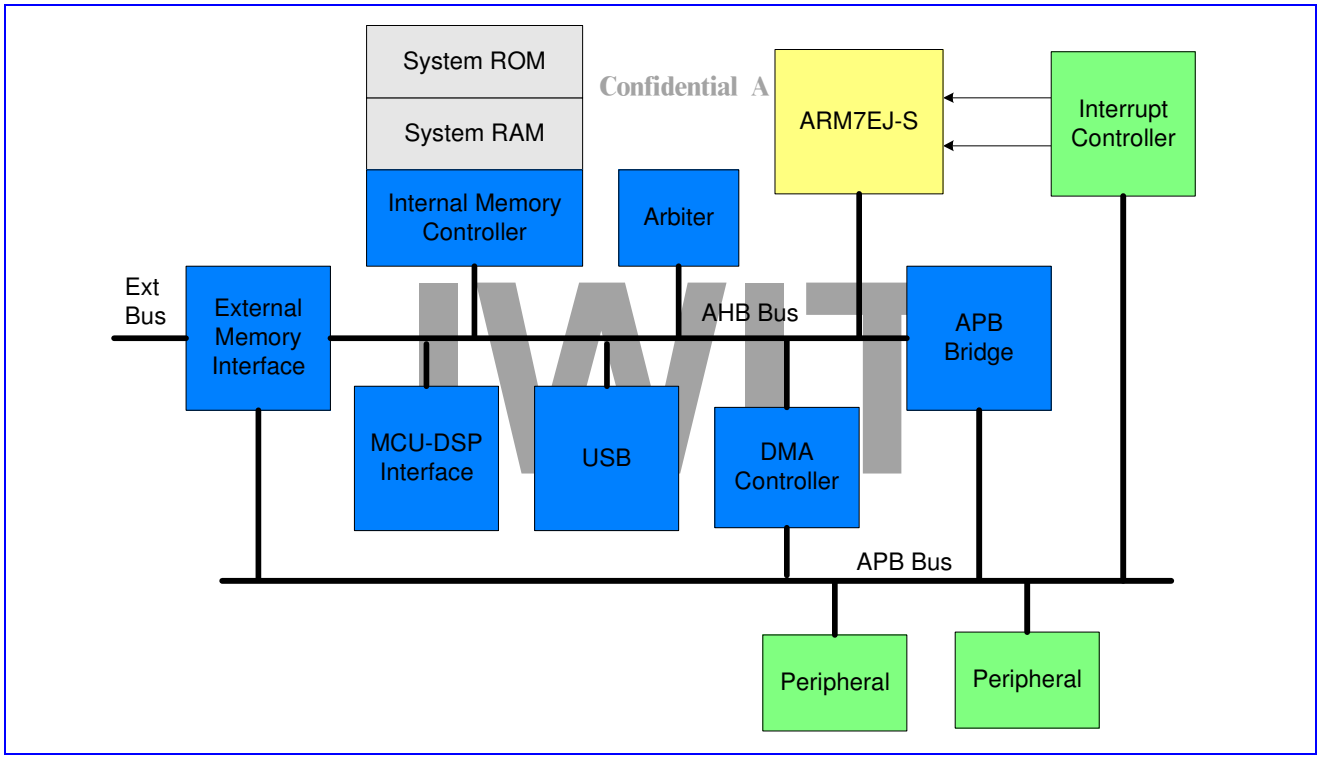

Figure 6 Block Diagram of the Micro-Controller Unit Subsystem in MT6225

聯發機密不得洩漏

3.1 Processor Core

3.1.1 General Description

The Micro-Controller Unit Subsystem in MT6225 is built up with a 32-bit RISC core, ARM7EJ-S that is based on Von Neumann architecture with a single 32-bit data bus carrying both instructions and data. The memory interface of ARM7EJ-S is totally compliant to AMBA based bus system. Basically, it can be connected to AHB Bus directly.

MTK CONFIDENTIAL

3.2 Memory Management

3.2.1 General Description

NO DISCLOSURE

The processor core of MT6225, ARM7EJ-S, supports only memory addressing method for instruction fetch and data access. It manages a 32-bit address space that has addressing capability up to 4GB. System RAM, System ROM, Registers, MCU Peripherals and external components are all mapped onto such 32-bit address space, as depicted in **Figure 7**.

IWIT

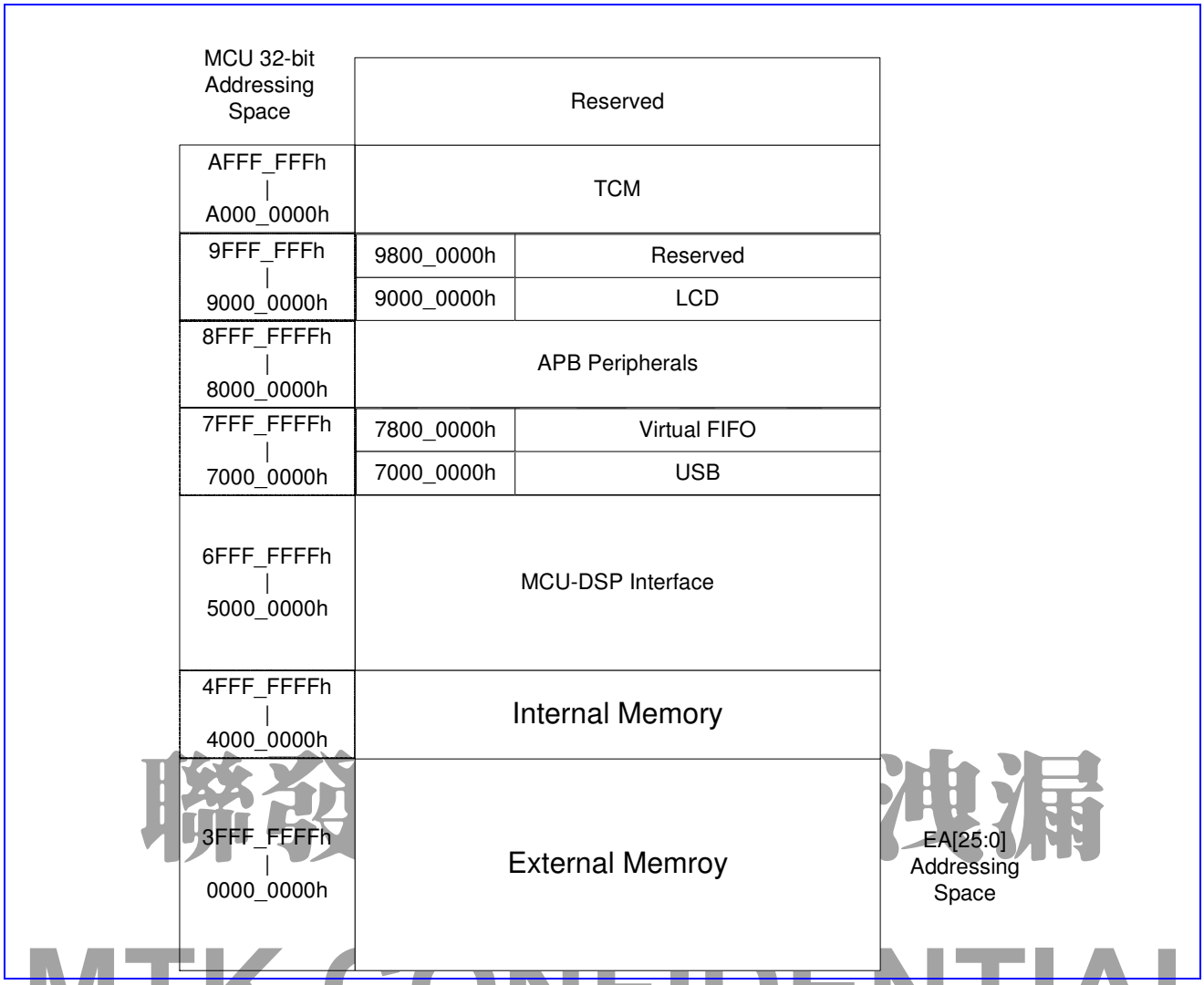

聯發科技 洩漏
MTK CONFIDENTIAL

Figure 7 The Memory Layout of MT6225

The address space is organized as basis of blocks with size of 256M Bytes for each. Memory blocks MB0-MB9 are determined and currently dedicated to specific functions, as shown in **Table 4**, while the others are reserved for future usage. Essentially, the block number is uniquely selected by address line A31-A28 of internal system bus.

NO DISCLOSURE

Memory Block	Block Address A31-A28	Address Range	Description
MB0	0h	00000000h-07FFFFFFh	Boot Code, EXT SRAM or EXT Flash/MISC
		08000000h-0FFFFFFFh	EXT SRAM or EXT Flash/MISC
MB1	1h	10000000h-17FFFFFFh	EXT SRAM or EXT Flash/MISC
		18000000h-1FFFFFFFh	Reserved
MB2	2h	20000000h-27FFFFFFh	Reserved
		28000000h-2FFFFFFFh	Reserved
MB3	3h	30000000h-37FFFFFFh	Reserved
		38000000h-3FFFFFFFh	Reserved
MB4	4h	40000000h-47FFFFFFh	System RAM
		48000000h-4FFFFFFFh	System ROM
MB5	5h	50000000h-5FFFFFFFh	MCU-DSP Interface

IWIT

MB6	6h	60000000h-6FFFFFFFh	
MB7	7h	70000000h-77FFFFFFh	USB
		78000000h-7FFFFFFFh	Virtual FIFO
MB8	8h	80000000h-8FFFFFFFh	APB Slaves
MB9	9h	90000000h-97FFFFFFh	LCD
		98000000h-9FFFFFFFh	Reserved
MB10	Ah	A0000000h-AFFFFFFFh	TCM

Table 4 Definitions of Memory Blocks in MT6225

MTK Confidential A (機密)

3.2.1.1 External Access

To have external access, the MT6225 outputs 25 bits (A25-A1) of address lines along with 3 selection signals that correspond to associated memory blocks. That is, MT6225 can support at most 3 MCU addressable external components. The data width of internal system bus is fixed as 32-bit wide, while the data width of the external components is fixed as 16 bit.

Since devices are usually available with variety operating grades, adaptive configurations for different applications are needed. MT6225 provides software programmable registers to configure to adapt operating conditions in terms of different wait-states.

3.2.1.2 Memory Re-mapping Mechanism

To permit system being configured with more flexible, a memory re-mapping mechanism is provided. It allows software program to swap BANK0 (ECS0#) and BANK1 (ECS1#) dynamically. Whenever the bit value of RM0 in register EMI_REMAP is changed, these two banks will be swapped accordingly. Besides, it also permits system being boot in different sequence as detailed in 3.2.1.3 Boot Sequence.

3.2.1.3 Boot Sequence

Since the ARM7EJ-S core always starts to fetch instructions from the lowest memory address at 00000000h after system has been reset, the system is designed to have a dynamic mapping architecture capable of associating Boot Code, external Flash or external SRAM with the memory block 0000_0000h – 07ff_ffffh.

By default, the Boot Code is mapped onto 0000_0000h – 07ff_ffffh after a system reset. In this special boot mode, External Memory Controller does not access external memory; instead, the EMI Controller send predefined Boot Code back to the ARM7EJS-S core, which instructs the processor to execute the program in System ROM. This configuration can be changed by programming bit value of RM1 in register EMI_REMAP directly.

MT6225 system provides one boot up scheme:

- Start up system of running codes from Boot Code for factory programming or NAND flash boot.

3.2.1.3.1 Boot Code

The Boot Code is placed together with Memory Re-Mapping Mechanism in External Memory Controller, and comprises of just two words of instructions as shown below. A jump instruction leads the processor to run the code starting at address 48000000h where the System ROM is placed.

```
ADDRESS      BINARY CODE     ASSEMBLY
00000000h    E51FF004h       LDR PC, 0x4
00000004h    48000000h       (DATA)
```

聯發科技 MTK CONFIDENTIAL NO DISCLOSURE

3.2.1.3.2 Factory Programming

MTK Confidential A (機密)

The configuration for factory programming is shown in **Figure 8**. Usually the Factory Programming Host connects with MT6225 by way of UART interface. To have it works properly, the system should boot up from Boot Code. That is the IBOOT should be tied to GND. The down load speed can be up to 921K bps while MCU is running at 26MHz.

After system being reset, the Boot Code will guide the processor to run the Factory Programming software placed in System ROM. Then, MT6225 will start and continue to poll the UART1 port until valid information is detected. The first information received on the UART1 will be used to configure the chip for factory programming. The Flash down loader program is then transferred into System RAM or external SRAM.

Further information will be detailed in MT6225 Software Programming Specification.

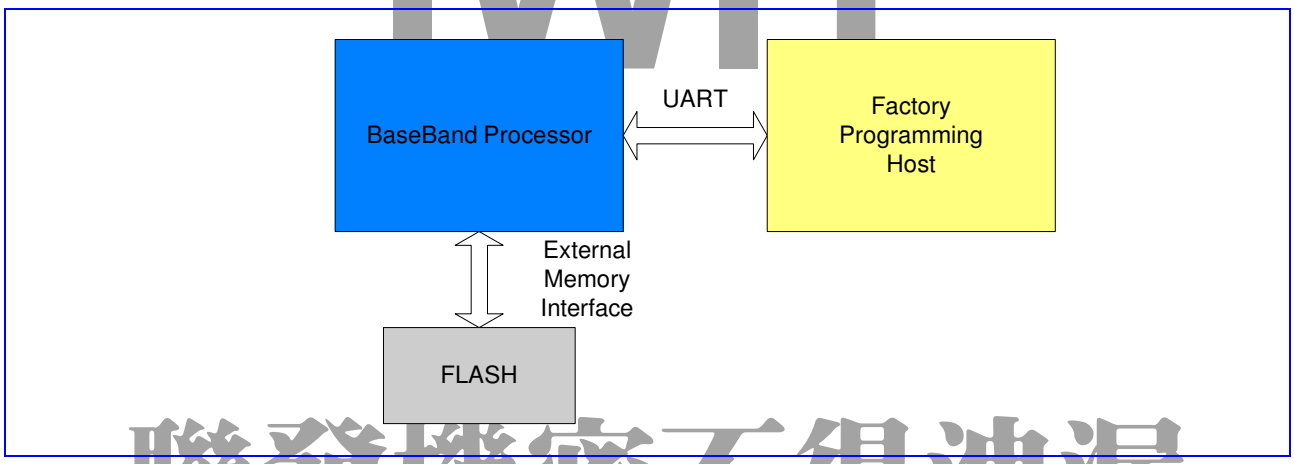

Figure 8 System configuration required for factory programming

3.2.1.3.3 NAND Flash Booting

If MT6225 cannot receive data from UART1 for a certain amount of time, the program in System ROM checks if any valid boot loader exists in NAND flash. If found, the boot loader code is copied from NAND flash to RAM (internal or external) and executed to start the real application software. If no valid boot loader can be found in NAND flash, MT6225 starts executing code in EMI bank0 memory. The whole boot sequence is shown in the following figure.

IWIT
聯發機密不得洩漏
MTK CONFIDENTIAL
NO DISCLOSURE
IWIT

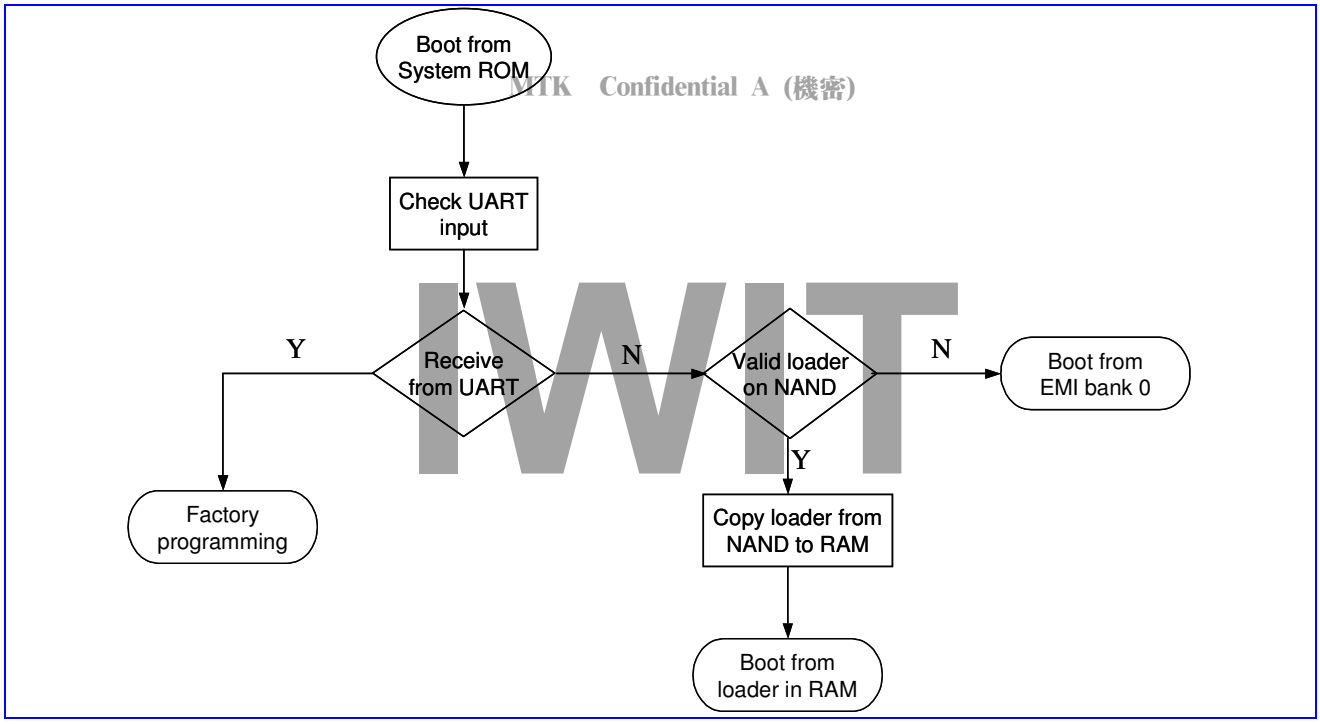

Figure 9 Boot sequence

3.2.1.4 Little Endian Mode

The MT6225 system always treats 32-bit words of memory in Little Endian format. In Little Endian mode, the lowest numbered byte in a word is stored in the least significant byte, and the highest numbered byte in the most significant position. Byte 0 of the memory system is therefore connected to data lines 7 through 0.

3.3 Bus System

3.3.1 General Description

Two levels of bus hierarchy are employed in constructing the Micro-Controller Unit Subsystem of MT6225. As depicted in **Figure 6**, AHB Bus and APB Bus serve for system backbone and peripheral buses, while an APB bridge connects these two buses. Both AHB and APB Buses operate at the same clock rate as processor core.

The APB Bridge is the only bus master resided on the APB bus. All APB slaves are mapped onto memory block MB8 in MCU 32-bit addressing space. A central address decoder is implemented inside the bridge to generate those select signals for individual peripheral. In addition, since the base address of each APB slave has been associated with select signals, the address bus on APB will contains only the value of offset address.

The maximum address space that can be allocated to a single APB slave is 64KB, i.e. 16-bit address lines. The width of data bus is mainly constrained to 16-bit to minimize the design complexity and power consumption while some of them uses 32-bit data bus to accommodate more bandwidth. In the case where an APB slave needs large amount of transfers, the device driver can also request a DMA resource or channel to conduct a burst of data transfer. The base address and data width of each peripheral are listed in **Table 5**.

Base Address	Description	Data Width	Software Base ID
8000_0000h	Configuration Registers (Clock, Power Down, Version and Reset)	16	CONFG Base
8001_0000h	External Memory Interface	32	EMI Base

MTK Confidential A (機密)
聯發機密不得洩漏
MTK CONFIDENTIAL
NO DISCLOSURE

MTK Confidential A (機密)

8002_0000h	Interrupt Controller	32	CIRQ Base
8003_0000h	DMA Controller	32	DMA Base
8004_0000h	Reset Generation Unit	16	RGU Base
8005_0000h	Reserved		
8006_0000h	GPRS Cipher Unit	32	GCU Base
8007_0000h	I2C	16	I2C Base
8008_0000h	Reserved		
8009_0000h	NAND Flash Interface	32	NFI base
8010_0000h	General Purpose Timer	16	GPT Base
8011_0000h	Keypad Scanner	16	KP Base
8012_0000h	General Purpose Inputs/Outputs	16	GPIO Base
8013_0000h	UART 1	16	UART1 Base
8014_0000h	SIM Interface	16	SIM Base
8015_0000h	Pulse-Width Modulation Outputs	16	PWM Base
8016_0000h	Alerter Interface	16	ALTER Base
8017_0000h	Security Engine for JTAG protection	32	SEJ Base
8018_0000h	UART 2	16	UART2 Base
8019_0000h	Reserved		
801a_0000h	IrDA	16	IRDA Base
801b_0000h	UART 3	16	UART3 Base
801c_0000h	Base-Band to PMIC Serial Interface	16	B2PSI Base
8020_0000h	TDMA Timer	32	TDMA Base
8021_0000h	Real Time Clock	16	RTC Base
8022_0000h	Base-Band Serial Interface	32	BSI Base
8023_0000h	Base-Band Parallel Interface	16	BPI Base
8024_0000h	Automatic Frequency Control Unit	16	AFC Base
8025_0000h	Automatic Power Control Unit	32	APC Base
8026_0000h	Frame Check Sequence	16	FCS Base
8027_0000h	Auxiliary ADC Unit	16	AUXADC Base
8028_0000h	Divider/Modulus Coprocessor	32	DIVIDER Base
8029_0000h	CSD Format Conversion Coprocessor	32	CSD_ACC Base
802a_0000h	MS/SD Controller	32	MSDC Base
8030_0000h	MCU-DSP Shared Register	16	SHARE Base
8031_0000h	DSP Patch Unit	16	PATCH Base
8032_0000h	IRDBG	16	IRDBG Base
8040_0000h	Audio Front End	16	AFE Base
8041_0000h	Base-Band Front End	16	BFE Base
8043_0000h	DigitalRF interface	32	DIGRF Base
8050_0000h	Analog Chip Interface Controller	16	MIXED Base
8060_0000h	Reserved		
8061_0000h	Resizer	32	RESZ Base
8062_0000h	Camera	32	CAM Base

Table 5 Register Base Addresses for MCU Peripherals

IWIT
嚴禁機密不得洩漏
MTK CONFIDENTIAL
NO DISCLOSURE
IWIT

REGISTER ADDRESS	REGISTER NAME	SYNONYM
CONFG + 0000h	Hardware Version Register	HW_VER
CONFG + 0004h	Software Version Register	SW_VER
CONFG + 0008h	Hardware Code Register	HW_CODE
CONFG + 0404h	APB Bus Control Register	APB_CON

Table 6 APB Bridge Register Map

MTK Confidential A (機密)

3.3.2 Register Definitions

CONFG+0000h Hardware Version Register HW_VERSION

Bit	15	14	13	12	11	10	9	8	7	6	5	4	3	2	1	0
Name	EXTP				MAJREV				MINREV							
Type	RO				RO				RO				RO			
Reset	8				A				0				0			

This register is used by software to determine the hardware version of the chip. The register contains a new value whenever each metal fix or major step is performed. All values are incremented by a step of 1.

MINREV Minor Revision of the chip

MAJREV Major Revision of the chip

EXTP This field shows the existence of Hardware Code Register that presents the Hardware ID while the value is other than zero.

聯發機密不得洩漏

CONFG+0004h Software Version Register SW_VERSION

Bit	15	14	13	12	11	10	9	8	7	6	5	4	3	2	1	0
Name	EXTP				MAJREV				MINREV							
Type	RO				RO				RO				RO			
Reset	8				A				0				0			

MTK CONFIDENTIAL

This register is used by software to determine the software version used with this chip. All values are incremented by a step of 1.

MINREV Minor Revision of the software

MAJREV Major Revision of the software

EXTP This field shows the existence of Hardware Code Register that presents the Hardware ID when the value is other than zero.

NO DISCLOSURE

CONFG+0008h Hardware Code Register HW_CODE

Bit	15	14	13	12	11	10	9	8	7	6	5	4	3	2	1	0
Name	CODE3				CODE2				CODE1				CODE0			
Type	RO				RO				RO				RO			
Reset	6				2				2				5			

This register presents the Hardware ID.

CODE This version of chip is coded as 6225h.

IWIT

CONFG+0404h **APB Bus Control Register** **APB_CON**

MTK Confidential A (機密)

Bit	15	14	13	12	11	10	9	8	7	6	5	4	3	2	1	0
Name		APBW6		APBW4	APBW3	APBW2	APBW1	APBW0		APBR6		APBR4	APBR3	APBR2	APBR1	APBR0
Type		R/W		R/W	R/W	R/W	R/W	R/W		R/W		R/W	R/W	R/W	R/W	R/W
Reset		0		0	0	0	0	0		1		1	1	1	1	1

This register is used to control the timing of Read Cycle and Write Cycle on APB Bus. Note that APB Bridge 5 is different from other bridges. The access time is varied, and access is not completed until acknowledge signal from APB slave is asserted.

APBR0-APBR6 Read Access Time on APB Bus

- **0** 1-Cycle Access
- **1** 2-Cycle Access

APBW0-APBW6 Write Access Time on APB Bus

- **0** 1-Cycle Access
- **1** 2-Cycle Access

3.4 Direct Memory Access

3.4.1 General Description

聯發機密不得洩漏

A generic DMA Controller is placed on Layer 2 AHB Bus to support fast data transfers and to off-load the processor. With this controller, specific devices on AHB or APB buses can benefit greatly from quick completion of data movement from or to memory modules such as Internal System RAM or External SRAM. Such Generic DMA Controller can also be used to connect any two devices other than memory module as long as they can be addressed in memory space.

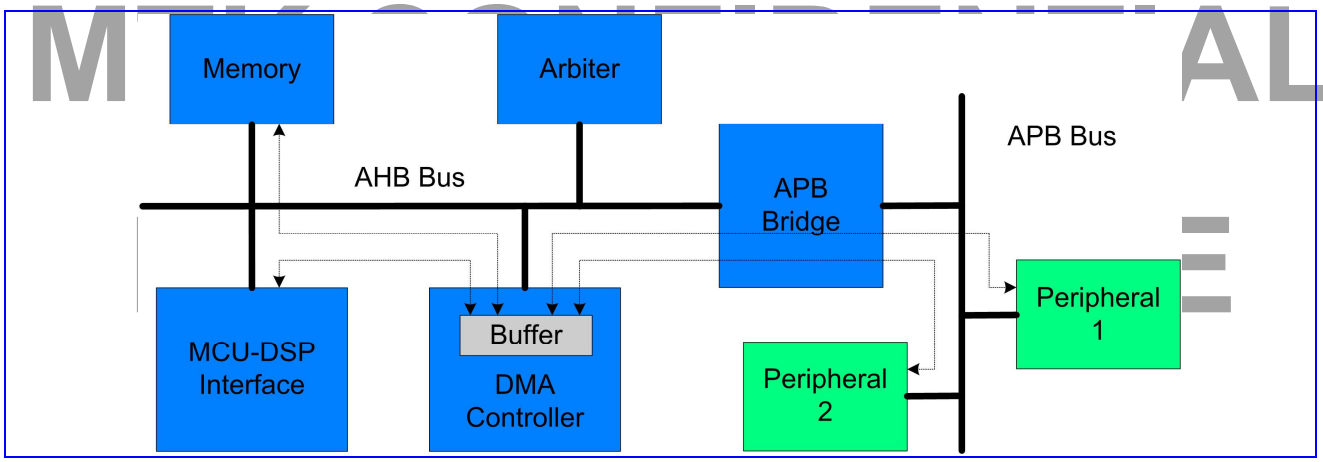

Figure 10 Variety Data Paths of DMA Transfers

Up to fourteen channels of simultaneous data transfers are supported. Each channel has a similar set of registers to be configured to different scheme as desired. If more than fourteen devices are requesting the DMA resources at the same time, software based arbitration should be employed. Once the service candidate is decided, the responsible device driver should configure the Generic DMA Controller properly in order to conduct DMA transfers. Both Interrupt and Polling based schemes in handling the completion event are supported. The block diagram of such generic DMA Controller is illustrated in **Figure 11**.

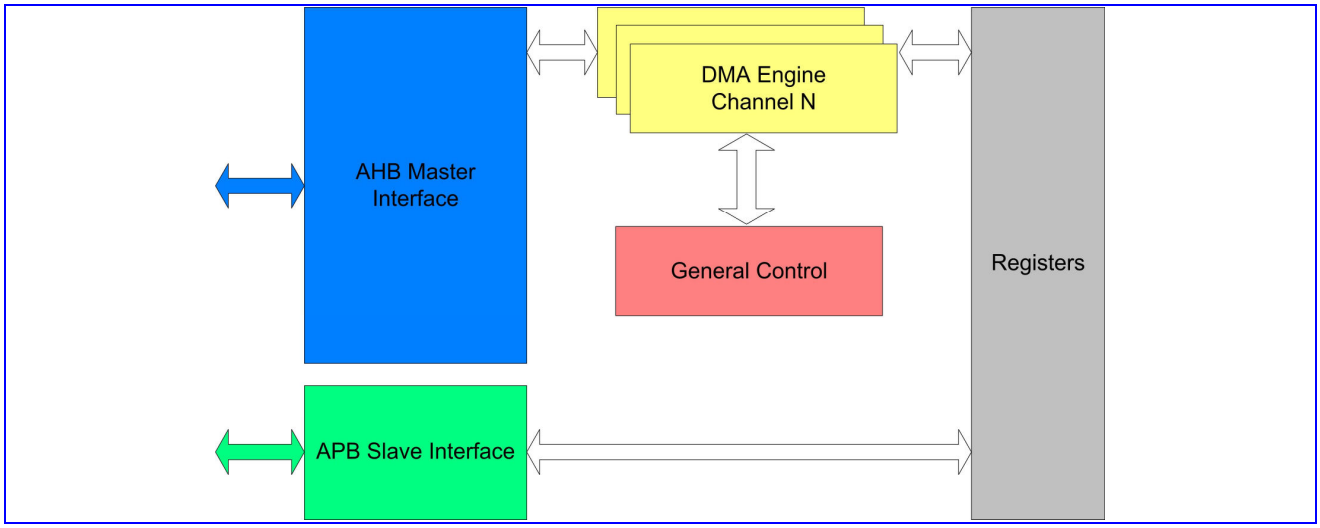

Figure 12 Block Diagram of Direct memory Access Module

3.4.1.1 Full-Size & Half-Size DMA Channels

There are three types of DMA channels in the DMA controller. The first one is called a full-size DMA channel, the second one is called a half-size DMA channel, and the last is Virtual FIFO DMA. Channels 1 through 3 are full-size DMA channels; channels 4 through 10 are half-size ones; and channels 11 through 14 are Virtual FIFO DMAs. The difference between the first two types of DMA channels is that both source and destination address are programmable in full-size DMA channels, but only the address of one side can be programmed in half-size DMA channel. In half-size channels, only either the source or destination address can be programmed, while the addresses of the other side is preset. Which preset address is used depends on the setting of MAS in DMA Channel Control Register. Refer to the Register Definition section for more detail.

聯發機密不得洩漏

3.4.1.2 Ring Buffer & Double Buffer Memory Data Movement

MTK CONFIDENTIAL

DMA channels 1 through 10 support ring-buffer and double-buffer memory data movement. This can be achieved by programming DMA_WPPT and DMA_WPTO, as well as setting WPEN in DMA_CON register to enable. **Figure 13** illustrates how this function works. Once the transfer counter reaches the value of WPPT, the next address jumps to the WPTO address after completing the WPPT data transfer. Note that only one side can be configured as ring-buffer or double-buffer memory, and this is controlled by WPSD in DMA_CON register.

NO DISCLOSURE

IWIT

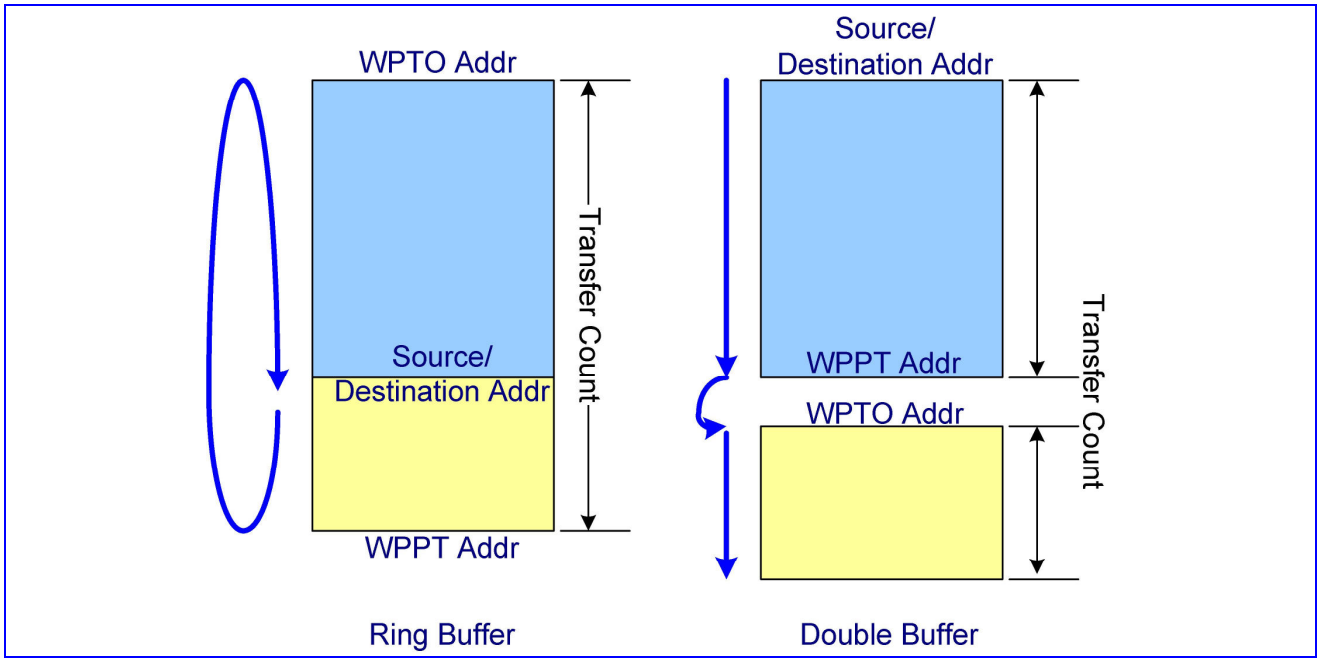

Figure 14 Ring Buffer and Double Buffer Memory Data Movement

3.4.1.3 Unaligned Word Access

The address of word access on AHB bus must be aligned to word boundary, or the 2 LSB is truncated to 00b. If programmers do not notice this, it may cause an incorrect data fetch. In the case where data is to be moved from unaligned addresses to aligned addresses, the word is usually first split into four bytes and then moved byte by byte. This results in four read and four write transfers on the bus.

聯發機密不得洩漏

To improve bus efficiency, unaligned-word access is provided in DMA4~10. While this function is enabled, DMAs move data from unaligned address to aligned address by executing four continuous byte-read access and one word-write access, reducing the number of transfers on the bus by three.

MTK CONFIDENTIAL

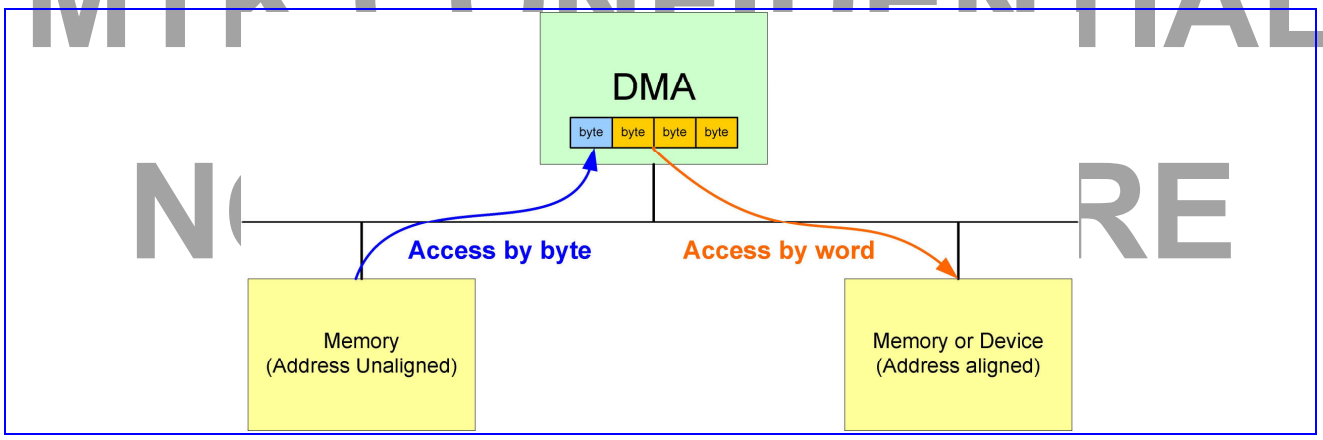

Figure 15 Unaligned Word Accesses

3.4.1.4 Virtual FIFO DMA

IWIT

Virtual FIFO DMA is used to ease UART control. The difference between the Virtual FIFO DMAs and the ordinary DMAs is that Virtual FIFO DMA contains additional FIFO controller. The read and write pointers are kept in the Virtual FIFO DMA. During a read from the FIFO, the read pointer points to the address of the next data. During a write to the FIFO, the write pointer moves to the next address. If the FIFO is empty, a FIFO read is not allowed. Similarly, data is not written into the FIFO if the FIFO is full. Due to UART flow control requirements, an alert

length is programmed. Once the FIFO Space is less than this value, an alert signal is issued to enable UART flow control. The type of flow control performed depends on the setting in UART.

MTK Confidential A (機密)

Each Virtual FIFO DMA can be programmed as RX or TX FIFO. This depends on the setting of DIR in DMA_CON register. If DIR is "0"(READ), it means TX FIFO. On the other hand, if DIR is "1"(WRITE), the Virtual FIFO DMA is specified as a RX FIFO.

Virtual FIFO DMA provides an interrupt to MCU. This interrupt informs MCU that there is data in the FIFO, and the amount of data is over or under the value defined in DMA_COUNT register. With this, MCU does not need to poll DMA to know when data must be removed from or put into the FIFO.

Note that Virtual FIFO DMAs cannot be used as generic DMAs, i.e. DMA1~10.

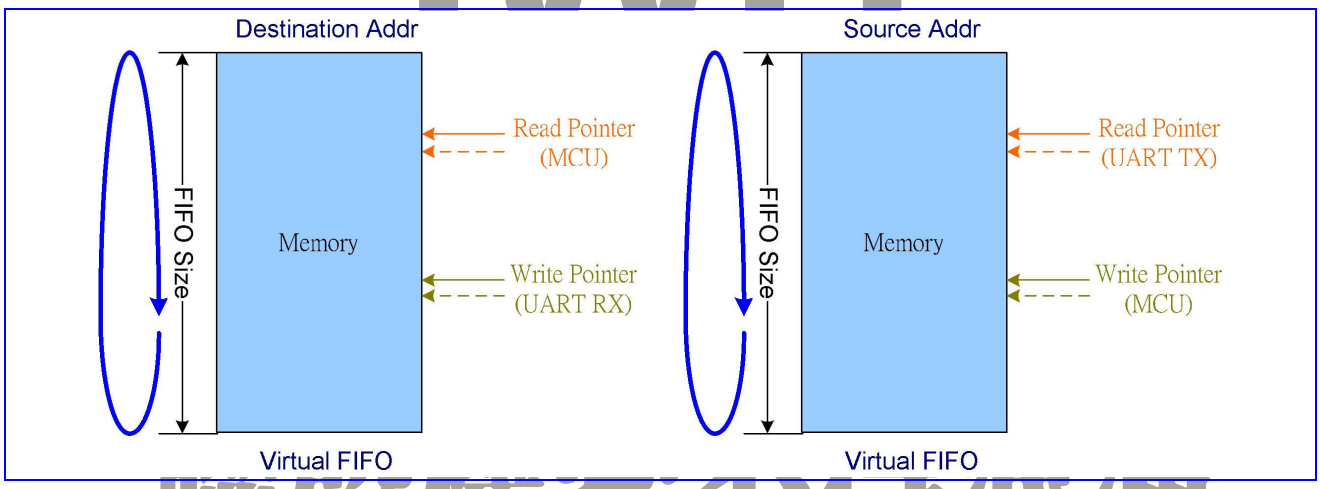

Figure 16 Virtual FIFO DMA

DMA number	Address of Virtual FIFO Access Port	Associated UART
DMA11	7800_0000h	UART1 RX / ALL UART TX
DMA12	7800_0100h	UART2 RX / ALL UART TX
DMA13	7800_0200h	UART3 RX / ALL UART TX
DMA14	7800_0300h	ALL UART TX

Table 7 Virtual FIFO Access Port

DMA number	Type	Ring Buffer	Two Buffer	Burst Mode	Unaligned Word Access
DMA1	Full Size	•	•	•	
DMA2	Full Size	•	•	•	
DMA3	Full Size	•	•	•	
DMA4	Half Size	•	•	•	•
DMA5	Half Size	•	•	•	•
DMA6	Half Size	•	•	•	•
DMA7	Half Size	•	•	•	•
DMA8	Half Size	•	•	•	•
DMA9	Half Size	•	•	•	•
DMA10	Half Size	•	•	•	•
DMA11	Virtual FIFO	•			
DMA12	Virtual FIFO	•			

IWIT
研發機密不得洩漏
MTK CONFIDENTIAL
NO DISCLOSURE
IWIT

DMA13	Virtual FIFO	●			
DMA14	Virtual FIFO	●			

MTK Confidential A (機密)

Table 8 Function List of DMA channels

REGISTER ADDRESS	REGISTER NAME	SYNONYM
DMA + 0000h	DMA Global Status Register	DMA_GLBSTA
DMA + 0028h	DMA Global Bandwidth Limiter Register	DMA_GLBLIMITER
DMA + 0100h	DMA Channel 1 Source Address Register	DMA1_SRC
DMA + 0104h	DMA Channel 1 Destination Address Register	DMA1_DST
DMA + 0108h	DMA Channel 1 Wrap Point Address Register	DMA1_WPPT
DMA + 010Ch	DMA Channel 1 Wrap To Address Register	DMA1_WPTO
DMA + 0110h	DMA Channel 1 Transfer Count Register	DMA1_COUNT
DMA + 0114h	DMA Channel 1 Control Register	DMA1_CON
DMA + 0118h	DMA Channel 1 Start Register	DMA1_START
DMA + 011Ch	DMA Channel 1 Interrupt Status Register	DMA1_INTSTA
DMA + 0120h	DMA Channel 1 Interrupt Acknowledge Register	DMA1_ACKINT
DMA + 0124h	DMA Channel 1 Remaining Length of Current Transfer	DMA1_RLCT
DMA + 0128h	DMA Channel 1 Bandwidth Limiter Register	DMA1_LIMITER
DMA + 0200h	DMA Channel 2 Source Address Register	DMA2_SRC
DMA + 0204h	DMA Channel 2 Destination Address Register	DMA2_DST
DMA + 0208h	DMA Channel 2 Wrap Point Address Register	DMA2_WPPT
DMA + 020Ch	DMA Channel 2 Wrap To Address Register	DMA2_WPTO
DMA + 0210h	DMA Channel 2 Transfer Count Register	DMA2_COUNT
DMA + 0214h	DMA Channel 2 Control Register	DMA2_CON
DMA + 0218h	DMA Channel 2 Start Register	DMA2_START
DMA + 021Ch	DMA Channel 2 Interrupt Status Register	DMA2_INTSTA
DMA + 0220h	DMA Channel 2 Interrupt Acknowledge Register	DMA2_ACKINT
DMA + 0224h	DMA Channel 2 Remaining Length of Current Transfer	DMA2_RLCT
DMA + 0228h	DMA Channel 2 Bandwidth Limiter Register	DMA2_LIMITER
DMA + 0300h	DMA Channel 3 Source Address Register	DMA3_SRC
DMA + 0304h	DMA Channel 3 Destination Address Register	DMA3_DST
DMA + 0308h	DMA Channel 3 Wrap Point Address Register	DMA3_WPPT
DMA + 030Ch	DMA Channel 3 Wrap To Address Register	DMA3_WPTO
DMA + 0310h	DMA Channel 3 Transfer Count Register	DMA3_COUNT
DMA + 0314h	DMA Channel 3 Control Register	DMA3_CON
DMA + 0318h	DMA Channel 3 Start Register	DMA3_START
DMA + 031Ch	DMA Channel 3 Interrupt Status Register	DMA3_INTSTA
DMA + 0320h	DMA Channel 3 Interrupt Acknowledge Register	DMA3_ACKINT
DMA + 0324h	DMA Channel 3 Remaining Length of Current Transfer	DMA3_RLCT
DMA + 0328h	DMA Channel 3 Bandwidth Limiter Register	DMA3_LIMITER
DMA + 0408h	DMA Channel 4 Wrap Point Address Register	DMA4_WPPT
DMA + 040Ch	DMA Channel 4 Wrap To Address Register	DMA4_WPTO
DMA + 0410h	DMA Channel 4 Transfer Count Register	DMA4_COUNT

MTK CONFIDENTIAL
NO DISCLOSURE
聯發科技機密 不得洩漏

DMA + 0414h	DMA Channel 4 Control Register	DMA4_CON
DMA + 0418h	DMA Channel 4 Start Register	DMA4_START
DMA + 041Ch	DMA Channel 4 Interrupt Status Register	DMA4_INTSTA
DMA + 0420h	DMA Channel 4 Interrupt Acknowledge Register	DMA4_ACKINT
DMA + 0424h	DMA Channel 4 Remaining Length of Current Transfer	DMA4_RLCT
DMA + 0428h	DMA Channel 4 Bandwidth Limiter Register	DMA4_LIMITER
DMA + 042Ch	DMA Channel 4 Programmable Address Register	DMA4_PGMADDR
DMA + 0508h	DMA Channel 5 Wrap Point Address Register	DMA5_WPPT
DMA + 050Ch	DMA Channel 5 Wrap To Address Register	DMA5_WPTO
DMA + 0510h	DMA Channel 5 Transfer Count Register	DMA5_COUNT
DMA + 0514h	DMA Channel 5 Control Register	DMA5_CON
DMA + 0518h	DMA Channel 5 Start Register	DMA5_START
DMA + 051Ch	DMA Channel 5 Interrupt Status Register	DMA5_INTSTA
DMA + 0520h	DMA Channel 5 Interrupt Acknowledge Register	DMA5_ACKINT
DMA + 0524h	DMA Channel 5 Remaining Length of Current Transfer	DMA5_RLCT
DMA + 0528h	DMA Channel 5 Bandwidth Limiter Register	DMA5_LIMITER
DMA + 052Ch	DMA Channel 5 Programmable Address Register	DMA5_PGMADDR
DMA + 0608h	DMA Channel 6 Wrap Point Address Register	DMA6_WPPT
DMA + 060Ch	DMA Channel 6 Wrap To Address Register	DMA6_WPTO
DMA + 0610h	DMA Channel 6 Transfer Count Register	DMA6_COUNT
DMA + 0614h	DMA Channel 6 Control Register	DMA6_CON
DMA + 0618h	DMA Channel 6 Start Register	DMA6_START
DMA + 061Ch	DMA Channel 6 Interrupt Status Register	DMA6_INTSTA
DMA + 0620h	DMA Channel 6 Interrupt Acknowledge Register	DMA6_ACKINT
DMA + 0624h	DMA Channel 6 Remaining Length of Current Transfer	DMA6_RLCT
DMA + 0628h	DMA Channel 6 Bandwidth Limiter Register	DMA6_LIMITER
DMA + 062Ch	DMA Channel 6 Programmable Address Register	DMA6_PGMADDR
DMA + 0708h	DMA Channel 7 Wrap Point Address Register	DMA7_WPPT
DMA + 070Ch	DMA Channel 7 Wrap To Address Register	DMA7_WPTO
DMA + 0710h	DMA Channel 7 Transfer Count Register	DMA7_COUNT
DMA + 0714h	DMA Channel 7 Control Register	DMA7_CON
DMA + 0718h	DMA Channel 7 Start Register	DMA7_START
DMA + 071Ch	DMA Channel 7 Interrupt Status Register	DMA7_INTSTA
DMA + 0720h	DMA Channel 7 Interrupt Acknowledge Register	DMA7_ACKINT
DMA + 0724h	DMA Channel 7 Remaining Length of Current Transfer	DMA7_RLCT
DMA + 0728h	DMA Channel 7 Bandwidth Limiter Register	DMA7_LIMITER
DMA + 072Ch	DMA Channel 7 Programmable Address Register	DMA7_PGMADDR
DMA + 0808h	DMA Channel 8 Wrap Point Address Register	DMA8_WPPT
DMA + 080Ch	DMA Channel 8 Wrap To Address Register	DMA8_WPTO
DMA + 0810h	DMA Channel 8 Transfer Count Register	DMA8_COUNT
DMA + 0814h	DMA Channel 8 Control Register	DMA8_CON
DMA + 0818h	DMA Channel 8 Start Register	DMA8_START
DMA + 081Ch	DMA Channel 8 Interrupt Status Register	DMA8_INTSTA

MTK Confidential A (機密)
MTK CONFIDENTIAL
NO DISCLOSURE

MTK Confidential A (機密)

DMA + 0820h	DMA Channel 8 Interrupt Acknowledge Register	DMA8_ACKINT
DMA + 0824h	DMA Channel 8 Remaining Length of Current Transfer	DMA8_RLCT
DMA + 0828h	DMA Channel 8 Bandwidth Limiter Register	DMA8_LIMITER
DMA + 082Ch	DMA Channel 8 Programmable Address Register	DMA8_PGMADDR
DMA + 0908h	DMA Channel 9 Wrap Point Address Register	DMA9_WPPT
DMA + 090Ch	DMA Channel 9 Wrap To Address Register	DMA9_WPTO
DMA + 0910h	DMA Channel 9 Transfer Count Register	DMA9_COUNT
DMA + 0914h	DMA Channel 9 Control Register	DMA9_CON
DMA + 0918h	DMA Channel 9 Start Register	DMA9_START
DMA + 091Ch	DMA Channel 9 Interrupt Status Register	DMA9_INTSTA
DMA + 0920h	DMA Channel 9 Interrupt Acknowledge Register	DMA9_ACKINT
DMA + 0924h	DMA Channel 9 Remaining Length of Current Transfer	DMA9_RLCT
DMA + 0928h	DMA Channel 9 Bandwidth Limiter Register	DMA9_LIMITER
DMA + 092Ch	DMA Channel 9 Programmable Address Register	DMA9_PGMADDR
DMA + 0A08h	DMA Channel 10 Wrap Point Address Register	DMA10_WPPT
DMA + 0A0Ch	DMA Channel 10 Wrap To Address Register	DMA10_WPTO
DMA + 0A10h	DMA Channel 10 Transfer Count Register	DMA10_COUNT
DMA + 0A14h	DMA Channel 10 Control Register	DMA10_CON
DMA + 0A18h	DMA Channel 10 Start Register	DMA10_START
DMA + 0A1Ch	DMA Channel 10 Interrupt Status Register	DMA10_INTSTA
DMA + 0A20h	DMA Channel 10 Interrupt Acknowledge Register	DMA10_ACKINT
DMA + 0A24h	DMA Channel 10 Remaining Length of Current Transfer	DMA10_RLCT
DMA + 0A28h	DMA Channel 10 Bandwidth Limiter Register	DMA10_LIMITER
DMA + 0A2Ch	DMA Channel 10 Programmable Address Register	DMA10_PGMADDR
DMA + 0B10h	DMA Channel 11 Transfer Count Register	DMA11_COUNT
DMA + 0B14h	DMA Channel 11 Control Register	DMA11_CON
DMA + 0B18h	DMA Channel 11 Start Register	DMA11_START
DMA + 0B1Ch	DMA Channel 11 Interrupt Status Register	DMA11_INTSTA
DMA + 0B20h	DMA Channel 11 Interrupt Acknowledge Register	DMA11_ACKINT
DMA + 0B28h	DMA Channel 11 Bandwidth Limiter Register	DMA11_LIMITER
DMA + 0B2Ch	DMA Channel 11 Programmable Address Register	DMA11_PGMADDR
DMA + 0B30h	DMA Channel 11 Write Pointer	DMA11_WRPTR
DMA + 0B34h	DMA Channel 11 Read Pointer	DMA11_RDPTR
DMA + 0B38h	DMA Channel 11 FIFO Count	DMA11_FFCNT
DMA + 0B3Ch	DMA Channel 11 FIFO Status	DMA11_FFSTA
DMA + 0B40h	DMA Channel 11 Alert Length	DMA11_ALTLEN
DMA + 0B44h	DMA Channel 11 FIFO Size	DMA11_FFSIZE
DMA + 0C10h	DMA Channel 12 Transfer Count Register	DMA12_COUNT
DMA + 0C14h	DMA Channel 12 Control Register	DMA12_CON
DMA + 0C18h	DMA Channel 12 Start Register	DMA12_START
DMA + 0C1Ch	DMA Channel 12 Interrupt Status Register	DMA12_INTSTA
DMA + 0C20h	DMA Channel 12 Interrupt Acknowledge Register	DMA12_ACKINT

聯發機密 不得洩漏
MTK CONFIDENTIAL
NO DISCLOSURE

DMA + 0C28h	DMA Channel 12 Bandwidth Limiter Register	DMA12_LIMITER
DMA + 0C2Ch	DMA Channel 12 Programmable Address Register	DMA12_PGMADDR
DMA + 0C30h	DMA Channel 12 Write Pointer	DMA12_WRPTR
DMA + 0C34h	DMA Channel 12 Read Pointer	DMA12_RDPTR
DMA + 0C38h	DMA Channel 12 FIFO Count	DMA12_FFCNT
DMA + 0C3Ch	DMA Channel 12 FIFO Status	DMA12_FFSTA
DMA + 0C40h	DMA Channel 12 Alert Length	DMA12_ALTLEN
DMA + 0C44h	DMA Channel 12 FIFO Size	DMA12_FFSIZE
DMA + 0D10h	DMA Channel 13 Transfer Count Register	DMA13_COUNT
DMA + 0D14h	DMA Channel 13 Control Register	DMA13_CON
DMA + 0D18h	DMA Channel 13 Start Register	DMA13_START
DMA + 0D1Ch	DMA Channel 13 Interrupt Status Register	DMA13_INTSTA
DMA + 0D20h	DMA Channel 13 Interrupt Acknowledge Register	DMA13_ACKINT
DMA + 0D28h	DMA Channel 13 Bandwidth Limiter Register	DMA13_LIMITER
DMA + 0D2Ch	DMA Channel 13 Programmable Address Register	DMA13_PGMADDR
DMA + 0D30h	DMA Channel 13 Write Pointer	DMA13_WRPTR
DMA + 0D34h	DMA Channel 13 Read Pointer	DMA13_RDPTR
DMA + 0D38h	DMA Channel 13 FIFO Count	DMA13_FFCNT
DMA + 0D3Ch	DMA Channel 13 FIFO Status	DMA13_FFSTA
DMA + 0D40h	DMA Channel 13 Alert Length	DMA13_ALTLEN
DMA + 0D44h	DMA Channel 13 FIFO Size	DMA13_FFSIZE
DMA + 0E10h	DMA Channel 14 Transfer Count Register	DMA14_COUNT
DMA + 0E14h	DMA Channel 14 Control Register	DMA14_CON
DMA + 0E18h	DMA Channel 14 Start Register	DMA14_START
DMA + 0E1Ch	DMA Channel 14 Interrupt Status Register	DMA14_INTSTA
DMA + 0E20h	DMA Channel 14 Interrupt Acknowledge Register	DMA14_ACKINT
DMA + 0E28h	DMA Channel 14 Bandwidth Limiter Register	DMA14_LIMITER
DMA + 0E2Ch	DMA Channel 14 Programmable Address Register	DMA14_PGMADDR
DMA + 0E30h	DMA Channel 14 Write Pointer	DMA14_WRPTR
DMA + 0E34h	DMA Channel 14 Read Pointer	DMA14_RDPTR
DMA + 0E38h	DMA Channel 14 FIFO Count	DMA14_FFCNT
DMA + 0E3Ch	DMA Channel 14 FIFO Status	DMA14_FFSTA
DMA + 0E40h	DMA Channel 14 Alert Length	DMA14_ALTLEN
DMA + 0E44h	DMA Channel 14 FIFO Size	DMA14_FFSIZE

Table 9 DMA Controller Register Map

3.4.2 Register Definitions

Register programming tips:

- Start registers shall be cleared, when associated channels are being programmed.
- PGMADDR, i.e. programmable address, only exists in half-size DMA channels. If DIR in Control Register is high, PGMADDR represents Destination Address. Conversely, If DIR in Control Register is low, PGMADDR represents Source Address.

MTK Confidential A (機密)
IWIT
嚴發機密不得洩漏
MTK CONFIDENTIAL
NO DISCLOSURE
IWIT

- Functions of ring-buffer and double-buffer memory data movement can be activated on either source side or destination side by programming DMA_WPPT & and DMA_WPTO, as well as setting WPEN in DMA_CON register high. WPSD in DMA_CON register determines the activated side.

MTK Confidential A (機密)

DMA+0000h DMA Global Status Register DMA_GLBSTA

Bit	31	30	29	28	27	26	25	24	23	22	21	20	19	18	17	16
Name					IT14	RUN14	IT13	RUN13	IT12	RUN12	IT11	RUN11	IT10	RUN10	IT9	RUN9
Type					RO	RO	RO	RO	RO	RO	RO	RO	RO	RO	RO	RO
Reset					0	0	0	0	0	0	0	0	0	0	0	0
Bit	15	14	13	12	11	10	9	8	7	6	5	4	3	2	1	0
Name	IT8	RUN8	IT7	RUN7	IT6	RUN6	IT5	RUN5	IT4	RUN4	IT3	RUN3	IT2	RUN2	IT1	RUN1
Type	RO	RO	RO	RO	RO	RO	RO	RO	RO	RO	RO	RO	RO	RO	RO	RO
Reset	0	0	0	0	0	0	0	0	0	0	0	0	0	0	0	0

This register helps software program keep track of the global status of DMA channels.

RUN_N DMA channel n status

- **0** Channel n is stopped or has completed the transfer already.
- **1** Channel n is currently running.

IT_N Interrupt status for channel n

- **0** No interrupt is generated.
- **1** An interrupt is pending and waiting for service.

DMA+0028h DMA Global Bandwidth limiter Register DMA_GLBLIMITER

Bit	31	30	29	28	27	26	25	24	23	22	21	20	19	18	17	16
Name																
Type																
Reset																
Bit	15	14	13	12	11	10	9	8	7	6	5	4	3	2	1	0
Name									GLBLIMITER							
Type									WO							
Reset									0							

Please refer to the expression in DMAn_LIMITER for detailed note. The value of DMA_GLBLIMITER is set to all DMA channels, from 1 to 14.

DMA+0n00h DMA Channel n Source Address Register DMAn_SRC

Bit	31	30	29	28	27	26	25	24	23	22	21	20	19	18	17	16
Name	SRC[31:16]															
Type	R/W															
Reset	0															
Bit	15	14	13	12	11	10	9	8	7	6	5	4	3	2	1	0
Name	SRC[15:0]															
Type	R/W															
Reset	0															

The above registers contain the base or current source address that the DMA channel is currently operating on. Writing to this register specifies the base address of transfer source for a DMA channel. Before programming these registers, the software program should make sure that STR in DMAn_START is set to 0; that is, the DMA channel is stopped and disabled completely. Otherwise, the DMA channel may run out of order. Reading this register returns the address value from which the DMA is reading.

Note that n is from 1 to 3.

SRC **SRC**[31:0] specifies the base or current address of transfer source for a DMA channel, i.e. channel 1, 2 or 3.

MTK CONFIDENTIAL NO DISCLOSURE

WRITE Base address of transfer source

READ Address from which DMA is reading

MTK Confidential A (機密)

DMA+0n04h DMA Channel n Destination Address Register DMAn_DST

Bit	31	30	29	28	27	26	25	24	23	22	21	20	19	18	17	16
Name	DST[31:16]															
Type	R/W															
Reset	0															
Bit	15	14	13	12	11	10	9	8	7	6	5	4	3	2	1	0
Name	DST[15:0]															
Type	R/W															
Reset	0															

The above registers contain the base or current destination address that the DMA channel is currently operating on.. Writing to this register specifies the base address of the transfer destination for a DMA channel. Before programming these registers, the software should make sure that STR in DMAn_START is set to '0'; that is, the DMA channel is stopped and disabled completely. Otherwise, the DMA channel may run out of order. Reading this register returns the address value to which the DMA is writing.

Note that n is from 1 to 3.

DST **DST**[31:0] specifies the base or current address of transfer destination for a DMA channel, i.e. channel 1, 2 or 3.

WRITE Base address of transfer destination.

READ Address to which DMA is writing.

聯發機密不得洩漏

DMA+0n08h DMA Channel n Wrap Point Count Register DMAn_WPPT

Bit	31	30	29	28	27	26	25	24	23	22	21	20	19	18	17	16
Name																
Type																
Reset																
Bit	15	14	13	12	11	10	9	8	7	6	5	4	3	2	1	0
Name	WPPT[15:0]															
Type	R/W															
Reset	0															

MTK CONFIDENTIAL

The above registers are to specify the transfer count required to perform before the jump point. This can be used to support ring buffer or double buffer style memory accesses. To enable this function, two control bits, WPEN and WPSD, in DMA control register must be programmed. See the following register description for more details. If the transfercounter in the DMA engine matches this value, an address jump occurs, and the next address is the address specified in DMAn_WPTO. Before programming these registers, the software should make sure that STR in DMAn_START is set to '0', that is the DMA channel is stopped and disabled completely. Otherwise, the DMA channel may run out of order. To enable this function, WPEN in DMA_CON is set.

NO DISCLOSURE

Note that n is from 1 to 10.

WPPT **WPPT**[15:0] specifies the amount of the transfer count from start to jumping point for a DMA channel, i.e. channel 1 – 10.

WRITE Address of the jump point.

READ Value set by the programmer.

DMA+0n0Ch DMA Channel n Wrap To Address Register DMAn_WPTO

Bit	31	30	29	28	27	26	25	24	23	22	21	20	19	18	17	16
Name	WPTO[31:16]															
Type	R/W															
Reset	0															

Bit	15	14	13	12	11	10	9	8	7	6	5	4	3	2	1	0
Name	WPTO[15:0]															
Type	R/W															
Reset	0															

MTK Confidential A (機密)

The above registers specify the address of the jump destination of a given DMA transfer to support ring buffer or double buffer style memory accesses. To enable this function, set the two control bits, WPEN and WPSD, in the DMA control register . See the following register description for more details. Before programming these registers, the software should make sure that STR in DMAn_START is set to '0', that is the DMA channel is stopped and disabled completely. Otherwise, the DMA channel may run out of order. To enable this function, WPEN in DMA_CON should be set.

Note that n is from 1 to 10.

WPTO **WPTO**[31:0] specifies the address of the jump point for a DMA channel, i.e. channel 1 – 10.

WRITE Address of the jump destination.

READ Value set by the programmer.

DMA+0n10h DMA Channel n Transfer Count Register DMAn_COUNT

Bit	31	30	29	28	27	26	25	24	23	22	21	20	19	18	17	16
Name																
Type																
Reset																
Bit	15	14	13	12	11	10	9	8	7	6	5	4	3	2	1	0
Name	LEN															
Type	R/W															
Reset	0															

聯發機密不得洩漏

This register specifies the amount of total transfer count that the DMA channel is required to perform. Upon completion, the DMA channel generates an interrupt request to the processor while ITEN in DMAn_CON is set as '1'. Note that the total size of data being transferred by a DMA channel is determined by LEN together with the SIZE in DMAn_CON, i.e. LEN x SIZE.

MTK CONFIDENTIAL

For virtual FIFO DMA, this register is used to configure the RX threshold and TX threshold. Interrupt is triggered while FIFO count >= RX threshold in RX path or FIFO count =< TX threshold in TX path. Note that ITEN bit in DMA_CON register shall be set, or no interrupt is issued.

Note that n is from 1 to 14.

LEN The amount of total transfer count

NO DISCLOSURE

DMA+0n14h DMA Channel n Control Register DMAn_CON

Bit	31	30	29	28	27	26	25	24	23	22	21	20	19	18	17	16
Name								MAS						DIR	WPEN	WPSD
Type								R/W						R/W	R/W	R/W
Reset								0						0	0	0
Bit	15	14	13	12	11	10	9	8	7	6	5	4	3	2	1	0
Name	ITEN					BURST					B2W	DRQ	DINC	SINC	SIZE	
Type	R/W					R/W					R/W	R/W	R/W	R/W	R/W	
Reset	0					0					0	0	0	0	0	

This register contains all the available control schemes for a DMA channel that is ready for software programmer to configure. Note that all these fields cannot be changed while DMA transfer is in progress or an unexpected situation may occur.

Note that n is from 1 to 14.

SIZE Data size within the confine of a bus cycle per transfer.

These bits confines the data transfer size between source and destination to the specified value for individual bus cycle. The size is in terms of byte and has maximum value of 4 bytes. It is mainly decided by the data width of a DMA master.

MTK Confidential A (機密)

00 Byte transfer/1 byte
01 Half-word transfer/2 bytes
10 Word transfer/4 bytes
11 Reserved

SINC Incremental source address. Source addresses increase every transfer. If the setting of SIZE is Byte, Source addresses increase by 1 every single transfer. If Half-Word, increase by 2; and if Word, increase by 4.
0 Disable
1 Enable

DINC Incremental destination address. Destination addresses increase every transfer. If the setting of SIZE is Byte, Destination addresses increase by 1 every single transfer. If Half-Word, increase by 2; and Iif Word, increase by 4.
0 Disable
1 Enable

DREQ Throttle and handshake control for DMA transfer
0 No throttle control during DMA transfer or transfers occurred only between memories
1 Hardware handshake management
The DMA master is able to throttle down the transfer rate by way of request-grant handshake.

B2W Word to Byte or Byte to Word transfer for the applications of transferring non-word-aligned-address data to word-aligned-address data. Note that BURST is set to 4-beat burst while enabling this function, and the SIZE is set to Byte.
NO effect on channel 1 – 3 & 11 - 14.
0 Disable
1 Enable

BURST Transfer Type. Burst-type transfers have better bus efficiency. Mass data movement is recommended to use this kind of transfer. However, note that burst-type transfer does not stop until all of the beats in a burst are completed or transfer length is reached. FIFO threshold of peripherals must be configured carefully while being used to move data from/to the peripherals.
What transfer type can be used is restricted by the SIZE. If SIZE is 00b, i.e. byte transfer, all of the four transfer types can be used. If SIZE is 01b, i.e. half-word transfer, 16-beat incrementing burst cannot be used. If SIZE is 10b, i.e. word transfer, only single and 4-beat incrementing burst can be used.
NO effect on channel 11 - 14.
000 Single
001 Reserved
010 4-beat incrementing burst
011 Reserved
100 8-beat incrementing burst
101 Reserved
110 16-beat incrementing burst
111 Reserved

ITEN DMA transfer completion interrupt enable.
0 Disable
1 Enable

WPSD The side using address-wrapping function. Only one side of a DMA channel can activate address-wrapping function at a time.
NO effect on channel 11 - 14.

IWIT
聯發機密不得洩漏
MTK CONFIDENTIAL
NO DISCLOSURE
IWIT

0 Address-wrapping on source .

1 Address-wrapping on destination.

MTK Confidential A (機密)

WPEN Address-wrapping for ring buffer. The next address of DMA jumps to WRAP TO address when the current address matches WRAP POINT count.

NO effect on channel 11 - 14.

0 Disable

1 Enable

DIR Directions of DMA transfer for half-size and Virtual FIFO DMA channels, i.e. channels 4~14. The direction is from the perspective of the DMA masters. WRITE means read from master and then write to the address specified in DMA_PGMADDR, and vice versa.

NO effect on channel 1 - 3.

0 Read

1 Write

MAS Master selection. Specifies which master occupies this DMA channel. Once assigned to certain master, the corresponding DREQ and DACK are connected. For half-size and Virtual FIFO DMA channels, i.e. channels 4 ~ 14, a predefined address is assigned as well.

00000 SIM

00001 MSDC

00010 IrDA TX

00011 IrDA RX

00100 USB1 Write

00101 USB1 Read

00110 USB2 Write

00111 USB2 Read

01000 UART1 TX

01001 UART1 RX

01010 UART2 TX

01011 UART2 RX

01100 UART3 TX

01101 UART3 RX

01110 DSP-DMA

01111 NFI TX

10000 NFI RX

10001 I2C TX

10010 I2C RX

OTHERS Reserved

IWIT
聯發機密不得洩漏
MTK CONFIDENTIAL
NO DISCLOSURE

DMA+0n18h DMA Channel n Start Register DMAn_START

Bit	31	30	29	28	27	26	25	24	23	22	21	20	19	18	17	16
Name																
Type																
Reset																
Bit	15	14	13	12	11	10	9	8	7	6	5	4	3	2	1	0
Name	STR															
Type	R/W															
Reset	0															

This register controls the activity of a DMA channel. Note that prior to setting STR to “1”, all the configurations should be done by giving proper value to the registers. Note also that once the STR is set to “1”, the hardware does not clear it automatically no matter if the DMA channel accomplishes the DMA transfer or not. In other works, the

value of **STR** stays "1" regardless of the completion of DMA transfer. Therefore, the software program should be sure to clear **STR** to "0" before restarting another DMA transfer.

MTK Confidential A (機密)

Note that n is from 1 to 14.

STR Start control for a DMA channel.

- **0** The DMA channel is stopped.
- **1** The DMA channel is started and running.

DMA+0n1Ch DMA Channel n Interrupt Status Register DMAn_INTSTA

Bit	31	30	29	28	27	26	25	24	23	22	21	20	19	18	17	16
Name																
Type																
Reset																
Bit	15	14	13	12	11	10	9	8	7	6	5	4	3	2	1	0
Name	**INT**															
Type	RO															
Reset	0															

This register shows the interrupt status of a DMA channel. It has the same value as DMA_GLBSTA.

Note that n is from 1 to 14.

INT Interrupt Status for DMA Channel

- **0** No interrupt request is generated.
- **1** One interrupt request is pending and waiting for service.

聯發機密不得洩漏

DMA+0n20h DMA Channel n Interrupt Acknowledge Register DMAn_ACKINT

Bit	31	30	29	28	27	26	25	24	23	22	21	20	19	18	17	16
Name																
Type																
Reset																
Bit	15	14	13	12	11	10	9	8	7	6	5	4	3	2	1	0
Name	**ACK**															
Type	WO															
Reset	0															

This register is used to acknowledge the current interrupt request associated with the completion event of a DMA channel by software program. Note that this is a write-only register, and any read to it returns a value of "0".

Note that n is from 1 to 14.

NO DISCLOSURE

ACK Interrupt acknowledge for the DMA channel

- **0** No effect
- **1** Interrupt request is acknowledged and should be relinquished.

DMA+0n24h DMA Channel n Remaining Length of Current Transfer DMAn_RLCT

Bit	31	30	29	28	27	26	25	24	23	22	21	20	19	18	17	16
Name																
Type																
Reset																
Bit	15	14	13	12	11	10	9	8	7	6	5	4	3	2	1	0
Name	**RLCT**															
Type	RO															
Reset	0															

This register is to reflect the left amount of the transfer.

Note that n is from 1 to 10.

DMA+0n28h DMA Bandwidth limiter Register DMAn_LIMITER

Bit	31	30	29	28	27	26	25	24	23	22	21	20	19	18	17	16
Name																
Type																
Reset																
Bit	15	14	13	12	11	10	9	8	7	6	5	4	3	2	1	0
Name									LIMITER							
Type									R/W							
Reset									0							

This register is to suppress the Bus utilization of the DMA channel. The value is from 0 to 255. 0 means no limitation, and 255 means totally banned. The value between 0 and 255 means certain DMA can have permission to use AHB every (4 X n) AHB clock cycles.

Note that it is not recommended to limit the Bus utilization of the DMA channels because this increases the latency of response to the masters, and the transfer rate decreases as well. Before using it, programmer must make sure that the bus masters have some protective mechanism to avoid entering the wrong states.

Note that n is from 1 to 14.

LIMITER from 0 to 255. 0 means no limitation, 255 means totally banned, and others mean Bus access permission every (4 X n) AHB clock.

DMA+0n2Ch DMA Channel n Programmable Address Register DMAn_PGMADDR

Bit	31	30	29	28	27	26	25	24	23	22	21	20	19	18	17	16
Name	PGMADDR[31:16]															
Type	R/W															
Reset	0															
Bit	15	14	13	12	11	10	9	8	7	6	5	4	3	2	1	0
Name	PGMADDR[15:0]															
Type	R/W															
Reset	0															

The above registers specify the address for a half-size DMA channel. This address represents a source address if DIR in DMA_CON is set to 0, and represents a destination address if DIR in DMA_CON is set to 1. Before being able to program these register, the software should make sure that STR in DMAn_START is set to '0', that is the DMA channel is stopped and disabled completely. Otherwise, the DMA channel may run out of order.

Note that n is from 4 to 14.

PGMADDR **PGMADDR**[31:0] specifies the addresses for a half-size or a Virtual FIFO DMA channel, i.e. channel 4 – 14.

WRITE Address of the jump destination.

READ Current address of the transfer.

DMA+0n30h DMA Channel n Virtual FIFO Write Pointer Register DMAn_WRPTR

Bit	31	30	29	28	27	26	25	24	23	22	21	20	19	18	17	16
Name	WRPTR[31:16]															
Type	RO															
Bit	15	14	13	12	11	10	9	8	7	6	5	4	3	2	1	0
Name	WRPTR[15:0]															
Type	RO															

Note that n is from 11 to 14.

WRPTR Virtual FIFO Write Pointer.

MTK Confidential A (聯發)
IWIT
聯發機密不得洩漏
MTK CONFIDENTIAL
NO DISCLOSURE
IWIT

DMA+0n34h DMA Channel n Virtual FIFO Read Pointer Register DMAn_RDPTR

Bit	31	30	29	28	27	26	25	24	23	22	21	20	19	18	17	16
Name	RDPTR[31:16]															
Type	RO															
Bit	15	14	13	12	11	10	9	8	7	6	5	4	3	2	1	0
Name	RDPTR[15:0]															
Type	RO															

Note that n is from 11 to 14.

RDPTR Virtual FIFO Read Pointer.

DMA+0n38h DMA Channel n Virtual FIFO Data Count Register DMAn_FFCNT

Bit	31	30	29	28	27	26	25	24	23	22	21	20	19	18	17	16
Name																
Type																
Bit	15	14	13	12	11	10	9	8	7	6	5	4	3	2	1	0
Name	FFCNT															
Type	RO															

Note that n is from 11 to 14.

FFCNT To display the number of data stored in FIFO. 0 means FIFO empty, and FIFO is full if FFCNT is equal to FFSIZE.

DMA+0n3Ch DMA Channel n Virtual FIFO Status Register DMAn_FFSTA

Bit	31	30	29	28	27	26	25	24	23	22	21	20	19	18	17	16
Name																
Type																
Reset																
Bit	15	14	13	12	11	10	9	8	7	6	5	4	3	2	1	0
Name														ALT	EMPTY	FULL
Type														RO	RO	RO
Reset														0	1	0

Note that n is from 11 to 14.

FULL To indicate FIFO is full.

- **0** Not Full
- **1** Full

EMPTY To indicate FIFO is empty.

- **0** Not Empty
- **1** Empty

ALT To indicate FIFO Count is larger than ALTLEN. DMA issues an alert signal to UART to enable UART flow control.

- **0** Not reach alert region.
- **1** Reach alert region.

DMA+0n40h DMA Channel n Virtual FIFO Alert Length Register DMAn_ALTLEN

Bit	31	30	29	28	27	26	25	24	23	22	21	20	19	18	17	16
Name																
Type																
Reset																
Bit	15	14	13	12	11	10	9	8	7	6	5	4	3	2	1	0
Name											ALTLEN					
Type											R/W					

MTK Confidential A (保密)
IWIT
聯發科技股份有限公司
MTK CONFIDENTIAL
NO DISCLOSURE
IWIT

Reset											0

Note that n is from 11 to 14.

MTK Confidential A (機密)

ALTLEN Specifies the Alert Length of Virtual FIFO DMA. Once the remaining FIFO space is less than ALTLEN, an alert signal is issued to UART to enable flow control. Normally, ALTLEN shall be larger than 16 for UART application.

DMA+0n44h DMA Channel n Virtual FIFO Size Register DMAn_FFSIZE

Bit	31	30	29	28	27	26	25	24	23	22	21	20	19	18	17	16
Name																
Type																
Reset																
Bit	15	14	13	12	11	10	9	8	7	6	5	4	3	2	1	0
Name	FFSIZE															
Type	R/W															
Reset	0															

Note that n is from 11 to 14.

FFSIZE Specifies the FIFO Size of Virtual FIFO DMA.

3.5 Interrupt Controller

3.5.1 General Description

聯發機密不得洩漏

Figure 17 outlines the major functionality of the MCU Interrupt Controller. The interrupt controller processes all interrupt sources coming from external lines and internal MCU peripherals. Since ARM7EJ-S core supports two levels of interrupt latency, this controller generates two request signals: FIQ for fast, low latency interrupt request and IRQ for more general interrupts with lower priority.

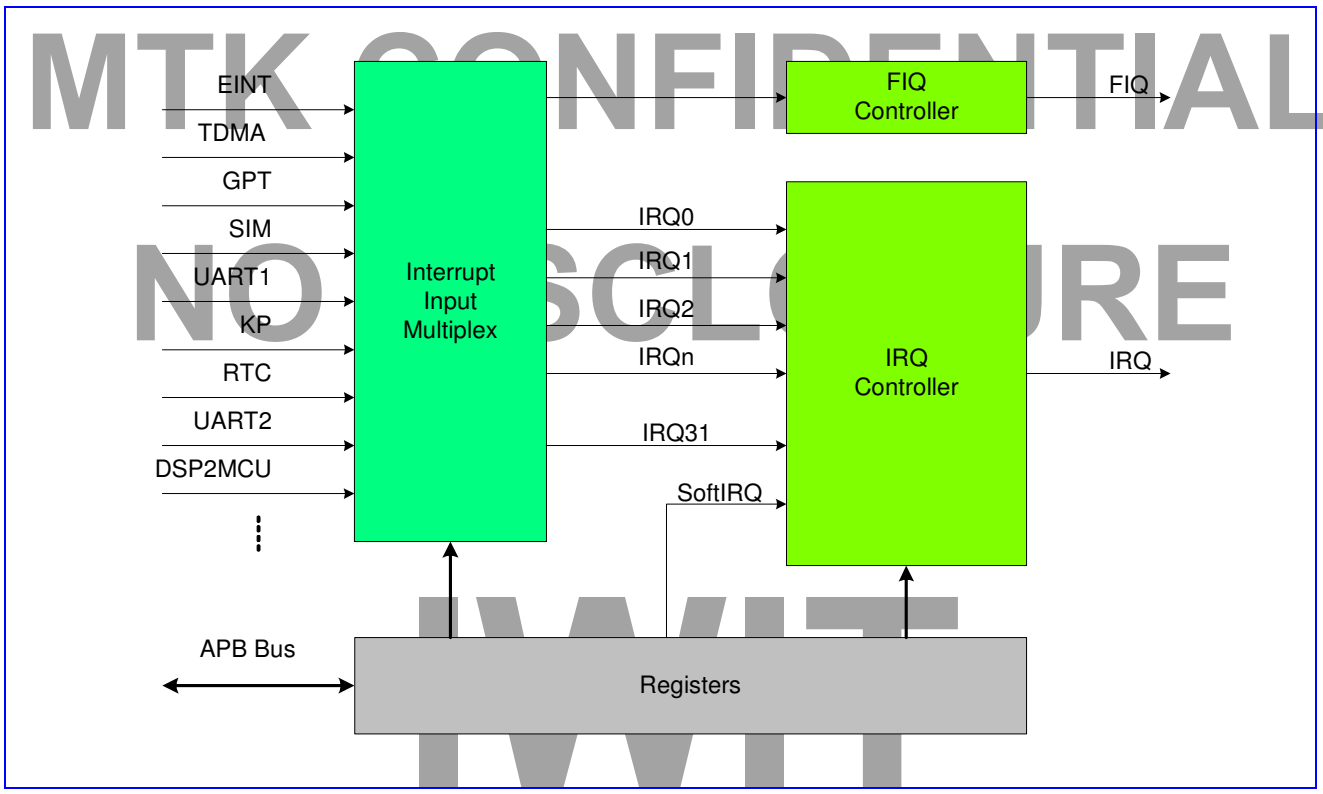

MTK CONFIDENTIAL NO DISCLOSURE

Figure 18 Block Diagram of the Interrupt Controller

One and only one of the interrupt sources can be assigned to FIQ Controller and have the highest priority in requesting timing critical service. All the others share the same IRQ signal by connecting them to IRQ Controller. The IRQ Controller manages up 32 interrupt lines of IRQ0 to IRQ31 with fixed priority in descending order.

MTK Confidential A (機密)

The Interrupt Controller provides a simple software interface by mean of registers to manipulate the interrupt request shared system. IRQ Selection Registers and FIQ Selection Register determine the source priority and connecting relation among sources and interrupt lines. IRQ Source Status Register allows software program to identify the source of interrupt that generates the interrupt request. IRQ Mask Register provides software to mask out undesired sources some time. End of Interrupt Register permits software program to indicate to the controller that a certain interrupt service routine has been finished.

Binary coded version of IRQ Source Status Register is also made available for software program to helpfully identify the interrupt source. Note that while taking advantage of this, it should also take the binary coded version of End of Interrupt Register coincidently.

One and only one of the interrupt sources can be assigned to FIQ Controller and have the highest priority in requesting timing critical service. All the others should share the same IRQ signal by connecting them to IRQ Controller. The IRQ Controller manages up 32 interrupt lines of IRQ0 to IRQ31 with fixed priority in descending order.

The Interrupt Controller provides a simple software interface by mean of registers to manipulate the interrupt request shared system. IRQ Selection Registers and FIQ Selection Register determine the source priority and connecting relation among sources and interrupt lines. IRQ Source Status Register allows software program to identify the source of interrupt that generates the interrupt request. IRQ Mask Register provides software to mask out undesired sources some time. End of Interrupt Register permits software program to indicate the controller that a certain interrupt service routine has been finished.

聯發機密不得洩漏

Binary coded version of IRQ Source Status Register is also made available for software program to helpfully identify the interrupt source. Note that while using this register, the controller also needs to use the corresponding binary coded version of End of Interrupt Register for response.

The essential Interrupt Table of ARM7EJ-S core is shown as **Table 10**.

MTK CONFIDENTIAL

Address	Description
00000000h	System Reset
00000018h	IRQ
0000001Ch	FIQ

Table 11 Interrupt Table of ARM7EJ-S

NO DISCLOSURE

3.5.1.1 Interrupt Source Masking

Interrupt controller provides the function of Interrupt Source Masking by the way of programming MASK register. Any of them can be masked individually.

However, because of the bus latency, the masking takes effect no earlier than 3 clock cycles later. In this time, the to-be-masked interrupts could come in and generate an IRQ pulse to MCU, and then disappear immediately. This IRQ forces MCU going to Interrupt Service Routine and polling Status Register (IRQ_STA or IRQ_STA2), but the register shows there is no interrupt. This might cause MCU malfunction.

There are two ways for programmer to protect their software.

1. Return from ISR (Interrupt Service Routine) immediately while the Status register shows no interrupt.
2. Set I bit of MCU before doing Interrupt Masking, and then clear it after Interrupt Masking done.

Both avoid the problem, but the first item recommended to have in the ISR.

Interrupt controller provides the function of Interrupt Source Masking by the way of programming MASK register. Any of them can be masked individually.

MTK Confidential A (機密)

However, because of the bus latency, the masking takes effect a minimal of 3 clock cycles later. In this time, the to-be-masked interrupts could come in and generate an IRQ pulse to MCU, and then disappear immediately. This IRQ forces MCU to go into Interrupt Service Routine and poll the Status Register (IRQ_STA or IRQ_STA2), but the register will show there is no interrupt. This may cause MCU malfunction.

There are two ways for programmers to protect their software.

1. Return from ISR (Interrupt Service Routine) immediately while the Status register shows no interrupt.
2. Set I bit of MCU before performing Interrupt Masking, and then clear it after Interrupt Masking done.

Both can avoid the problem, but it is always recommended to use the first method list above.

IWIT

3.5.1.2 External Interrupt

This interrupt controller also integrates an External Interrupt Controller that can support up to 4 interrupt requests coming from external sources, the EINT0~3, and 4 WakeUp interrupt requests, i.e. EINT4~7, coming from peripherals used to inform system to resume the system clock.

The four external interrupts can be used for different kind of applications, mainly for event detections: detection of hand free connection, detection of hood opening, detection of battery charger connection.

Since the external event may be unstable in a certain period, a de-bounce mechanism is introduced to ensure the functionality. The circuitry is mainly used to verify that the input signal remains stable for a programmable number of periods of the clock. When this condition is satisfied, for the appearance or the disappearance of the input, the output of the de-bounce logic changes to the desired state. Note that, because it uses the 32 KHz slow clock for performing the de-bounce process, the parameter of de-bounce period and de-bounce enable takes effect no sooner than one 32 KHz clock cycle (~31.25us) after the software program sets them. However, the polarities of EINTs are clocked with the system clock. Any changes to them take effect immediately.

聯發機密 不得洩漏
MTK CONFIDENTIAL
NO DISCLOSURE
IWIT

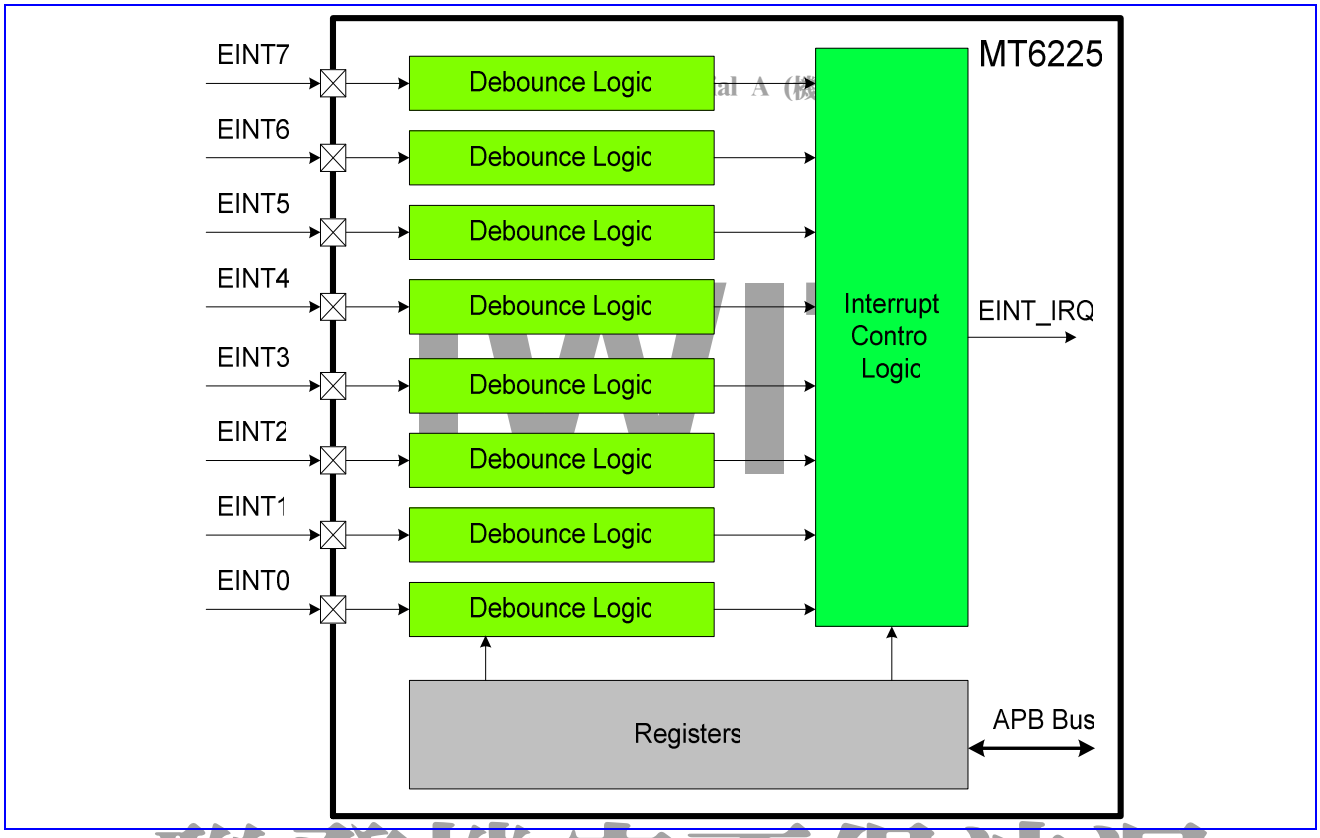

Figure 19 Block diagram of External Interrupt Controller

REGISTER ADDRESS	REGISTER NAME	SYNONYM
CIRQ + 0000h	IRQ Selection 0 Register	IRQ_SEL0
CIRQ + 0004h	IRQ Selection 1 Register	IRQ_SEL1
CIRQ + 0008h	IRQ Selection 2 Register	IRQ_SEL2
CIRQ + 000Ch	IRQ Selection 3 Register	IRQ_SEL3
CIRQ + 0010h	IRQ Selection 4 Register	IRQ_SEL4
CIRQ + 0014h	IRQ Selection 5 Register	IRQ_SEL5
CIRQ + 0018h	FIQ Selection Register	FIQ_SEL
CIRQ + 001Ch	IRQ Mask Register	IRQ_MASK
CIRQ + 0020h	IRQ Mask Disable Register	IRQ_MASK_DIS
CIRQ + 0024h	IRQ Mask Enable Register	IRQ_MASK_EN
CIRQ + 0028h	IRQ Status Register	IRQ_STA
CIRQ + 002Ch	IRQ End of Interrupt Register	IRQ_EOI
CIRQ + 0030h	IRQ Sensitive Register	IRQ_SENS
CIRQ + 0034h	IRQ Software Interrupt Register	IRQ_SOFT
CIRQ + 0038h	FIQ Control Register	FIQ_CON
CIRQ + 003Ch	FIQ End of Interrupt Register	FIQ_EOI
CIRQ + 0040h	Binary Coded Value of IRQ_STATUS	IRQ_STA2
CIRQ + 0044h	Binary Coded Value of IRQ_EOI	IRQ_EOI2
CIRQ + 0100h	EINT Status Register	EINT_STA
CIRQ + 0104h	EINT Mask Register	EINT_MASK
CIRQ + 0108h	EINT Mask Disable Register	EINT_MASK_DIS

聯發機密不得洩漏
MTK CONFIDENTIAL
NO DISCLOSURE
IWIT

CIRQ + 010Ch	EINT Mask Enable Register	EINT_MASK_EN
CIRQ + 0110h	EINT Interrupt Acknowledge Register	EINT_INTACK
CIRQ + 0114h	EINT Sensitive Register	EINT_SENS
CIRQ + 0120h	EINT0 De-bounce Control Register	EINT0_CON
CIRQ + 0130h	EINT1 De-bounce Control Register	EINT1_CON
CIRQ + 0140h	EINT2 De-bounce Control Register	EINT2_CON
CIRQ + 0150h	EINT3 De-bounce Control Register	EINT3_CON
CIRQ + 0160h	EINT4 De-bounce Control Register	EINT4_CON
CIRQ + 0170h	EINT5 De-bounce Control Register	EINT5_CON
CIRQ + 0180h	EINT6 De-bounce Control Register	EINT6_CON
CIRQ + 0190h	EINT7 De-bounce Control Register	EINT7_CON

Table 12 Interrupt Controller Register Map

MTK Confidential A (機密)
IWIT
聯發機密不得洩漏
MTK CONFIDENTIAL
NO DISCLOSURE
IWIT

3.5.2 Register Definitions

CIRQ+0000h IRQ Selection 0 Register IRQ_SEL0

Bit	31	30	29	28	27	26	25	24	23	22	21	20	19	18	17	16
Name			IRQ5					IRQ4					IRQ3			
Type			R/W					R/W					R/W			
Reset			5					4					3			
Bit	15	14	13	12	11	10	9	8	7	6	5	4	3	2	1	0
Name		IRQ2						IRQ1					IRQ0			
Type		R/W						R/W					R/W			
Reset		2						1					0			

CIRQ+0004h IRQ Selection 1 Register IRQ_SEL1

Bit	31	30	29	28	27	26	25	24	23	22	21	20	19	18	17	16
Name			IRQB					IRQA					IRQ9			
Type			R/W					R/W					R/W			
Reset			B					A					9			
Bit	15	14	13	12	11	10	9	8	7	6	5	4	3	2	1	0
Name		IRQ8					IRQ7					IRQ6				
Type		R/W					R/W					R/W				
Reset		8					7					6				

CIRQ+0008h IRQ Selection 2 Register IRQ_SEL2

Bit	31	30	29	28	27	26	25	24	23	22	21	20	19	18	17	16
Name			IRQ11					IRQ10					IRQF			
Type			R/W					R/W					R/W			
Reset			11					10					F			
Bit	15	14	13	12	11	10	9	8	7	6	5	4	3	2	1	0
Name		IRQE					IRQD					IRQC				
Type		R/W					R/W					R/W				
Reset		E					D					C				

CIRQ+000Ch IRQ Selection 3 Register IRQ_SEL3

Bit	31	30	29	28	27	26	25	24	23	22	21	20	19	18	17	16
Name			IRQ17					IRQ16					IRQ15			
Type			R/W					R/W					R/W			
Reset			17					16					15			
Bit	15	14	13	12	11	10	9	8	7	6	5	4	3	2	1	0
Name		IRQ14					IRQ13					IRQ12				

Type		R/W	R/W	R/W
Reset		14	13	12

MTK Confidential A (機密)

CIRQ+0010h IRQ Selection 4 Register IRQ_SEL4

Bit	31	30	29	28	27	26	25	24	23	22	21	20	19	18	17	16
Name			IRQ1D					IRQ1C					IRQ1B			
Type			R/W					R/W					R/W			
Reset			1D					1C					1B			
Bit	15	14	13	12	11	10	9	8	7	6	5	4	3	2	1	0
Name		IRQ1A							IRQ19			IRQ18				
Type		R/W							R/W			R/W				
Reset		1A							19			18				

CIRQ+0014h IRQ Selection 5 Register IRQ_SEL5

Bit	31	30	29	28	27	26	25	24	23	22	21	20	19	18	17	16
Name																
Type																
Reset																
Bit	15	14	13	12	11	10	9	8	7	6	5	4	3	2	1	0
Name							IRQ1F					IRQ1E				
Type							R/W					R/W				
Reset							1F					1E				

CIRQ+0018h FIQ Selection Register FIQ_SEL

Bit	31	30	29	28	27	26	25	24	23	22	21	20	19	18	17	16
Name																
Type																
Reset																
Bit	15	14	13	12	11	10	9	8	7	6	5	4	3	2	1	0
Name												FIQ				
Type												R/W				
Reset												0				

MTK CONFIDENTIAL NO DISCLOSURE

The IRQ/FIQ Selection Registers provide system designers with a flexible routing scheme to make various mappings of priority among interrupt sources possible. It allows the interrupt sources to be mapped onto interrupt requests of either FIQ or IRQ. While only one interrupt source can be assigned to FIQ, the other ones should share IRQ by mapping them onto IRQ0 to IRQ1F, which are connected to IRQ controller. The priority of IRQ0-IRQ1F is fixed, i.e. IRQ0 > IRQ1 > IRQ2 > … > IRQ1E > IRQ1F. During the software configuration process, the Interrupt Source Code of desired interrupt source should be written into source field of the corresponding IRQ_SEL0-IRQ_SEL4/FIQ_SEL. 5-bit Interrupt Source Codes for all interrupt sources are fixed and defined in **Table 13**. The IRQ/FIQ Selection Registers provide system designers with a flexible routing scheme to make various mappings of priority among interrupt sources possible. The registers allow the interrupt sources to be mapped onto interrupt requests of either FIQ or IRQ. While only one interrupt source can be assigned to FIQ, the other ones share IRQs by mapping them onto IRQ0 to IRQ1F connected to IRQ controller. The priority sequence of IRQ0~IRQ1F is fixed, i.e. IRQ0 > IRQ1 > IRQ2 > … > IRQ1E > IRQ1F. During the software configuration process, the Interrupt Source Code of desired interrupt source should be written into source field of the corresponding IRQ_SEL0-IRQ_SEL4/FIQ_SEL. Five-bit Interrupt Source Codes for all interrupt sources are fixed and defined.

Interrupt Source	STA2 (Hex)	STA
MFIQ	0	00000001
TDMA_CTIRQ1	1	00000002
TDMA_CTIRQ2	2	00000004
DSP2CPU	3	00000008

MTK Confidential A (機密)

SIM	4	00000010
DMA	5	00000020
TDMA	6	00000040
UART1	7	00000080
KeyPad	8	00000100
UART2	9	00000200
GPTimer	A	00000400
EINT	B	00000800
USB	C	00001000
MSDC	D	00002000
RTC	E	00004000
IrDA	F	00008000
LCD	10	00010000
UART3	11	00020000
MIRQ	12	00040000
WDT	13	00080000
NOT USED	14	
Resizer	15	00200000
NFI	16	00400000
B2PSI	17	00800000
IRDBG	18	01000000
MSDC card detect	19	02000000
I^2C	1a	04000000
NOT USED	1b	
NOT USED	1c	
NOT USED	1d	
CAM	1e	40000000

Table 14 Interrupt Source Code for Interrupt Sources

聯發機密不得洩漏
MTK CONFIDENTIAL
NO DISCLOSURE

FIQ, IRQ0-1F The 5-bit content of this field would be the Interrupt Source Code shown in **Table 15** indicating that the certain interrupt source uses the associated interrupt line to generate fast interrupt requests. The 5-bit content of this field corresponds to an Interrupt Source Code shown above.

CIRQ+001Ch IRQ Mask Register IRQ_MASK

Bit	31	30	29	28	27	26	25	24	23	22	21	20	19	18	17	16
Name	IRQ1F	IRQ1E	IRQ1D	IRQ1C	IRQ1B	IRQ1A	IRQ19	IRQ18	IRQ17	IRQ16	IRQ15	IRQ14	IRQ13	IRQ12	IRQ11	IRQ10
Type	R/W	R/W	R/W	R/W	R/W	R/W	R/W	R/W	R/W	R/W	R/W	R/W	R/W	R/W	R/W	R/W
Reset	1	1	1	1	1	1	1	1	1	1	1	1	1	1	1	1
Bit	15	14	13	12	11	10	9	8	7	6	5	4	3	2	1	0
Name	IRQF	IRQE	IRQD	IRQC	IRQB	IRQA	IRQ9	IRQ8	IRQ7	IRQ6	IRQ5	IRQ4	IRQ3	IRQ2	IRQ1	IRQ0
Type	R/W	R/W	R/W	R/W	R/W	R/W	R/W	R/W	R/W	R/W	R/W	R/W	R/W	R/W	R/W	R/W
Reset	1	1	1	1	1	1	1	1	1	1	1	1	1	1	1	1

This register contains a mask bit for each interrupt line in IRQ Controller. The register allows each interrupt source IRQ0 to IRQ1F to be disabled or masked separately under software control. After a system reset, all bit values are set to 1 to indicate that interrupt requests are prohibited.

This register contains mask bit for each interrupt line in IRQ Controller. It allows each interrupt source of IRQ0 to IRQ1F to be disabled or masked out separately under software control. After System Reset, all bit values will be set to '1' to indicate that interrupt requests are prohibited.

MTK Confidential A (機密)

IRQ0-1F Mask control for the associated interrupt source in the IRQ controllerMask Control for the Associated Interrupt Source in IRQ Controller

- **0** Interrupt is enabled
- **1** Interrupt is disabled

CIRQ+0020h IRQ Mask Clear Register

IRQ_MASK_CLR

Bit	31	30	29	28	27	26	25	24	23	22	21	20	19	18	17	16
Name	IRQ1F	IRQ1E	IRQ1D	IRQ1C	IRQ1B	IRQ1A	IRQ19	IRQ18	IRQ17	IRQ16	IRQ15	IRQ14	IRQ13	IRQ12	IRQ11	IRQ10
Type	W1C	W1C	W1C	W1C	W1C	W1C	W1C	W1C	W1C	W1C	W1C	W1C	W1C	W1C	W1C	W1C
Bit	15	14	13	12	11	10	9	8	7	6	5	4	3	2	1	0
Name	IRQF	IRQE	IRQD	IRQC	IRQB	IRQA	IRQ9	IRQ8	IRQ7	IRQ6	IRQ5	IRQ4	IRQ3	IRQ2	IRQ1	IRQ0
Type	W1C	W1C	W1C	W1C	W1C	W1C	W1C	W1C	W1C	W1C	W1C	W1C	W1C	W1C	W1C	W1C

This register is used to clear bits in IRQ Mask Register. When writing to this register, the data bits that are HIGH cause the corresponding bits in IRQ Mask Register to be cleared. Data bits that are LOW have no effect on the corresponding bits in IRQ Mask Register.

This register is used to clear bits in the IRQ Mask Register. When writing to this register, the data bits that are high will cause the corresponding bits in the IRQ Mask Register to be cleared. Data bits that are low have no effect on the corresponding bits in the IRQ Mask Register

聯發機密不得洩漏

IRQ0-1F Clear corresponding bits in IRQ Mask Register.

- **0** nNo effect
- **1** Disable the corresponding MASK bit

MTK CONFIDENTIAL

CIRQ+0024h IRQ Mask SET Register

IRQ_MASK_SET

Bit	31	30	29	28	27	26	25	24	23	22	21	20	19	18	17	16
Name	IRQ1F	IRQ1E	IRQ1D	IRQ1C	IRQ1B	IRQ1A	IRQ19	IRQ18	IRQ17	IRQ16	IRQ15	IRQ14	IRQ13	IRQ12	IRQ11	IRQ10
Type	W1S	W1S	W1S	W1S	W1S	W1S	W1S	W1S	W1S	W1S	W1S	W1S	W1S	W1S	W1S	W1S
Bit	15	14	13	12	11	10	9	8	7	6	5	4	3	2	1	0
Name	IRQF	IRQE	IRQD	IRQC	IRQB	IRQA	IRQ9	IRQ8	IRQ7	IRQ6	IRQ5	IRQ4	IRQ3	IRQ2	IRQ1	IRQ0
Type	W1S	W1S	W1S	W1S	W1S	W1S	W1S	W1S	W1S	W1S	W1S	W1S	W1S	W1S	W1S	W1S

NO DISCLOSURE

This register is used to set bits in the IRQ Mask Register. When writing to this register, the data bits that are HIGH cause the corresponding bits in IRQ Mask Register to be set. Data bits that are LOW have no effect on the corresponding bits in IRQ Mask Register.

This register is used to set bits in the IRQ Mask Register. When writing to this register, the data bits that are high will cause the corresponding bits in the IRQ Mask Register to be set. Data bits that are low have no effect on the corresponding bits in the IRQ Mask Register

IRQ0-1F Set corresponding bits in IRQ Mask Register.

- **0** nNo effect
- **1** Enable corresponding MASK bit

CIRQ+0028h IRQ Source Status Register

IRQ_STA

Bit	31	30	29	28	27	26	25	24	23	22	21	20	19	18	17	16

Name	IRQ1F	IRQ1E	IRQ1D	IRQ1C	IRQ1B	IRQ1A	IRQ19	IRQ18	IRQ17	IRQ16	IRQ15	IRQ14	IRQ13	IRQ12	IRQ11	IRQ10
Type	RO	RO	RO	RO	RO	RO	RO	RO	RO	RO	RO	RO	RO	RO	RO	RO
Reset	0	0	0	0	0	0	0	0	0	0	0	0	0	0	0	0
Bit	15	14	13	12	11	10	9	8	7	6	5	4	3	2	1	0
Name	IRQF	IRQE	IRQD	IRQC	IRQB	IRQA	IRQ9	IRQ8	IRQ7	IRQ6	IRQ5	IRQ4	IRQ3	IRQ2	IRQ1	IRQ0
Type	RO	RO	RO	RO	RO	RO	RO	RO	RO	RO	RO	RO	RO	RO	RO	RO
Reset	0	0	0	0	0	0	0	0	0	0	0	0	0	0	0	0

MTK Confidential A (機密)

This Register allows software to poll which interrupt line has generated an IRQ interrupt request. A bit set to 1 indicates a corresponding active interrupt line. Only one flag is active at a time. The IRQ_STA is type of read-clear; write access has no effect on the content.

This Register allows software to poll which interrupt line generates the IRQ interrupt request. A bit set to '1' indicates a corresponding active interrupt line. Only one flag is active at a time. The IRQ_STA is type of READ-Clear, write access will have no effect to the content.

IRQ0-1F Interrupt indicator for the associated interrupt source.Interrupt Indication for the Associated Interrupt Source

0 The associated interrupt source is non-active.

1 The associated interrupt source is asserted.

CIRQ+002Ch IRQ End of Interrupt Register IRQ_EOI

Bit	31	30	29	28	27	26	25	24	23	22	21	20	19	18	17	16
Name	IRQ1F	IRQ1E	IRQ1D	IRQ1C	IRQ1B	IRQ1A	IRQ19	IRQ18	IRQ17	IRQ16	IRQ15	IRQ14	IRQ13	IRQ12	IRQ11	IRQ10
Type	WO	WO	WO	WO	WO	WO	WO	WO	WO	WO	WO	WO	WO	WO	WO	WO
Reset	0	0	0	0	0	0	0	0	0	0	0	0	0	0	0	0
Bit	15	14	13	12	11	10	9	8	7	6	5	4	3	2	1	0
Name	IRQF	IRQE	IRQD	IRQC	IRQB	IRQA	IRQ9	IRQ8	IRQ7	IRQ6	IRQ5	IRQ4	IRQ3	IRQ2	IRQ1	IRQ0
Type	WO	WO	WO	WO	WO	WO	WO	WO	WO	WO	WO	WO	WO	WO	WO	WO
Reset	0	0	0	0	0	0	0	0	0	0	0	0	0	0	0	0

聯發科技 不得洩漏

This register provides a mean for software to relinquish and to refresh the interrupt controller. Writing a 1 to a specific bit position results in an End of Interrupt command issued internally to the corresponding interrupt line.

MTK CONFIDENTIAL

This register provides a mean for software to relinquish and refresh the Interrupt Controller. Writing a '1' to the specific bit position will result in an End of Interrupt Command internally to the corresponding interrupt line.

IRQ0-1F End of Interrupt command for the associated interrupt line.End of Interrupt Command for the Associated Interrupt Line

0 No service is currently in progress or pending

1 Interrupt request is in-service

NO DISCLOSURE

CIRQ+0030h IRQ Sensitive Register IRQ_SENS

Bit	31	30	29	28	27	26	25	24	23	22	21	20	19	18	17	16
Name	IRQ1F	IRQ1E	IRQ1D	IRQ1C	IRQ1B	IRQ1A	IRQ19	IRQ18	IRQ17	IRQ16	IRQ15	IRQ14	IRQ13	IRQ12	IRQ11	IRQ10
Type	R/W	R/W	R/W	R/W	R/W	R/W	R/W	R/W	R/W	R/W	R/W	R/W	R/W	R/W	R/W	R/W
Reset	0	0	0	0	0	0	0	0	0	0	0	0	0	0	0	0
Bit	15	14	13	12	11	10	9	8	7	6	5	4	3	2	1	0
Name	IRQF	IRQE	IRQD	IRQC	IRQB	IRQA	IRQ9	IRQ8	IRQ7	IRQ6	IRQ5	IRQ4	IRQ3	IRQ2	IRQ1	IRQ0
Type	R/W	R/W	R/W	R/W	R/W	R/W	R/W	R/W	R/W	R/W	R/W	R/W	R/W	R/W	R/W	R/W
Reset	0	0	0	0	0	0	0	0	0	0	0	0	0	0	0	0

All interrupt lines of IRQ Controller, IRQ0~IRQ1F can be programmed as either edge or level sensitive. By default, all the interrupt lines are edge sensitive and should be active LOW. Once a interrupt line is programmed as edge sensitive, an interrupt request is triggered only at the falling edge of interrupt line, and the next interrupt is not accepted

until the EOI command is given. However, level sensitive interrupts trigger is according to the signal level of the interrupt line. Once the interrupt line become from HIGH to LOW, an interrupt request is triggered, and another interrupt request is triggered if the signal level remain LOW after an EOI command. Note that in edge sensitive mode, even if the signal level remains LOW after EOI command, another interrupt request is not triggered. That is because edge sensitive interrupt is only triggered at the falling edge.

MTK Confidential A (機密)

All interrupt lines of IRQ Controller, IRQ0-IRQ1F can be programmed as either edge or level sensitive. By default, all the interrupt lines are edge sensitive and should be active LOW. Once a interrupt line is programmed as edge sensitive, an interrupt request is triggered only at the falling edge of interrupt line, and the next interrupt will not be taken until the EOI command is given. However, level sensitive interrupt triggering is according to the signal level of the interrupt line. Once the interrupt line become from High to Low, an interrupt request is triggered, and another interrupt request will be triggered if the signal level remain Low after EOI command. Please note that in edge sensitive mode, even if the signal level remains Low after EOI command, another interrupt request will not be triggered. This is because edge sensitive interrupt is only triggered at the falling edge.

IRQ0-1F Sensitivity type of the associated Interrupt SourceSensitive Type of the Associated Interrupt Source

- **0** Edge sensitivity with active LOW
- **1** Level sensitivity with active LOW

CIRQ+0034h IRQ Software Interrupt Register IRQ_SOFT

Bit	31	30	29	28	27	26	25	24	23	22	21	20	19	18	17	16
Name	IRQ1F	IRQ1E	IRQ1D	IRQ1C	IRQ1B	IRQ1A	IRQ19	IRQ18	IRQ17	IRQ16	IRQ15	IRQ14	IRQ13	IRQ12	IRQ11	IRQ10
Type	R/W	R/W	R/W	R/W	R/W	R/W	R/W	R/W	R/W	R/W	R/W	R/W	R/W	R/W	R/W	R/W
Reset	0	0	0	0	0	0	0	0	0	0	0	0	0	0	0	0
Bit	15	14	13	12	11	10	9	8	7	6	5	4	3	2	1	0
Name	IRQF	IRQE	IRQD	IRQC	IRQB	IRQA	IRQ9	IRQ8	IRQ7	IRQ6	IRQ5	IRQ4	IRQ3	IRQ2	IRQ1	IRQ0
Type	R/W	R/W	R/W	R/W	R/W	R/W	R/W	R/W	R/W	R/W	R/W	R/W	R/W	R/W	R/W	R/W
Reset	0	0	0	0	0	0	0	0	0	0	0	0	0	0	0	0

Setting "1" to the specific bit position generates a software interrupt for corresponding iInterrupt Lline before mask. This register is used for debug purpose.

IRQ0-IRQ1F Software Interrupt

CIRQ+0038h FIQ Control Register FIQ_CON

Bit	31	30	29	28	27	26	25	24	23	22	21	20	19	18	17	16
Name																
Type																
Reset																
Bit	15	14	13	12	11	10	9	8	7	6	5	4	3	2	1	0
Name															SENS	MASK
Type															R/W	R/W
Reset															0	1

This register provides a means for software program to control the FIQ cController.

MASK Mask cControl for the FIQ Interrupt Source

- **0** Interrupt is enabled
- **1** Interrupt is disabled

SENS Sensitivitye Ttype of the FIQ Interrupt Source

- **0** Edge sensitivity with active LOW
- **1** Level sensitivity with active LOW

MTK CONFIDENTIAL

CIRQ+003Ch FIQ End of Interrupt Register FIQ_EOI

Bit	31	30	29	28	27	26	25	24	23	22	21	20	19	18	17	16
Name																
Type																
Reset																
Bit	15	14	13	12	11	10	9	8	7	6	5	4	3	2	1	0
Name																EOI
Type																WO
Reset																0

This register provides a means for software to relinquish and to refresh the FIQ controller. Writing a '1' to the specific bit position results in an End of Interrupt command issued internally to the corresponding interrupt line.

This register provides a mean for software to relinquish and refresh the FIQ Controller. Writing a '1' to the specific bit position will result in an End of Interrupt Command internally to the corresponding interrupt line.

EOI End of Interrupt Ccommand

CIRQ+0040h Binary Coded Value of IRQ_STATUS IRQ_STA2

Bit	31	30	29	28	27	26	25	24	23	22	21	20	19	18	17	16
Name																
Type																
Reset																
Bit	15	14	13	12	11	10	9	8	7	6	5	4	3	2	1	0
Name								NOIRQ				STAS				
Type								RO						RO		
Reset								0						0		

This Register is a binary coded version of IRQ_STA. It is used by the software program to poll which interrupt line has generated the IRQ interrupt request in a much easier way. Any read to it has the same result as reading IRQ_STA. The IRQ_STA2 is also read-only; write access has no effect on the content. Note that IRQ_STA2 should be coupled with IRQ_EOI2 while using it.

This Register is a binary coded version of IRQ_STA. It is used for software program to poll and see which interrupt line generated the IRQ interrupt request in a much easier way. Any read to it has the same result as reading IRQ_STA. The IRQ_STA2 is also READ-ONLY, write access has no effect to the content. Note that, IRQ_STA2 should be coupled with IRQ_EOI2 while using it.

STSA Binary cCoded Vvalue of IRQ_STA

NOIRQ Indicating if there is an IRQ or not. If there is no IRQ, this bit will beis highHIGH, and the value of STSA should beis 0_0000b.

CIRQ+0044h Binary Coded Value of IRQ_EOI IRQ_EOI2

Bit	31	30	29	28	27	26	25	24	23	22	21	20	19	18	17	16
Name																
Type																
Reset																
Bit	15	14	13	12	11	10	9	8	7	6	5	4	3	2	1	0
Name												-		EOI		
Type														WO		
Reset														0		

This register is a binary coded version of IRQ_EOI. It provides an easier way for software program to relinquish and to refresh the interrupt controller. Writing a specific code results in an End of Interrupt command issued internally to the corresponding interrupt line. Note that IRQ_EOI2 should be coupled with IRQ_STA2 while using it.

MTK Confidential A (保密)
IWIT
聯發科技保密資料 未經授權不得洩漏
MTK CONFIDENTIAL
NO DISCLOSURE
IWIT

This register is a binary coded version of IRQ_EOI. It provides an easier way for software program to relinquish and refresh the Interrupt Controller. Writing a specific code will result in an End of Interrupt Command internally to the corresponding interrupt line. Note that, IRQ_EOI2 should be coupled with IRQ_STA2 while using it.

MTK Confidential A (機密)

EOI Binary Ccoded Vvalue of IRQ_EOI

CIRQ+0100h EINT Interrupt Status Register EINT_STA

Bit	31	30	29	28	27	26	25	24	23	22	21	20	19	18	17	16
Name																
Type																
Reset																
Bit	15	14	13	12	11	10	9	8	7	6	5	4	3	2	1	0
Name									EINT7	EINT6	EINT5	EINT4	EINT3	EINT2	EINT1	EINT0
Type									RO	RO	RO	RO	RO	RO	RO	RO
Reset									0	0	0	0	0	0	0	0

This register keeps up with current status of which EINT Source generated the interrupt request. If EINT sources are set to edge sensitive, EINT_IRQ will beis de-asserted while this register is read.

EINT0-EINT7 Interrupt Status

- **0** No Iinterrupt Rrequest is generated
- **1** Interrupt Rrequest is pending

CIRQ+0104h EINT Interrupt Mask Register EINT_MASK

Bit	31	30	29	28	27	26	25	24	23	22	21	20	19	18	17	16
Name																
Type																
Reset																
Bit	15	14	13	12	11	10	9	8	7	6	5	4	3	2	1	0
Name									EINT7	EINT6	EINT5	EINT4	EINT3	EINT2	EINT1	EINT0
Type									R/W	R/W	R/W	R/W	R/W	R/W	R/W	R/W
Reset									1	1	1	1	1	1	1	1

This register controls whether or not EINT Source is allowed to generate an interrupt request. Setting a "1" to the specific bit position prohibits the external interrupt line from becoming active.

This register controls whether if EINT Source is allowed to generate interrupt request. Setting a "1" to the specific bit position prohibits the External Interrupt Line to active accordingly.

EINT0-EINT7 Interrupt Mask

- **0** Interrupt rRequest is enabled.
- **1** Interrupt Rrequest is disabled.

MTK CONFIDENTIAL
NO DISCLOSURE

CIRQ+0108h EINT Interrupt Mask Clear Register EINT_MASK_CLR

Bit	31	30	29	28	27	26	25	24	23	22	21	20	19	18	17	16
Name																
Type																
Bit	15	14	13	12	11	10	9	8	7	6	5	4	3	2	1	0
Name									EINT7	EINT6	EINT5	EINT4	EINT3	EINT2	EINT1	EINT0
Type									W1C	W1C	W1C	W1C	W1C	W1C	W1C	W1C

This register is used to clear individual mask bits. Only the bits set to 1 are in effect, and interrupt masks for which the mask bit is set are cleared (set to 0). Otherwise the interrupt mask bit retains its original value.

This register is used to individually clear mask bit. Only the bits set to 1 are in effect, and these mask bits will set to 0. Otherwise mask bits keep original value.

EINT0-EINT7 Disable Mask mask for the aAssociated eExternal Iinterrupt sSource

- **0** Nno effect.
- **1** Disable the corresponding MASK bit.

MTK Confidential A (機密)

CIRQ+010Ch EINT Interrupt Mask Set Register — EINT_MASK_SET

Bit	31	30	29	28	27	26	25	24	23	22	21	20	19	18	17	16
Name																
Type																
Bit	15	14	13	12	11	10	9	8	7	6	5	4	3	2	1	0
Name									EINT7	EINT6	EINT5	EINT4	EINT3	EINT2	EINT1	EINT0
Type									W1S	W1S	W1S	W1S	W1S	W1S	W1S	W1S

This register is used to set individual mask bits. Only the bits set to 1 are in effect, and interrupt masks for which the mask bit is set are set to 1. Otherwise the interrupt mask bit retains its original value.

This register is used to individually set mask bit. Only the bits set to 1 are in effect, and these mask bits will set to 1. Otherwise mask bits keep original value.

EINT0-EINT7 Disable Mmask for the Aassociated Eexternal Iinterrupt Ssource.

- **0** Nno effect.
- **1** Enable corresponding MASK bit.

CIRQ+0110h EINT Interrupt Acknowledge Register — EINT_INTACK

Bit	31	30	29	28	27	26	25	24	23	22	21	20	19	18	17	16
Name																
Type																
Reset																
Bit	15	14	13	12	11	10	9	8	7	6	5	4	3	2	1	0
Name									EINT7	EINT6	EINT5	EINT4	EINT3	EINT2	EINT1	EINT0
Type									WO	WO	WO	WO	WO	WO	WO	WO
Reset									0	0	0	0	0	0	0	0

Writing "1" to the specific bit position acknowledge the interrupt request correspondingly to the external interrupt line source.

Writing "1" to the specific bit position means to acknowledge the interrupt request correspondingly to the External Interrupt Line source.

EINT0-EINT7 Interrupt aAcknowledgement

- **0** No effect.
- **1** Interrupt Request is acknowledged.

MTK CONFIDENTIAL
NO DISCLOSURE

CIRQ+0114h EINT Sensitive Register — EINT_SENS

Bit	31	30	29	28	27	26	25	24	23	22	21	20	19	18	17	16
Name																
Type																
Reset																
Bit	15	14	13	12	11	10	9	8	7	6	5	4	3	2	1	0
Name									EINT7	EINT6	EINT5	EINT4	EINT3	EINT2	EINT1	EINT0
Type									R/W	R/W	R/W	R/W	R/W	R/W	R/W	R/W
Reset									1	1	1	1	1	1	1	1

Sensitivity type of external interrupt source.

EINT0-7 Sensitive tType of the Aassociated Eexternal Iinterrupt sSource

- **0** Edge sensitivity.
- **1** Level sensitivity.

CIRQ+01m0h EINTn De-bounce Control Register EINTn_CON

Bit	31	30	29	28	27	26	25	24	23	22	21	20	19	18	17	16
Name																
Type																
Reset																
Bit	15	14	13	12	11	10	9	8	7	6	5	4	3	2	1	0
Name	EN				POL	CNT										
Type	R/W				R/W	R/W										
Reset	0				0	0										

These registers control the de-bounce logic for external interrupt sources in order to minimize the possibility of false activations.

These registers control the de-bounce logic for external interrupt sources in order to minimize the possibility of false activations. EINT4 – 7 have no de-bounce mechanism. Therefore only bit POL is used.

Note that n is from 0 to 7, and m is n plus+ 2.

CNT De-bounce Dduration in terms of numbers of 32KHz clock cycles

POL Activation tType of the EINT sSource

- **0** Negative polarity
- **1** Positive polarity

EN De-bounce cControl Ccircuit

- **0** Disable
- **1** Enable

3.6 Code Cache controller

3.6.1 General Description

A new subsystem consisting of cache and TCM (tightly coupled memory) will be implemented in MT6225. This subsystem is placed between MCU core and AHB bus interface, as shown in Figure 20.

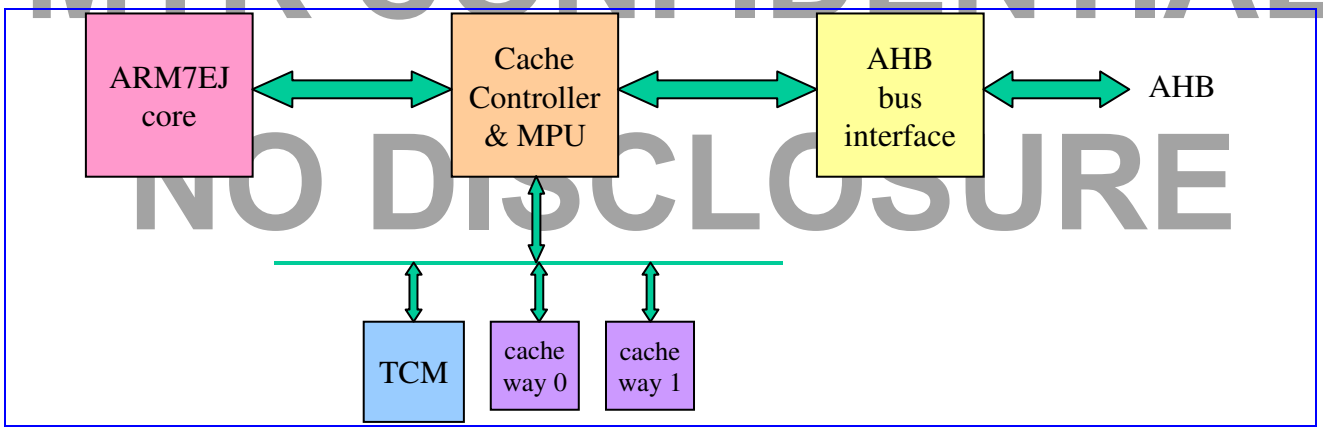

Figure 20 Cache and TCM subsystem

TCM is a high-speed (zero wait state) dedicated memory accessed by MCU exclusively. Because MCU can run at 104MHz and on-chip bus runs at maximum 52MHz, there will be latency penalty when MCU accesses memory or peripherals through on-chip bus. By moving timing critical code and data into TCM, MCU performance can be increased and the response to particular events can be guaranteed.

Another method to increase MCU performance is the introduction of cache. Cache is a small memory, keeping the copy of external memory. If MCU reads a cacheable data, the data will be copied to cache. Once MCU needs the same data

MTK Confidential A (機密)
IWIT
聯發機密不得洩漏
MTK CONFIDENTIAL
NO DISCLOSURE
IWIT

later, it can get it directly from cache (called cache hit) instead of from external memory, which takes long time compared to high-speed (zero wait state) cache memory.

MTK Confidential A (機密)

Since a large external memory maps to a small cache, cache can hold only a small portion of external memory. If MCU accesses a data not found in cache (called cache miss), some contents of cache must be dropped (flushed) and the required data is transferred from external memory (called cache line fill) and stored to cache. On the other hand, TCM is not the copy of anything else. The best way to use TCM is to put critical code/data in TCM in the memory usage plan. After power on reset, the boot loader copies TCM contents from external storage (such like flash) to internal TCM. If necessary, MCU can replace a portion of TCM content with other data on external storage in the runtime to implement a mechanism such like "overlay". TCM is also an ideal place to put stack data.

The sizes of TCM and cache can be set to one of 3 configurations:

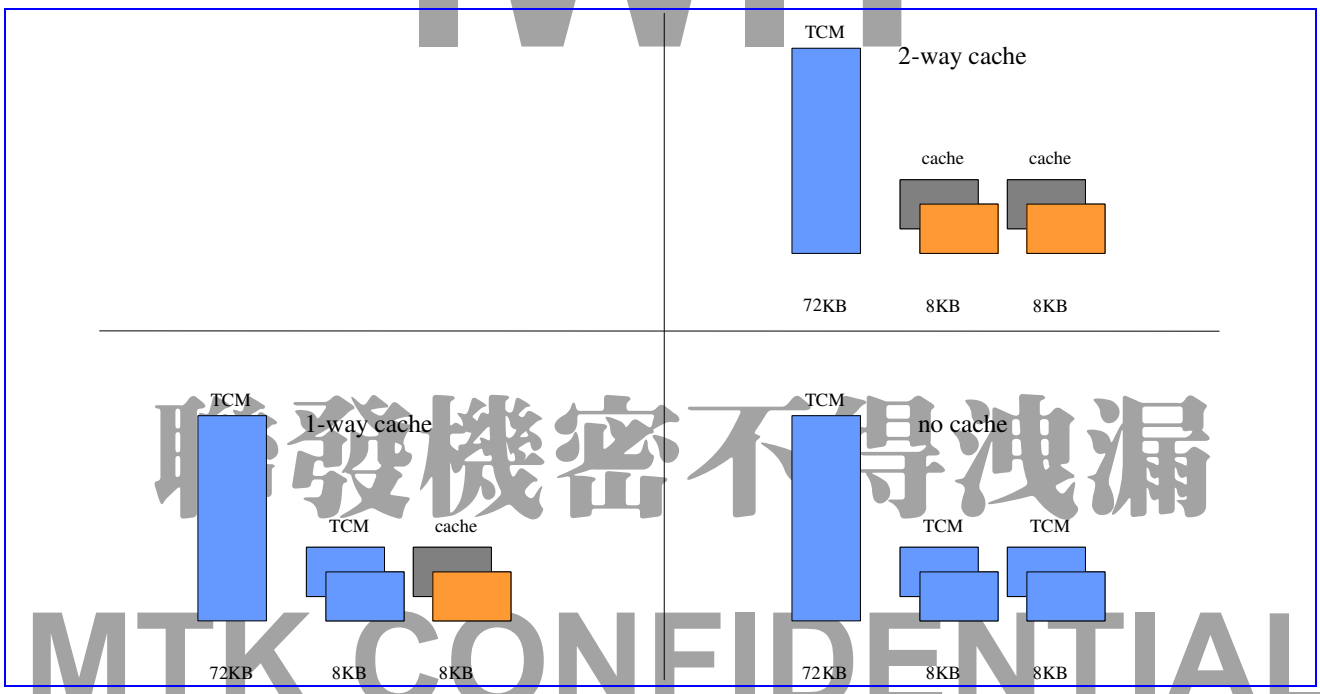

Figure 21 Configurations of TCM and cache

- 72KB TCM, 16KB cache
- 80KB TCM, 8KB cache
- 88KB TCM, 0KB cache

These configurations provide flexibility for software to adjust for optimum system performance.

The address mapping of these memories is like the following:

IWIT
聯發機密不得洩漏
MTK CONFIDENTIAL
NO DISCLOSURE
IWIT

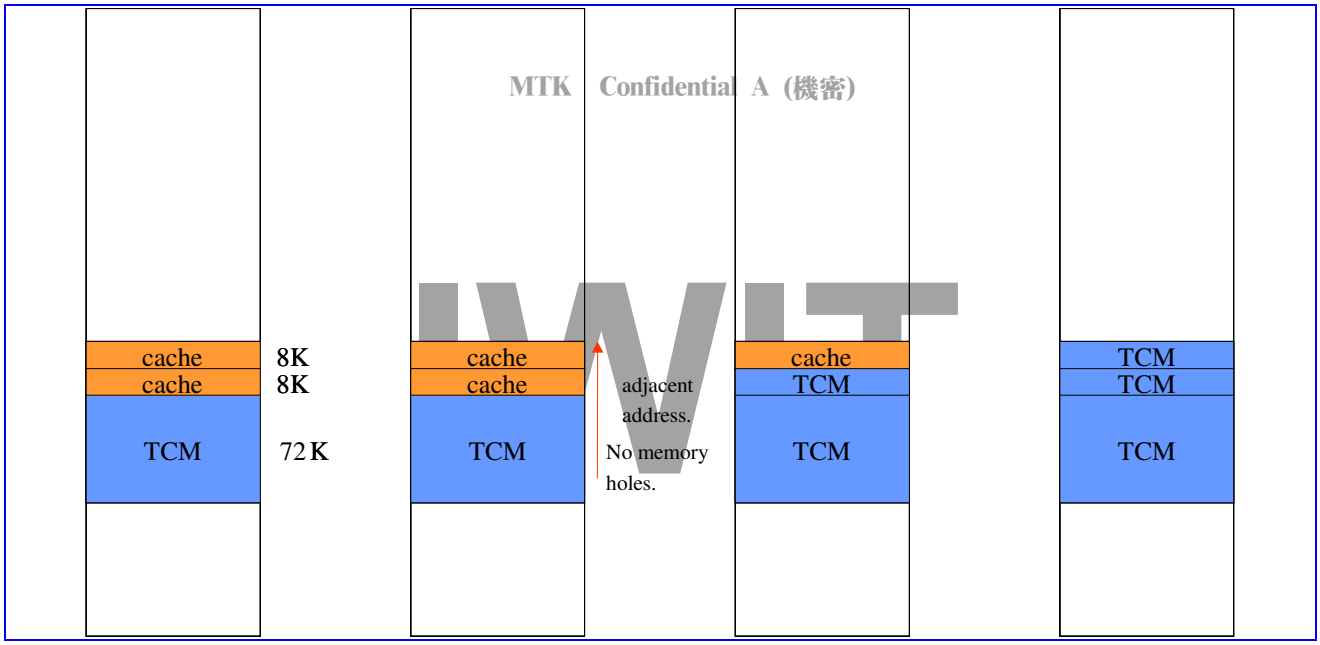

Figure 22 Memory mapping of TCM and cache

In Figure 22, MCU could only access TCM explicitly. Cache is transparent to MCU.

3.6.2 Organization of Cache

The cache system has the following features:

- Write through (no write allocation)
- Configurable 1/2 way set associative (8K/16K)
- Each way has 256 cache lines with 8 word line size (256*8*4=8KB)
- 19-bit tag address and 1 valid bit for each cache line.

One way of cache comprises of two memory: tag memory and data memory. Tag memory stores each line's valid bit, dirty bit and tag (upper part of address). Data memory stores line data. When MCU accesses memory, the address is compared to the contents of tag memory. First the line index (address bit [12:5]) is used to locate a line, and then the tag of the line is compared to upper part of address (bit [31:13]). If two parts match and valid bit is 1, it is said a cache hit and data from that particular way is sent back to MCU. This process is illustrated in the following figure:

MTK Confidential A (機密)
聯發機密不得洩漏
MTK CONFIDENTIAL
NO DISCLOSURE
IWIT

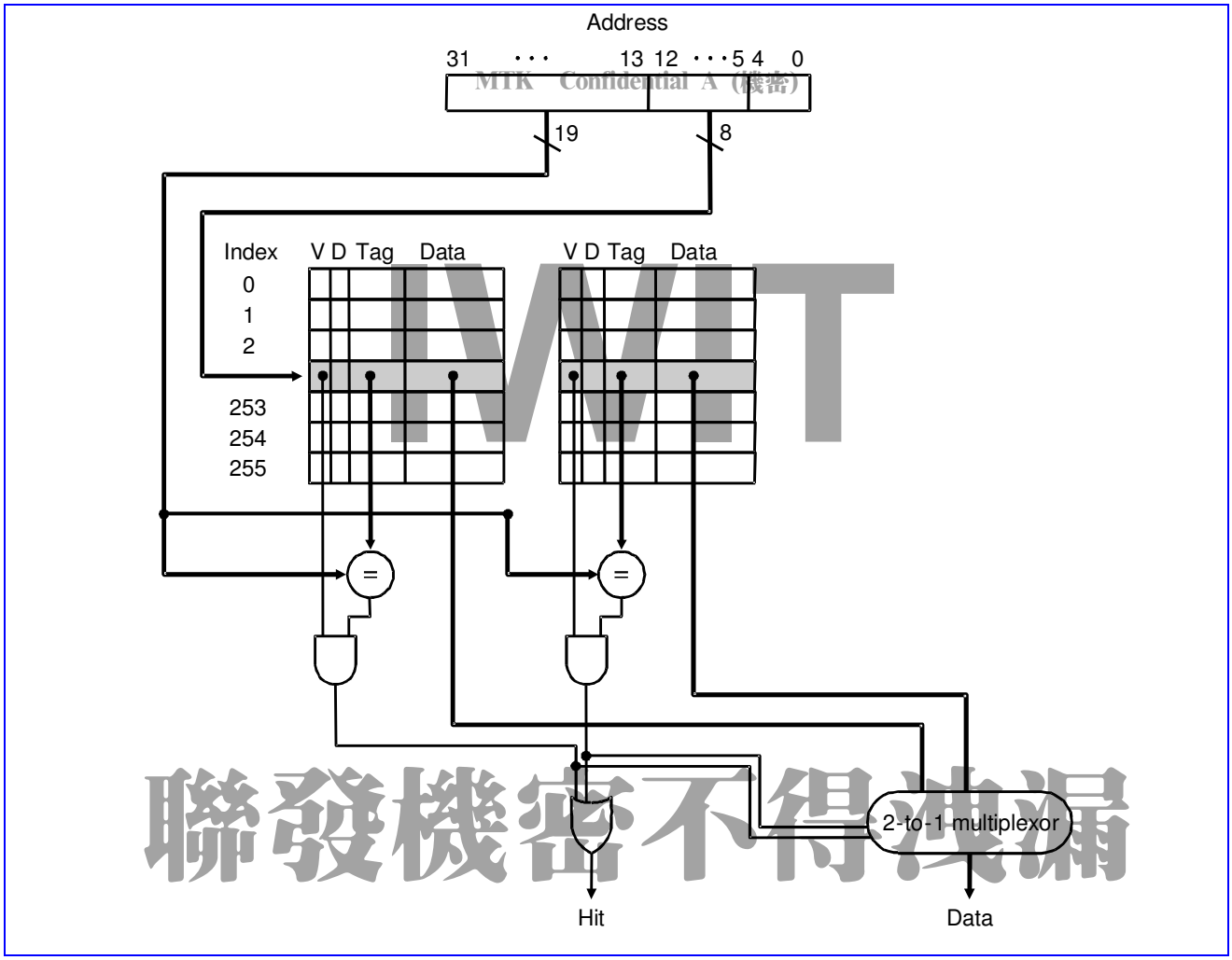

Figure 23 Tag comparison of 2-way cache

If most memory accesses are cache hit, MCU could get data immediately without wait states and the overall system performance is higher. There are several factors that may affect cache hit rate:

- Cache size and the organization

  The larger the cache size is, the higher the hit rate is. But the hit rate starts to saturate when cache size is larger than a threshold size. Normally the size of 16KB and above and two or four way can achieve a good hit rate.

- Program behavior

  If the system has several numbers of tasks that switch fast, it may cause cache contents to flush frequently. Because each time a new task is run, the cache will hold its data after some time. If next task uses data in the memory that occupy the same cache entries as previous task, it will cause cache contents to be flushed to store data of the new task. Interrupts also cause program flow to change dynamically. The interrupt handler code itself and the data it processes may cause cache to flush some data used by current task. Thus after exiting interrupt handler and returning to current task, the flushed data may need to be filled to cache again, resulting performance degradation.

To help software engineer tune system performance, the cache controller in MT6225 records the numbers of cache hit count and cacheable memory accesses. Cache hit rate can be obtained from these two numbers.

The cache sub system also has a module called MPU (memory protection unit). MPU can prevent illegal memory accesses and specify which memory region is cacheable or non-cacheable. Two fields in CACHE_CON register control

MTK Confidential A (機密)
聯發機密不得洩漏
MTK CONFIDENTIAL
NO DISCLOSURE
IWIT

the enable of MPU functions. MPU has its own registers to define memory region and associated regions. These settings only take effect after the enable bits in CACHE_CON are set to 1. For more details on the settings, please refer to MPU part of the specification.

MTK Confidential A (機密)

3.6.3 Cache Operations

Upon power on, cache memory contains random numbers and can't be used by MCU. Therefore MCU must have some means to "clean" cache memory before enabling them. Both above cases need a mechanism for MCU to perform operations on cache. The cache controller provides a register which, when written, could do operations on cache memory. These are called cache operations, including

- Invalidate one cache line

  The user must give a memory address. If it is found within cache, that particular line is invalidated (clear valid bit to 0). Alternatively, the user can specify which set/way of cache to be invalidated.

- Invalidate all cache lines

  The user needs not to specify an address. The cache controller hardware automatically clears valid bits in each tag memory.

3.6.4 Cache Controller Register Definition

CACHE base address is assumed 0x80700000 (subject to change).

CACHE+00h Cache General Control Register CACHE_CON

Bit	15	14	13	12	11	10	9	8	7	6	5	4	3	2	1	0
Name							CACHESIZE						CNTEN1	CNTEN0	MPEN	MCEN
Type							RW						RW	RW	R/W	R/W
Reset							00						0	0	0	0

This register determines the cache size, cache hit counter and the enable of MPU.

CACHESIZE Cache Size Select

- **00** no cache (88KB TCM)
- **01** 8KB, 1-way cache (80KB TCM)
- **10** 16KB, 2-way cache (72KB TCM)

CNTEN1 Enable cache hit counter 1

If enabled, cache controller will increase a 48-bit counter each time a cache hit occurs. This number can provide a reference of performance measurement for tuning of application programs. This counter increments only when the cacheable information is from MPU cacheable region 4~7.

- **0** disable
- **1** enable

CNTEN0 Enable cache hit counter 0

If enabled, cache controller will increase a 48-bit counter each time a cache hit occurs. This number can provide a reference of performance measurement for tuning of application programs. This counter increments only when the cacheable information is from MPU cacheable region 0~3.

- **0** disable
- **1** enable

MPEN Enable MPU comparison of read/write permission setting

If disabled, MCU could access any memory without any restriction. If enabled, MPU would compare the address of MCU to its setting. If an address falls into a restricted region, MPU would stop this memory access and send "ABORT" signal to MCU. Please refer to MPU part of the specification for more details.

IWIT 聯發科技股份有限公司 MTK CONFIDENTIAL NO DISCLOSURE IWIT

0 disable

1 enable

MTK Confidential A (機密)

MCEN Enable MPU comparison of cacheable/non-cacheable setting

If disabled, MCU memory accesses are all non-cacheable, i.e., they will go through AHB bus (except for TCM). If enabled, the setting in MPU will take effect. If MCU accesses a cacheable memory region, the cache controller will return the data in cache if it's found in cache, and will get the data through AHB bus only if a cache miss occurs. Please refer to MPU part of the specification for more details.

0 disable

1 enable

IWIT

CACHE+04h Cache Operation CACHE_OP

Bit	31	30	29	28	27	26	25	24	23	22	21	20	19	18	17	16
Name	TADDR[31:16]															
Type	R/W															
Reset	0															
Bit	15	14	13	12	11	10	9	8	7	6	5	4	3	2	1	0
Name	TADDR[15:5]											OP[3:0]				EN
Type	R/W											W				W1
Reset	0											0				0

This register defines the address and/or which kinds of cache operations to be taken. When MCU writes this register, the pipeline of MCU will be stopped for the cache controller to complete the operation. Bit 0 of the register must be written 1 to enable the command.

TADDR[31:5] Target Address

This field contains the address of invalidation operation. If OP[3:0]=0010, TADDR[31:5] is the address[31:5] of a memory whose line will be invalidated if it exists in the cache. If OP[3:0]=0100, TADDR[12:5] indicates the set, while TADDR[19:16] indicates which way to clear:

聯發機密不得洩漏

0001 way #0

0010 way #1

0100 way #2

1000 way #3

MTK CONFIDENTIAL

OP[3:0] Operation

This field determines which cache operations will be performed.

0001 invalidate all cache lines

0010 invalidate one cache line using address

0100 invalidate one cache line using set/way

NO DISCLOSURE

EN Enable command

This enable bit must be written 1 to enable the command.

1 enable

0 not enable

CACHE+08h Cache Hit Count 0 Lower Part CACHE_HCNT0L

Bit	31	30	29	28	27	26	25	24	23	22	21	20	19	18	17	16
Name	CHIT_CNT0[31:16]															
Type	R/W															
Reset	0															
Bit	15	14	13	12	11	10	9	8	7	6	5	4	3	2	1	0
Name	CHIT_CNT0[15:0]															
Type	R/W															
Reset	0															

IWIT

CACHE+0Ch Cache Hit Count 0 Upper Part

CACHE_HCNT0U

MTK Confidential A (機密)

Bit	31	30	29	28	27	26	25	24	23	22	21	20	19	18	17	16
Name	RESERVED															
Type																
Reset																
Bit	15	14	13	12	11	10	9	8	7	6	5	4	3	2	1	0
Name	CHIT_CNT0[47:32]															
Type	R/W															
Reset	0															

When CNTEN0 bit in CACHE_CON register is set to 1 (enabled), this register starts to record cache hit count until it is disabled. If the value increases to over maximum value (0xffffffffffff), it will be rolled over to 0 and continue counting. The 48 bit counter can provide a recording time of 31 days even if MCU runs at 104MHz and every cycle is a cache hit.

Note that before enabling the counter, it is recommended to write the initial value of zero to the counter.

CHIT_CNT0[47:0] Cache Hit Count 0

WRITE writing any value to CACHE_HCNT0L or CACHE_HCNT0U clears CHIT_CNT0 to all zeros

READ current counter value

CACHE+10h Cacheable Access Count 0 Lower Part

CACHE_CCNT0L

Bit	31	30	29	28	27	26	25	24	23	22	21	20	19	18	17	16
Name	CACC_CNT0[31:16]															
Type	R/W															
Reset	0															
Bit	15	14	13	12	11	10	9	8	7	6	5	4	3	2	1	0
Name	CACC_CNT0[15:0]															
Type	R/W															
Reset	0															

聯發機密不得洩漏
MTK CONFIDENTIAL

CACHE+14h Cacheable Access Count 0 Upper Part

CACHE_CCNT0U

Bit	31	30	29	28	27	26	25	24	23	22	21	20	19	18	17	16
Name	RESERVED															
Type																
Reset																
Bit	15	14	13	12	11	10	9	8	7	6	5	4	3	2	1	0
Name	CACC_CNT0[47:32]															
Type	R/W															
Reset	0															

NO DISCLOSURE

When CNTEN0 bit in CACHE_CON register is set to 1 (enabled), this register is incremented at each cacheable memory access (no matter it's a cache miss or a cache hit). If the value increases to over maximum value (0xffffffffffff), it will be rolled over to 0 and continue counting. For 104MHz MCU speed, if all memory accesses are cacheable and cache hit, this counter will overflow after (2^48) * 9.6ns = 31 days. This is the shortest time for the counter to overflow. In a more realistic case, the system will have cache misses, non-cacheable accesses, idle mode that makes the counter overflow at later time.

CACC_CNT0[47:0] Cache Access Count 0

WRITE writing any value to CACHE_CCNT0L or CACHE_CCNT0U clears CACC_CNT0 to all zeros

READ current counter value

IWIT

The best way to use CACHE_HCNT0 and CACHE_CCNT0 is to set zero as initial value in both registers, enable both counters (set CNTEN0 to 1), run a portion of program to be benchmarked, stop the counters and get their values. Therefore during this period

MTK Confidential A (機密)

$$Cache\ hit\ rate = \frac{CACHE_HCNT}{CACHE_CCNT} \times 100\% .$$

The cache hit rate value may help tune the performance of application program.

Note that CHIT_CNT0 and CACC_CNT0 only increment if the cacheable attribute is defined in MPU cacheable region 0~3.

IWIT

CACHE+18h Cache Hit Count 1 Lower Part

CACHE_HCNT1L

Bit	31	30	29	28	27	26	25	24	23	22	21	20	19	18	17	16
Name	CHIT_CNT1[31:16]															
Type	R/W															
Reset	0															
Bit	15	14	13	12	11	10	9	8	7	6	5	4	3	2	1	0
Name	CHIT_CNT1[15:0]															
Type	R/W															
Reset	0															

CACHE+1Ch Cache Hit Count 1 Upper Part

CACHE_HCNT1U

嚴密機密不得洩漏

Bit	31	30	29	28	27	26	25	24	23	22	21	20	19	18	17	16
Name	RESERVED															
Type																
Reset																
Bit	15	14	13	12	11	10	9	8	7	6	5	4	3	2	1	0
Name	CHIT_CNT1[47:32]															
Type	R/W															
Reset	0															

MTK CONFIDENTIAL

When CNTEN1 bit in CACHE_CON register is set to 1 (enabled), this register starts to record cache hit count until it is disabled. If the value increases to over maximum value (0xffffffffffff), it will be rolled over to 0 and continue counting. The 48 bit counter can provide a recording time of 31 days even if MCU runs at 104MHz and every cycle is a cache hit.

Note that before enabling the counter, it is recommended to write the initial value of zero to the counter.

NO DISCLOSURE

CHIT_CNT1[47:0] Cache Hit Count

WRITE writing any value to CACHE_HCNT1L or CACHE_HCNT1U clears CHIT_CNT1 to all zeros

READ current counter value

CACHE+20h Cacheable Access Count 1 Lower Part

CACHE_CCNT1L

Bit	31	30	29	28	27	26	25	24	23	22	21	20	19	18	17	16
Name	CACC_CNT1[31:16]															
Type	R/W															
Reset	0															
Bit	15	14	13	12	11	10	9	8	7	6	5	4	3	2	1	0
Name	CACC_CNT1[15:0]															
Type	R/W															
Reset	0															

IWIT

CACHE+24h Cacheable Access Count 1 Upper Part — CACHE_CCNT1U

MTK Confidential A (機密)

Bit	31	30	29	28	27	26	25	24	23	22	21	20	19	18	17	16
Name	RESERVED															
Type																
Reset																
Bit	15	14	13	12	11	10	9	8	7	6	5	4	3	2	1	0
Name	CACC_CNT1[47:32]															
Type	R/W															
Reset	0															

When CNTEN1 bit in CACHE_CON register is set to 1 (enabled), this register is incremented at each cacheable memory access (no matter it's a cache miss or a cache hit). If the value increases to over maximum value (0xffffffffffff), it will be rolled over to 0 and continue counting. For 104MHz MCU speed, if all memory accesses are cacheable and cache hit, this counter will overflow after (2^48) * 9.6ns = 31 days. This is the shortest time for the counter to overflow. In a more realistic case, the system will have cache misses, non-cacheable accesses, idle mode that makes the counter overflow at later time.

CACC_CNT1[47:0] Cache Access Count 1

WRITE writing any value to CACHE_CCNT1L or CACHE_CCNT1U clears CACC_CNT1 to all zeros

READ current counter value

The best way to use CACHE_HCNT1 and CACHE_CCNT1 is to set zero as initial value in both registers, enable both counters (set CNTEN1 to 1), run a portion of program to be benchmarked, stop the counters and get their values. Therefore during this period

聯發機密不得洩漏

$$Cache\ hit\ rate = \frac{CACHE_HCNT}{CACHE_CCNT} \times 100\% .$$

The cache hit rate value may help tune the performance of application program.

Note that CHIT_CNT1 and CACC_CNT1 only increment if the cacheable attribute is defined in MPU cacheable region 4~7.

MTK CONFIDENTIAL

3.7 MPU

3.7.1 General Description

NO DISCLOSURE

The purpose of MPU is to provide protection mechanism and cacheable indication of memory. The planned features of MPU include

- 8-entry protection settings.

  Determine if MCU can read/write a memory region. If the setting doesn't allow MCU's particular access to a memory address, MPU will stop the memory access and issue "ABORT" signal to MCU, making it entering into "abort" mode. The exception handler must then process the situation.

- 8-entry cacheable settings.

  Determine a memory region is cacheable or not. If cacheable, MCU will keep a small copy in its cache after read accesses. If MCU requires the same data later, it can get it from the high-speed local copy, instead of from low-speed external memory.

IWIT

Normally the protection and cacheable attributes are combined together for the same address range, as in the example of ARM946E. For greater flexibility, the MPU in MT6225 provides independent protection and cacheable settings. That

is to say, the memory regions defined for memory protection and for cacheable are different and independent of each other.

MTK Confidential A (機密)

The 4GB memory space is divided to 16 memory blocks of 256MB size, i.e., MB0~MB15. EMI takes MB0~MB3, SYSRAM takes MB4, IDMA uses MB5, peripherals and other hardware take MB6~MB9, TCM (tightly-coupled memory used by MCU exclusively) uses MB10. The characteristics of these memory blocks are listed below:

- Read/write protection setting

  MB5 and above (except MB10) are always readable/writeable.

  MB0~MB4 and MB10 are determined by MPU.

- Cacheable setting

  MB4 and above are always non-cacheable.

  MB0~MB3 are determined by MPU.

3.7.2 Protection Settings

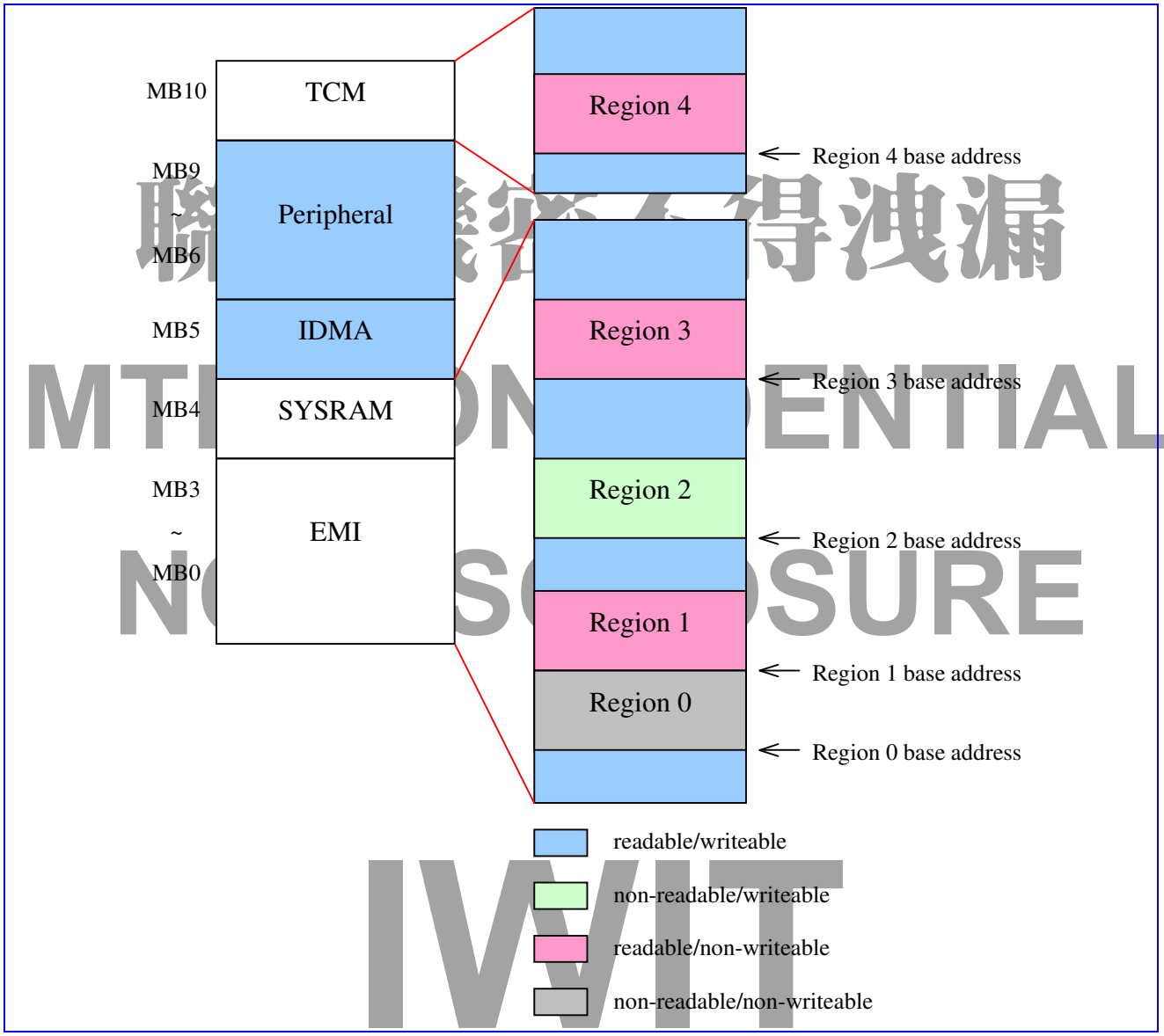

Figure 24 Protection setting

Figure 24 shows the protection setting in each memory block. Five regions are defined in the figure. Note that each region can be continuous or non-continuous to each other, and those address ranges not covered by any region are set to be readable/writeable automatically. One restriction exists: different regions must not overlap.

MTK Confidential A (機密)

The user can define maximum 8 regions in MB0~MB4 and MB10. Each region has its own setting defined in a 32-bit register:

31 … 10	7	6 5	1	0
base address	00	prot	size	EN

- Region base address (22 bits)
- Region size (5 bits)
- Region protection attribute (2 bits)
- Enable bit (1 bit)

MPU will abort MCU if it accesses MB11~MB15 regions.

3.7.2.1 Region base address

Region base address defines the start of the memory region. The user needs only to specify several upper address bits. The number of valid address bits depends on the region size. The user must align the base address to a region-size boundary. For example, if a region size is 8KB, its base address must be a multiple of 8KB.

聯發機密不得洩漏

3.7.2.2 Region size

The bit encoding of region size and its relationship with base address are listed as follows.

MTK CONFIDENTIAL
NO DISCLOSURE

Region size	Bit encoding	Base address
1KB	00000	Bit [31:10] of region start address
2KB	00001	Bit [31:11] of region start address
4KB	00010	Bit [31:12] of region start address
8KB	00011	Bit [31:13] of region start address
16KB	00100	Bit [31:14] of region start address
32KB	00101	Bit [31:15] of region start address
64KB	00110	Bit [31:16] of region start address
128KB	00111	Bit [31:17] of region start address
256KB	01000	Bit [31:18] of region start address
512KB	01001	Bit [31:19] of region start address
1MB	01010	Bit [31:20] of region start address
2MB	01011	Bit [31:21] of region start address
4MB	01100	Bit [31:22] of region start address
8MB	01101	Bit [31:23] of region start address
16MB	01110	Bit [31:24] of region start address

Table 16 Region size and bit encoding

3.7.2.3 Region protection attribute

This attribute has two bits. The MSB determines read access permission, and the LSB for write access permission.

Bit encoding	Permission

00	non-readable / non-writeable
10	readable / non-writeable
01	non-readable / writeable
11	readable / writeable

MTK Confidential A (機密)

Table 17 Region protection attribute bit encoding

Note that bit encoding “11” allows full read/write permission, which is the case when no region is specified. So it is recommended to only specify regions with protection attribute “00”, “10” or “01”.

3.7.3 Cacheable Settings

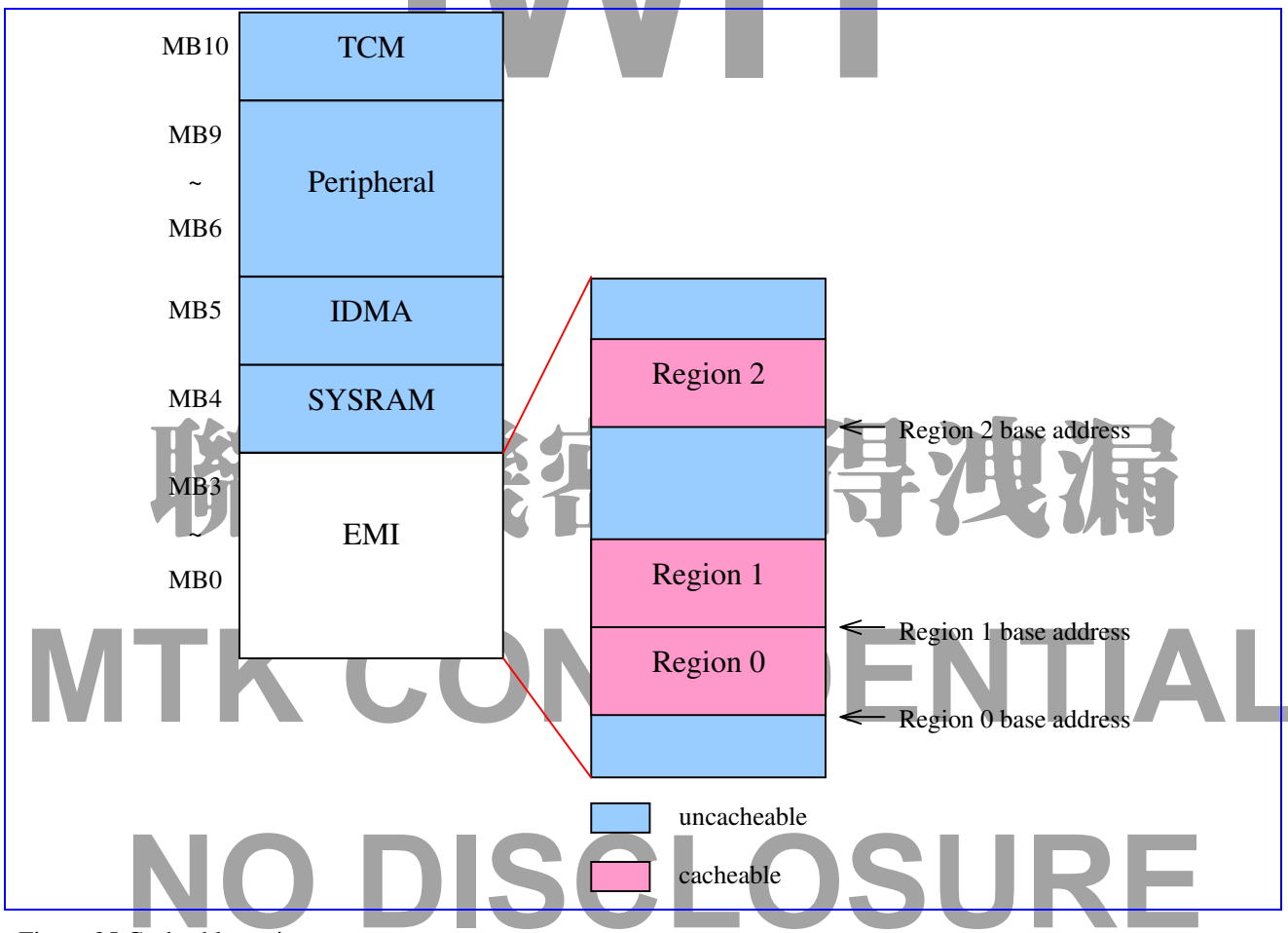

聯發科技機密 不得洩漏
MTK CONFIDENTIAL
NO DISCLOSURE

Figure 25 Cacheable setting

Figure 25 shows the cacheable setting in each memory block. Three regions are defined in the figure. Note that each region can be continuous or non-continuous to each other, and those address ranges not covered by any region are set to be uncacheable automatically. One restriction exists: different regions must not overlap.

The user can define maximum 8 regions in MB0~MB3. Each region has its own setting defined in a 32-bit register:

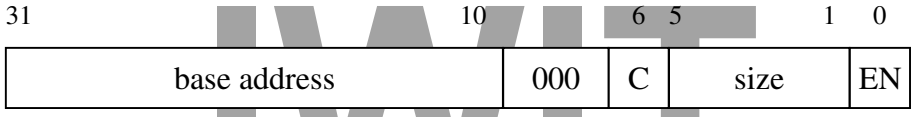

- Region base address (22 bits)
- Region size (5 bits)
- Region cacheable attribute (1 bit)

- Enable bit (1 bit)

The region base address and region size bit encoding are the same as those of protection setting. The user must also align the base address to a region-size boundary. The cacheable attribute has the following meaning.

MTK Confidential A (機密)

Bit encoding	Attribute
0	uncacheable
1	cacheable

Table 18 Region cacheable attribute bit encoding

IWIT

3.7.4 MPU Register Definition

MPU base address is assumed 0x80701000 (subject to change).

MPU+0000h Protection setting for region 0 MPU_PROT0

Bit	31	30	29	28	27	26	25	24	23	22	21	20	19	18	17	16
Name	BASEADDR[31:16]															
Type	R W															
Reset																
Bit	15	14	13	12	11	10	9	8	7	6	5	4	3	2	1	0
Name	BASEADDR[15:10]								ATTR[1:0]		SIZE[4:0]					EN
Type	R W								R W		R W					R W
Reset									11		00000					0

This register sets protection attributes for region 0.

聯發機密不得洩漏

BASEADDR Base address of this region

ATTR Protection attribute

- **00** non-readable / non-writeable
- **01** non-readable / writeable
- **10** readable / non-writeable
- **11** readable / writeable

MTK CONFIDENTIAL

SIZE size of this region

- **00000** 1KB
- **00001** 2KB
- **00010** 4KB
- **00011** 8KB
- **00100** 16KB
- **00101** 32KB
- **00110** 64KB
- **00111** 128KB
- **01000** 256KB
- **01001** 512KB
- **01010** 1MB
- **01011** 2MB
- **01100** 4MB
- **01101** 8MB
- **01110** 16MB

NO DISCLOSURE

EN enable this region

- **0** Disable
- **1** Enable

IWIT

MPU+0004h Protection setting for region 1 MPU_PROT1

Bit	31	30	29	28	27	26	25	24	23	22	21	20	19	18	17	16
Name	BASEADDR[31:16]															
Type	R W															
Reset																
Bit	15	14	13	12	11	10	9	8	7	6	5	4	3	2	1	0
Name	BASEADDR[15:10]								ATTR[1:0]		SIZE[4:0]					EN
Type	R W								R W		R W					R W
Reset									11		00000					0

This register sets protection attributes for region 1.

MPU+0008h Protection setting for region 2 MPU_PROT2

Bit	31	30	29	28	27	26	25	24	23	22	21	20	19	18	17	16
Name	BASEADDR[31:16]															
Type	R W															
Reset																
Bit	15	14	13	12	11	10	9	8	7	6	5	4	3	2	1	0
Name	BASEADDR[15:10]								ATTR[1:0]		SIZE[4:0]					EN
Type	R W								R W		R W					R W
Reset									11		00000					0

This register sets protection attributes for region 2.

MPU+000Ch Protection setting for region 3 MPU_PROT3

Bit	31	30	29	28	27	26	25	24	23	22	21	20	19	18	17	16
Name	BASEADDR[31:16]															
Type	R W															
Reset																
Bit	15	14	13	12	11	10	9	8	7	6	5	4	3	2	1	0
Name	BASEADDR[15:10]								ATTR[1:0]		SIZE[4:0]					EN
Type	R W								R W		R W					R W
Reset									11		00000					0

This register sets protection attributes for region 3.

MPU+0010h Protection setting for region 4 MPU_PROT4

Bit	31	30	29	28	27	26	25	24	23	22	21	20	19	18	17	16
Name	BASEADDR[31:16]															
Type	R W															
Reset																
Bit	15	14	13	12	11	10	9	8	7	6	5	4	3	2	1	0
Name	BASEADDR[15:10]								ATTR[1:0]		SIZE[4:0]					EN
Type	R W								R W		R W					R W
Reset									11		00000					0

This register sets protection attributes for region 4.

MPU+0014h Protection setting for region 5 MPU_PROT5

Bit	31	30	29	28	27	26	25	24	23	22	21	20	19	18	17	16
Name	BASEADDR[31:16]															
Type	R W															
Reset																
Bit	15	14	13	12	11	10	9	8	7	6	5	4	3	2	1	0
Name	BASEADDR[15:10]								ATTR[1:0]		SIZE[4:0]					EN
Type	R W								R W		R W					R W
Reset									11		00000					0

MTK Confidential A (聯發科)
IWIT
聯發機密 不得洩漏
MTK CONFIDENTIAL
NO DISCLOSURE
IWIT

This register sets protection attributes for region 5.

MTK Confidential A (機密)

MPU+0018h Protection setting for region 6 MPU_PROT6

Bit	31	30	29	28	27	26	25	24	23	22	21	20	19	18	17	16
Name	BASEADDR[31:16]															
Type	R W															
Reset																
Bit	15	14	13	12	11	10	9	8	7	6	5	4	3	2	1	0
Name	BASEADDR[15:10]								ATTR[1:0]		SIZE[4:0]					EN
Type	R W								R W		R W					R W
Reset									11		00000					0

This register sets protection attributes for region 6.

MPU+001Ch Protection setting for region 7 MPU_PROT7

Bit	31	30	29	28	27	26	25	24	23	22	21	20	19	18	17	16
Name	BASEADDR[31:16]															
Type	R W															
Reset																
Bit	15	14	13	12	11	10	9	8	7	6	5	4	3	2	1	0
Name	BASEADDR[15:10]								ATTR[1:0]		SIZE[4:0]					EN
Type	R W								R W		R W					R W
Reset									11		00000					0

This register sets protection attributes for region 7.

聯發機密不得洩漏

MPU+0040h Cacheable setting for region 0 MPU_CACHE0

Bit	31	30	29	28	27	26	25	24	23	22	21	20	19	18	17	16
Name	BASEADDR[31:16]															
Type	R W															
Reset																
Bit	15	14	13	12	11	10	9	8	7	6	5	4	3	2	1	0
Name	BASEADDR[15:10]									C	SIZE[4:0]					EN
Type	R W									R W	R W					R W
Reset										0	00000					0

This register sets cacheable attributes for region 0.

MTK CONFIDENTIAL

BASEADDR Base address of this region

C Cacheable attribute

- **0** uncacheable
- **1** cacheable

NO DISCLOSURE

SIZE size of this region

- **00000** 1KB
- **00001** 2KB
- **00010** 4KB
- **00011** 8KB
- **00100** 16KB
- **00101** 32KB
- **00110** 64KB
- **00111** 128KB
- **01000** 256KB
- **01001** 512KB
- **01010** 1MB

IWIT

01011 2MB
01100 4MB
01101 8MB
01110 16MB

MTK Confidential A (機密)

EN enable this region
0 Disable
1 Enable

MPU+0044h Cacheable setting for region 1 MPU_CACHE1

Bit	31	30	29	28	27	26	25	24	23	22	21	20	19	18	17	16
Name	BASEADDR[31:16]															
Type	R W															
Reset																
Bit	15	14	13	12	11	10	9	8	7	6	5	4	3	2	1	0
Name	BASEADDR[15:10]									C	SIZE[4:0]					EN
Type	R W									R W	R W					R W
Reset										0	00000					0

This register sets cacheable attributes for region 1.

MPU+0048h Cacheable setting for region 2 MPU_CACHE2

Bit	31	30	29	28	27	26	25	24	23	22	21	20	19	18	17	16
Name	BASEADDR[31:16]															
Type	R W															
Reset																
Bit	15	14	13	12	11	10	9	8	7	6	5	4	3	2	1	0
Name	BASEADDR[15:10]									C	SIZE[4:0]					EN
Type	R W									R W	R W					R W
Reset										0	00000					0

This register sets cacheable attributes for region 2.

MPU+004Ch Cacheable setting for region 3 MPU_CACHE3

Bit	31	30	29	28	27	26	25	24	23	22	21	20	19	18	17	16
Name	BASEADDR[31:16]															
Type	R W															
Reset																
Bit	15	14	13	12	11	10	9	8	7	6	5	4	3	2	1	0
Name	BASEADDR[15:10]									C	SIZE[4:0]					EN
Type	R W									R W	R W					R W
Reset										0	00000					0

This register sets cacheable attributes for region 3.

MPU+0050h Cacheable setting for region 4 MPU_CACHE4

Bit	31	30	29	28	27	26	25	24	23	22	21	20	19	18	17	16
Name	BASEADDR[31:16]															
Type	R W															
Reset																
Bit	15	14	13	12	11	10	9	8	7	6	5	4	3	2	1	0
Name	BASEADDR[15:10]									C	SIZE[4:0]					EN
Type	R W									R W	R W					R W
Reset										0	00000					0

This register sets cacheable attributes for region 4.

IWIT
聯發機密不得洩漏
MTK CONFIDENTIAL
NO DISCLOSURE
IWIT

MPU+0054h Cacheable setting for region 5 MPU_CACHE5

Bit	31	30	29	28	27	26	25	24	23	22	21	20	19	18	17	16
Name	BASEADDR[31:16]															
Type	R W															
Reset																
Bit	15	14	13	12	11	10	9	8	7	6	5	4	3	2	1	0
Name	BASEADDR[15:10]									C	SIZE[4:0]					EN
Type	R W									R W	R W					R W
Reset										0	00000					0

This register sets cacheable attributes for region 5.

MPU+0058h Cacheable setting for region 6 MPU_CACHE6

Bit	31	30	29	28	27	26	25	24	23	22	21	20	19	18	17	16
Name	BASEADDR[31:16]															
Type	R W															
Reset																
Bit	15	14	13	12	11	10	9	8	7	6	5	4	3	2	1	0
Name	BASEADDR[15:10]									C	SIZE[4:0]					EN
Type	R W									R W	R W					R W
Reset										0	00000					0

This register sets cacheable attributes for region 6.

MPU+005Ch Cacheable setting for region 7 MPU_CACHE7

Bit	31	30	29	28	27	26	25	24	23	22	21	20	19	18	17	16
Name	BASEADDR[31:16]															
Type	R W															
Reset																
Bit	15	14	13	12	11	10	9	8	7	6	5	4	3	2	1	0
Name	BASEADDR[15:10]									C	SIZE[4:0]					EN
Type	R W									R W	R W					R W
Reset										0	00000					0

This register sets cacheable attributes for region 7.

3.8 Internal Memory Interface

3.8.1 System RAM

MT6225 provides one 72K Bytes size of on-chip memory modules acting as System RAM for data access with low latency. Such a module is composed of one high speed synchronous SRAM with AHB Slave Interface connected to the system backbone AHB Bus, as shown in **Figure 26**. The synchronous SRAM operates on the same clock as the AHB Bus and is organized as 32 bits wide with 4 byte-write signals capable for byte operations. The SRAM macro has limited repair capability. The yield of SRAM is improved if the defects inside it can be repaired during testing.

3.8.2 System ROM

The 15K Bytes System ROM is primarily used to store software program for Factory Programming and security-related routines. This module is composed of high-speed ROM with an AHB Slave Interface connected to a system backbone AHB, shown in **Figure 26**. The module operates on the same clock as the AHB and has a 32-bit wide organization.

MTK Confidential A (機密)
IWIT
聯發機密不得洩漏
MTK CONFIDENTIAL
NO DISCLOSURE
IWIT

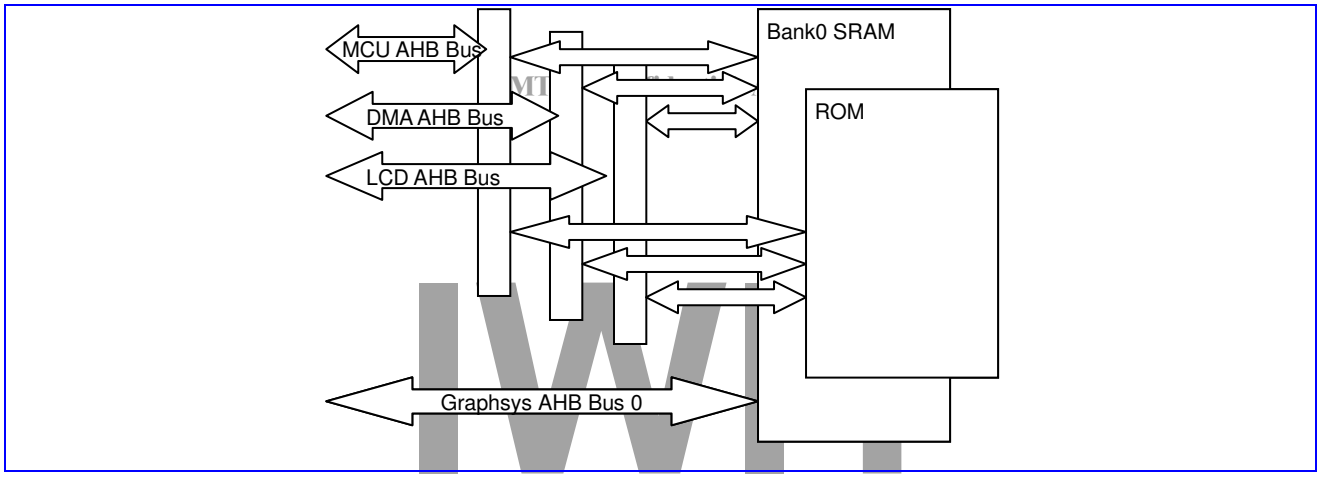

Figure 26: Block Diagram of the Internal Memory Controller

3.9 External Memory Interface

3.9.1 General Description

MT6225 incorporates a powerful and flexible memory controller, External Memory Interface, to connect with a variety of memory components. This controller provides one generic access scheme for Flash Memory, SRAM, PSRAM and CellularRAM and another access scheme for MobileRAM. Up to 3 memory banks can be supported simultaneously, BANK0-BANK2, with a maximum size of 64MB each.

Since most of the Flash Memory, SRAM, PSRAM and CellularRAM have similar AC requirements, a generic configuration scheme to interface them is desired. This way, the software program can treat different components by simply specifying certain predefined parameters. All these parameters are based on the cycle time of system clock.

The interface definition based on such a scheme is listed in **Table 19**. Note that, this interface always works with data in Little Endian format for all types of access.

Signal Name	Type	Description
EA[25:0]	O	Address Bus
ED[15:0]	I/O	Data Bus
EWR#	O	Write Enable Strobe/MobileRAM Command Input
ERD#	O	Read Enable Strobe
ELB#	O	Lower Byte Strobe/MobileRAM Data Input & Output Mask
EUB#	O	Upper Byte Strobe/MobileRAM Data Input & Output Mask
ECS[3:0]#	O	BANK0~BANK3 Selection Signal
EPDN	O	PSRAM Power Down Control Signal
ECLK	O	Flash, SRAM, PSRAM and CellularRAM Clock Signal
EADV#	O	Flash, SRAM, PSRAM and CellularRAM Address Valid Signal
EWAIT	I	Flash, SRAM, PSRAM and CellularRAM Wait Signal Input
EDCLK	O	MobileRAM Clock Signal
ECKE	O	MobileRAM Clock Enable Signal
ERAS#	O	MobileRAM Row Address Signal
ECAS#	O	MobileRAM Column Address Signal

Table 19 **External Memory Interface Signal of MT6225**

聯發機密不得洩漏
MTK CONFIDENTIAL
NO DISCLOSURE

REGISTER ADDRESS	REGISTER NAME	SYNONYM
EMI + 0000h	EMI Control Register for BANK0	EMI_CONA
EMI + 0008h	EMI Control Register for BANK1	EMI_CONB
EMI + 0010h	EMI Control Register for BANK2	EMI_CONC
EMI + 0040h	EMI Control Register 0 for MobileRAM	EMI_CONI
EMI + 0048h	EMI Control Register 1 for MobileRAM	EMI_CONJ
EMI + 0050h	EMI Control Register 2 for MobileRAM	EMI_CONK
EMI + 0058h	EMI Control Register 3 for MobileRAM	EMI_CONL
EMI + 0060h	EMI Remap Control Register	EMI_REMAP
EMI + 0068h	EMI General Control Register 0	EMI_GENA
EMI + 0070h	EMI General Control Register 1	EMI_GENB

Table 20 External Memory Interface Register Map

3.9.2 Register Definitions

EMI+0000h EMI Control Register for BANK 0 EMI_CONA

Bit	31	30	29	28	27	26	25	24	23	22	21	20	19	18	17	16
Name	C2WS			C2WH				C2RS			PRLT				CLKEN	PMODE
Type	R/W			R/W				R/W			R/W				R/W	R/W
Reset	0			0				0			0				0	0
Bit	15	14	13	12	11	10	9	8	7	6	5	4	3	2	1	0
Name	DW	RBLN	BW	WST					WAIT	PSIZE		RLT				
Type	R/W	R/W	R/W	R/W					R/W	R/W		R/W				
Reset	0	1	0	0					0	0		7				

EMI+0008h EMI Control Register for BANK 1 EMI_CONB

Bit	31	30	29	28	27	26	25	24	23	22	21	20	19	18	17	16
Name	C2WS			C2WH				C2RS			PRLT				CLKEN	PMODE
Type	R/W			R/W				R/W			R/W				R/W	R/W
Reset	0			0				0			0				0	0
Bit	15	14	13	12	11	10	9	8	7	6	5	4	3	2	1	0
Name	DW	RBLN	BW	WST					WAIT	PSIZE		RLT				
Type	R/W	R/W	R/W	R/W					R/W	R/W		R/W				
Reset	0	1	0	0					0	0		7				

EMI+0010h EMI Control Register for BANK 2 EMI_CONC

Bit	31	30	29	28	27	26	25	24	23	22	21	20	19	18	17	16
Name	C2WS			C2WH				C2RS			PRLT				CLKEN	PMODE
Type	R/W			R/W				R/W			R/W				R/W	R/W
Reset	0			0				0			0				0	0
Bit	15	14	13	12	11	10	9	8	7	6	5	4	3	2	1	0
Name	DW	RBLN	BW	WST					WAIT	PSIZE		RLT				
Type	R/W	R/W	R/W	R/W					R/W	R/W		R/W				
Reset	0	1	0	0					0	0		7				

For each bank (BANK0-BANK2), a dedicated control register is associated with the bank controller. These registers have timing parameters that help the controller to convert memory access into proper timing waveform. Note that,

MTK Confidential A (機密)
IWIT
聯發機密不得洩漏
MTK CONFIDENTIAL
NO DISCLOSURE
IWIT

except for parameters CLKEN, PMODE, DW, RBLN, BW, WAIT and PSIZE, all the other parameters specified explicitly are based on system clock speed in terms of cycle count.

MTK Confidential A (機密)

RLT Read Latency Time

Specifies the number of wait-states to insert in the bus transfer to the requesting agent. Such a parameter must be chosen carefully to meet the timing specification requirements for common parameter tACC(address access time) for asynchronous-read device and tCWT(chip select low to wait valid time) for synchronous-read device. An example is shown below.

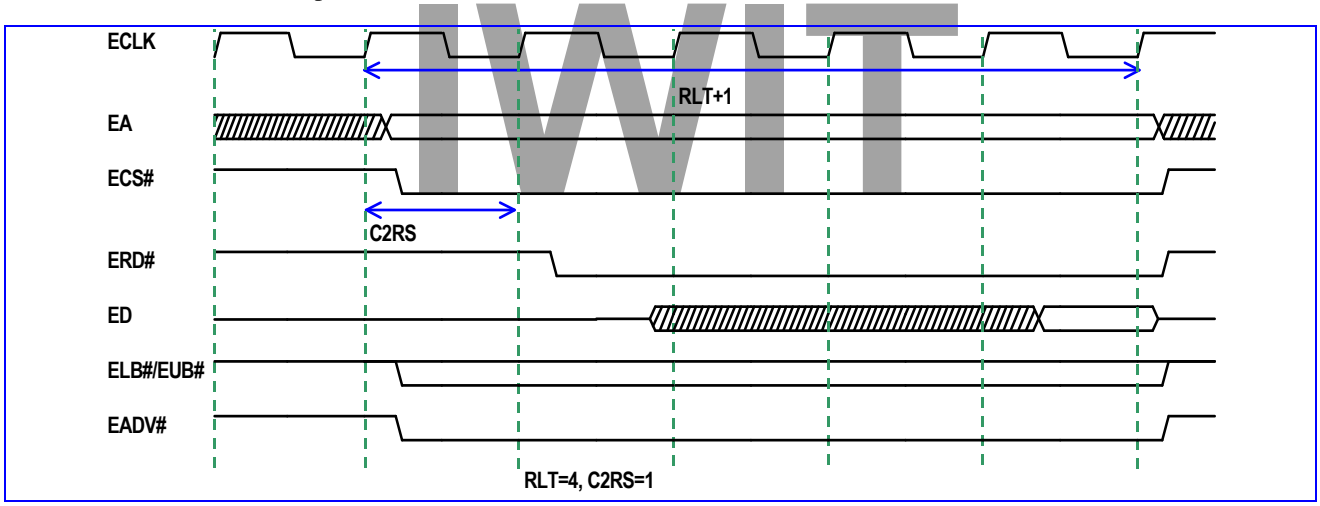

Figure 27 Read Wait State Timing Diagram for Asynchronous-Read Memory (CLKEN=0)

聯發機密不得洩漏

Access Time	Read Latency Time in 104 MHz unit
65 ns ~ 70 ns	7
85 ns ~ 90 ns	9
110 ns ~ 120 ns	12

Table 21 Reference value of Read Latency Time for Asynchronous-Read memory Devices

MTK CONFIDENTIAL

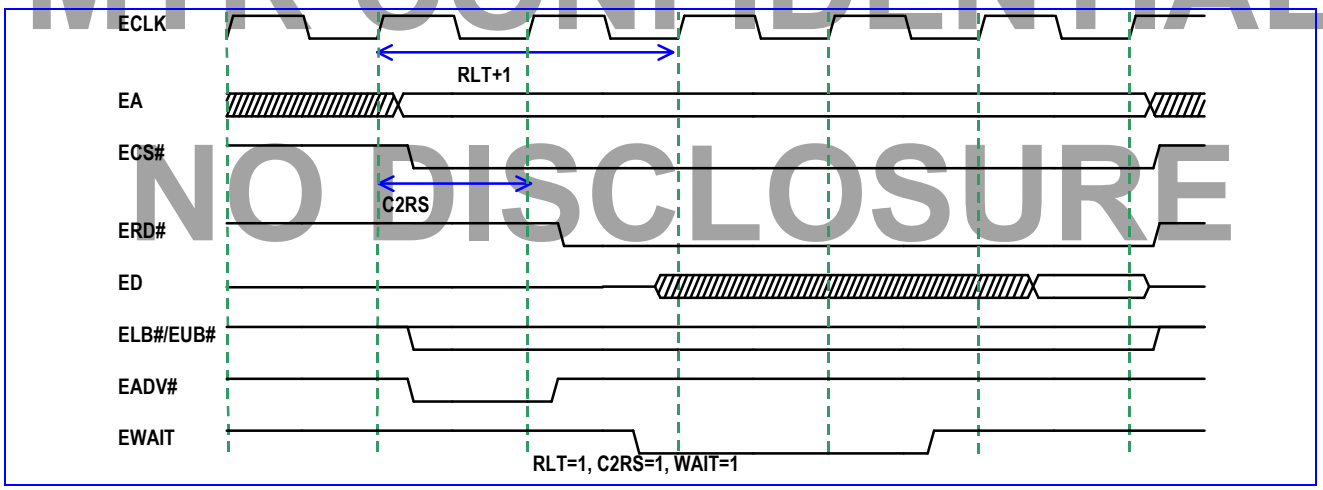

NO DISCLOSURE

Figure 28 Read Wait State Timing Diagram for Synchronous-Read Memory (CLKEN=1)

ECS# Low to EWAIT Valid	Read Latency Time in 104 MHz unit
0 ns ~ 10 ns	1
10 ns ~ 20 ns	2

Table 22 Reference value of Read Latency Time for Synchronous-Read Devices

PSIZE This bit position describes the page size behavior of that the Page Mode enabled device.

0 8 byte, EA[22:3] remains the same

1 16 byte, EA[22:4] remains the same

MTK Confidential A (機密)

WAIT Data-valid feedback operation control for Flash memory, PSRAM and CellularRAM.

0 Disable data-valid feedback operation control

1 Enable data-valid feedback operation control

WST Write Wait State

Specifies the parameters to extend adequate setup and hold time for target component in write operation. Such parameter must be chosen carefully to meet the timing specification requirements for common parameter tWC(write cycle time) for asynchronous-write device and tCWT(chip select low to wait valid time) for synchronous-write device. An example is shown in **Figure 29** and **Table 23**.

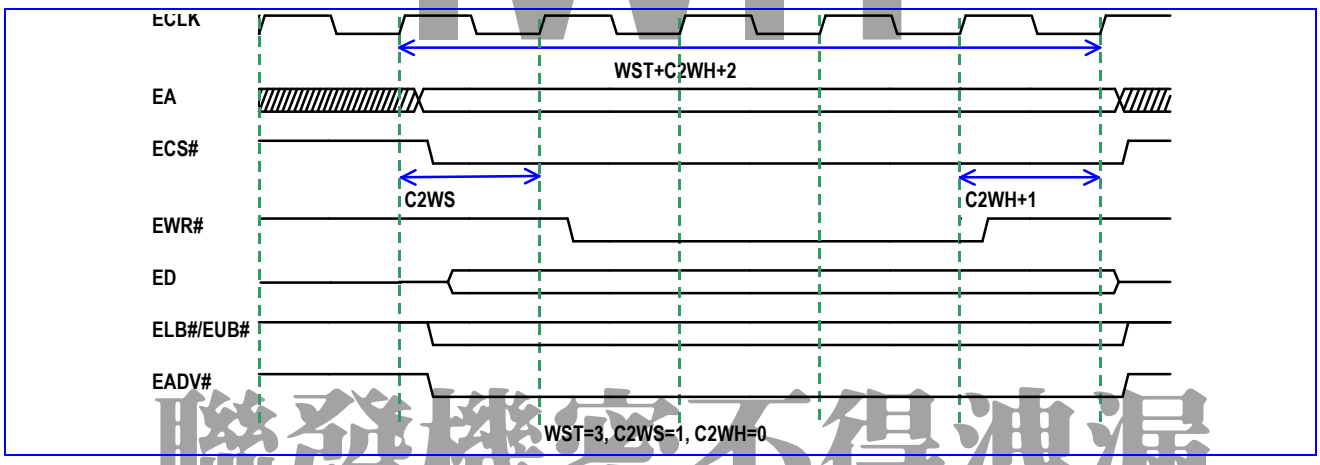

Figure 29 Write Wait State Timing Diagram for Asynchronous-Write Memory (BW=0)

Write Pulse Width (Write Data Setup Time)	Write Wait State in 104 MHz unit
65 ns ~ 70 ns	7
85 ns ~ 90 ns	9
110 ns ~ 120 ns	12

Table 23 Reference value of Write Wait State for Asynchronous-Write Devices

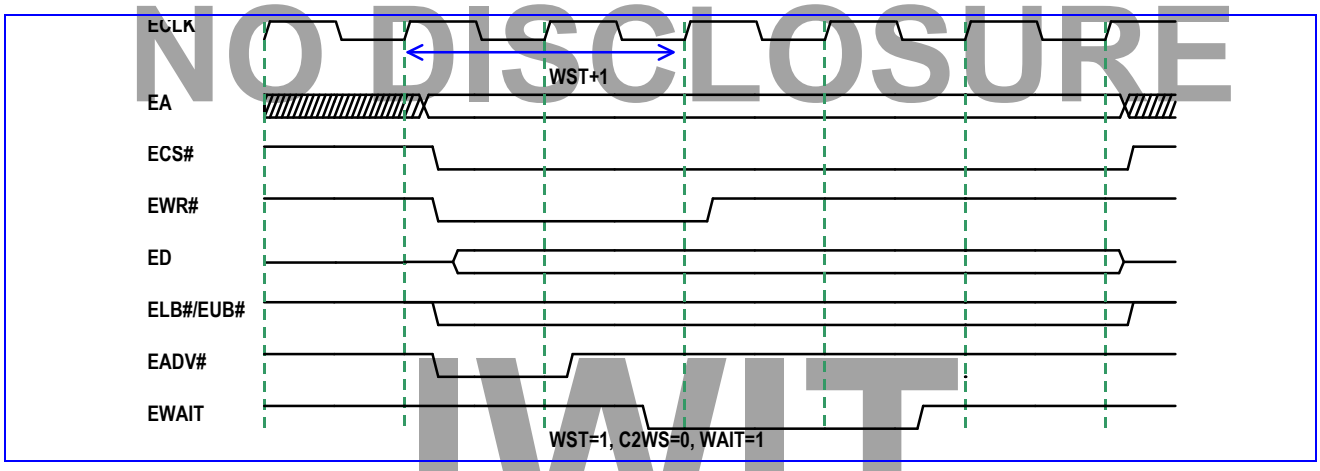

Figure 30 Write Wait State Timing Diagram for Synchronous-Write Memory (CLKEN=1 and BW=1)

ECS# Low to EWAIT Valid	Write Wait State in 104 MHz unit
0 ns ~ 10 ns	1

IWIT 聯發機密不得洩漏 MTK CONFIDENTIAL NO DISCLOSURE IWIT

10 ns ~ 20 ns	2

Table 24 Reference value of Write Wait State for Synchronous-Write Devices

MTK Confidential A (機密)

BW Burst Mode Write Control

- **0** Disable burst write operation
- **1** Enable burst write operation

RBLN Read Byte Lane Enable

DW Data Width

- **0** 16 Bit
- **1** 8 Bit

PMODE Page Mode Control

If the target device supports page mode operations, the Page Mode Control can be enabled. Read in Page Mode is determined by the set of parameters: PRLT and PSIZE.

- **0** disable page mode operation
- **1** enable page mode operation

PRLT Read Latency Time within the Same Page

Since page mode operation only helps to eliminate read latency in subsequent access within the same page, the initial latency does not matter. Thus, the memory controller must still adopt the RLT parameter for the initial read or reads between different pages, even if PMODE is set to 1.

CLKEN Clock Enable Control

C2RS Chip Select to Read Strobe Setup Time

C2WH Chip Select to Write Strobe Hold Time

C2WS Chip Select to Write Strobe Setup Time

聯發機密不得洩漏

EMI+0040h EMI Control Register 0 for MobileRAM EMI_CONI

Bit	31	30	29	28	27	26	25	24	23	22	21	20	19	18	17	16
Name							PAUSE_EN	PING PONG_EN	DRAM_MODE		DRAM_SIZE		DRAM_EN		DRAM_CS	
Type							R/W	R/W	R/W		R/W		R/W		R/W	
Reset							0	0	2d		0		0		0	
Bit	15	14	13	12	11	10	9	8	7	6	5	4	3	2	1	0
Name		BA1	BA0	A12	A11	A10	A9	A8	A7	A6	A5	A4	A3	A2	A1	A0
Type		R/W	R/W	R/W	R/W	R/W	R/W	R/W	R/W	R/W	R/W	R/W	R/W	R/W	R/W	R/W
Reset		0	0	0	0	0	0	0	0	0	0	0	0	0	0	0

MEDIATEK CONFIDENTIAL
NO DISCLOSURE

A12-A0 Mode Register Configuration

BA1-B0 Mode Register Configuration

DRAM_CS MobileRAM Controller Chip Select Signal Control

- **00** Chip Select 0 is used for MobileRAM
- **01** Chip Select 1 is used for MobileRAM
- **10** Chip Select 2 is used for MobileRAM

DRAM_EN MobileRAM Controller Control

- **0** MobileRAM controller is disabled
- **1** MobileRAM controller is enabled

DRAM_SIZE MobileRAM Chip Size

- **00** 64Mbit
- **01** 128Mbit
- **10** 256Mbit
- **11** 512Mbit

DRAM_MODE MobileRAM Scrambling Table Control

00 Mode 1
01 Mode 2
10 Mode 3 (PASR is not allowed)
11 Mode 4 (PASR is not allowed)

MTK Confidential A (機密)

PINGPONG_EN Ping-pong Operation Control

PAUSE_EN Self-Refresh Mode Control when Baseband is in Pause Mode Operation

EMI+0048h EMI Control Register 1 for MobileRAM EMI_CONJ

Bit	31	30	29	28	27	26	25	24	23	22	21	20	19	18	17	16
Name							PDNS	SRFS								
Type							R	R								
Reset							0	0								
Bit	15	14	13	12	11	10	9	8	7	6	5	4	3	2	1	0
Name							PDN	SRF						SETM	AREF	PCA
Type							R/W	R/W						R/W	R/W	R/W
Reset							0	0						0	0	0

PCA Pre-Charge All Command
AREF Auto-Refresh Command
SETM Set Mode Register Command
SRF Self-Refresh Mode Command
PDN Power-Down Mode Command
SRFS Self-Refresh Mode Status
PDNS Power Down Mode Status

聯發機密不得洩漏

EMI+0050h EMI Control Register 2 for MobileRAM EMI_CONK

Bit	31	30	29	28	27	26	25	24	23	22	21	20	19	18	17	16
Name	WR		RAS_MAX													
Type	R/W		R/W													
Reset	0		0													
Bit	15	14	13	12	11	10	9	8	7	6	5	4	3	2	1	0
Name	RAS_MIN				RRD		RC			RP		RCD				CAS
Type	R/W				R/W		R/W			R/W		R/W				R/W
Reset	0				0		0			0		0				0

MTK CONFIDENTIAL

CAS CAS Latency Control
0 CAS Latency = 2
1 CAS Latency = 3

NO DISCLOSURE

RCD Active to Read or Write Delay
RP Pre-charge Command Period
RC Active Bank A to Active Bank A Period
RRD Active Bank A to Active Bank B Delay
RAS_MIN Minimum Active to Pre-charge Command Delay
RAS_MAX Maximum Active to Pre-charge Command Delay
WR Write Recovery Time

EMI+0058h EMI Control Register 3 for MobileRAM EMI_CONL

Bit	31	30	29	28	27	26	25	24	23	22	21	20	19	18	17	16
Name	ARFEN				HYE							REFCNT			DIV	
Type	R/W				R/W							R/W			R/W	
Reset	0				0							0			0	
Bit	15	14	13	12	11	10	9	8	7	6	5	4	3	2	1	0
Name	ISR				MRD				XSR				RFC			
Type	R/W				R/W				R/W				R/W			

Reset	0	0	0	0

RFC Auto Refresh Period

MTK Confidential A (機密)

XSR Exit Self Refresh to Active Command Delay

MRD Load Mode Register Command Period

ISR Minimum Period for Self-Refresh Mode

DIV MobileRAM Refresh Period Pre-Divider in units of 32 KHz; this field defines the MobileRAM Refresh Period.

- **00** Divide by 1 (32KHz)
- **01** Divide by 2 (32KHz/2)
- **10** Divide by 3 (32KHz/3)
- **11** Divide by 4 (32KHz/4)

REFCNT Number of Auto-Refresh-Command to issue per MobileRAM Refresh Period.

HYE Reserved

ARFEN Auto Refresh Control

EMI+0060h EMI Re-map Control Register EMI_REMAP

Bit	15	14	13	12	11	10	9	8	7	6	5	4	3	2	1	0
Name															RM1	RM0
Type															R/W	R/W
Reset															0	0

This register accomplishes the Memory Re-mapping Mechanism. The register provides the kernel software program or system designer with the capability to change memory configuration dynamically. Three kinds of configuration are permitted.

聯發機密不得洩漏

RM[1:0] Re-mapping control for Boot Code, BANK0 and BANK1, refer to **Table 25**.

RM[1:0]	Address 0000_0000h – 07ff_ffffh	Address 0800_0000h – 0fff_ffffh
00	Boot Code	BANK1
01	BANK1	BANK0
10	BANK0	BANK1
11	BANk1	BANK0

Table 25 Memory Map Configuration

MTK CONFIDENTIAL
NO DISCLOSURE

EMI+0068h EMI General Control Register 0 EMI_GENA

Bit	31	30	29	28	27	26	25	24	23	22	21	20	19	18	17	16
Name	CKE	EXT_GUARD		DCKSR	DCKE2	DCKE4	DCKE8		DCKE		DCKDLY					
Type	R/W	R/W		R/W	R/W	R/W	R/W		R/W		R/W					
Reset	0	0		0	0	0	0		0		0					
Bit	15	14	13	12	11	10	9	8	7	6	5	4	3	2	1	0
Name	EDA	PDNE	WPOL	SCKSR	SCKE2	SCKE4	SCKE4		SCKE		SCKDLY					
Type	R/W	R/W	R/W	R/W	R/W	R/W	R/W		R/W		R/W					
Reset	1	0	0	0	0	0	0		0		0					

SCKDLY FLASH, SRAM, PSRAM and CellularRAM Clock Delay Control

SCKE FLASH, SRAM, PSRAM and CellularRAM Clock Enable Control

SCKEn FLASH, SRAM, PSRAM and CellularRAM Clock Pad Driving Control (n=2, 4, 8, 16)

SCKSR FLASH, SRAM, PSRAM and CellularRAM Pad Slew-Rate Control

WPOL FLASH, SRAM, PSRAM and CellularRAM Wait Signal Inversion Control

PDNE PSRAM Power Down Control

EDA Data Bus Active Drive Control

DCKDLY MobileRAM Clock Delay Control

DCKE MobileRAM Clock Enable Control MTK Confidential A (機密)

DCKEn MobileRAM Clock Pad Driving Control (n=2, 4, 8)

DCKSR MobileRAM Clock Pad Slew-Rate Control

EXT_GUARD Extra IDLE Time for FLASH, SRAM, PSRAM and CellularRAM

CKE Dynamic MobileRAM Clock Enable Control

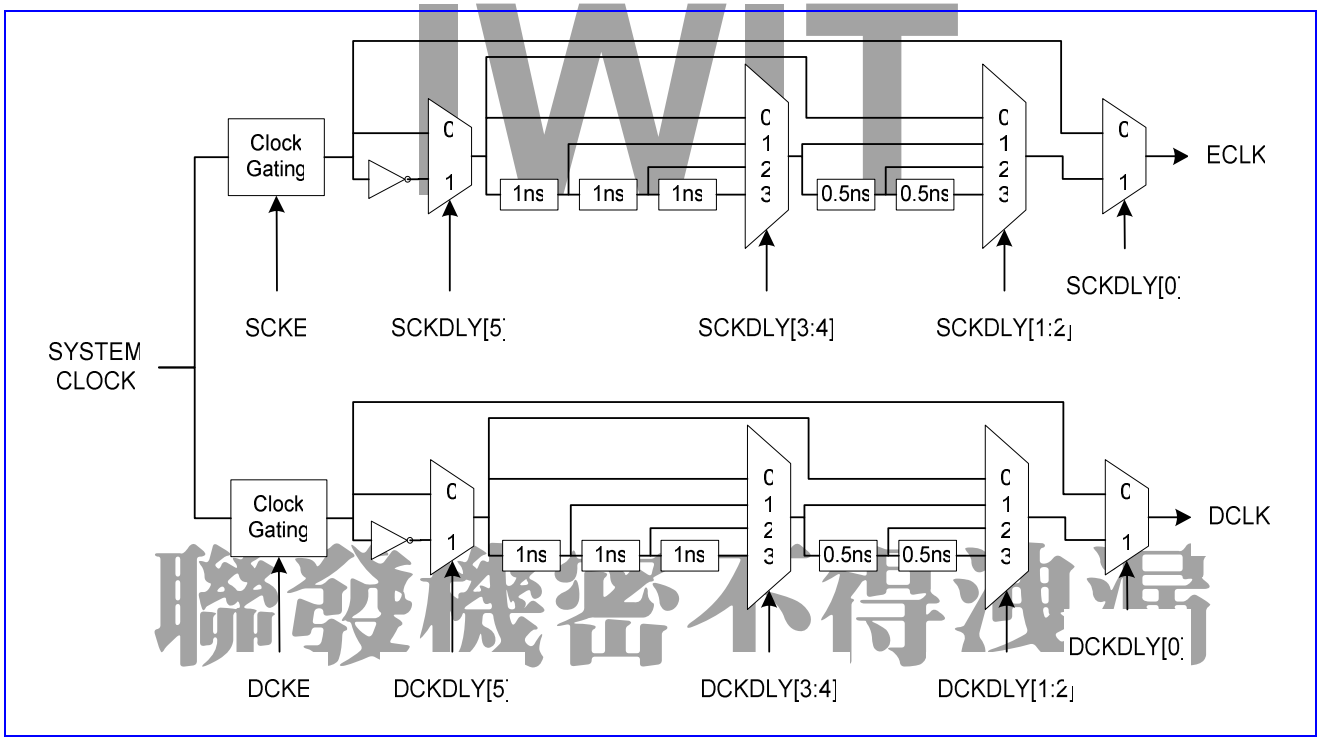

Figure 31 Clock Delay Control

聯發機密不得洩漏
MTK CONFIDENTIAL
NO DISCLOSURE
IWIT

EMI+0070h EMI General Control Register 1 EMI_GENB

Bit	31	30	29	28	27	26	25	24	23	22	21	20	19	18	17	16
Name		EASR	EAE2	EAE4	EAE8		EDSR	EDE2	EDE4	EDE8		ECSSR	ECSE2	ECSE4	ECSE8	
Type		R/W	R/W	R/W	R/W		R/W	R/W	R/W	R/W		R/W	R/W	R/W	R/W	
Reset		1	1	0	0		1	1	0	0		1	1	0	0	
Bit	15	14	13	12	11	10	9	8	7	6	5	4	3	2	1	0
Name		ERWSR	ERWE2	ERWE4	ERWE8		EADVSR	EADVE2	EADVE4	EADVE8		ERCSR	ERCE2	ERCE4	ERCE8	
Type		R/W	R/W	R/W	R/W		R/W	R/W	R/W	R/W		R/W	R/W	R/W	R/W	
Reset		1	1	0	0		1	1	0	0		1	1	0	0	

ERCEn RAS and CAS Pad Driving Control (n=2, 4, 8)

ERCSR RAS and CAS Pad Slew-Rate Control

EADVEn EADV Pad Driving Control (n=2, 4, 8)

EADVSR EADV Pad Slew-Rate Control

ERWEn ERD, EWR, EUB and ELB Pad Driving Control (n=2, 4, 8)

ERWSR ERD, EWR, EUB and ELB Pad Slew-Rate Control

ECSEn ECS[3:0] Pad Driving Control (n=2, 4, 8)

ECSSR ECS[3:0] Pad Slew-Rate Control

EDEn ED[15:0] Pad Driving Control (n=2, 4, 8)

EDSR ED[15:0] Pad Slew-Rate Control

EAEn EA[25:0] Pad Driving Control (n=2, 4, 8)

EASR EA[25:0] Pad Slew-Rate Control

MTK Confidential A (機密)

EMI+0078h EMI A/D Mux Control Register EMI_ADMUX

Bit	31	30	29	28	27	26	25	24	23	22	21	20	19	18	17	16
Name																
Type																
Reset																
Bit	15	14	13	12	11	10	9	8	7	6	5	4	3	2	1	0
Name														A2ADVH		MODE
Type														R/W		R/W
Reset														1		XADMUX

MODE A/D Mux memory I/F selection signal. The default value depends on the value of pin GPIO4 at reset.

- **0** Non-A/D Mux Mode
- **1** A/D Mux Mode

A2ADVH Address Valid to Address Hold Time

聯發機密不得洩漏
MTK CONFIDENTIAL
NO DISCLOSURE
IWIT

4 Microcontroller Peripherals

MTK Confidential A (機密)

Microcontroller (MCU) Peripherals are devices that are under direct control of the Microcontroller. Most of the devices are attached to the Advanced Peripheral Bus (APB) of the MCU subsystem, and serve as APB slaves. Each MCU peripheral must be accessed as a memory-mapped I/O device; that is, the MCU or the DMA bus master reads from or writes to the specific peripheral by issuing memory-addressed transactions.

4.1 Security Engine

4.1.1 General Description

The Secure Engine module is responsible for security functions in the MT6227. SE realizes an efficient scheme to protect the program in non-volatile memory. Applying the flows in the IC with Chip-ID can: a) encrypted codes to protect the codes to be cracked (Confidentiality); b) guarantee the integrity; c) Copyright protection.

To protect the program in the novo memory, SE references 1: Chip UID; 2: custom seed; 3: Internal reproducible noise to enlarge the entropy space of ciphering. After proper configuration in BCON and BSEED, users can encrypt program plaintext into cipher-texts and store them onto NoVo memory. Due to the program are stored in ciphered mode, it's not easy to be disassembled. Further, the encryption process has referred to Chip UID, which may be different between two different chips, the cipher-text encrypted referred to Chip UIDA is very likely decrypted to wrong one referred to other IDs.

4.1.2 Register Definitions

聯發機密不得洩漏
MTK CONFIDENTIAL
NO DISCLOSURE

Figure 32: SE Registers

Register Address	Register Function	Acronym
SE + 00c0h	SE Secure Booting control	**SE_BCON**
SE + 00c4h	SE Secure Booting source data	**SE_BSRC**
SE + 00c8h	SE Secure Booting seed data	**SE_BSEED**
SE + 00cch	SE Secure Booting encrypted data	**SE_BENC**
SE + 00d0h	SE Secure Booting decrypted data	**SE_BDEC**

SE+00c0h SE Secure Booting control SE_BCON

Bit	15	14	13	12	11	10	9	8	7	6	5	4	3	2	1	0
Name													**PAR3**	**PAR2**	**PAR1**	**DIS**
Type													R/W	R/W	R/W	R/W
Reset													0	0	0	0

DIS Disable Secure Booting function. When DIS is asserted, the data read from SE_BENC and SE_BDEC is the same as SE_BSRC.

PAR1 Use inner information parameter 1 (SK) to strengthen security.

PAR2 Use inner information parameter 2 (RS) to strengthen security.

PAR3 Use inner information parameter 3 (MR) to strengthen security.

SE+00c4h SE Secure Booting source data SE_BSRC

Bit	31	30	29	28	27	26	25	24	23	22	21	20	19	18	17	16
Name	**BSRC[31:16]**															
Type	WO															
Reset	0															
Bit	15	14	13	12	11	10	9	8	7	6	5	4	3	2	1	0
Name	**BSRC[15:0]**															

Type	WO
Reset	0

BSRC Source data for Secure Booting to be encrypted (obtained from SE_BENC) or decrypted (obtained from SE_BDEC).

MTK Confidential A (機密)

SE+00c8h SE Secure Booting seed value SE_BSEED

Bit	31	30	29	28	27	26	25	24	23	22	21	20	19	18	17	16
Name	**BSEED[31:16]**															
Type	WO															
Reset	0															
Bit	15	14	13	12	11	10	9	8	7	6	5	4	3	2	1	0
Name	**BSEED[15:0]**															
Type	WO															
Reset	0															

BSEED Seed data needed to increase security of the Boot Secure function. Set the seed value before performing Boot Secure the first time.

SE+00cch SE Secure Booting encrypted data SE_BENC

Bit	31	30	29	28	27	26	25	24	23	22	21	20	19	18	17	16
Name	**BENC[31:16]**															
Type	RO															
Reset	0															
Bit	15	14	13	12	11	10	9	8	7	6	5	4	3	2	1	0
Name	**BENC[15:0]**															
Type	RO															
Reset	0															

BENC Encrypted data from SE_BSRC.

聯發機密不得洩漏

SE+00d0h SE Secure Booting decrypted data SE_BDEC

Bit	31	30	29	28	27	26	25	24	23	22	21	20	19	18	17	16
Name	**BDEC[31:16]**															
Type	RO															
Reset	0															
Bit	15	14	13	12	11	10	9	8	7	6	5	4	3	2	1	0
Name	**BDEC[15:0]**															
Type	RO															
Reset	0															

BDEC Decrypted data from SE_BSRC.

MTK CONFIDENTIAL

4.1.3 Secure Booting Procedure

NO DISCLOSURE

Secure Booting is the major feature of SE that protects the program contents on flash memory from modification, skip or hard copy. With a secure process and a unique chip ID (UID), SE can encrypt or decrypt a segment of instruction data in order.

Encryption procedure:

1. Activate the eFuse module.
2. Write the seed value into BSEED. The seed value can be any 32-bit value. The same seed value is necessary in the decryption procedure.
3. Write the control value into BCON.
4. Write source data (instruction) into BSRC and read the cipher text from BENC.
5. Repeat step 4 until all instructions are encrypted.

IWIT

Decryption procedure:

1. Activate the eFuse module.
2. Write the seed value into BSEED. The seed value must be the same one used in the encryption procedure.
3. Write the control value into BCON. The control value must be the same one used in the encryption procedure.
4. Write the source data (instruction) into BSRC and read the plain text from BDEC.
5. Repeat step 4 until all instructions are decrypted.

Notes:

1. A bit length equal or less than 32 bits is acceptable for Secure Boot. E.g.: a 16-bit data 0x1234 is treated as 0x12340000 32-bit data and decrypted in the same manner.
2. For security reasons, access times to be encrypted or decrypted should not be the multiples of 4.
3. The internal states of Secure Booting function change under the following conditions, such that redundant register access is forbidden.
   - Write data into BSRC
   - Write data into BSEED
   - Read data from BENC or BDEC

As an example of the encryption and decryption of 16-bit data, consider the value 0xabcd:

Encryption:

1. The data is padded with zeros to obtain a 32-bit value: 0xabcd0000.
2. The encryption operation produces a value 0x12345678.

Decryption:

1. Only the most significant 16 bits 0x1234000 are considered and decrypted as 0xabcd7893.
2. The first 16 bits 0xabcd are retained, and 0x00007893 is ignored.

MTK Confidential A (機密)
IWIT
聯發機密不得洩漏
MTK CONFIDENTIAL
NO DISCLOSURE
IWIT

4.2 OTP Controller (OTPC)

4.2.1 General Description

There is 192-bit non-volatile memories consisted of OTPs in MT6225. OTP is one-time-programming non-volatile memory in CMOS. Some regions of these memories can be programmed by customers.

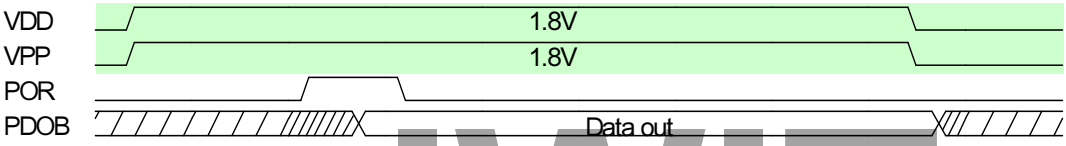

Figure 33 OTP initialization procedure

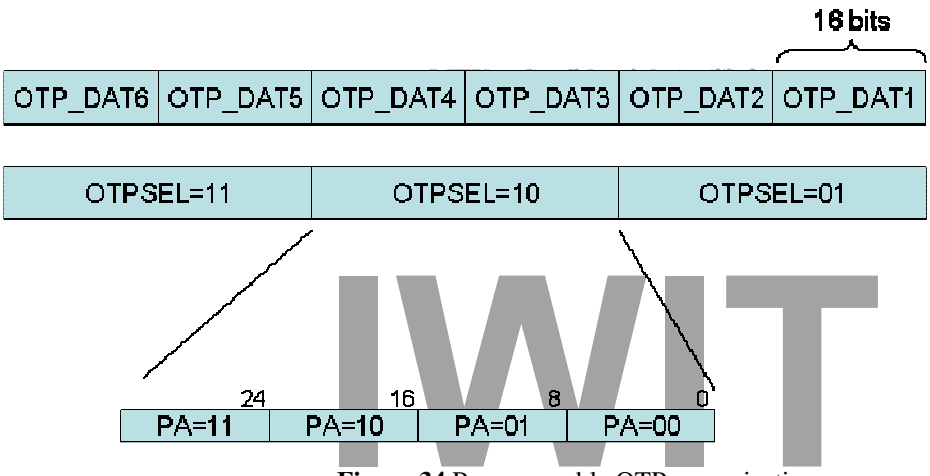

Figure 34 Programmable OTPs organization.

4.2.2 Register Definitions

CONFG+f000h OTP control 1 — OTP_CON1

Bit	15	14	13	12	11	10	9	8	7	6	5	4	3	2	1	0
Name							SPD			OTPSEL		PGM	WR	RES	BUSY	VLD
Type							R/W			R/W		R/W	WO	WO	RO	RO
Reset							00			00		0	0	0	0	0

VLD Indicate if OTP_DATx is valid or not. OTPC will generate a POR to initialize OTPs. After the initialization finished, this bit will change to 1 from initial 0. In other case, if you initialize OTPs by RD manually, the VLD will go to low. After RD process done, VLD will go to high again.

- **0** OTP_DATx content is unknown.
- **1** OTP_DATx content is valid.

BUSY OTP controller is busy. You should program OTPC only when BUSY is low.

RES Reserved bit. Always write this bit 0 when you program OTP_CON1.

WR Write strobe to program OTPs based on PA and PDIN when PGM is high.

PGM OTP Programming mode.

OTPSEL OTP selection.

- **00** No OTP is selected.
- **01** OTP_DAT2 and OTP_DAT1 is selected
- **10** OTP_DAT4 and OTP_DAT3 is selected
- **11** OTP_DAT6 and OTP_DAT5 is selected

SPD OTPC speed selection. Change this field depends on the system bus speed.

- **00** OTPC operates at system bus frequency equal to 13MHz
- **01** OTPC operates at system bus frequency equal to 26MHz
- **10** OTPC operates at system bus frequency equal to 39MHz
- **11** OTPC operates at system bus frequency equal to 52MHz

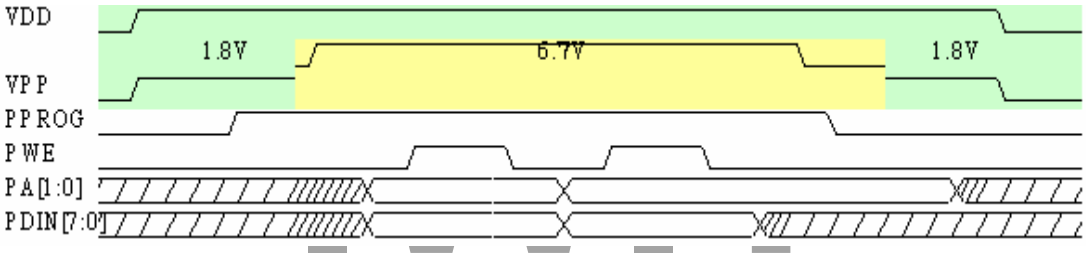

Figure 35 OTP programming waveform

IWIT
聯發機密不得洩漏
MTK CONFIDENTIAL
NO DISCLOSURE

About programming mode:

If you'd like to program OTPs with desired data, you should obey the following procedures:

MTK Confidential A (機密)

1. Set VPP to 1.8V
2. write PGM=1 to enter programming mode and wait until busy bit low.
3. set VPP to 6.7V. With correct setting (output mode, VPP mode. Please consult the GPIO section for more information), GPIO35 is indicated for the VPP status. When GPIO35 output from 0 to , VPP should be feed 6.7V from original 1.8V.
4. set OTPSEL, PA, PDIN properly to assign which OTP parts you want to write. You can refer to figure 2 to get to OTP organization.
5. write WR to 1 and wait until busy bit low.
6. if you want to program other bits, repeat step 4&5
7. set VPP to 1.8V
8. write PGM=0 to leave programming mode and wait until busy bit low

IWIT

CONFG+f004h OTP control 2 — OTP_CON2

Bit	15	14	13	12	11	10	9	8	7	6	5	4	3	2	1	0
Name	PDIN														PA	
Type	R/W														R/W	
Reset	0														0	

PA Program address.

24	16	8	0
PA=11	PA=10	PA=01	PA=00

PDIN Program data. The data to be programmed. OTP controller program OTPs 8 bits each time and the initial bits are all 1. Any bits can be write to 0 and not back to 1.

聯發機密不得洩漏

CONFG+f030h OTP DATA1 — OTP_DAT1

Bit	15	14	13	12	11	10	9	8	7	6	5	4	3	2	1	0
Name	OTP_DAT1															
Type	W*/R															
Reset	0xffff															

MTK CONFIDENTIAL

CONFG+f034h OTP DATA2 — OTP_DAT2

Bit	15	14	13	12	11	10	9	8	7	6	5	4	3	2	1	0
Name	WEN12	OTP_DAT2														
Type	W*/R	W*/R														
Reset	1	0x7fff														

NO DISCLOSURE

CONFG+f038h OTP DATA3 — OTP_DAT3

Bit	15	14	13	12	11	10	9	8	7	6	5	4	3	2	1	0
Name	OTP_DAT3															
Type	W*/R															
Reset	0xffff															

CONFG+f03ch OTP DATA4 — OTP_DAT4

Bit	15	14	13	12	11	10	9	8	7	6	5	4	3	2	1	0
Name	WEN34	OTP_DAT4														
Type	W*/R	W*/R														
Reset	1	0x7fff														

IWIT

CONFG+f040h OTP DATA5 OTP_DAT5

Bit	15	14	13	12	11	10	9	8	7	6	5	4	3	2	1	0
Name	OTP_DAT5															
Type	W*/R															
Reset	0xffff															

CONFG+f044h OTP DATA6 OTP_DAT6

Bit	15	14	13	12	11	10	9	8	7	6	5	4	3	2	1	0
Name	WEN56	OTP_DAT6														
Type	W*/R	W*/R														
Reset	1	0x7fff														

(*)Note: The bit can be write once, from 1 to 0, and from 0 to 1 is forbid.

WEN12 Write enable of OTP_DAT1 and OTP_DAT2. When this bit is 1, OTP_DAT1 and OTP_DAT2 are programmable. Otherwise, they are read only.

WEN34 Write enable of OTP_DAT3 and OTP_DAT4. When this bit is 1, OTP_DAT3 and OTP_DAT4 are programmable. Otherwise, they are read only.

WEN56 Write enable of OTP_DAT5 and OTP_DAT6. When this bit is 1, OTP_DAT5 and OTP_DAT6 are programmable. Otherwise, they are read only.

4.3 Pulse-Width Modulation Outputs

4.3.1 General Description

Two generic pulse-width modulators are implemented to generate pulse sequences with programmable frequency and duty cycle for LCD backlight or charging purpose. The duration of the PWM output signal is Low as long as the internal counter value is greater than or equal to the threshold value. The waveform is shown in **Figure 36**.

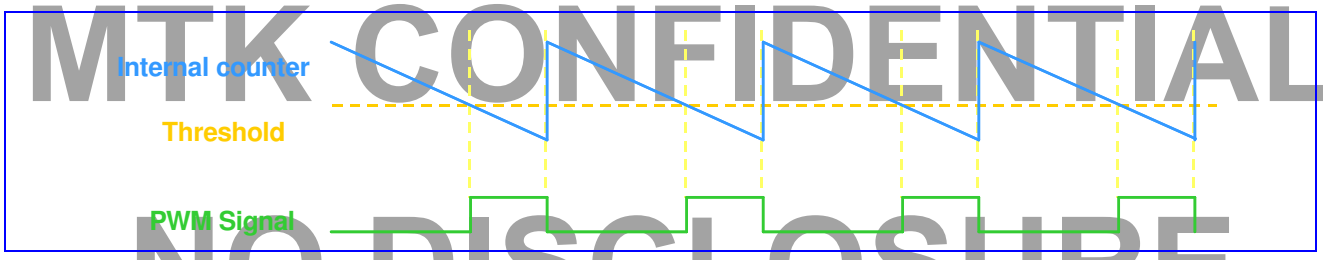

Figure 36 PWM waveform

The frequency and volume of PWM output signal are determined by these registers: PWM_COUNT, PWM_THRES, PWM_CON. POWERDOWN (pdn_pwm) signal is applied to power-down the PWM module. When PWM is deactivated (POWERDOWN=1), the output will be in Low state.

The output PWM frequency is determined by: $\frac{CLK}{CLOCK_DIV \times (PWM_COUNT + 1)}$ CLK = 13000000 when CLKSEL = 0, $CLK = 32000\, when CLKSEL = 1$

CLOCK_DIV = 1, when CLK[1:0] = 00b

CLOCK_DIV = 2, when CLK[1:0] = 01b

CLOCK_DIV = 4, when CLK[1:0] = 10b

CLOCK_DIV = 8, when CLK[1:0] = 11b

MTK Confidential A (機密)
聯發機密不得洩漏
MTK CONFIDENTIAL
NO DISCLOSURE
IWIT

The output PWM duty cycle is determined by: $\frac{PWM_THRES}{PWM_COUNT+1}$

MTK Confidential A (機密)

Note that PWM_THRES should be less than the PWM_COUNT. If this condition is not satisfied, the output pulse of the PWM will always be in High state.

4.3.2 Register Definitions

PWM+0000h PWM1 Control register PWM1_CON

Bit	15	14	13	12	11	10	9	8	7	6	5	4	3	2	1	0
Name														CLKSEL	CLK [1:0]	
Type														R/W	R/W	
Reset														0	0	

CLK Select PWM1 clock prescaler scale

- **00** CLK Hz
- **01** CLK/2 Hz
- **10** CLK/4 Hz
- **11** CLK/8 Hz

Note: When PWM1 module is disabled, its output should be kept in LOW state.

CLKSEL Select PWM1 clock

- **0** CLK=13M Hz
- **1** CLK=32K Hz

PWM+0004h PWM1 max counter value register PWM1_COUNT

Bit	15	14	13	12	11	10	9	8	7	6	5	4	3	2	1	0
Name				PWM1_COUNT [12:0]												
Type				R/W												
Reset				1FFFh												

PWM1_COUNT PWM1 max counter value. It will be the initial value for the internal counter. If PWM1_COUNT is written when the internal counter is counting backwards, no matter which mode it is, there is no effect until the internal counter counts down to zero, i.e. a complete period.

PWM+0008h PWM1 Threshold Value register PWM1_THRES

Bit	15	14	13	12	11	10	9	8	7	6	5	4	3	2	1	0
Name				PWM1_THRES [12:0]												
Type				R/W												
Reset				0												

PWM1_THRES Threshold value. When the internal counter value is greater than or equals to PWM1_THRES, the PWM1 output signal will be "0"; when the internal counter is less than PWM1_THRES, the PWM1 output signal will be "1".

PWM+000Ch PWM2 Control register PWM2_CON

Bit	15	14	13	12	11	10	9	8	7	6	5	4	3	2	1	0
Name														CLKSEL	CLK [1:0]	
Type														R/W	R/W	
Reset														0	0	

CLK Select PWM2 clock prescaler scale

- **00** CLK Hz
- **01** CLK/2 Hz

聯發機密不得洩漏
MTK CONFIDENTIAL
NO DISCLOSURE

10 CLK/4 Hz

11 CLK/8 Hz

MTK Confidential A (機密)

Note: When PWM2 module is disabled, its output should be keep in LOW state.

CLKSEL Select PWM2 clock

0 CLK=13M Hz

1 CLK=32K Hz

PWM+0010h PWM2 max counter value register PWM2_COUNT

Bit	15	14	13	12	11	10	9	8	7	6	5	4	3	2	1	0
Name				PWM2_COUNT [12:0]												
Type				R/W												
Reset				1FFFh												

PWM2_COUNT PWM2 max counter value. It will be the initial value for the internal counter. If PWM2_COUNT is written when the internal counter is counting backwards, no matter which mode it is, there is no effect until the internal counter counts down to zero, i.e. a complete period.

PWM+0014h PWM2 Threshold Value register PWM2_THRES

Bit	15	14	13	12	11	10	9	8	7	6	5	4	3	2	1	0
Name				PWM2_THRES [12:0]												
Type				R/W												
Reset				0												

PWM2_THRES Threshold value. When the internal counter value is greater than or equals to PWM2_THRES, the PWM1 output signal will be "0"; when the internal counter is less than PWM2_THRES, the PWM2 output signal will be "1".

聯發機密不得洩漏

Figure 37 shows the PWM waveform with register value present.

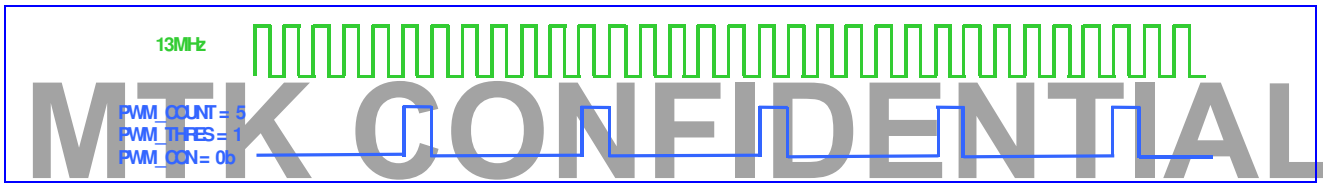

MTK CONFIDENTIAL

Figure 37 PWM waveform with register value present

NO DISCLOSURE

4.4 Alerter

4.4.1 General Description

The output of Alerter has two sources: one is the enhanced pwm output signal, which is implemented embedded in Alerter module; the other is PDM signal from DSP domain directly. The enhanced pwm with three operation modes is implemented to generate a signal with programmable frequency and tone volume. The frequency and volume are determined by four registers: ALERTER_CNT1, ALERTER_THRES, ALERTER_CNT2 and ALERTER_CON. ALERTER_CNT1 and ALERTER_CNT2 are the initial counting values of internal counter1 and internal counter2 respectively. POWERDOWN signal is applied to power-down the Alerter module. When Alerter is deactivated (POWERDOWN=1), the output will be in low state.

With ALERTER_CON, the output source can be chosen from enhanced pwm or PDM. The waveform of the alerter from enhanced pwm source in different modes can be shown in **Figure 38**. In mode 1, the polarity of alerter output signal according to the relationship between internal counter1 and the programmed threshold will be inverted each time internal counter2 reaches zero. In mode2, each time the internal counter2 count backwards to zero the alerter output

signal is normal pwm signal (i.e. signal is low as long as the internal counter1 value is greater than or equals to ALERTER_THRES, and it is high when the internal counter1 is less than ALERTER_THRES) or low state by turns. In mode3, the value of internal counter2 has no effect on output signal, i.e. the alerter output signal is low as long as the internal counter1 value is above the programmed threshold and is high the internal counter1 is less than ALERTER_THRES when no matter what value the internal counter2 is.

MTK Confidential A (機密)

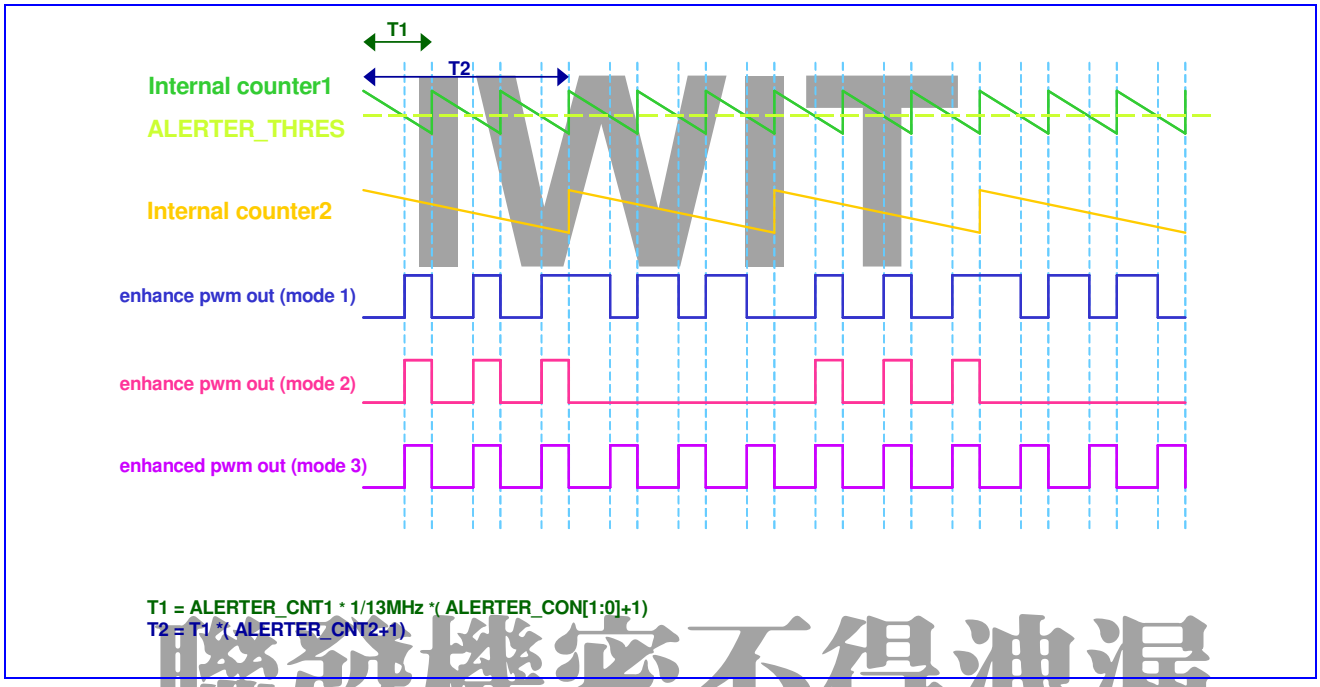

Figure 38 Alerter waveform

聯發機密不得洩漏

The output signal frequency is determined by:

$$\begin{cases} \dfrac{13000000}{2\times(ALERTER_CON[1:0]+1)\times(ALERTER_CNT1+1)\times(ALERTER_CNT2+1)} & \text{for mode 1 and mode 2} \\ \dfrac{13000000}{(ALERTER_CNT1+1)\times(ALERTER_CON[1:0])} & \text{for mode 3} \end{cases}$$

MTK CONFIDENTIAL

The volume of the output signal is determined by: $\dfrac{ALERTER_THRES}{ALERTER_CNT1+1}$

NO DISCLOSURE

4.4.2 Register Definitions

ALTER+0000h Alerter counter1 value register

ALERTER_CNT1

Bit	15	14	13	12	11	10	9	8	7	6	5	4	3	2	1	0
Name	ALERTER_CNT1 [15:0]															
Type	R/W															
Reset	FFFFh															

ALERTER_CNT1 Alerter max counter's value. ALERTER_CNT1 is the initial value of internal counter1. If ALERTER_CNT1 is written when the internal counter1 is counting backwards, no matter which mode it is, there is no effect until the internal counter1 counts down to zero, i.e. a complete period.

IWIT

ALTER+0004h Alerter threshold value register

ALERTER_THRES

Bit	15	14	13	12	11	10	9	8	7	6	5	4	3	2	1	0

Name	ALERTER_THRES [15:0]
Type	R/W
Reset	0

MTK Confidential A (機密)

ALERTER_THRES Threshold value. When the internal counter1 value is greater than or equals to ALERTER_THRES, the Alerter output signal will be low state; when the counter1 is less than ALERTER_THRES, the Alerter output signal will be high state.

ALTER+0008h Alerter counter2 value register — ALERTER_CNT2

Bit	15	14	13	12	11	10	9	8	7	6	5	4	3	2	1	0
Name												ALERTER_CNT2 [5:0]				
Type												R/W				
Reset												111111b				

AlERTER_CNT2 ALERTER_CNT2 is the initial value for internal counter2. The internal counter2 decreases by one everytime the internal counter1 count down to be zero. The polarity of alerter output signal which depends on the relationship between the internal counter1 and ALERTER_THRES will be inverted anytime when the internal counter2 counts down to zero. E.g. in the beginning, the output signal is low when the internal counter1 isn't less ALERTER_THRES and is high when the internal counter1 is less than ALERTER_THRES. But after the internal counter2 counts down to zero, the output signal will be high when the internal counter1 isn't less than ALERTER_THRES and will be low when the internal counter1 is less than ALERTER_THRES.

ALTER+000Ch Alerter control register — ALERTER_CON

Bit	15	14	13	12	11	10	9	8	7	6	5	4	3	2	1	0
Name								TYPE				MODE			CLK [1:0]	
Type								R/W				R/W			R/W	
Reset								0				0			0	

CLK Select PWM Waveform clock

- **00** 13M Hz
- **01** 13/2M Hz
- **10** 13/4M Hz
- **11** 13/8M Hz

MODE Select Alerter mode

- **00** Mode 1 selected
- **01** Mode 2 selected
- **10** Mode 3 selected

TYPE Select the ALERTER output source from PWM or PDM

- **0** Output generated from PWM path
- **1** Output generated from PDM path

Note: When alerter module is power down, its output should be kept in low state.

Figure 39 shows the Alerter waveform with register value present.

MTK CONFIDENTIAL
NO DISCLOSURE
IWIT

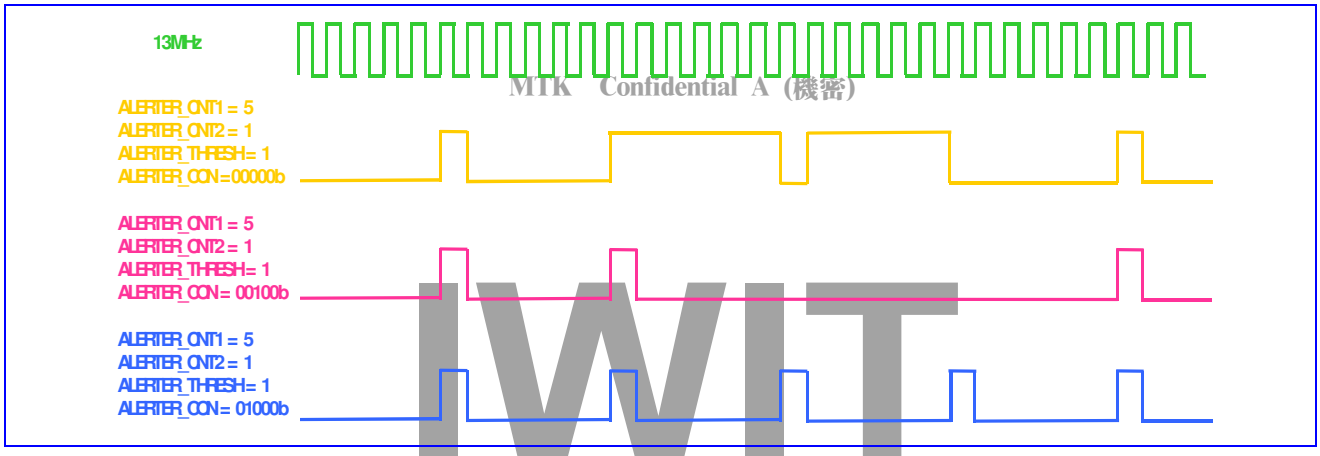

Figure 39 Alerter output signal from enhanced pwm with register value present.

4.5 SIM Interface

The MT6225 contains a dedicated smart card interface to allow the MCU access to the SIM card. It can operate via 5 terminals, using SIMVCC, SIMSEL, SIMRST, SIMCLK and SIMDATA.

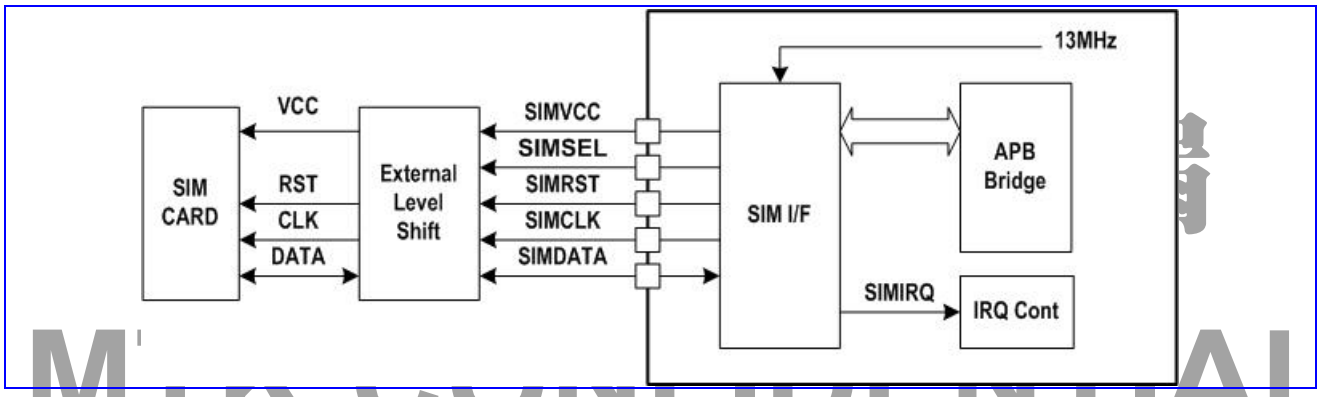

Figure 40 SIM Interface Block Diagram

The SIMVCC is used to control the external voltage supply to the SIM card and SIMSEL determines the regulated smart card supply voltage. SIMRST is used as the SIM card reset signal. Besides, SIMDATA and SIMCLK are used for data exchange purpose.

Basically, the SIM interface acts as a half duplex asynchronous communication port and its data format is composed of ten consecutive bits: a start bit in state Low, eight information bits, and a tenth bit used for parity checking. The data format can be divided into two modes as follows:

<u>Direct Mode (ODD=SDIR=SINV=0)</u>

SB D0 D1 D2 D3 D4 D5 D6 D7 PB

SB: Start Bit (in state Low)

Dx: Data Byte (LSB is first and logic level ONE is High)

PB: Even Parity Check Bit

<u>Indirect Mode (ODD=SDIR=SINV=1)</u>

SB N7 N6 N5 N4 N3 N2 N1 N0 PB

SB: Start Bit (in state Low)

MTK CONFIDENTIAL
NO DISCLOSURE
IWIT

Nx: Data Byte (MSB is first and logic level ONE is Low)

PB: Odd Parity Check Bit

MTK Confidential A (機密)

If the receiver gets a wrong parity bit, it will respond by pulling the SIMDATA Low to inform the transmitter and the transmitter will retransmit the character.

When the receiver is a SIM Card, the error response starts 0.5 bits after the PB and it may last for 1~2 bit periods.

When the receiver is the SIM interface, the error response starts 0.5 bits after the PB and lasts for 1.5 bit period.

When the SIM interface is the transmitter, it will take totally 14 bits guard period whether the error response appears. If the receiver shows the error response, the SIM interface will retransmit the previous character again else it will transmit the next character.

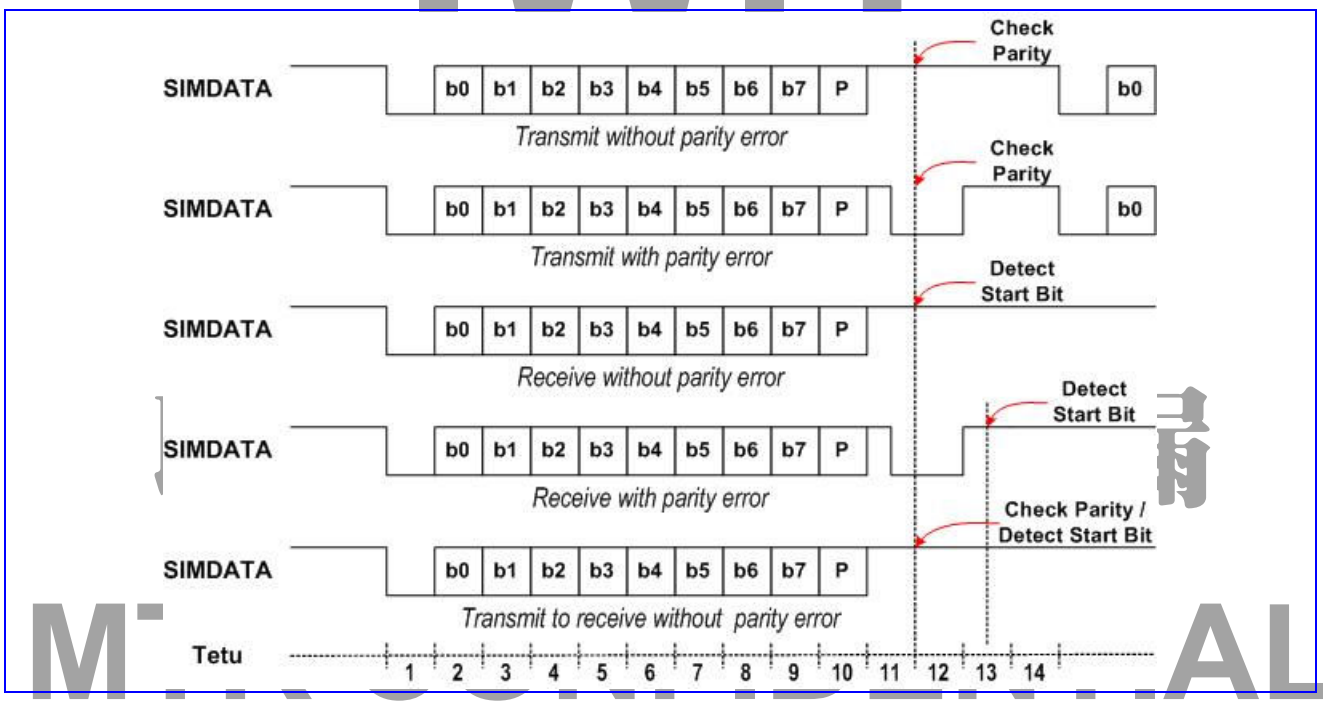

Figure 41 SIM Interface Timing Diagram

4.5.1 Register Definitions

SIM+0000h SIM module control register SIM_CONT

Bit	15	14	13	12	11	10	9	8	7	6	5	4	3	2	1	0
Name														WRST	CSTOP	SIMON
Type														W	R/W	R/W
Reset														0	0	0

SIMON SIM card power-up/power-down control

- **0** Initiate the card deactivation sequence
- **1** Initiate the card activation sequence

CSTOP Enable clock stop mode. Together with CPOL in SIM_CNF register, it determines the polarity of the SIMCLK in this mode.

- **0** Enable the SIMCLK output.
- **1** Disable the SIMCLK output

WRST SIM card warm reset control

MTK CONFIDENTIAL
NO DISCLOSURE
IWIT
IWIT

SIM+0004h SIM module configuration register SIM_CONF

MTK Confidential A (機密)

Bit	15	14	13	12	11	10	9	8	7	6	5	4	3	2	1	0
Name						HFEN	T0EN	T1EN	TOUT	SIMSEL	ODD	SDIR	SINV	CPOL	TXACK	RXACK
Type						R/W	R/W	R/W	R/W	R/W	R/W	R/W	R/W	R/W	R/W	R/W
Reset						0	0	0	0	0	0	0	0	0	0	0

RXACK SIM card reception error handshake control

- **0** Disable character receipt handshaking
- **1** Enable character receipt handshaking

TXACK SIM card transmission error handshake control

- **0** Disable character transmission handshaking
- **1** Enable character transmission handshaking

CPOL SIMCLK polarity control in clock stop mode

- **0** Make SIMCLK stop in LOW level
- **1** Make SIMCLK stop in HIGH level

SINV Data Inverter.

- **0** Not invert the transmitted and received data
- **1** Invert the transmitted and received data

SDIR Data Transfer Direction

- **0** LSB is transmitted and received first
- **1** MSB is transmitted and received first

ODD Select odd or even parity

- **0** Even parity
- **1** Odd parity

SIMSEL SIM card supply voltage select

- **0** SIMSEL pin is set to LOW level
- **1** SIMSEL pin is set to HIGH level

TOUT SIM work waiting time counter control

- **0** Disable Time-Out counter
- **1** Enable Time-Out counter

T1EN T=1 protocol controller control

- **0** Disable T=1 protocol controller
- **1** Enable T=1 protocol controller

T0EN T=0 protocol controller control

- **0** Disable T=0 protocol controller
- **1** Enable T=0 protocol controller

HFEN Hardware flow control

- **0** Disable hardware flow control
- **1** Enable hardware flow control

SIM +0008h SIM Baud Rate Register SIM_BRR

Bit	15	14	13	12	11	10	9	8	7	6	5	4	3	2	1	0
Name										ETU[8:0]					SIMCLK[1:0]	
Type										R/W					R/W	
Reset										372d					01	

SIMCLK Set SIMCLK frequency

- **00** 13/2 MHz
- **01** 13/4 MHz

IWIT
嚴發機密不得洩漏
MTK CONFIDENTIAL
NO DISCLOSURE
IWIT

10 13/8 MHz

11 13/32 MHz

ETU Determines the duration of elementary time unit in unit of SIMCLK

MTK Confidential A (機密)

SIM +0010h SIM interrupt enable register SIM_IRQEN

Bit	15	14	13	12	11	10	9	8	7	6	5	4	3	2	1	0
Name						EDCERR	T1END	RXERR	T0END	SIMOFF	ATRERR	TXERR	TOUT	OVRUN	RXTIDE	TXTIDE
Type						R/W	R/W	R/W	R/W	R/W	R/W	R/W	R/W	R/W	R/W	R/W
Reset						0	0	0	0	0	0	0	0	0	0	0

For all these bits

0 Interrupt is disabled

1 Interrupt is enabled

SIM +0014h SIM module status register SIM_STS

Bit	15	14	13	12	11	10	9	8	7	6	5	4	3	2	1	0
Name						EDCERR	T1END	RXERR	T0END	SIMOFF	ATRERR	TXERR	TOUT	OVRUN	RXTIDE	TXTIDE
Type						R/C	R/C	R/C	R/C	R/C	R/C	R/C	R/C	R/C	R	R
Reset						—	—	—	—	—	—	—	—	—	—	—

TXTIDE Transmit FIFO tide mark reached interrupt occurred

RXTIDE Receive FIFO tide mark reached interrupt occurred

OVRUN Transmit/Receive FIFO overrun interrupt occurred

TOUT Between character timeout interrupt occurred

TXERR Character transmission error interrupt occurred

ATRERR ATR start time-out interrupt occurred

SIMOFF Card deactivation complete interrupt occurred

T0END Data Transfer handled by T=0 Controller completed interrupt occurred

RXERR Character reception error interrupt occurred

T1END Data Transfer handled by T=1 Controller completed interrupt occurred

EDCERR T=1 Controller CRC error occurred

聯發機密不得洩漏
MTK CONFIDENTIAL
NO DISCLOSURE

SIM +0020h SIM retry limit register SIM_RETRY

Bit	15	14	13	12	11	10	9	8	7	6	5	4	3	2	1	0
Name						TXRETRY								RXRETRY		
Type						R/W								R/W		
Reset						3h								3h		

RXRETRY Specify the max. numbers of receive retries that are allowed when parity error has occurred.

TXRETRY Specify the max. numbers of transmit retries that are allowed when parity error has occurred.

SIM +0024h SIM FIFO tide mark register SIM_TIDE

Bit	15	14	13	12	11	10	9	8	7	6	5	4	3	2	1	0
Name					TXTIDE[3:0]								RXTIDE[3:0]			
Type					R/W								R/W			
Reset					0h								0h			

RXTIDE Trigger point for RXTIDE interrupt

TXTIDE Trigger point for TXTIDE interrupt

SIM +0030h Data register used as Tx/Rx Data Register SIM_DATA

Bit	15	14	13	12	11	10	9	8	7	6	5	4	3	2	1	0
Name									DATA[7:0]							

Type									R/W
Reset									—

MTK Confidential A (機密)

DATA Eight data digits. These correspond to the character being read or written

SIM +0034h SIM FIFO count register SIM_COUNT

Bit	15	14	13	12	11	10	9	8	7	6	5	4	3	2	1	0
Name												COUNT[4:0]				
Type												R/W				
Reset												0h				

COUNT The number of characters in the SIM FIFO when read, and flushes when written.

SIM +0040h SIM activation time register SIM_ATIME

Bit	15	14	13	12	11	10	9	8	7	6	5	4	3	2	1	0
Name	ATIME[15:0]															
Type	R/W															
Reset	AFC7h															

ATIME The register defines the duration, in SIM clock cycles, of the time taken for each of the three stages of the card activation process

SIM +0044h SIM deactivation time register SIM_DTIME

Bit	15	14	13	12	11	10	9	8	7	6	5	4	3	2	1	0
Name					DTIME[11:0]											
Type					R/W											
Reset					3E7h											

DTIME The register defines the duration, in 13MHz clock cycles, of the time taken for each of the three stages of the card deactivation sequence

SIM +0048h Character to character waiting time register SIM_WTIME

Bit	15	14	13	12	11	10	9	8	7	6	5	4	3	2	1	0
Name	WTIME[15:0]															
Type	R/W															
Reset	983h															

WTIME Maximum interval between the leading edge of two consecutive characters in 4 ETU unit

SIM +004Ch Block to block guard time register SIM_GTIME

Bit	15	14	13	12	11	10	9	8	7	6	5	4	3	2	1	0
Name													GTIME			
Type													R/W			
Reset													10d			

GTIME Minimum interval between the leading edge of two consecutive characters sent in opposite directions in ETU unit

SIM +0050h Block to error signal time register SIM_ETIME

Bit	15	14	13	12	11	10	9	8	7	6	5	4	3	2	1	0
Name												ETIME				
Type													R/W			
Reset													15d			

ETIME The register defines the interval, in 1/16 ETU unit, between the end of transmitted parity bit and time to check parity error signal sent from SIM card.

聯發機密不得洩漏
MTK CONFIDENTIAL
NO DISCLOSURE

SIM +0060h SIM command header register: INS SIM_INS

Bit	15	14	13	12	11	10	9	8	7	6	5	4	3	2	1	0
Name								INSD	SIMINS[7:0]							
Type								R/W	R/W							
Reset								0h	0h							

MTK Confidential A (機密)

SIMINS This field should be identical to the INS instruction code. When writing to this register, the T=0 controller will be activated and data transfer will be initiated.

INSD [Description for this register field]

0 T=0 controller receives data from the SIM card

1 T=0 controller sends data to the SIM card

SIM +0064h SIM command header register: P3 SIM_P3 (ICC_LEN)

Bit	15	14	13	12	11	10	9	8	7	6	5	4	3	2	1	0
Name								SIMP3[8:0]								
Type								R/W								
Reset								0h								

SIMP3 This field should be identical to the P3 instruction code. It should be written prior to the SIM_INS register. While the data transfer is going on, this field shows the no. of the remaining data to be sent or to be received

SIM +0068h SIM procedure byte register: SW1 SIM_SW1 (ICC_LEN)

Bit	15	14	13	12	11	10	9	8	7	6	5	4	3	2	1	0
Name									SIMSW1[7:0]							
Type									R							
Reset									0h							

SIMSW1 This field holds the last received procedure byte for debug purpose. When the T0END interrupt occurred, it keeps the SW1 procedure byte.

SIM +006Ch SIM procedure byte register: SW2 SIM_SW2 (ICC_EDC)

Bit	15	14	13	12	11	10	9	8	7	6	5	4	3	2	1	0
Name									SIMSW2[7:0]							
Type									R							
Reset									0h							

SIMSW2 This field holds the SW2 procedure byte

4.5.2 SIM Card Insertion and Removal

The detection of physical connection to the SIM card and card removal is done by the external interrupt controller or by GPIO.

4.5.3 Card Activation and Deactivation

The card activation and deactivation sequence both are controlled by H/W. The MCU initiates the activation sequence by writing a “1” to bit 0 of the SIM_CON register, and then the interface performs the following activation sequence:

- Assert SIMRST LOW
- Set SIMVCC at HIGH level and SIMDATA in reception mode
- Enable SIMCLK clock
- De-assert SIMRST HIGH (required if it belongs to active low reset SIM card)

IWIT 保密資料 不得洩漏 MTK CONFIDENTIAL NO DISCLOSURE IWIT

The final step in a typical card session is contact deactivation in order that the card is not electrically damaged. The deactivation sequence is initiated by writing a “0” to bit 0 of the SIM_CONT register, and then the interface performs the following deactivation sequence:

MTK Confidential A (機密)

- Assert SIMRST LOW
- Set SCIMCLK at LOW level
- Set SIMDATA at LOW level
- Set SIMVCC at LOW level

4.5.4 Answer to Reset Sequence

After card activation, a reset operation results in an answer from the card consisting of the initial character TS, followed by at most 32 characters. The initial character TS provides a bit synchronization sequence and defines the conventions to interpret data bytes in all subsequent characters.

On reception of the first character, TS, MCU should read this character, establish the respective required convention and reprogram the related registers. These processes should be completed prior to the completion of reception of the next character. And then, the remainder of the ATR sequence is received, read via the SIM_DATA in the selected convention and interpreted by the S/W.

The timing requirement and procedures for ATR sequence are handled by H/W and shall meet the requirement of ISO 7816-3 as shown in **Figure 42**.

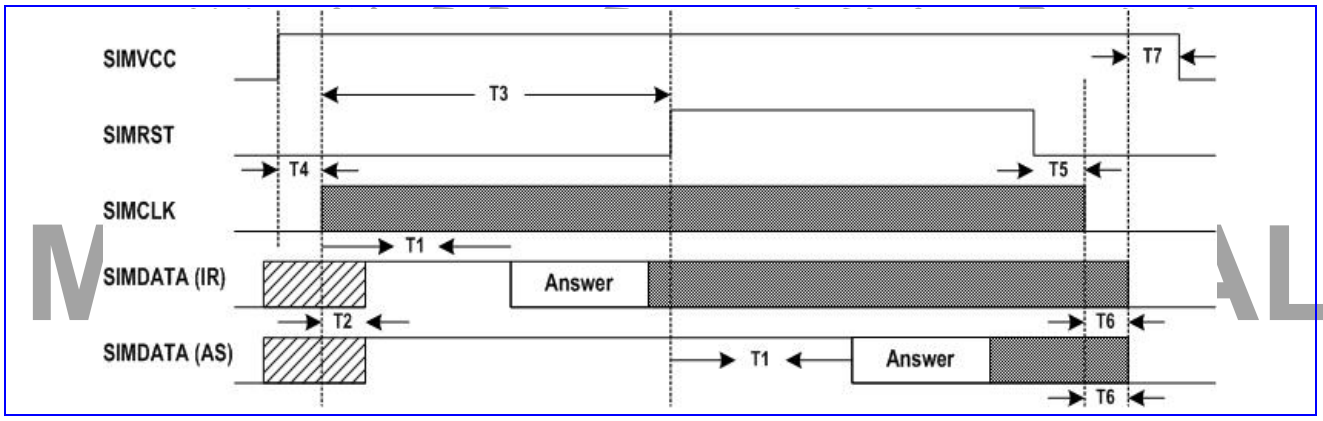

Figure 42 Answer to Reset Sequence

Time	Value	Comment
T1	> 400 SIMCLK	SIMCLK start to ATR appear
T2	< 200 SIMCLK	SIMCLK start to SIMDATA in reception mode
T3	> 40000 SIMCLK	SIMCLK start to SIMRST High
T4	—	SIMVCC High to SIMCLK start
T5	—	SIMRST Low to SIMCLK stop
T6	—	SIMCLK stop to SIMDATA Low
T7	—	SIMDATA Low to SIMVCC Low

Table 26 Answer to Reset Sequence Time-Out Condition

IWIT MATERIAL NO DISCLOSURE IWIT

4.5.5 SIM Data Transfer

Two transfer modes are provided, either in software controlled byte by byte fashion or in a block fashion using T=0 controller and DMA controller. In both modes, the time-out counter could be enabled to monitor the elapsed time between two consecutive bytes.

4.5.5.1 Byte Transfer Mode

This mode is used during ATR and PPS procedure. In this mode, the SIM interface only ensures error free character transmission and reception.

Receiving Character

Upon detection of the start-bit sent by SIM card, the interface transforms into reception mode and the following bits are shifted into an internal register. If no parity error is detected or character-receive handshaking is disabled, the received-character is written into the SIM FIFO and the SIM_COUNT register is increased by one. Otherwise, the SIMDATA line is held low at 0.5 etu after detecting the parity error for 1.5 etus, and the character is re-received. If a character fails to be received correctly for the RXRETRY times, the receive-handshaking is aborted and the last-received character is written into the SIM FIFO, the SIM_COUNT is increased by one and the RXERR interrupt is generated

When the number of characters held in the receive FIFO exceeds the level defined in the SIM_TIDE register, a RXTIDE interrupt is generated. The number of characters held in the SIM FIFO can be determined by reading the SIM_COUNT register and writing to this register will flush the SIM FIFO.

Sending Character

Characters that are to be sent to the card are first written into the SIM FIFO and then automatically transmitted to the card at timed intervals. If character-transmit handshaking is enabled, the SIMDATA line is sampled at 1 etu after the parity bit. If the card indicates that it did not receive the character correctly, the character is retransmitted a maximum of TXRETRY times before a TXERR interrupt is generated and the transmission is aborted. Otherwise, the succeeding byte in the SIM FIFO is transmitted.

If a character fails to be transmitted and a TXERR interrupt is generated, the interface needs to be reset by flushing the SIM FIFO before any subsequent transmit or receive operation.

When the number of characters held in the SIM FIFO falls below the level defined in the SIM_TIDE register, a TXTIDE interrupt is generated. The number of characters held in the SIM FIFO can be determined by reading the SIM_COUNT register and writing to this register will flush the SIM FIFO.

4.5.5.2 Block Transfer Mode

Basically, the SIM interface is designed to work in conjunction with the T=0 protocol controller and the DMA controller during non-ATR and non-PPS phase, though it is still possible for software to service the data transfer manually like in byte transfer mode if necessary and thus the T=0 protocol should be controlled by software.

The T=0 controller is accessed via four registers representing the instruction header bytes INS and P3, and the procedure bytes SW1 and SW2. These registers are:

SIM_INS, SIM_P3

SIM_SW1, SIM_SW2

During characters transfer, SIM_P3 holds the number of characters to be sent or to be received and SIM_SW1 holds the last received procedure byte including NULL, ACK, NACK and SW1 for debug purpose.

MTK Confidential (機密)
IWIT
聯發機密不得洩漏
MTK CONFIDENTIAL
NO DISCLOSURE
IWIT

Data Receive Instruction

Data Receive Instructions receive data from the SIM card. It is instantiated as the following procedure.

MTK Confidential A (機密)

```
1. Enable the T=0 protocol controller by setting the T0EN bit to 1 in SIM_CONF register
2. Program the SIM_TIDE register to 0x0000 (TXTIDE = 0, RXTIDE = 0)
3. Program the SIM_IRQEN to 0x019C (Enable RXERR, TXERR, T0END, TOUT and OVRUN interrupts)
4. Write CLA, INS, P1, P2 and P3 into SIM FIFO
5. Program the DMA controller :
   DMAn_MSBSRC and DMAn_LSBSRC : address of SIM_DATA register
   DMAn_MSBDST and DMAn_LSBDST : memory address reserved to store the received characters
   DMAn_COUNT : identical to P3 or 256 (if P3 == 0)
   DMAn_CON : 0x0078
6. Write P3 into SIM_P3 register and then INS into SIM_INS register (Data Transfer is initiated
   now)
7. Enable the Time-out counter by setting the TOUT bit to 1 in SIM_CONF register
8. Start the DMA controller by writing 0x8000 into the DMAn_START register to
```

Upon completion of the Data Receive Instruction, T0END interrupt will be generated and then the Time-out counter should be disabled by setting the TOUT bit back to 0 in SIM_CONF register.

If error occurs during data transfer (RXERR, TXERR, OVRUN or TOUT interrupt is generated), the SIM card should be deactivated first and then activated prior subsequent operations.

Data Send Instruction

Data Send Instructions send data to the SIM card. It is instantiated as the following procedure.

聯發機密不得洩漏

```
1. Enable the T=0 protocol controller by setting the T0EN bit to 1 in SIM_CONF register
2. Program the SIM_TIDE register to 0x0100 (TXTIDE = 1, RXTIDE = 0)
3. Program the SIM_IRQEN to 0x019C (Enable RXERR, TXERR, T0END, TOUT and OVRUN interrupts)
4. Write CLA, INS, P1, P2 and P3 into SIM FIFO
5. Program the DMA controller :
   DMAn_MSBSRC and DMAn_LSBSRC : memory address reserved to store the transmitted characters
   DMAn_MSBDST and DMAn_LSBDST : address of SIM_DATA register
   DMAn_COUNT : identical to P3
   DMAn_CON : 0x0074
6. Write P3 into SIM_P3 register and then (0x0100 | INS) into SIM_INS register (Data Transfer
   is initiated now)
7. Enable the Time-out counter by setting the TOUT bit to 1 in SIM_CONF register
8. Start the DMA controller by writing 0x8000 into the DMAn_START register
```

MTK CONFIDENTIAL
NO DISCLOSURE

Upon completion of the Data Send Instruction, T0END interrupt will be generated and then the Time-out counter should be disabled by setting the TOUT bit back to 0 in SIM_CONF register.

If error occurs during data transfer (RXERR, TXERR, OVRUN or TOUT interrupt is generated), the SIM card should be deactivated first and then activated prior subsequent operations.

4.6 Keypad Scanner

4.6.1 General Description

The keypad can be divided into two parts: one is the keypad interface including 7 columns and 6 rows; the other is the key detection block which provides key pressed, key released and de-bounce mechanism. Each time the key is pressed or released, i.e. something different in the 7 x 6 matrix, the key detection block will sense it, and it will start to recognize if it is a key pressed or key released event. Whenever the key status changes and is stable, a KEYPAD IRQ will be issued. The MCU can then read the key(s) pressed directly in KP_HI_KEY, KP_MID_KEY and KP_LOW_KEY registers. To ensure that the key pressed information will not be missed, the status register in keypad

will not be read clear by APB bus read command. The status register can only be changed by the key-pressed detection FSM. This keypad can detect one or two key-pressed simultaneously with any combination. **Figure 43** shows one key pressed condition. **Figure 44**(a) and **Figure 44**(b) indicate two keys pressed cases. Since the key press detection depends on the high or low level of the external keypad interface, if keys are pressed at the same time and there exists a key that is on the same column and the same row with the other keys, it will not be able to decode the correct key pressed. For example, if there are three key presses: key1 = (x1, y1), key2 = (x2, y2), and key3 = (x1, y2), then both key3 and key4 = (x2, y1) will be detected, and therefore it will not possible to distinguish correctly. Hence, the keypad can detect only one or two keys pressed simultaneously at any combination. Due to the keypad interface, more than two keys pressed simultaneously with some specific pattern will get the wrong information. If these specific patterns are excluded, the keypad-scanning block can detect 11 keys at the same time and it's shown as **Figure 45**.

MTK Confidential A (機密)

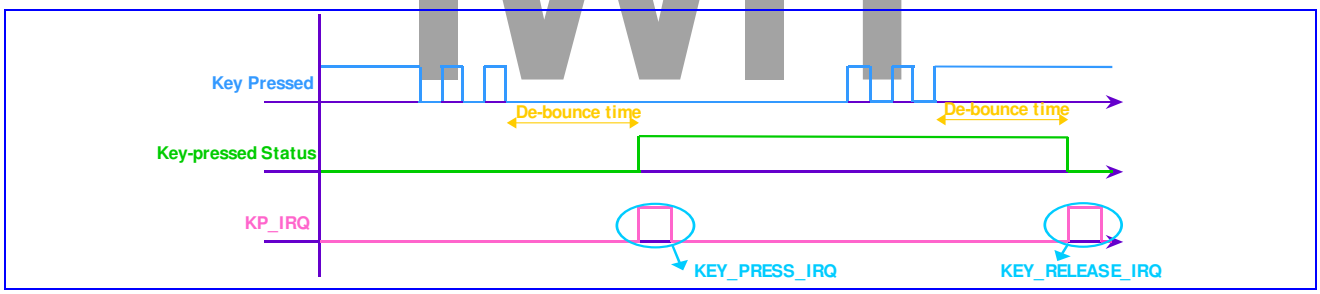

Figure 43 One key pressed with de-bounce mechanism denoted

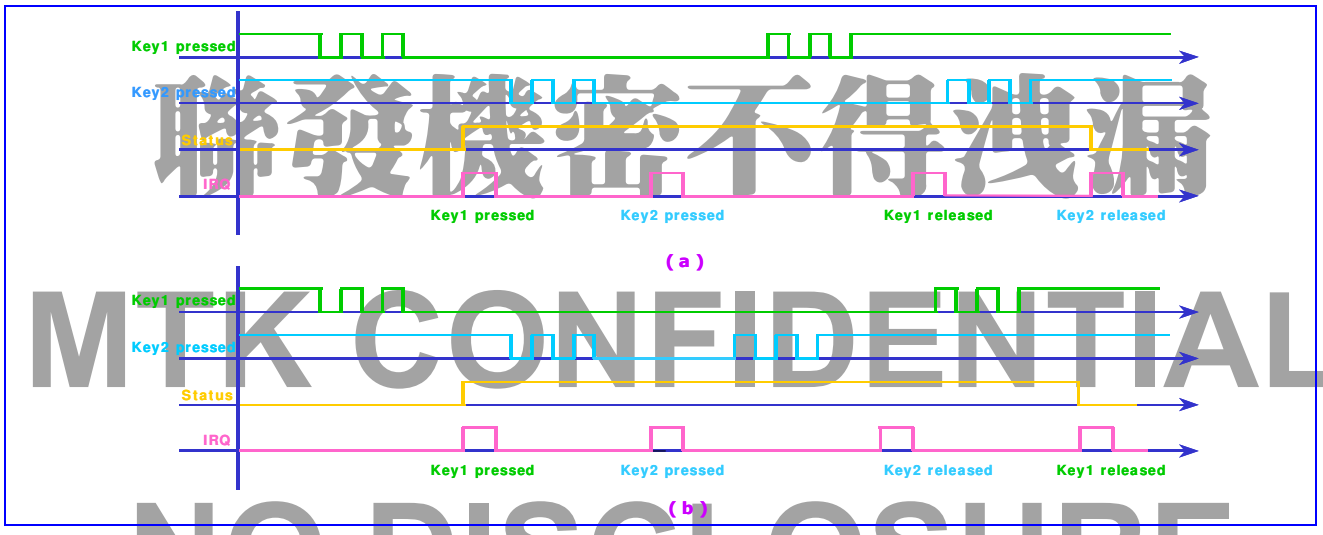

Figure 44 (a) Two keys pressed, case 1 **(b)** Two keys pressed, case 2

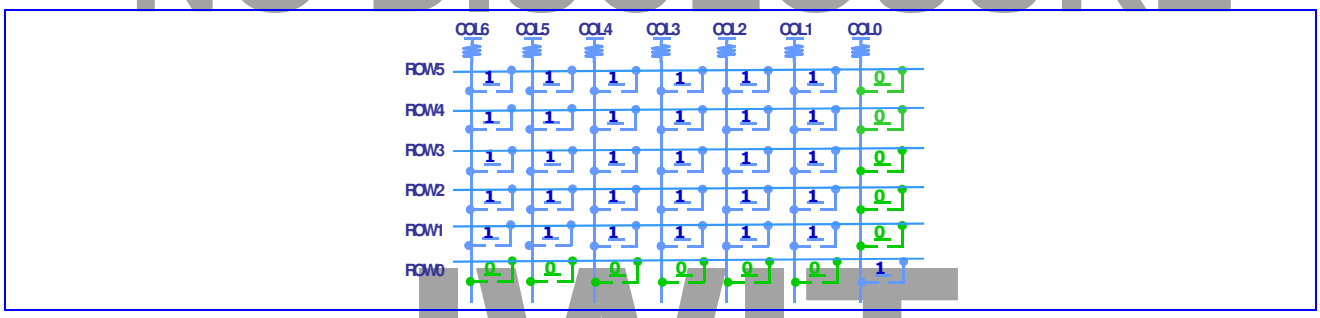

Figure 45 11 keys are detected at the same time

聯發機密不得洩漏
MTK CONFIDENTIAL
NO DISCLOSURE

4.6.2 Register Definitions

MTK Confidential A (機密)

KP +0000h Keypad status KP_STA

Bit	15	14	13	12	11	10	9	8	7	6	5	4	3	2	1	0
Name																STA
Type																RO
Reset																0

STA This register indicates the keypad status, and it will not be cleared by read.

- **0** No key pressed
- **1** Key pressed

KP +0004h Keypad scanning output, the lower 16 keys KP_LOW_KEY

Bit	15	14	13	12	11	10	9	8	7	6	5	4	3	2	1	0
Name	KEYS [15:0]															
Type	RO															
Reset	FFFFh															

KP +0008h Keypad scanning output, the medium 16 keys KP_MID_KEY

Bit	15	14	13	12	11	10	9	8	7	6	5	4	3	2	1	0
Name	KEYS [31:16]															
Type	RO															
Reset	FFFFh															

KP+000Ch Keypad scanning output, the higher 4 keys KP_HIGH_KEY

Bit	15	14	13	12	11	10	9	8	7	6	5	4	3	2	1	0
Name							KEYS[41:32]									
Type							RO									
Reset							3FF'h									

These two registers list the status of 42 keys on the keypad. When the MCU receives the KEYPAD IRQ, both two registers must be read. If any key is pressed, the relative bit will be set to 0.

KEYS Status list of the 42 keys.

KP +00010h De-bounce period setting KP_DEBOUNCE

Bit	15	14	13	12	11	10	9	8	7	6	5	4	3	2	1	0
Name			DEBOUNCE [13:0]													
Type			R/W													
Reset			400h													

This register defines the waiting period before key press or release events are considering stale.

DEBOUNCE De-bounce time = KP_DEBOUNCE/32 ms.

4.7 General Purpose Inputs/Outputs

MT6225 offers 53 general-purpose I/O pins and 4 general-purpose output pins. By setting the control registers, MCU software can control the direction, the output value, and read the input values on these pins. These GPIOs and GPOs are multiplexed with other functionalities to reduce the pin count.

IWIT 聯發機密不得洩漏 MTK CONFIDENTIAL NO DISCLOSURE IWIT

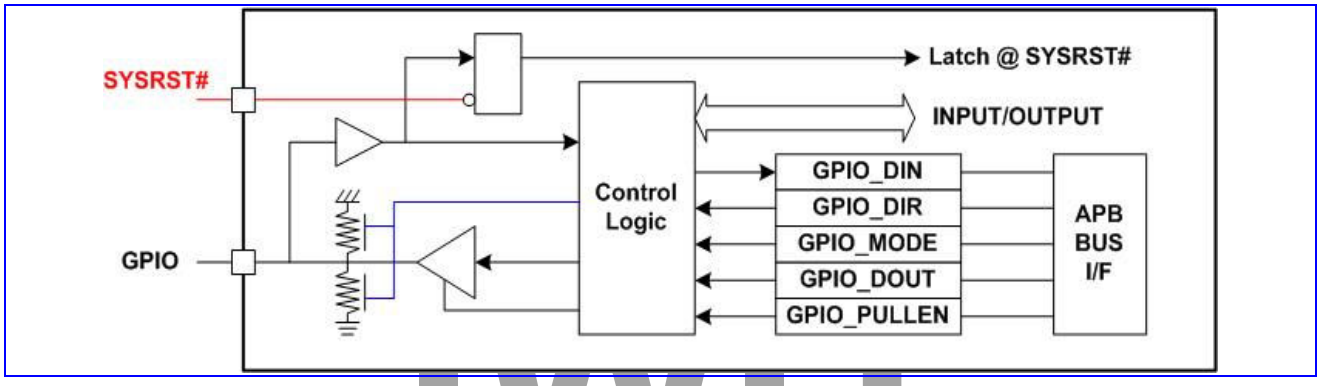

Figure 46 GPIO Block Diagram

GPIOs at RESET

Upon hardware reset (SYSRST#), GPIOs are all configured as inputs and the following alternative usages of GPIO pins are enabled:

These GPIOs are used to latch the inputs upon reset to memorize the desired configuration to make sure that the system restarts or boots in the right mode.

Multiplexing of Signals on GPIO

The GPIO pins can be multiplexed with other signals.

- DAICLK, DAIPCMIN, DAIPCMOUT, DAIRST: digital audio interface for FTA
- BPI_BUS6, BPI_BUS7, BPI_BUS8, BPI_BUS9: radio hard-wire control
- BSI_CS1: additional chip select signal for radio 3-wire interface
- LSCK, LSA0, LSDA, LSCE0#, LSCE1#: serial display interface
- LPCE1#: parallel display interface chip select signal
- NRNB, NCLE, NALE, NWEB, NREB, NCEB: nand-flash control signals
- PWM1, PWM2: pulse width modulation signal
- ALERTER: pulse width modulation signal for buzzer
- IRDA_RXD, IRDA_TXD, IRDA_PDN: IrDA control signals
- URXD2, UTXD2, URTS2, UCTS2: data and flow control signals for UART2
- URXD3, UTXD3, URTS3, UCTS3: data and flow control signals for UART3
- CMMCLK, CMRST, CMPDN, CMVREF, CMHREF, CMDAT7~CMDAT0: cmos sensor interface
- SRCLKENAI: external power on signal of the external VCXO LDO

Multiplexed of Signals on GPO

- SRCLKENA: power on signal of the external VCXO LDO
- EA25, EA24: external memory interface address bit [25:24]
- EPDN_B: external memory power down signal
- 32KHz, 6.5MHz, 13MHz, 26MHz clocks

IWIT
聯發機密不得洩漏
MTK CONFIDENTIAL
NO DISCLOSURE
IWIT

4.7.1 Register Definitions

MTK Confidential A (機密)

GPIO+0000h GPIO direction control register 1 GPIO_DIR1

Bit	15	14	13	12	11	10	9	8	7	6	5	4	3	2	1	0
Name	GPIO 15	GPIO 14	GPIO 13	GPIO 12	GPIO 11	GPIO 10	GPIO 9	GPIO 8	GPIO 7	GPIO 6	GPIO 5	GPIO 4	GPIO 3	GPIO 2	GPIO 1	GPIO 0
Type	R/W	R/W	R/W	R/W	R/W	R/W	R/W	R/W	R/W	R/W	R/W	R/W	R/W	R/W	R/W	R/W
Reset	0	0	0	0	0	0	0	0	0	0	0	0	0	0	0	0

GPIO +0010h GPIO direction control register 2 GPIO_DIR2

Bit	15	14	13	12	11	10	9	8	7	6	5	4	3	2	1	0
Name	GPIO 31	GPIO 30	GPIO 29	GPIO 28	GPIO 27	GPIO 26	GPIO 25			GPIO 22	GPIO 21	PGIO 20	GPIO 19	GPIO 18	GPIO 17	GPIO 16
Type	R/W	R/W	R/W	R/W	R/W	R/W	R/W			R/W	R/W	R/W	R/W	R/W	R/W	R/W
Reset	0	0	0	0	0	0	0			0	0	0	0	0	0	0

GPIO+0020h GPIO direction control register 3 GPIO_DIR3

Bit	15	14	13	12	11	10	9	8	7	6	5	4	3	2	1	0
Name	GPIO 47	GPIO 46	GPIO 45	GPIO 44	GPIO 43	GPIO 42	GPIO 41	GPIO 40	GPIO 39	GPIO 38	GPIO 37	GPIO 36	GPIO 35	GPIO 34	GPIO 33	GPIO 32
Type	R/W	R/W	R/W	R/W	R/W	R/W	R/W	R/W	R/W	R/W	R/W	R/W	R/W	R/W	R/W	R/W
Reset	0	0	0	0	0	0	0	0	0	0	0	0	0	0	0	0

GPIO+0030h GPIO direction control register 4 GPIO_DIR4

Bit	15	14	13	12	11	10	9	8	7	6	5	4	3	2	1	0
Name										GPIO 54	GPIO 53	GPIO 52	GPIO 51	GPIO 50	GPIO 49	GPIO 48
Type										R/W	R/W	R/W	R/W	R/W	R/W	R/W
Reset										0	0	0	0	0	0	0

GPIO*n* GPIO direction control

- **0** GPIOs are configured as input
- **1** GPIOs are configured as output

GPIO +0040h GPIO pull-up/pull-down enable register 1 GPIO_PULLEN 1

Bit	15	14	13	12	11	10	9	8	7	6	5	4	3	2	1	0
Name	GPIO 15	GPIO 14	GPIO 13	GPIO 12	GPIO 11	GPIO 10	GPIO 9	GPIO 8	GPIO 7	GPIO 6	GPIO 5	GPIO 4	GPIO 3	GPIO 2	GPIO 1	GPIO 0
Type	R/W	R/W	R/W	R/W	R/W	R/W	R/W	R/W	R/W	R/W	R/W	R/W	R/W	R/W	R/W	R/W
Reset	1	1	1	1	1	1	1	1	1	1	1	1	1	1	1	1

GPIO +0050h GPIO pull-up/pull-down enable register 2 GPIO_PULLEN 2

Bit	15	14	13	12	11	10	9	8	7	6	5	4	3	2	1	0
Name	GPIO 31	GPIO 30	GPIO 29	GPIO 28	GPIO 27	GPIO 26	GPIO 25			GPIO 22	GPIO 21	PGIO 20	GPIO 19	GPIO 18	GPIO 17	GPIO 16
Type	R/W	R/W	R/W	R/W	R/W	R/W	R/W			R/W	R/W	R/W	R/W	R/W	R/W	R/W
Reset	1	1	1	1	1	1	1			1	1	1	1	1	1	1

GPIO+0060h GPIO pull-up/pull-down enable register 3 GPIO_PULLEN 3

Bit	15	14	13	12	11	10	9	8	7	6	5	4	3	2	1	0

機密資料不得洩漏
MTK CONFIDENTIAL
NO DISCLOSURE

Name	GPIO 47	GPIO 46	GPIO 45	GPIO 44	GPIO 43	GPIO 42	GPIO 41	GPIO 40	GPIO 39	GPIO 38	GPIO 37	GPIO 36	GPIO 35	GPIO 34	GPIO 33	GPIO 32
Type	R/W	R/W	R/W	R/W	R/W	R/W	R/W	R/W	R/W	R/W	R/W	R/W	R/W	R/W	R/W	R/W
Reset	1	1	1	1	1	1	1	1	1	1	1	1	1	1	1	1

MTK Confidential A (機密)

GPIO+0070h GPIO pull-up/pull-down enable register 4 GPIO_PULLEN4

Bit	15	14	13	12	11	10	9	8	7	6	5	4	3	2	1	0
Name										GPIO 54	GPIO 53	GPIO 52	GPIO 51	GPIO 50	GPIO 49	GPIO 48
Type										R/W	R/W	R/W	R/W	R/W	R/W	R/W
Reset										1	1	1	1	1	1	1

GPIO*n* GPIO pull up/down enable

- **0** GPIOs pull up/down is not enabled
- **1** GPIOs pull up/down is enabled

GPIO +0080h GPIO data inversion control register 1 GPIO_DINV1

Bit	15	14	13	12	11	10	9	8	7	6	5	4	3	2	1	0
Name	INV15	INV14	INV13	INV12	INV11	INV10	INV9	INV8	INV7	INV6	INV5	INV4	INV3	INV2	INV1	INV0
Type	R/W	R/W	R/W	R/W	R/W	R/W	R/W	R/W	R/W	R/W	R/W	R/W	R/W	R/W	R/W	R/W
Reset	0	0	0	0	0	0	0	0	0	0	0	0	0	0	0	0

GPIO +0090h GPIO data inversion control register 2 GPIO_DINV2

Bit	15	14	13	12	11	10	9	8	7	6	5	4	3	2	1	0
Name	INV31	INV30	INV29	INV28	INV27	INV26	INV25			INV22	INV21	INV20	INV19	INV18	INV17	INV16
Type	R/W	R/W	R/W	R/W	R/W	R/W	R/W			R/W	R/W	R/W	R/W	R/W	R/W	R/W
Reset	0	0	0	0	0	0	0			0	0	0	0	0	0	0

GPIO +00A0h GPIO data inversion control register 3 GPIO_DINV3

Bit	15	14	13	12	11	10	9	8	7	6	5	4	3	2	1	0
Name	INV47	INV46	INV45	INV44	INV43	INV42	INV41	INV40	INV39	INV38	INV37	INV36	INV35	INV34	INV33	INV32
Type	R/W	R/W	R/W	R/W	R/W	R/W	R/W	R/W	R/W	R/W	R/W	R/W	R/W	R/W	R/W	R/W
Reset	0	0	0	0	0	0	0	0	0	0	0	0	0	0	0	0

GPIO+00B0h GPIO data inversion control register 4 GPIO_DINV4

Bit	15	14	13	12	11	10	9	8	7	6	5	4	3	2	1	0
Name										INV54	INV53	INV52	INV51	INV50	INV49	INV48
Type										R/W	R/W	R/W	R/W	R/W	R/W	R/W
Reset										0	0	0	0	0	0	0

INVn GPIO inversion control

- **0** GPIOs data inversion disable
- **1** GPIOs data inversion enable

GPIO +00C0h GPIO data output register 1 GPIO_DOUT1

Bit	15	14	13	12	11	10	9	8	7	6	5	4	3	2	1	0
Name	GPIO 15	GPIO 14	GPIO 13	GPIO 12	GPIO 11	GPIO 10	GPIO 9	GPIO 8	GPIO 7	GPIO 6	GPIO 5	GPIO 4	GPIO 3	GPIO 2	GPIO 1	GPIO 0
Type	R/W	R/W	R/W	R/W	R/W	R/W	R/W	R/W	R/W	R/W	R/W	R/W	R/W	R/W	R/W	R/W
Reset	0	0	0	0	0	0	0	0	0	0	0	0	0	0	0	0

GPIO +00D0h GPIO data output register 2 GPIO_DOUT2

Bit	15	14	13	12	11	10	9	8	7	6	5	4	3	2	1	0
Name	GPIO 31	GPIO 30	GPIO 29	GPIO 28	GPIO 27	GPIO 26	GPIO 25			GPIO 22	GPIO 21	PGIO 20	GPIO 19	GPIO 18	GPIO 17	GPIO 16

聯發科技公司 機密 MTK CONFIDENTIAL NO DISCLOSURE

Type	R/W	R/W	R/W	R/W	R/W	R/W	R/W			R/W	R/W	R/W	R/W	R/W	R/W	R/W
Reset	0	0	0	0	0	0	0			0	0	0	0	0	0	0

MTK Confidential A (機密)

GPIO +00E0h GPIO data output register 3 GPIO_DOUT3

Bit	15	14	13	12	11	10	9	8	7	6	5	4	3	2	1	0
Name	GPIO 47	GPIO 46	GPIO 45	GPIO 44	GPIO 43	GPIO 42	GPIO 41	GPIO 40	GPIO 39	GPIO 38	GPIO 37	GPIO 36	GPIO 35	GPIO 34	GPIO 33	GPIO 32
Type	R/W	R/W	R/W	R/W	R/W	R/W	R/W	R/W	R/W	R/W	R/W	R/W	R/W	R/W	R/W	R/W
Reset	0	0	0	0	0	0	0	0	0	0	0	0	0	0	0	0

GPIO+00F0h GPIO data output register 4 GPIO_DOUT4

Bit	15	14	13	12	11	10	9	8	7	6	5	4	3	2	1	0
Name										GPIO 54	GPIO 53	GPIO 52	GPIO 51	GPIO 50	GPIO 49	GPIO 48
Type										R/W	R/W	R/W	R/W	R/W	R/W	R/W
Reset										0	0	0	0	0	0	0

GPIOn GPIO data output control

0 GPIOs data output 1

1 GPIOs data output 0

GPIO +0100h GPIO data Input register 1 GPIO_DIN1

Bit	15	14	13	12	11	10	9	8	7	6	5	4	3	2	1	0
Name	GPIO 15	GPIO 14	GPIO 13	GPIO 12	GPIO 11	GPIO 10	GPIO 9	GPIO 8	GPIO 7	GPIO 6	GPIO 5	GPIO 4	GPIO 3	GPIO 2	GPIO 1	GPIO 0
Type	RO	RO	RO	RO	RO	RO	RO	RO	RO	RO	RO	RO	RO	RO	RO	RO
Reset	X	X	X	X	X	X	X	X	X	X	X	X	X	X	X	X

聯發機密不得洩漏

GPIO +0110h GPIO data Input register 2 GPIO_DIN2

Bit	15	14	13	12	11	10	9	8	7	6	5	4	3	2	1	0
Name	GPIO 31	GPIO 30	GPIO 29	GPIO 28	GPIO 27	GPIO 26	GPIO 25			GPIO 22	GPIO 21	PGIO 20	GPIO 19	GPIO 18	GPIO 17	GPIO 16
Type	RO	RO	RO	RO	RO	RO	RO			RO	RO	RO	RO	RO	RO	RO
Reset	X	X	X	X	X	X	X			X	X	X	X	X	X	X

MTK CONFIDENTIAL

GPIO +0120h GPIO data Input register 3 GPIO_DIN3

Bit	15	14	13	12	11	10	9	8	7	6	5	4	3	2	1	0
Name	GPIO 47	GPIO 46	GPIO 45	GPIO 44	GPIO 43	GPIO 42	GPIO 41	GPIO 40	GPIO 39	GPIO 38	GPIO 37	GPIO 36	GPIO 35	GPIO 34	GPIO 33	GPIO 32
Type	RO	RO	RO	RO	RO	RO	RO	RO	RO	RO	RO	RO	RO	RO	RO	RO
Reset	X	X	X	X	X	X	X	X	X	X	X	X	X	X	X	X

NO DISCLOSURE

GPIO+0130h GPIO data input register 4 GPIO_DIN4

Bit	15	14	13	12	11	10	9	8	7	6	5	4	3	2	1	0
Name										GPIO 54	GPIO 53	GPIO 52	GPIO 51	GPIO 50	GPIO 49	GPIO 48
Type										RO	RO	RO	RO	RO	RO	RO
Reset										X	X	X	X	X	X	X

GPIOn GPIOs data input

GPIO +0140h GPO data output register GPO_DOUT

Bit	15	14	13	12	11	10	9	8	7	6	5	4	3	2	1	0
Name													GPO3	GPO2	GPO1	GPO0
Type													R/W	R/W	R/W	R/W

Reset													0	0	0	0

MTK Confidential A (機密)

GPIO +0150h GPIO mode control register 1 GPIO_MODE1

Bit	15	14	13	12	11	10	9	8	7	6	5	4	3	2	1	0
Name	GPIO7_M		GPIO6_M		GPIO5_M		GPIO4_M		GPIO3_M		GPIO2_M		GPIO1_M		GPIO0_M	
Type	R/W		R/W		R/W		R/W		R/W		R/W		R/W		R/W	
Reset	00		00		00		00		00		00		00		00	

GPIO0_M GPIO mode selection
- **00** Configured as GPIO function
- **01** Reserved
- **10** Reserved
- **11** External interrupt 4

GPIO1_M GPIO mode selection
- **00** Configured as GPIO function
- **01** Reserved
- **10** Reserved
- **11** External interrupt 5

GPIO2_M GPIO mode selection
- **00** Configured as GPIO function
- **01** Resreved
- **10** UART1 CTS signal
- **11** External interrupt 6

GPIO3_M GPIO mode selection
- **00** Configured as GPIO function
- **01** BSI RF calibration data input
- **10** UART1 RTS signal
- **11** External interrupt 7

GPIO4_M GPIO mode selection
- **00** Configured as GPIO function
- **01** Digital Audio Interface Reset Signal Input
- **10** IrDA Power Down Control Signal
- **11** DSP Clock

GPIO5_M GPIO mode selection
- **00** Configured as GPIO function
- **01** EDI Clock
- **10** 26MHz Clock
- **11** AHB Clock

GPIO6_M GPIO mode selection
- **00** Configured as GPIO function
- **01** EDI word select
- **10** 32KHz Clock
- **11** MCU Clock

GPIO7_M GPIO mode selection
- **00** Configured as GPIO function
- **01** EDI serial data
- **10** Resreved
- **11** Slow Clock

IWIT
聯發機密不得洩漏
MTK CONFIDENTIAL
NO DISCLOSURE
IWIT

GPIO +0160h GPIO mode control register 2 GPIO_MODE2

MTK Confidential A (機密)

Bit	15	14	13	12	11	10	9	8	7	6	5	4	3	2	1	0
Name	GPIO15_M		GPIO14_M		GPIO13_M		GPIO12_M		GPIO11_M		GPIO10_M		GPIO9_M		GPIO8_M	
Type	R/W		R/W		R/W		R/W		R/W		R/W		R/W		R/W	
Reset	00		00		00		00		00		00		00		00	

GPIO8_M GPIO mode selection
- **00** Configured as GPIO function
- **01** I^2C Clock
- **10** Reserved
- **11** Reserved

GPIO9_M GPIO mode selection
- **00** Configured as GPIO function
- **01** I^2C Data
- **10** Reserved
- **11** Reserved

GPIO10_M GPIO mode selection
- **00** Configured as GPIO function
- **01** CMOS sensor reset signal output
- **10** Reserved
- **11** Reserved

GPIO11_M GPIO mode selection
- **00** Configured as GPIO function
- **01** CMOS sensor power down control
- **10** Reserved
- **11** Reserved

GPIO12_M GPIO mode selection
- **00** Configured as GPIO function
- **01** CMOS sensor vertical reference signal input
- **10** MIRQ Signal
- **11** Reserved

GPIO13_M GPIO mode selection
- **00** Configured as GPIO function
- **01** CMOS sensor horizontal reference signal input
- **10** MFIQ Signal
- **11** Reserved

GPIO14_M GPIO mode selection
- **00** Configured as GPIO function
- **01** CMOS sensor master clock output
- **10** 26MHz Clock
- **11** 6.5MHz Clock

GPIO15_M GPIO mode selection
- **00** Configured as GPIO function
- **01** CMOS sensor data input 7
- **10** MMC4.0 data 7
- **11** Reserved

IWIT
聯發機密不得洩漏
MTK CONFIDENTIAL
NO DISCLOSURE
IWIT

GPIO +0170h GPIO mode control register 3 GPIO_MODE3

Bit	15	14	13	12	11	10	9	8	7	6	5	4	3	2	1	0

Name		GPIO22_M	GPIO21_M	GPIO20_M	GPIO19_M	GPIO18_M	GPIO17_M	GPIO16_M
Type		R/W	R/W	R/W	R/W	R/W	R/W	R/W
Reset		00	00	00	00	00	00	00

MTK Confidential A (機密)

GPIO16_M GPIO mode selection
- **00** Configured as GPIO function
- **01** CMOS sensor data input 6
- **10** MMC4.0 data 6
- **11** DSP ICE clock

GPIO17_M GPIO mode selection
- **00** Configured as GPIO function
- **01** CMOS sensor data input 5
- **10** MMC4.0 data 5
- **11** DSP ICE data

GPIO18_M GPIO mode selection
- **00** Configured as GPIO function
- **01** CMOS sensor data input 4
- **10** MMC4.0 data 4
- **11** DSP ICE mode select

GPIO19_M GPIO mode selection
- **00** Configured as GPIO function
- **01** CMOS sensor data input 3
- **10** DSP General Purpose Output 3
- **11** TDMA Timer Uplink Frame Enable Signal

GPIO20_M GPIO mode selection
- **00** Configured as GPIO function
- **01** CMOS sensor data input 2
- **10** DSP General Purpose Output 2
- **11** TDMA Timer Uplink Frame Sync Signal

GPIO21_M GPIO mode selection
- **00** Configured as GPIO function
- **01** CMOS sensor data input 1
- **10** DSP General Purpose Output 1
- **11** TDMA Timer Downlink Frame Enable Signal

GPIO22_M GPIO mode selection
- **00** Configured as GPIO function
- **01** CMOS sensor data input 0
- **10** DSP General Purpose Output 0
- **11** TDMA Timer Downlink Frame Sync Signal

IWIT
聯發機密不得洩漏
MTK CONFIDENTIAL
NO DISCLOSURE

GPIO +0180h GPIO mode control register 4 GPIO_MODE4

Bit	15	14	13	12	11	10	9	8	7	6	5	4	3	2	1	0
Name	GPIO31_M		GPIO30_M		GPIO29_M		GPIO28_M		GPIO27_M		GPIO26_M		GPIO25_M			
Type	R/W		R/W		R/W		R/W		R/W		R/W		R/W			
Reset	00		00		00		00		00		00		00			

GPIO25_M GPIO mode selection
- **00** Configured as GPIO function
- **01** BPI_BUS6
- **10** PWM1
- **11** 13MHz Clock

MTK Confidential A (機密)

GPIO26_M GPIO mode selection

- **00** Configured as GPIO function
- **01** BPI_BUS7
- **10** PWM2
- **11** 32KHz Clock

GPIO27_M GPIO mode selection

- **00** Configured as GPIO function
- **01** BPI_BUS8
- **10** Alerter
- **11** 26MHz Clock

GPIO28_M GPIO mode selection

- **00** Configured as GPIO function
- **01** BPI_BUS9
- **10** BSI_CS1
- **11** Reserved

GPIO29_M GPIO mode selection

- **00** Configured as GPIO function
- **01** Serial LCD Interface/PM IC Interface Clock Signal
- **10** TDMA Timer Debug Port Clock Output
- **11** DSP Task ID 0

GPIO30_M GPIO mode selection

- **00** Configured as GPIO function
- **01** Serial LCD Interface Address/Data Signal
- **10** TDMA Timer Debug Port Data Output 1
- **11** TDMA Timer DIRQ Signal

GPIO31_M GPIO mode selection

- **00** Configured as GPIO function
- **01** Serial LCD Interface Data/PM IC Interface Data Signal
- **10** TDMA Timer Debug Port Data Output 0
- **11** TDMA Timer CTIRQ2 Signal

IWIT
聯發機密不得洩漏
MTK CONFIDENTIAL

GPIO +0190h GPIO mode control register 5 GPIO_MODE5

Bit	15	14	13	12	11	10	9	8	7	6	5	4	3	2	1	0
Name	GPIO39_M		GPIO38_M		GPIO37_M		GPIO36_M		GPIO35_M		GPIO34_M		GPIO33_M		GPIO32_M	
Type	R/W		R/W		R/W		R/W		R/W		R/W		R/W		R/W	
Reset	00		00		00		00		00		00		00		00	

NCDSCLOSURE

GPIO32_M GPIO mode selection

- **00** Configured as GPIO function
- **01** Serial LCD Interface/PM IC Interface Chip Select Signal 0
- **10** TDMA Timer Debug Port Frame Sync Signal
- **11** TDMA Timer CTIRQ1 Signal

GPIO33_M GPIO mode selection

- **00** Configured as GPIO function
- **01** Serial LCD Interface Chip Select Signal 1
- **10** Parallel LCD Interface Chip Select Signal 2
- **11** TDMA Timer Event Validate Signal

GPIO34_M GPIO mode selection

- **00** Configured as GPIO function
- **01** Parallel LCD Interface Chip Select Signal 1

IWIT

MTK Confidential A (機密)

10 Nandflash Interface Chip Select Signal 1
11 Reserved

GPIO35_M GPIO mode selection
00 Configured as GPIO function
01 NAND/LCD data 17
10 Keypad column bit 5
11 VPP65 programming voltage indication of OTP macros

GPIO36_M GPIO mode selection
00 Configured as GPIO function
01 NAND/LCD data 16
10 Keypad column bit 6
11 Reserved

GPIO37_M GPIO mode selection
00 Configured as GPIO function
01 Nandflash Interface Ready/Busy Signal
10 DSP Task ID 1
11 Reserved

GPIO38_M GPIO mode selection
00 Configured as GPIO function
01 Nandflash Interface Command Latch Signal
10 DSP Task ID 2
11 Reserved

GPIO39_M GPIO mode selection
00 Configured as GPIO function
01 Nandflash Interface Address Latch Signal
10 DSP Task ID 3
11 Reserved

IWIT
聯發機密不得洩漏
MTK CONFIDENTIAL

GPIO +01A0h GPIO mode control register 6 GPIO_MODE6

Bit	15	14	13	12	11	10	9	8	7	6	5	4	3	2	1	0
Name	GPIO47_M		GPIO46_M		GPIO45_M		GPIO44_M		GPIO43_M		GPIO42_M		GPIO41_M		GPIO40_M	
Type	R/W		R/W		R/W		R/W		R/W		R/W		R/W		R/W	
Reset	00		00		00		00		00		00		00		00	

NO DISCLOSURE

GPIO40_M GPIO mode selection
00 Configured as GPIO function
01 Nandflash Interface Write Strobe Signal
10 DSP Task ID 4
11 Reserved

GPIO41_M GPIO mode selection
00 Configured as GPIO function
01 Nandflash Interface Read Strobe Signal
10 DSP Task ID 5
11 Reserved

GPIO42_M GPIO mode selection
00 Configured as GPIO function
01 Nandflash Interface Chip Select Signal 0
10 DSP Task ID 6
11 Reserved

GPIO43_M GPIO mode selection

IWIT

MTK Confidential A (機密)

00 Configured as GPIO function
01 VCXO Enable Signal Input
10 Reserved
11 Reserved

GPIO44_M GPIO mode selection
00 Configured as GPIO function
01 MS/SD/MMC/MS PRO Write Protection Signal
10 Reserved
11 Reserved

GPIO45_M GPIO mode selection
00 Configured as GPIO function
01 MS/SD/MMC Card Insertion Signal
10 Reserved
11 Reserved

GPIO46_M GPIO mode selection
00 Configured as GPIO function
01 SIM Interface Voltage Select Signal
10 Reserved
11 Reserved

GPIO47_M GPIO mode selection
00 Configured as GPIO function
01 UART2 RXD Signal
10 UART3 CTS Signal
11 IrDA RXD Signal

IWIT
聯發機密不得洩漏

GPIO +01B0h GPIO mode control register 7 GPIO_MODE7

Bit	15	14	13	12	11	10	9	8	7	6	5	4	3	2	1	0
Name			GPIO54		GPIO53		GPIO52		GPIO51		GPIO50		GPIO49		GPIO48	
Type			R/W		R/W		R/W		R/W		R/W		R/W		R/W	
Reset			0		0		0		0		0		0		0	

MTK CONFIDENTIAL

GPIO48_M GPIO mode selection
00 Configured as GPIO function
01 UART2 TXD Signal
10 UART3 RTS Signal
11 IrDA TXD Signal

NO DISCLOSURE

GPIO49_M GPIO mode selection
00 Configured as GPIO function
01 UART3 RXD Signal
10 UART2 CTS Signal
11 Reserved

GPIO50_M GPIO mode selection
00 Configured as GPIO function
01 UART3 TXD Signal
10 UART2 RTS Signal
11 Reserved

IWIT

GPIO51_M GPIO mode selection
00 Configured as GPIO function
01 Digital Audio Interface Clock Output
10 Reserved

11 Reserved

GPIO52_M GPIO mode selection

00 Configured as GPIO function

MTK Confidential A (機密)

01 Digital Audio Interface PCM Data Output

10 Reserved

11 Reserved

GPIO53_M GPIO mode selection

00 Configured as GPIO function

01 Digital Audio Interface PCM Data Input

10 Reserved

11 Reserved

GPIO54_M GPIO mode selection

00 Configured as GPIO function

01 Digital Audio Interface Synchronization Signal Output

10 Resreved

11 Reserved

GPIO +01C0h GPO mode control register 1 GPO_MODE1

Bit	15	14	13	12	11	10	9	8	7	6	5	4	3	2	1	0
Name									GPO3_M		GPO2_M		GPO1_M		GPO0_M	
Type									R/W		R/W		R/W		R/W	
Reset									01		01		01		01	

GPO0_M GPO mode selection

00 Configured as GPO function

01 VCXO Enable Signal Output Active High

10 Reserved

11 Reserved

GPO1_M GPO mode selection

00 Configured as GPO function

01 External Memory Interface Address 24

10 26MHz Clock

11 32KHz Clock

GPO2_M GPO mode selection

00 Configured as GPO function

01 External Memory Interface Address25

10 32KHz Clock

11 26MHz Clock

GPO3_M GPO mode selection

00 Configured as GPO function

01 External Memory Interface Power Down Control for Pseudo SRAM

10 6.5MHz Clock

11 26MHz Clock

GPIO+xxx4h GPIO xxx register SET GPIO_XXX_SET

For all registers addresses listed above, writing to the +4h addresse offset will perform a bit-wise **OR** function between the 16bit written value and the 16bit register value already existing in the corresponding GPIO_xxx registers.

Eg.

If GPIO_DIR1 (GPIO+0000h) = 16'h0F0F,

writing GPIO_DIR1_SET (GPIO+0004h) = 16'F0F0 will result in GPIO_DIR1 = 16'hFFFF.

IWIT
聯發機密不得洩漏
MTK CONFIDENTIAL
NO DISCLOSURE
IWIT

GPIO+xxx8h GPIO xxx register CLR GPIO_XXX_CLR

For all registers addresses listed above, writing to the +8h addresse offset will perform a bit-wise **AND-NOT** function between the 16bit written value and the 16bit register value already existing in the corresponding GPIO_xxx registers.
Eg.
If GPIO_DIR1 (GPIO+0000h) = 16'h0F0F,
writing GPIO_DIR1_CLR (GPIO+0008h) = 16'0F0F will result in GPIO_DIR1 = 16'h0000.

CONFG +0704h LCD/CAM I/O driving strength control ACIF_CON1

Bit	15	14	13	12	11	10	9	8	7	6	5	4	3	2	1	0
Name				SLCD_SR	SLCD_E2	SLCD_E4	PLCD_SR	PLCD_E2	PLCD_E4	CAM_PD	CAM_E2	CAM_E4	CAM_E8			
Type				R/W	R/W	R/W	R/W	R/W	R/W	R/W	R/W	R/W	R/W			
Reset				0	0	0	0	0	0	0	0	0	0			

CAM _E8 The driving strength control of the CMMCLK pin (CMOS sensor master clock).
CAM _E4 The driving strength control of the CMMCLK pin.
CAM _E2 The driving strength control of the CMMCLK pin.
CAM _PD Pulldown control of CMOS sensor pins (CMMCLK, CMPCLK, CMRST, CMPDN, CMVREF, CMHREF, CMDAT7~ CMDAT0).
PLCD _E4 The driving strength control of the parallel LCM control interface and NFI/LCM shared data bus.
PLCD _E2 The driving strength control of the parallel LCM control interface and NFI/LCM shared data bus.
PLCD_SR The slew rate control of the parallel LCM control interface and NFI/LCM shared data bus.
SLCD_E4 The driving strength control of the serial LCM interface.
SLCD _E2 The driving strength control of the serial LCM interface.
SLCD _SR The slew rate control of the serial LCM interface.

聯發機密 不得洩漏
MTK CONFIDENTIAL
NO DISCLOSURE

4.8 General Purpose Timer

4.8.1 General Description

Three general-purpose timers are provided. The timers are 16 bits long and run independently of each other, although they share the same clock source. Two timers can operate in one of two modes: one-shot mode and auto-repeat mode; the other is a free running timer. In one-shot mode, when the timer counts down and reaches zero, it is halted. In auto-repeat mode, when the timer reaches zero, it simply resets to countdown initial value and repeats the countdown to zero; this loop repeats until the disable signal is set to 1. Regardless of the timer's mode, if the countdown initial value (i.e. GPTIMER1_DAT for GPT1 or GPTIMER_DAT2 for GPT2) is written when the timer is running, the new initial value does not take effect until the next time the timer is restarted. In auto-repeat mode, the new countdown start value is used on the next countdown iteration. Therefore, before enabling the gptimer, the desired values for GPTIMER_DAT and the GPTIMER_PRESCALER registers must first be set.

4.8.2 Register Definitions

GPT +0000h GPT1 Control register GPTIMER1_CON

Bit	15	14	13	12	11	10	9	8	7	6	5	4	3	2	1	0
Name	EN	MODE														
Type	R/W	R/W														
Reset	0	0														

MODE This register controls GPT1 to count repeatedly (in a loop) or just one-shot.

- **0** One-shot mode is selected. MTK Confidential A (機密)
- **1** Auto-repeat mode is selected.

EN This register controls GPT1 to start counting or to stop.

- **0** GPT1 is disabled.
- **1** GPT1 is enabled.

GPT +0004h GPT1 Time-Out Interval register — GPTIMER1_DAT

Bit	15	14	13	12	11	10	9	8	7	6	5	4	3	2	1	0
Name	CNT [15:0]															
Type	R/W															
Reset	FFFFh															

CNT [15:0] Initial counting value. GPT1 counts down from GPTIMER1_DAT. When GPT1 counts down to zero, a GPT1 interrupt is generated.

GPT +0008h GPT2 Control register — GPTIMER2_CON

Bit	15	14	13	12	11	10	9	8	7	6	5	4	3	2	1	0
Name	EN	MODE														
Type	R/W	R/W														
Reset	0	0														

MODE This register controls GPT2 to count repeatedly (in a loop) or just one-shot.

- **0** One-shot mode is selected
- **1** Auto-repeat mode is selected

EN This register controls GPT2 to start counting or to stop.

- **0** GPT2 is disabled.
- **1** GPT2 is enabled.

GPT +000Ch GPT2 Time-Out Interval register — GPTIMER2_DAT

Bit	15	14	13	12	11	10	9	8	7	6	5	4	3	2	1	0
Name	CNT [15:0]															
Type	R/W															
Reset	FFFFh															

CNT [15:0] Initial counting value. GPT2 counts down from GPTIMER2_DAT. When GPT2 counts down to zero, a GPT2 interrupt is generated.

GPT +0010h GPT Status register — GPTIMER_STA

Bit	15	14	13	12	11	10	9	8	7	6	5	4	3	2	1	0
Name															GPT2	GPT1
Type															RC	RC
Reset															0	0

This register illustrates the gptimer timeout status. Each flag is set when the corresponding timer countdown completes, and can be cleared when the CPU reads the status register.

GPT +0014h GPT1 Prescaler register — GPTIMER1_PRESCALER

Bit	15	14	13	12	11	10	9	8	7	6	5	4	3	2	1	0

IWIT
聯發機密不得洩漏
MTK CONFIDENTIAL
NO DISCLOSURE
IWIT

Name														PRESCALER [2:0]
Type														R/W
Reset														100b

PRESCALER This register controls the counting clock for gptimer1.

000 16 KHz
001 8 KHz
010 4 KHz
011 2 KHz
100 1 KHz
101 500 Hz
110 250 Hz
111 125 Hz

IWIT

GPT +0018h GPT2 Prescaler register

GPTIMER2_PRESCALER

Bit	15	14	13	12	11	10	9	8	7	6	5	4	3	2	1	0
Name														PRESCALER [2:0]		
Type														R/W		
Reset														100b		

PRESCALER This register controls the counting clock for gptimer2.

000 16 KHz
001 8 KHz
010 4 KHz
011 2 KHz
100 1 KHz
101 500 Hz
110 250 Hz
111 125 Hz

聯發機密不得洩漏
MTK CONFIDENTIAL

GPT+001Ch GPT3 Control register

GPTIMER3_CON

Bit	15	14	13	12	11	10	9	8	7	6	5	4	3	2	1	0
Name																EN
Type																R/W
Reset																0

NO DISCLOSURE

EN This register controls GPT3 to start counting or to stop.

0 GPT3 is disabled.
1 GPT3 is enabled.

GPT+0020h GPT3 Time-Out Interval register

GPTIMER3_DAT

Bit	15	14	13	12	11	10	9	8	7	6	5	4	3	2	1	0
Name	CNT[15:0]															
Type	RO															
Reset	0															

IWIT

CNT [15:0] If EN=1, GPT3 is a free running timer . Software reads this register for the countdown start value for GPT3.

GPT+0024h GPT3 Prescaler register

MTK Confidential A (機密)

GPTIMER3_PRESCALER

Bit	15	14	13	12	11	10	9	8	7	6	5	4	3	2	1	0
Name														PRESCALER [2:0]		
Type														R/W		
Reset														100b		

PRESCALER This register controls the counting clock for gptimer3.

- **000** 16 KHz
- **001** 8 KHz
- **010** 4 KHz
- **011** 2 KHz
- **100** 1 KHz
- **101** 500 Hz
- **110** 250 Hz
- **111** 125 Hz

IWIT

4.9 UART

4.9.1 General Description

聯發機密不得洩漏

The baseband chipset houses three UARTs. The UARTs provide full duplex serial communication channels between baseband chipset and external devices.

The UART has M16C450 and M16550A modes of operation, which are compatible with a range of standard software drivers. The extensions have been designed to be broadly software compatible with 16550A variants, but certain areas offer no consensus.

MTK CONFIDENTIAL

In common with the M16550A, the UART supports word lengths **from five to eight bits**, **an optional parity bit** and one or two stop bits, and is fully programmable by an 8-bit CPU interface. A 16-bit programmable baud rate generator and an 8-bit scratch register are included, together with separate transmit and receive FIFOs. Eight modem control lines and a diagnostic loop-back mode are provided. The UART also includes two DMA handshake lines, used to indicate when the FIFOs are ready to transfer data to the CPU. Interrupts can be generated from any of the 10 sources.

NO DISCLOSURE

Note: The UART has been designed so that all internal operations are synchronized by the CLK signal. This synchronization results in minor timing differences between the UART and the industry standard 16550A device, which means that the core is not clock for clock identical to the original device.

After a hardware reset, the UART is in M16C450 mode. Its FIFOs can be enabled and the UART can then enter M16550A mode. The UART adds further functionality beyond M16550A mode. Each of the extended functions can be selected individually under software control.

The UART provides more powerful enhancements than the industry-standard 16550:

- Hardware flow control. This feature is very useful when the ISR latency is hard to predict and control in the embedded applications. The MCU is relieved of having to fetch the received data within a fixed amount of time.
- Output of an IR-compatible electrical pulse with a width 3/16 of that of a regular bit period.

IWIT

Note: In order to enable any of the enhancements, the Enhanced Mode bit, EFR[4], must be set. If EFR[4] is not set,

IER[7:5], FCR[5:4], ISR[5:4] and MCR[7:6] cannot be written. The Enhanced Mode bit ensures that the UART is backward compatible with software that has been written for 16C450 and 16550A devices.

MTK Confidential A (機密)

Figure 47 shows the block diagram of the UART device.

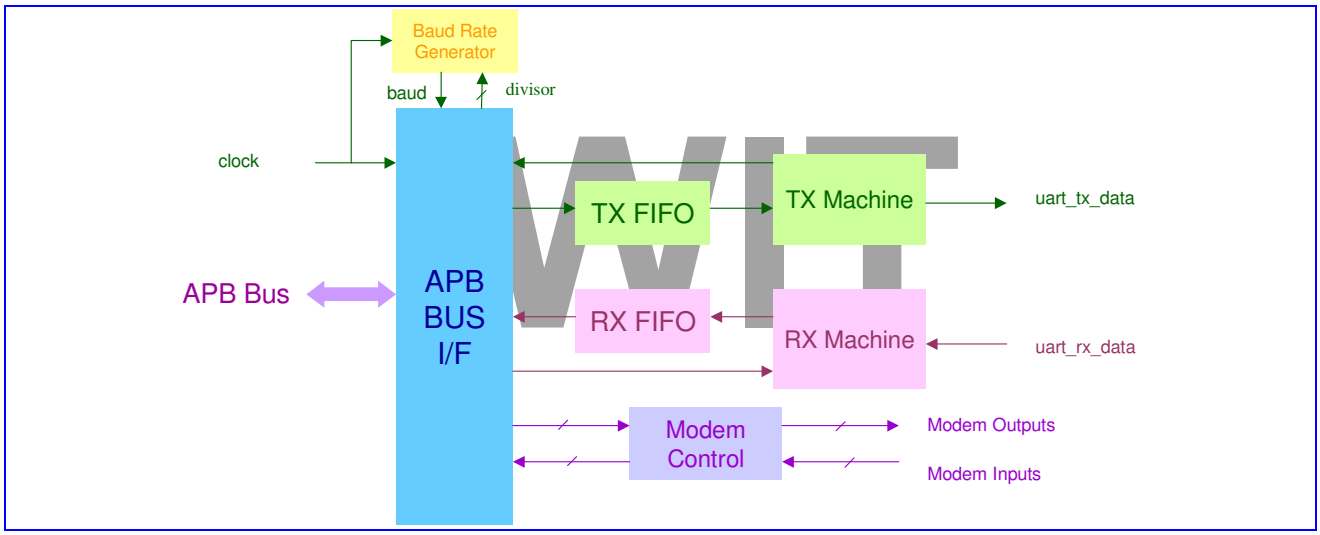

Figure 47 Block Diagram of UART

4.9.2 Register Definitions

n = 1, 2, 3; for uart1, uart2 and uart3 respectively.

聯發機密不得洩漏

UARTn+0000h RX Buffer Register — UARTn_RBR

Bit	15	14	13	12	11	10	9	8	7	6	5	4	3	2	1	0
Name									RBR[7:0]							
Type									RO							

RBR RX Buffer Register. Read-only register. The received data can be read by accessing this register. Modified when LCR[7] = 0.

MTK CONFIDENTIAL

UARTn+0000h TX Holding Register — UARTn_THR

Bit	15	14	13	12	11	10	9	8	7	6	5	4	3	2	1	0
Name									THR[7:0]							
Type									WO							

THR TX Holding Register. Write-only register. The data to be transmitted is written to this register, and then sent to the PC via serial communication.
Modified when LCR[7] = 0.

NO DISCLOSURE

UARTn+0004h Interrupt Enable Register — UARTn_IER

Bit	15	14	13	12	11	10	9	8	7	6	5	4	3	2	1	0
Name									CTSI	RTSI	XOFFI	X	EDSSI	ELSI	ETBEI	ERBFI
Type									R/W							
Reset									0							

IER By storing a '1' to a specific bit position, the interrupt associated with that bit is enabled. Otherwise, the interrupt is disabled.
IER[3:0] are modified when LCR[7] = 0.
IER[7:4] are modified when LCR[7] = 0 & EFR[4] = 1.

CTSI Masks an interrupt that is generated when a rising edge is detected on the CTS modem control line.

MTK

Note: This interrupt is only enabled when hardware flow control is enabled.

0 Unmask an interrupt that is generated when a rising edge is detected on the CTS modem control line.

1 Mask an interrupt that is generated when a rising edge is detected on the CTS modem control line.

MTK Confidential A (機密)

RTSI Masks an interrupt that is generated when a rising edge is detected on the RTS modem control line.

Note: This interrupt is only enabled when hardware flow control is enabled.

0 Unmask an interrupt that is generated when a rising edge is detected on the RTS modem control line.

1 Mask an interrupt that is generated when a rising edge is detected on the RTS modem control line.

XOFFI Masks an interrupt that is generated when an XOFF character is received.

Note: This interrupt is only enabled when software flow control is enabled.

0 Unmask an interrupt that is generated when an XOFF character is received.

1 Mask an interrupt that is generated when an XOFF character is received.

EDSSI When set ("1"), an interrupt is generated if DDCD, TERI, DDSR or DCTS (MSR[4:1]) becomes set.

0 No interrupt is generated if DDCD, TERI, DDSR or DCTS (MSR[4:1]) becomes set.

1 An interrupt is generated if DDCD, TERI, DDSR or DCTS (MSR[4:1]) becomes set.

ELSI When set ("1"), an interrupt is generated if BI, FE, PE or OE (LSR[4:1]) becomes set.

0 No interrupt is generated if BI, FE, PE or OE (LSR[4:1]) becomes set.

1 An interrupt is generated if BI, FE, PE or OE (LSR[4:1]) becomes set.

ETBEI When set ("1"), an interrupt is generated if the TX Holding Register is empty or the contents of the TX FIFO have been reduced to its Trigger Level.

0 No interrupt is generated if the TX Holding Register is empty or the contents of the TX FIFO have been reduced to its Trigger Level.

1 An interrupt is generated if the TX Holding Register is empty or the contents of the TX FIFO have been reduced to its Trigger Level.

聯發機密不得洩漏

ERBFI When set ("1"), an interrupt is generated if the RX Buffer contains data.

0 No interrupt is generated if the RX Buffer contains data.

1 An interrupt is generated if the RX Buffer contains data.

UARTn+0008h Interrupt Identification Register UARTn_IIR

Bit	15	14	13	12	11	10	9	8	7	6	5	4	3	2	1	0
Name									FIFOE		ID4	ID3	ID2	ID1	ID0	NINT
Type									RO							
Reset									0	0	0	0	0	0	0	1

IIR Identify if there are pending interrupts; ID4 and ID3 are presented only when EFR[4] = 1.

The following table gives the IIR[5:0] codes associated with the possible interrupts:

IIR[5:0]	Priority Level	Interrupt	Source
000001	-	No interrupt pending	
000110	1	Line Status Interrupt	BI, FE, PE or OE set in LSR
000100	2	RX Data Received	RX Data received or RX Trigger Level reached.
001100	2	RX Data Timeout	Timeout on character in RX FIFO.
000010	3	TX Holding Register Empty	TX Holding Register empty or TX FIFO Trigger Level reached.
000000	4	Modem Status change	DDCD, TERI, DDSR or DCTS set in MSR
010000	5	Software Flow Control	XOFF Character received
100000	6	Hardware Flow Control	CTS or RTS Rising Edge

Table 27 The IIR[5:0] codes associated with the possible interrupts

Line Status Interrupt: A RX Line Status Interrupt (IIR[5:0`] == 000110b) is generated if ELSI (IER[2]) is set and any of BI, FE, PE or OE (LSR[4:1]) becomes set. The interrupt is cleared by reading the Line Status Register.

MTK CONFIDENTIAL
NO DISCLOSURE
IWIT
IWIT

RX Data Received Interrupt: A RX Received interrupt (IER[5:0] == 000100b) is generated if EFRBI (IER[0]) is set and either RX Data is placed in the RX Buffer Register or the RX Trigger Level is reached. The interrupt is cleared by reading the RX Buffer Register or the RX FIFO (if enabled).

MTK Confidential A (機密)

RX Data Timeout Interrupt:

When virtual FIFO mode is disabled, RX Data Timeout Interrupt is generated if all of the following apply:

1. FIFO contains at least one character;
2. The most recent character was received longer than four character periods ago (including all start, parity and stop bits);
3. The most recent CPU read of the FIFO was longer than four character periods ago.

The timeout timer is restarted on receipt of a new byte from the RX Shift Register, or on a CPU read from the RX FIFO.

The RX Data Timeout Interrupt is enabled by setting EFRBI (IER[0]) to 1, and is cleared by reading RX FIFO.

When virtual FIFO mode is enabled, RX Data Timeout Interrupt is generated if all of the following apply:

1. FIFO is empty;
2. The most recent character was received longer than four character periods ago (including all start, parity and stop bits);
3. The most recent CPU read of the FIFO was longer than four character periods ago.

The timeout timer is restarted on receipt of a new byte from the RX Shift Register.

聯發機密不得洩漏

RX Holding Register Empty Interrupt: A TX Holding Register Empty Interrupt (IIR[5:0] = 000010b) is generated if ETRBI (IER[1]) is set and either the TX Holding Register or, if FIFOs are enabled, the TX FIFO becomes empty. The interrupt is cleared by writing to the TX Holding Register or TX FIFO if FIFO enabled.

MTK CONFIDENTIAL

Modem Status Change Interrupt: A Modem Status Change Interrupt (IIR[5:0] = 000000b) is generated if EDSSI (IER[3]) is set and either DDCD, TERI, DDSR or DCTS (MSR[3:0]) becomes set. The interrupt is cleared by reading the Modem Status Register.

Software Flow Control Interrupt: A Software Flow Control Interrupt (IIR[5:0] = 010000b) is generated if Software Flow Control is enabled and XOFFI (IER[5]) becomes set, indicating that an XOFF character has been received. The interrupt is cleared by reading the Interrupt Identification Register.

NO DISCLOSURE

Hardware Flow Control Interrupt: A Hardware Flow Control Interrupt (IER[5:0] = 100000b) is generated if Hardware Flow Control is enabled and either RTSI (IER[6]) or CTSI (IER[7]) becomes set indicating that a rising edge has been detected on either the RTS/CTS Modem Control line. The interrupt is cleared by reading the Interrupt Identification Register.

UARTn+0008h FIFO Control Register — UARTn_FCR

Bit	15	14	13	12	11	10	9	8	7	6	5	4	3	2	1	0
Name									RFTL1	RFTL0	TFTL1	TFTL0	DMA1	CLRT	CLRR	FIFOE
Type									WO							

FCR FCR is used to control the trigger levels of the FIFOs, or flush the FIFOs.
FCR[7:6] is modified when LCR != BFh
FCR[5:4] is modified when LCR != BFh & EFR[4] = 1
FCR[4:0] is modified when LCR != BFh

FCR[7:6] RX FIFO trigger threshold

0 1

1 6
2 12
3 **RXTRIG**

MTK Confidential A (機密)

FCR[5:4] TX FIFO trigger threshold
0 1
1 4
2 8
3 14 (FIFOSIZE - 2)

DMA1 This bit determines the DMA mode, which the TXRDY and RXRDY pins support. TXRDY and RXRDY act to support single-byte transfers between the UART and memory (DMA mode 0) or multiple byte transfers (DMA mode1). Note that this bit has no effect unless the FIFOE bit is set as well
0 The device operates in DMA Mode 0.
1 The device operates in DMA Mode 1.
TXRDY – mode0: Goes active (low) when the TX FIFO or the TX Holding Register is empty. Becomes inactive when a byte is written to the Transmit channel.
TXRDY – mode1: Goes active (low) when there are no characters in the TX FIFO. Becomes inactive when the TX FIFO is full.
RXRDY – mode0: Becomes active (low) when at least one character is in the RX FIFO or the RX Buffer Register is full. Becomes inactive when there are no more characters in the RX FIFO or RX Buffer register.
RXRDY – mode1: Becomes active (low) when the RX FIFO Trigger Level is reached or an RX FIFO Character Timeout occurs. Goes inactive when the RX FIFO is empty.

CLRT Clear Transmit FIFO. This bit is self-clearing.
0 Leave TX FIFO intact.
1 Clear all the bytes in the TX FIFO.

CLRR Clear Receive FIFO. This bit is self-clearing.
0 Leave RX FIFO intact.
1 Clear all the bytes in the RX FIFO.

FIFOE FIFO Enabled. This bit must be set to 1 for any of the other bits in the registers to have any effect.
0 Disable both the RX and TX FIFOs.
1 Enable both the RX and TX FIFOs.

IWIT
聯發機密不得洩漏
MTK CONFIDENTIAL
NO DISCLOSURE

UARTn+000Ch Line Control Register — UARTn_LCR

Bit	15	14	13	12	11	10	9	8	7	6	5	4	3	2	1	0
Name									DLAB	SB	SP	EPS	PEN	STB	WLS1	WLS0
Type									R/W							
Reset									0	0	0	0	0	0	0	0

LCR Line Control Register. Determines characteristics of serial communication signals.
Modified when LCR[7] = 0.

DLAB Divisor Latch Access Bit.
0 The RX and TX Registers are read/written at Address 0 and the IER register is read/written at Address 4.
1 The Divisor Latch LS is read/written at Address 0 and the Divisor Latch MS is read/written at Address 4.

SB Set Break
0 No effect
1 SOUT signal is forced into the "0" state.

SP Stick Parity
0 No effect.
1 The Parity bit is forced into a defined state, depending on the states of EPS and PEN:
If EPS=1 & PEN=1, the Parity bit is set and checked = 0.

If EPS=0 & PEN=1, the Parity bit is set and checked = 1.

EPS Even Parity Select

MTK Confidential A (機密)

0 When EPS=0, an odd number of ones is sent and checked.

1 When EPS=1, an even number of ones is sent and checked.

PEN Parity Enable

0 The Parity is neither transmitted nor checked.

1 The Parity is transmitted and checked.

STB Number of STOP bits

0 One STOP bit is always added.

1 Two STOP bits are added after each character is sent; unless the character length is 5 when 1 STOP bit is added.

WLS1, 0 Word Length Select.

0 5 bits

1 6 bits

2 7 bits

3 8 bits

IWIT

UARTn+0010h Modem Control Register — UARTn_MCR

Bit	15	14	13	12	11	10	9	8	7	6	5	4	3	2	1	0
Name									XOFF STATUS	~~IR ENABLE~~	X	LOOP	OUT2	OUT1	RTS	DTR
Type									R/W							
Reset									0	0	0	0	0	0	0	0

聯發機密不得洩漏

MCR Modem Control Register. Control interface signals of the UART.

MCR[4:0] are modified when LCR[7] = 0,

MCR[7:6] are modified when LCR[7] = 0 & EFR[4] = 1.

XOFF Status This is a read-only bit.

0 When an XON character is received.

1 When an XOFF character is received.

MTK CONFIDENTIAL

LOOP Loop-back control bit.

0 No loop-back is enabled.

1 Loop-back mode is enabled.

OUT2 Controls the state of the output NOUT2, even in loop mode.

0 NOUT2=1.

1 NOUT2=0.

NO DISCLOSURE

OUT1 Controls the state of the output NOUT1, even in loop mode.

0 NOUT1=1.

1 NOUT1=0.

RTS Controls the state of the output NRTS, even in loop mode.

0 NRTS=1.

1 NRTS=0.

DTR Control the state of the output NDTR, even in loop mode.

0 NDTR=1.

1 NDTR=0.

IWIT

UARTn+0014h Line Status Register — UARTn_LSR

Bit	15	14	13	12	11	10	9	8	7	6	5	4	3	2	1	0
Name									FIFOERR	TEMT	THRE	BI	FE	PE	OE	DR

Type									R/W							
Reset									0	1	1	0	0	0	0	0

MTK Confidential A (機密)

LSR Line Status Register.

Modified when LCR[7] = 0.

FIFOERR RX FIFO Error Indicator.

- **0** No PE, FE, BI set in the RX FIFO.
- **1** Set to 1 when there is at least one PE, FE or BI in the RX FIFO.

TEMT TX Holding Register (or TX FIFO) and the TX Shift Register are empty.

- **0** Empty conditions below are not met.
- **1** If FIFOs are enabled, the bit is set whenever the TX FIFO and the TX Shift Register are empty. If FIFOs are disabled, the bit is set whenever TX Holding Register and TX Shift Register are empty.

THRE Indicates if there is room for TX Holding Register or TX FIFO is reduced to its Trigger Level.

- **0** **Reset whenever the contents of the TX FIFO are more than its Trigger Level (FIFOs are enabled), or whenever TX Holding Register is not empty(FIFOs are disabled).**
- **1** Set whenever the contents of the TX FIFO are reduced to its Trigger Level (FIFOs are enabled), or whenever TX Holding Register is empty and ready to accept new data (FIFOs are disabled).

BI Break Interrupt.

- **0** Reset by the CPU reading this register
- **1** If the FIFOs are disabled, this bit is set whenever the SIN is held in the 0 state for more than one transmission time (START bit + DATA bits + PARITY + STOP bits).

  If the FIFOs are enabled, this error is associated with a corresponding character in the FIFO and is flagged when this byte is at the top of the FIFO. When a break occurs, only one zero character is loaded into the FIFO: the next character transfer is enabled when SIN goes into the marking state and receives the next valid start bit.

FE Framing Error.

- **0** Reset by the CPU reading this register
- **1** If the FIFOs are disabled, this bit is set if the received data did not have a valid STOP bit. If the FIFOs are enabled, the state of this bit is revealed when the byte it refers to is the next to be read.

PE Parity Error

- **0** Reset by the CPU reading this register
- **1** If the FIFOs are disabled, this bit is set if the received data did not have a valid parity bit. If the FIFOs are enabled, the state of this bit is revealed when the referred byte is the next to be read.

OE Overrun Error.

- **0** Reset by the CPU reading this register.
- **1** If the FIFOs are disabled, this bit is set if the RX Buffer was not read by the CPU before new data from the RX Shift Register overwrote the previous contents.

  If the FIFOs are enabled, an overrun error occurs when the RX FIFO is full and the RX Shift Register becomes full. OE is set as soon as this happens. The character in the Shift Register is then overwritten, but not transferred to the FIFO.

DR Data Ready.

- **0** Cleared by the CPU reading the RX Buffer or by reading all the FIFO bytes.
- **1** Set by the RX Buffer becoming full or by a byte being transferred into the FIFO.

IWIT
嬸發機密不得洩漏
MTK CONFIDENTIAL
NO DISCLOSURE
IWIT

UARTn+0018h Modem Status Register — UARTn_MSR

Bit	15	14	13	12	11	10	9	8	7	6	5	4	3	2	1	0
Name									**DCD**	**RI**	**DSR**	**CTS**	**DDCD**	**TERI**	**DDSR**	**DCTS**
Type									R/W	R/W	R/W	R/W	R/W	R/W	R/W	R/W
Reset									Input	Input	Input	Input	0	0	0	0

Note: After a reset, D4-D7 are inputs. A modem status interrupt can be cleared by writing '0' or set by writing '1' to this register. D0-D3 can be written to.

MTK Confidential A (機密)

Modified when LCR[7] = 0.

MSR Modem Status Register

DCD Data Carry Detect.

When Loop = "0", this value is the complement of the NDCD input signal.

When Loop = "1", this value is equal to the OUT2 bit in the Modem Control Register.

RI Ring Indicator.

When Loop = "0", this value is the complement of the NRI input signal.

When Loop = "1", this value is equal to the OUT1 bit in the Modem Control Register.

DSR Data Set Ready

When Loop = "0", this value is the complement of the NDSR input signal.

When Loop = "1", this value is equal to the DTR bit in the Modem Control Register.

CTS Clear To Send.

When Loop = "0", this value is the complement of the NCTS input signal.

When Loop = "1", this value is equal to the RTS bit in the Modem Control Register.

DDCD Delta Data Carry Detect.

0 The state of DCD has not changed since the Modem Status Register was last read

1 Set if the state of DCD has changed since the Modem Status Register was last read.

TERI Trailing Edge Ring Indicator

0 The NRI input does not change since this register was last read.

1 Set if the NRI input changes from "0" to "1" since this register was last read.

DDSR Delta Data Set Ready

0 Cleared if the state of DSR has not changed since this register was last read.

1 Set if the state of DSR has changed since this register was last read.

DCTS Delta Clear To Send

0 Cleared if the state of CTS has not changed since this register was last read.

1 Set if the state of CTS has changed since this register was last read.

IWIT
聯發機密不得洩漏
MTK CONFIDENTIAL
NO DISCLOSURE

UARTn+001Ch Scratch Register — UARTn_SCR

Bit	15	14	13	12	11	10	9	8	7	6	5	4	3	2	1	0
Name									SCR[7:0]							
Type									R/W							

A general purpose read/write register. After reset, its value is un-defined.

Modified when LCR[7] = 0.

UARTn+0000h Divisor Latch (LS) — UARTn_DLL

Bit	15	14	13	12	11	10	9	8	7	6	5	4	3	2	1	0
Name									DLL[7:0]							
Type									R/W							
Reset									1							

UARTn+0004h Divisor Latch (MS) — UARTn_DLM

Bit	15	14	13	12	11	10	9	8	7	6	5	4	3	2	1	0
Name									DLL[7:0]							
Type									R/W							

Reset									0

Note: DLL & DLM can only be updated if DLAB is set ("1"). Note too that division by 1 generates a BAUD signal that is constantly high.

MTK Confidential A (機密)

Modified when LCR[7] = 1.

The table below shows the divisor needed to generate a given baud rate from CLK inputs of 13, 26 MHz and 52 MHz. The effective clock enable generated is 16 x the required baud rate.

BAUD	13MHz	26MHz	52MHz
110	7386	14773	29545
300	2708	5417	10833
1200	677	1354	2708
2400	338	677	1354
4800	169	339	677
9600	85	169	339
19200	42	85	169
38400	21	42	85
57600	14	28	56
115200	6	14	28

Table 28 Divisor needed to generate a given baud rate

IWIT

UARTn+0008h Enhanced Feature Register UARTn_EFR

機密機密不得洩漏

Bit	15	14	13	12	11	10	9	8	7	6	5	4	3	2	1	0
Name									AUTO CTS	AUTO RTS	D5	ENABLE -E	SW FLOW CONT[3:0]			
Type									R/W	R/W	R/W	R/W	R/W			
Reset									0	0	0	0	0			

*NOTE: Only when LCR=BF'h

MTK CONFIDENTIAL

Auto CTS Enables hardware transmission flow control

- **0** Disabled.
- **1** Enabled.

Auto RTS Enables hardware reception flow control

- **0** Disabled.
- **1** Enabled.

NO DISCLOSURE

Enable-E Enable enhancement features.

- **0** Disabled.
- **1** Enabled.

CONT[3:0] Software flow control bits.

- **00xx** No TX Flow Control
- **10xx** Transmit XON1/XOFF1 as flow control bytes
- **01xx** Transmit XON2/XOFF2 as flow control bytes
- **11xx** Transmit XON1 & XON2 and XOFF1 & XOFF2 as flow control words
- **xx00** No RX Flow Control
- **xx10** Receive XON1/XOFF1 as flow control bytes
- **xx01** Receive XON2/XOFF2 as flow control bytes
- **xx11** Receive XON1 & XON2 and XOFF1 & XOFF2 as flow control words

IWIT

UARTn+0010h XON1 UARTn_XON1

Bit	15	14	13	12	11	10	9	8	7	6	5	4	3	2	1	0
Name									XON1[7:0]							
Type									R/W							
Reset									0							

UARTn+0014h XON2 UARTn_XON2

Bit	15	14	13	12	11	10	9	8	7	6	5	4	3	2	1	0
Name									XON2[7:0]							
Type									R/W							
Reset									0							

UARTn+0018h XOFF1 UARTn_XOFF1

Bit	15	14	13	12	11	10	9	8	7	6	5	4	3	2	1	0
Name									XOFF1[7:0]							
Type									R/W							
Reset									0							

UARTn+001Ch XOFF2 UARTn_XOFF2

Bit	15	14	13	12	11	10	9	8	7	6	5	4	3	2	1	0
Name									XOFF2[7:0]							
Type									R/W							
Reset									0							

*Note: XON1, XON2, XOFF1, XOFF2 are valid only when LCR=BFh.

UARTn+0020h AUTOBAUD_EN UARTn_AUTOBAUD_EN

Bit	15	14	13	12	11	10	9	8	7	6	5	4	3	2	1	0
Name																AUTO_EN
Type																R/W
Reset																0

AUTOBAUD_EN Auto-baud enable signal

- **0** Auto-baud function disable
- **1** Auto-baud function enable

UARTn+0024h HIGH SPEED UART UARTn_HIGHSPEED

Bit	15	14	13	12	11	10	9	8	7	6	5	4	3	2	1	0
Name															SPEED [1:0]	
Type															R/W	
Reset															0	

SPEED UART sample counter base

- **0** based on 16*baud_pulse, baud_rate = system clock frequency/16/{DLH, DLL}
- **1** based on 8*baud_pulse, baud_rate = system clock frequency/8/{DLH, DLL}
- **2** based on 4*baud_pulse, baud_rate = system clock frequency/4/{DLH, DLL}
- **3** based on sampe_count * baud_pulse, baud_rate = system clock frequency / sampe_count

The table below shows the divisor needed to generate a given baud rate from CLK inputs of 13M Hz based on different HIGHSPEED value.

MTK Confidential A (機密)
聯發機密不得洩漏
NO DISCLOSURE

BAUD	HIGHSPEED = 0	HIGHSPEED = 1	HIGHSPEED = 2
110	7386	14773	29545
300	2708	7386	14773
1200	677	2708	7386
2400	338	677	2708
4800	169	338	677
9600	85	169	338
19200	42	85	169
38400	21	42	85
57600	14	21	42
115200	7	14	21
230400	*	7	14
460800	*	*	7
921600	*	*	*

MTK Confidential A (機密)

Table 29 Divisor needed to generate a given baud rate from 13MHz based on different HIGHSPEED value

The table below shows the divisor needed to generate a given baud rate from CLK inputs of 26 MHz based on different HIGHSPEED value.

BAUD	HIGHSPEED = 0	HIGHSPEED = 1	HIGHSPEED = 2
110	14773	29545	59091
300	5417	14773	29545
1200	1354	5417	14773
2400	677	1354	5417
4800	339	677	1354
9600	169	339	667
19200	85	169	339
38400	42	85	169
57600	28	42	85
115200	14	28	42
230400	7	14	28
460800	*	7	14
921600	*	*	7

聯發機密不得洩漏
MTK CONFIDENTIAL
NO DISCLOSURE

Table 30 Divisor needed to generate a given baud rate from 26 MHz based on different HIGHSPEED value

The table below shows the divisor needed to generate a given baud rate from CLK inputs of 52MHz based on different HIGHSPEED value.

BAUD	HIGHSPEED = 0	HIGHSPEED = 1	HIGHSPEED = 2
110	29545	59091	118182
300	10833	29545	59091
1200	2708	10833	29545

2400	1354	2708	10833
4800	677	1354	2708
9600	339	677	1354
19200	169	339	677
38400	85	169	339
57600	56	85	169
115200	28	56	85
230400	14	28	56
460800	7	14	28
921600	*	7	14

MTK Confidential A (機密)

Table 31 Divisor needed to generate a given baud rate from 52 MHz based on different HIGHSPEED value

UARTn+0028h SAMPLE_COUNT

UARTn_SAMPLE_COUNT

Bit	15	14	13	12	11	10	9	8	7	6	5	4	3	2	1	0
Name									SAMPLECOUNT [7:0]							
Type									R/W							
Reset									0							

When HIGHSPEED=3, the sample_count is the threshold value for UART sample counter (sample_num).

Count from 0 to sample_count. For example: If you want to divide by 13, this value should be set to 12.

UARTn+002Ch SAMPLE_POINT

UARTn_SAMPLE_POINT

Bit	15	14	13	12	11	10	9	8	7	6	5	4	3	2	1	0
Name									SAMPLEPOINT [7:0]							
Type									R/W							
Reset									Ffh							

When HIGHSPEED=3, UART gets the input data when sample_count=sample_num.

e.g. system clock = 13MHz, 921600 = 13000000 / 14

sample_count = 14 and sample point = 7 (sample the central point to decrease the inaccuracy)

The SAMPLE_POINT is usually (SAMPLE_COUNT/2).

UARTn+0030h AUTOBAUD_REG

UARTn_AUTOBAUD_REG

Bit	15	14	13	12	11	10	9	8	7	6	5	4	3	2	1	0
Name									BAUD_STAT[3:0]				BAUDRATE[3:0]			
Type									RO				RO			
Reset									0				0			

BAUD_RATE Autobaud baud rate

- **0** 115200
- **1** 57600
- **2** 38400
- **3** 19200
- **4** 9600
- **5** 4800
- **6** 2400

IWIT
聯發機密不得洩漏
MTK CONFIDENTIAL
NO DISCLOSURE
IWIT

MTK Confidential A (機密)

7 1200
8 300
9 110

BAUDSTAT Autobaud format
0 Autobaud is detecting
1 AT_7N1
2 AT_7O1
3 AT_7E1
4 AT_8N1
5 AT_8O1
6 AT_8E1
7 at_7N1
8 at_7E1
9 at_7O1
10 at_8N1
11 at_8E1
12 at_8O1
13 Autobaud detection fails

IWIT

UARTn+0034h Rate Fix Address — UARTn_RATEFIX_AD

Bit	15	14	13	12	11	10	9	8	7	6	5	4	3	2	1	0
Name													RESTRICT	FREQ_SEL	AUTOBAUD_RATE_FIX	RXTE_FIX
Type													R/W	R/W	R/W	R/W
Reset													0	0	0	0

機密

RATE_FIX When you set "rate_fix"(34H[0]), you can transmit and receive data only if 1) the f13m_en is enable and the freq_sel (34H[2]) is set to 1, or
2) the f26m_en is enable and the freq_sel (34H[2]) is set to 0.

MTK CONFIDENTIAL

AUTOBAUD_RATE_FIX When you set "autobaud_rate_fix"(34H[1]), you can tx/rx the autobaud packet only if
1) the f13m_en is enable and the freq_sel (34H[2]) is set to 1, or
2) the f26m_en is enable and the freq_sel (34H[2]) is set to 0.

NO DISCLOSURE

FREQ_SEL
0 Select f26m_en for rate_fix and autobaud_rate_fix
1 Select f13m_en for rate_fix and autobaud_rate_fix

RESTRICT The "restrict" (34H[3]) is used to set a more condition for the autobaud fsm starting point

UARTn+0038h AUTOBAUDSAMPLE — UARTn_AUTOBAUDSAMPLE

Bit	15	14	13	12	11	10	9	8	7	6	5	4	3	2	1	0
Name										AUTOBAUDSAMPLE						
Type										R/W	R/W	R/W	R/W	R/W	R/W	R/W
Reset										dh						

IWIT

Since the system clock may change, autobaud sample duration should change as system clock changes.
When system clock = 13MHz, autobaudsample = 6; when system clock = 26MHz, autobaudsample = 13.

MTK Confidential A (機密)

UARTn+003Ch Guard time added register UARTn_GUARD

Bit	15	14	13	12	11	10	9	8	7	6	5	4	3	2	1	0
Name												GUARD_EN	GUARD_CNT[3:0]			
Type												R/W	R/W	R/W	R/W	R/W
Reset												0	0	0	0	0

GUARD_CNT Guard interval count value. Guard interval = (1/(system clock / div_step / div)) * GUARD_CNT.

GUARD_EN Guard interval add enable signal.

- **0** No guard interval added.
- **1** Add guard interval after stop bit.

UARTn+0040h Escape character register UARTn_ESCAPE_DAT

Bit	15	14	13	12	11	10	9	8	7	6	5	4	3	2	1	0
Name									ESCAPE_DAT[7:0]							
Type									R/W							
Reset									FFh							

ESCAPE_DAT Escape character added before software flow control data and escape character, i.e. if tx data is xon (31h), with esc_en =1, uart transmits data as esc + CEh (~xon).

UARTn+0044h Escape enable register UARTn_ESCAPE_EN

Bit	15	14	13	12	11	10	9	8	7	6	5	4	3	2	1	0
Name																ESC_EN
Type																R/W
Reset																0

ESC_EN Add escape character in transmitter and remove escape character in receiver by UART.

- **0** Do not deal with the escape character.
- **1** Add escape character in transmitter and remove escape character in receiver.

MTK CONFIDENTIAL

UARTn+0048h Sleep enable register UARTn_SLEEP_EN

Bit	15	14	13	12	11	10	9	8	7	6	5	4	3	2	1	0
Name																SELLP_EN
Type																R/W
Reset																0

NO DISCLOSURE

SLEEP_EN For sleep mode issue

- **0** Do not deal with sleep mode indicate signal
- **1** To activate hardware flow control or software control according to software initial setting when chip enters sleep mode. Releasing hardware flow when chip wakes up; but for software control, uart sends xon when awaken and when FIFO does not reach threshold level.

UARTn+004Ch Virtual FIFO enable register UARTn_VFIFO_EN

Bit	15	14	13	12	11	10	9	8	7	6	5	4	3	2	1	0
Name																VFIFO_EN
Type																R/W
Reset																0

VFIFO_EN Virtual FIFO mechanism enable signal.

0 Disable VFIFO mode.

1 Enable VFIFO mode. When virtual mode is enabled, the flow control is based on the DMA threshold, and generates a timeout interrupt for DMA.

MTK Confidential A (機密)

UARTn+0050h Rx Trigger Address — UARTn_RXTRI_AD

Bit	15	14	13	12	11	10	9	8	7	6	5	4	3	2	1	0
Name													RXTRIG[3:0]			
Type													R/W			
Reset													0			

RXTRIG When {rtm,rtl}=2'b11, The Rx FIFO threshold will be Rxtrig.

IWIT

4.10 IrDA Framer

4.10.1 General Description

IrDA framer, which is depicted in **Figure 48**, is implemented to reduce the CPU loading for IrDA transmission. IrDA framer functional block can be divided into two parts: the transmitting part and the receiving part. In the transmitter, it will perform BOFs addition, byte stuffing, the addition of 16-bits FCS, and EOF appendence. In the receiving part, it will execute BOFs removal, ESC character removal, CRC checking, and EOF detection. In addition, the framer will perform 3/16 modulation and demodulation to connect to the IR transceiver. The transmitter and receiver all need DMA channel.

聯發機密不得洩漏

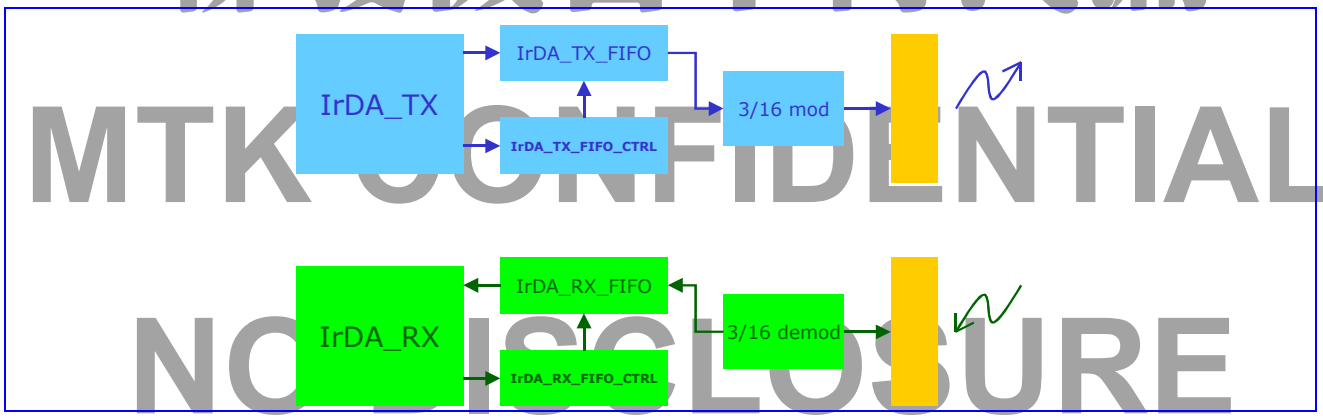

MTK CONFIDENTIAL
NO DISCLOSURE

Figure 48 IrDA framer functional block

4.10.2 Register Definitions

IRDA+0000h TX BUF and RX BUF — BUF

Bit	15	14	13	12	11	10	9	8	7	6	5	4	3	2	1	0
Name												BUF[7:0]				
Type												R/W				
Reset												0				

BUF IrDA Framer transmit or receive data

IWIT

IRDA+0004h TX BUF and RX BUF clear signal — BUF_CLEAR

Bit	15	14	13	12	11	10	9	8	7	6	5	4	3	2	1	0

Name																CLEAR
Type																R/W
Reset																0

CLEAR When CLEAR=1, the FIFO will be cleared

IRDA+0008h Maximum Turn Around Time MAX_T

Bit	15	14	13	12	11	10	9	8	7	6	5	4	3	2	1	0
Name			MAX_T [13:0]													
Type			R/W													
Reset			3E80h													

MAX_T Maximum turn around time is the maximum time that a station can hold the P/F bit. This parameter along with the baud rate parameter dictates the maximum number of bytes that a station can transmit before giving the line to another station by transmitting a frame with the P/F bit. This parameter is used by one station to indicate the maximum time the other station can send before it must turn the link around. 500ms is the only valid value when the baud rate is less than 115200kbps. The default value is 500ms.

IRDA+000Ch Minimum Turn Around Time MIN_T

Bit	15	14	13	12	11	10	9	8	7	6	5	4	3	2	1	0
Name	MIN_T [15:0]															
Type	R/W															
Reset	FDE8h															

MIN_T Minimum turn around time, the default value is 10ms. The minimum turn around time parameter deals with the time needed for a receiver to recover following saturation by transmission from the same device. This parameter corresponds to the required time delay between the last byte of the last frame sent by a station and the point at which it is ready to receive the first byte of a frame from another station, i.e. it is the latency for transmit to complete and be ready for receive.

IRDA+0010h Number of additional BOFs prefixed to the beginning of a frame BOFS

Bit	15	14	13	12	11	10	9	8	7	6	5	4	3	2	1	0
Name									TYPE	BOFS [6:0]						
Type									R/W	R/W						
Reset									0	1011b						

BOFs Additional BOFs number; the additional BOFs parameter indicates the number of additional flags needed at the beginning of every frame. The main purpose of the addition of additional BOFs is to provide a delay at the beginning of each frame for device with long interrupt latency.

TYPE Additional BOFs type

1 BOF = C0h

0 BOF = FFh

IRDA+0014h Baud rate divisor DIV

Bit	15	14	13	12	11	10	9	8	7	6	5	4	3	2	1	0
Name	DIV[15:0]															
Type	R/W															
Reset	55h															

DIV Transmit or receive rate divider. Rate = System clock frequency / DIV/ 16; the default value = ‘h55 when in contention mode.

IWIT
聯發機密 不得洩漏
MTK CONFIDENTIAL
NO DISCLOSURE
IWIT

MTK Confidential A (機密)

IRDA+0018h Transmit frame size — TX_FRAME_SIZE

Bit	15	14	13	12	11	10	9	8	7	6	5	4	3	2	1	0
Name					TX_FRAME_SIZE[11:0]											
Type					R/W											
Reset					40h											

TX_FRAME_SIZE Transmit frame size; the default value = 64 when in contention mode.

IRDA+001Ch Receiving frame1 size — RX_FRAME1_SIZE

Bit	15	14	13	12	11	10	9	8	7	6	5	4	3	2	1	0
Name					RX_FRAME1_SIZE[11:0]											
Type					RO											
Reset					0											

RX_FRAME1_SIZE The actual number of receiving frame1 size.

IRDA+0020h Transmit abort indication — ABORT

Bit	15	14	13	12	11	10	9	8	7	6	5	4	3	2	1	0
Name																ABORT
Type																R/W
Reset																0

ABORT When set 1, the framer will transmit abort sequence and closes the frame without an FCS field or an ending flag.

聯發機密不得洩漏

IRDA+0024h IrDA framer transmit enable signal — TX_EN

Bit	15	14	13	12	11	10	9	8	7	6	5	4	3	2	1	0
Name													TX_ONE	TXINVERT	MODE	TX_EN
Type													R/W	R/W	R/W	R/W
Reset													0	0	0	0

MTK CONFIDENTIAL

TX_EN Transmit enable

MODE Modulation type selection

- **0** 3/16 modulation
- **1** 1.61us

NO DISCLOSURE

TXINVERT Invert transmit signal

- **0** transmit signal is not inverted
- **1** inverts transmit signal

TX_ONE: Control the tranmit enable signal is one hot or not

- **0** tx_en will not be de-asserted until software programs
- **1** tx_en will be de-asserted (i.e. transmit disabled) automatically after one frame has been sent

IRDA+0028h IrDA framer receive enable signal — RX_EN

Bit	15	14	13	12	11	10	9	8	7	6	5	4	3	2	1	0
Name														RX_ONE	RXINVERT	RX_EN
Type														R/W	R/W	R/W
Reset														0	0	0

RX_EN Receive enable

RXINVERT Invert receive signal

0 receive signal is not inverted

1 inverts receive signal

MTK Confidential A (機密)

RX_ONE Disable receive when get one frame

0 rx_en will not be de-asserted until software programs

1 rx_en will be de-asserted (i.e. transmit disabled) automatically after one frame has been sent

IRDA+002Ch FIFO trigger level indication TRIGGER

Bit	15	14	13	12	11	10	9	8	7	6	5	4	3	2	1	0
Name													RX_TRIG[		TX_TRIG	
Type													R/W		R/W	
Reset													0		0	

TX_TRIG The tx FIFO interrupt trigger threshold

00 0 byte

01 1 byte

02 2 byte

RX_TRIG The rx FIFO interrupt trigger threshold

00 1 byte

01 2 byte

02 3 byte

IRDA+0030h IRQ enable signal IRQ_ENABLE

Bit	15	14	13	12	11	10	9	8	7	6	5	4	3	2	1	0
Name				2NDRX_COMP	RXRESTART	THRESHTIMEOUT	FIFOTIMEOUT	TXABORT	RXABORT	MAXTIMEOUT	MINTIMEOUT	RXCOMPLETE	TXCOMPLETE	STATUS	RXTRIG	TXTRIG
Type					R/W	R/W	R/W	R/W	R/W	R/W	R/W	R/W	R/W	R/W	R/W	R/W
Reset					0	0	0	0	0	0	0	0	0	0	0	0

IRQ_ENABLE Interrupt enable signal

0 disable

1 enable

TXTRIG Transmit data reaches the threshold level

0 No interrupt is generated

1 Interrupt is generated when transmit FIFO size reaches threshold

RXTRIG Receive data reaches the threshold level

0 No interrupt is generated

1 Interrupt is generated when receive FIFO size reaches threshold

STATUS Any status lists as following has happened (overrun, size_error)

0 No interrupt is generated

1 Interrupt is generated when one of the statuses occurred

TXCOMPLETE Transmit one frame completely

0 No interrupt is generated

1 Interrupt is generated when transmitting one frame completely

RXCOMPLETE Receive one frame completely

0 No interrupt is generated

1 Interrupt is generated when receiving one frame completely

MINTIMEOUT Minimum time timeout

0 No interrupt is generated

1 Interrupt is generated when minimum timer is timed out

MAXTIMEOUT Maximum time timeout

MTK CONFIDENTIAL
NO DISCLOSURE
IWIT

0 No interrupt is generated

1 Interrupt is generated when maximum timer is timed out

MTK Confidential A (機密)

RXABORT Receiving aborting frame

0 No interrupt is generated

1 Interrupt is generated when receiving aborting frame

TXABORT Transmitting aborting frame

0 No interrupt is generated

1 Interrupt is generated when transmitting aborting frame

FIFOTIMEOUT FIFO timeout

0 No interrupt is generated

1 Interrupt is generated when FIFO timeout

THRESHTIMEOUT Threshold time timeout

0 No interrupt is generated

1 Interrupt is generated when threshold timer is timed out

RXRESTART Receiving a new frame before one frame is received completely

0 No interrupt is generated

1 Interrupt is generated when receiving a new frame before one frame is received completely

2NDRX_COMP Receiving second frame and get P/F bit

0 No interrupt is generated

1 Interrupt is generated when receiving second frame and get P/F bit completely

IRDA+0034h Interrupt Status IRQ_STA

聯發科技股份有限公司 MTK CONFIDENTIAL NO DISCLOSURE

Bit	15	14	13	12	11	10	9	8	7	6	5	4	3	2	1	0
Name				2NDRX_COMP	RXRESTART	THRESHTIMEOUT	FIFOTIMEOUT	TXABORT	RXABORT	MAXTIMEOUT	MINTIMEOUT	RXCOMPLETE	TXCOMPLETE	STATUS	RXFIFO	TXFIFO
Type				RC	RC	RC	RC	RC	RC	RC	RC	RC	RC	RC	RC	RC
Reset				0	0	0	0	0	0	0	0	0	0	0	0	0

TXFIFO Transmit FIFO reaches threshold

RXFIFO Receive FIFO reaches threshold

ERROR generated when one of the statuses occurred

(data_error, PF_detect, fifo_hold1, fifo_empty, crc_fail, frame_error, overrun, size_error)

TXCOMPLETE Transmitting one frame completely

RXCOMPLETE Receiving one frame completely

MINTIMEOUT Minimum turn around time timeout

MAXTIMEOUT Maximum turn around time timeout

RXABORT Receiving aborting frame

TXABORT Transmitting aborting frame

FIFOTIMEOUT FIFO is timeout

THRESHTIMEOUT Threshold time timeout

RXRESTART Receiving a new frame before one frame is received completely

2NDRX_COMP Receiving second frame and get P/F bit completely

IRDA+0038h STATUS register STATUS

Bit	15	14	13	12	11	10	9	8	7	6	5	4	3	2	1	0
Name													FIFOHOLD1	FIFO EMPTY	OVERRUN	RXSIZE
Type													R/W	R/W	R/W	R/W
Reset													0	0	0	0

RXSIZE Receive frame size error

OVERRUN Frame over run
FIFOEMPTY FIFO empty
FIFOHOLD1 FIFO holds one

MTK Confidential A (機密)

IRDA+003Ch Transceiver power on/off control — TRANSCEIVER_PDN

Bit	15	14	13	12	11	10	9	8	7	6	5	4	3	2	1	0
Name																TRANS_PDN
Type																R/W
Reset																1

Transceiver_PDN Power on/off control for external IrDA transceiver

IRDA+0040h Maximum number of receiving frame size — RX_FRAME_MAX

Bit	15	14	13	12	11	10	9	8	7	6	5	4	3	2	1	0
Name					MAX_RX_FRAME_SIZE_											
Type					R/W											
Reset					0											

RX_FRAME_MAX Receive frame max size, when actual receiving frame size is larger than rx_frame_max, RXSIZE is asserted.

IRDA+0044h Threshold Time — THRESH_T

Bit	15	14	13	12	11	10	9	8	7	6	5	4	3	2	1	0
Name	DISCONNECT_TIME[15:0]															
Type	R/W															
Reset	bb8h															

THRESHOLD TIME Threshold time; it's used to control the time a station will wait without receiving valid frame before it disconnects the link. Associated with this is the time a station will wait without receiving valid frames before it will send a status indication to the service user layer.

IRDA+0048h Counter enable signal — COUNT_ENABLE

Bit	15	14	13	12	11	10	9	8	7	6	5	4	3	2	1	0
Name														THRESH_EN	MIN_EN	MAX_EN
Type														R/W	R/W	R/W
Reset														0	0	0

COUNT_ENABLE Counter enable signals

IRDA+004Ch Indication of system clock rate — CLOCK_RATE

Bit	15	14	13	12	11	10	9	8	7	6	5	4	3	2	1	0
Name															CLOCK_RATE	
Type															R/W	
Reset															0	

CLOCK_RATE Indication of the system clock rate

0 26MHz
1 52MHz
2 13MHz

聯發機密不得洩漏
MTK CONFIDENTIAL
NOT TO BE DISCLOSURE

IRDA+0050h System Clock Rate Fix RATE_FIX

MTK Confidential A (機密)

Bit	15	14	13	12	11	10	9	8	7	6	5	4	3	2	1	0
Name																RATE_FIX
Type																R/W
Reset																0

RATE_FIX Fix irda framer sample base clock rate as 13MHz

- **0** clock rate base on clock_rate selection
- **1** 13MHz

IWIT

IRDA+0054h RX Frame1 Status FRAME1_STATUS

Bit	15	14	13	12	11	10	9	8	7	6	5	4	3	2	1	0
Name													UNKNOW_ERROR	PF_DETECT	CRC_FAIL	FRAME_ERROR
Type													R/W	R/W	R/W	R/W
Reset													0	0	0	0

FRAME_ERROR Framing error, i.e. stop bit = 0

- **0** No framing error
- **1** Framing error occurred

CRC_FAIL CRC check fail

- **0** CRC check successfully
- **1** CRC check fail

聯發機密不得洩漏

PF_DETECT P/F bit detect

- **0** No a P/F bit frame
- **1** Detect P/F bit in this frame

UNKNOWN_ERROR Receiving error data i.e. escape character is followed by a character that is not an esc, bof, or eof character.

MTK CONFIDENTIAL

- **0** Data received correctly
- **1** Unknown error occurred

IRDA+0058h RX Frame2 Status FRAME2_STATUS

NO DISCLOSURE

Bit	15	14	13	12	11	10	9	8	7	6	5	4	3	2	1	0
Name													UNKNOW_ERROR	PF_DETECT	CRC_FAIL	FRAME_ERROR
Type													R/W	R/W	R/W	R/W
Reset													0	0	0	0

FRAME_ERROR Framing error, i.e. stop bit = 0

- **0** No framing error
- **1** Framing error occurred

CRC_FAIL CRC check fail

- **0** CRC check successfully
- **1** CRC check fail

IWIT

PF_DETECT P/F bit detect

- **0** No a P/F bit frame
- **1** Detect P/F bit in this frame

UNKNOWN_ERROR Receiving error data i.e. escape character is followed by a character that is not an esc, bof, or eof character.

MTK Confidential A (機密)

- **0** Data receiving correctly
- **1** Unknown error occurred

IRDA+005Ch Receiving frame2 size — RX_FRAME2_SIZE

Bit	15	14	13	12	11	10	9	8	7	6	5	4	3	2	1	0
Name									RX_FRAME2_SIZE[11:0]							
Type									RO							
Reset									0							

RX_FRAME2_SIZE The actual number of receiving frame2 size.

4.11 Real Time Clock

4.11.1 General Description

The Real Time Clock (RTC) module provides time and data information. The clock is based on a 32.768KHz oscillator with an independent power supply. When the mobile handset is powered off, a dedicated regulator supplies the RTC block. If the main battery is not present, a backup supply such as a small mercury cell battery or a large capacitor is used. In addition to providing timing data, an alarm interrupt is generated and can be used to power up the baseband core via the BBWAKEUP pin. Regulator interrupts corresponding to seconds, minutes, hours and days can be generated whenever the time counter value reaches a maximum value (e.g., 59 for seconds and minutes, 23 for hours, etc.). The year span is supported up to 2127. The maximum day-of-month values, which depend on the leap year condition, are stored in the RTC block.

聯發機密不得洩漏

4.11.2 Register Definitions

MTK CONFIDENTIAL

RTC+0000h Baseband power up — RTC_BBPU

Bit	15	14	13	12	11	10	9	8	7	6	5	4	3	2	1	0
Name	KEY_BBPU												AUTO	BBPU	WRITE_EN	PWREN
Type	W												R/W	R/W	R/W	R/W

KEY_BBPU A bus write is acceptable only when KEY_BBPU=0x43.

NO DISCLOSURE

AUTO Controls if BBWAKEUP is automatically in the low state when SYSRST# transitions from high to low.

- **0** BBWAKEUP is not automatically in the low state when SYSRST# transitions from high to low.
- **1** BBWAKEUP is automatically in the low state when SYSRST# transitions from high to low.

BBPU Controls the power of PMIC. If powerkey1=A357h and powerkey2=67D2h, PMIC takes on the value programmed by software; otherwise PMIC is low.

- **0** Power down
- **1** Power on

WRITE_EN When WRITE_EN is set to 0 by the software program, the RTC write interface is disabled until another system power on. This is equivalent to *RTC_debounce_counter_clear_b* signal. In most cases, you should write this bit same as BBPU.

PWREN

- **0** RTC alarm has no action on power switch.
- **1** When an RTC alarm occurs, BBPU is set to 1, and the system powers on by RTC alarm wakeup.

IWIT

RTC+0004h RTC IRQ status RTC_IRQ_STA

MTK Confidential A (機密)

Bit	15	14	13	12	11	10	9	8	7	6	5	4	3	2	1	0
Name															TCSTA	ALSTA
Type															R/C	R/C

ALSTA This register indicates the IRQ status and whether or not the alarm condition has been met.

- **0** No IRQ occurred; the alarm condition has not been met.
- **1** IRQ occurred; the alarm condition has been met.

TCSTA This register indicates the IRQ status and whether or not the tick condition has been met.

- **0** No IRQ occurred; the tick condition has not been met.
- **1** IRQ occurred; the tick condition has been met.

WIT

RTC+0008h RTC IRQ enable RTC_IRQ_EN

Bit	15	14	13	12	11	10	9	8	7	6	5	4	3	2	1	0
Name	WING													ONESHOT	TC_EN	AL_EN
Type	R/O													R/W	R/W	R/W

ONESHOT Controls automatic reset of AL_EN and TC_EN.

AL_EN This register enables the control bit for IRQ generation if the alarm condition has been met.

- **0** Disable IRQ generation.
- **1** Enable the alarm time match interrupt. Clear the interrupt when ONESHOT is high upon generation of the corresponding IRQ.

TC_EN This register enables the control bit for IRQ generation if the tick condition has been met.

- **0** Disable IRQ generation.
- **1** Enable the tick time match interrupt. Clear the interrupt when ONESHOT is high upon generation of the corresponding IRQ.

WING This bit indicates that RTC is still writing to this register.

嚴發機密不得洩漏

MTK CONFIDENTIAL

RTC+000Ch Counter increment IRQ enable RTC_CII_EN

Bit	15	14	13	12	11	10	9	8	7	6	5	4	3	2	1	0
Name	WING						1/8SECCII	1/4SECCII	1/2SECCII	YEACII	MTHCII	DOWCII	DOMCII	HOUCII	MINCII	SECCII
Type	R/O						R/W	R/W	R/W	R/W	R/W	R/W	R/W	R/W	R/W	R/W

This register activates or de-activates the IRQ generation when the TC counter reaches its maximum value.

NO DISCLOSURE

SECCII Set this bit to 1 to activate the IRQ at each second update.

MINCII Set the bit to 1 to activate the IRQ at each minute update.

HOUCII Set the bit to 1 to activate the IRQ at each hour update.

DOMCII Set the bit to 1 to activate the IRQ at each day-of-month update.

DOWCII Set the bit to 1 to activate the IRQ at each day-of-week update.

MTHCII Set the bit to 1 to activate the IRQ at each month update.

YEACII Set the bit to 1 to activate the IRQ at each year update.

1/2SECCII Set the bit to 1 to activate the IRQ at each one-half of a second update.

1/4SECCII Set the bit to 1 to activate the IRQ at each one-fourth of a second update.

1/8SECCII Set the bit to 1 to activate the IRQ at each one-eighth of a second update.

WING This bit indicates RTC is still writing to this register.

WIT

RTC+0010h RTC alarm mask RTC_AL_MASK

Bit	15	14	13	12	11	10	9	8	7	6	5	4	3	2	1	0

Name	WING									YEA_MSK	MTH_MSK	DOW_MSK	DOM_MSK	HOU_MSK	MIN_MSK	SEC_MSK
Type	R/O									R/W	R/W	R/W	R/W	R/W	R/W	R/W

The alarm condition for alarm IRQ generation depends on whether or not the corresponding bit in this register is masked. Warning: If you set all bits 1 in RTC_AL_MASK (i.e. RTC_AL_MASK=0x7f) and PWREN=1 in RTC_BBPU, it means alarm comes EVERY SECOND, not disabled.

SEC_MSK

- **0** Condition (RTC_TC_SEC = RTC_AL_SEC) is checked to generate the alarm signal.
- **1** Condition (RTC_TC_SEC = RTC_AL_SEC) is masked, i.e. the value of RTC_TC_SEC does not affect the alarm IRQ generation.

MIN_MSK

- **0** Condition (RTC_TC_MIN = RTC_AL_MIN) is checked to generate the alarm signal.
- **1** Condition (RTC_TC_MIN = RTC_AL_MIN) is masked, i.e. the value of RTC_TC_MIN does not affect the alarm IRQ generation.

HOU_MSK

- **0** Condition (RTC_TC_HOU = RTC_AL_HOU) is checked to generate the alarm signal.
- **1** Condition (RTC_TC_HOU = RTC_AL_HOU) is masked, i.e. the value of RTC_TC_HOU does not affect the alarm IRQ generation.

DOM_MSK

- **0** Condition (RTC_TC_DOM = RTC_AL_DOM) is checked to generate the alarm signal.
- **1** Condition (RTC_TC_DOM = RTC_AL_DOM) is masked, i.e. the value of RTC_TC_DOM does not affect the alarm IRQ generation.

DOW_MSK

- **0** Condition (RTC_TC_DOW = RTC_AL_DOW) is checked to generate the alarm signal.
- **1** Condition (RTC_TC_DOW = RTC_AL_DOW) is masked, i.e. the value of RTC_TC_DOW does not affect the alarm IRQ generation.

MTH_MSK

- **0** Condition (RTC_TC_MTH = RTC_AL_MTH) is checked to generate the alarm signal.
- **1** Condition (RTC_TC_MTH = RTC_AL_MTH) is masked, i.e. the value of RTC_TC_MTH does not affect the alarm IRQ generation.

YEA_MSK

- **0** Condition (RTC_TC_YEA = RTC_AL_YEA) is checked to generate the alarm signal.
- **1** Condition (RTC_TC_YEA = RTC_AL_YEA) is masked, i.e. the value of RTC_TC_YEA does not affect the alarm IRQ generation.

WING This bit indicates RTC is still writing to this register.

RTC+0014h RTC seconds time counter register RTC_TC_SEC

Bit	15	14	13	12	11	10	9	8	7	6	5	4	3	2	1	0
Name	WING										TC_SECOND					
Type	R/O										R/W					

TC_SECOND The second initial value for the time counter. The range of its value is: 0-59.

WING This bit indicates RTC is still writing to this register.

RTC+0018h RTC minutes time counter register RTC_TC_MIN

Bit	15	14	13	12	11	10	9	8	7	6	5	4	3	2	1	0
Name	WING										TC_MINUTE					
Type	R/O										R/W					

TC_MINUTE The minute initial value for the time counter. The range of its value is: 0-59.

IWIT 聯發機密不得洩漏 MTK CONFIDENTIAL NO DISCLOSURE

WING This bit indicates RTC is still writing to this register.

RTC+001Ch RTC hours time counter register RTC_TC_HOU

MTK CONFIDENTIAL A (機密)

Bit	15	14	13	12	11	10	9	8	7	6	5	4	3	2	1	0
Name	WING											TC_HOUR				
Type	R/O											R/W				

TC_HOUR The hour initial value for the time counter. The range of its value is: 0-23.

WING This bit indicates RTC is still writing to this register.

RTC+0x0020 RTC day-of-month time counter register RTC_TC_DOM

Bit	15	14	13	12	11	10	9	8	7	6	5	4	3	2	1	0
Name	WING											TC_DOM				
Type	R/O											R/W				

TC_DOM The day-of-month initial value for the time counter. The day-of-month maximum value depends on the leap year condition, i.e. 2 LSB of year time counter are zeros.

WING This bit indicates RTC is still writing to this register.

RTC+0x0024 RTC day-of-week time counter register RTC_TC_DOW

Bit	15	14	13	12	11	10	9	8	7	6	5	4	3	2	1	0
Name	WING													TC_DOW		
Type	R/O													R/W		

TC_DOW The day-of-week initial value for the time counter. The range of its value is: 1-7.

WING This bit indicates RTC is still writing to this register.

RTC+0x0028 RTC month time counter register RTC_TC_MTH

Bit	15	14	13	12	11	10	9	8	7	6	5	4	3	2	1	0
Name	WING												TC_MONTH			
Type	R/O												R/W			

TC_MONTH The month initial value for the time counter. The range of its value is: 1-12.

WING This bit indicates RTC is still writing to this register.

RTC+0x002C RTC year time counter register RTC_TC_YEA

Bit	15	14	13	12	11	10	9	8	7	6	5	4	3	2	1	0
Name	WING									AL_SECOND						
Type	R/O									R/W						

TC_YEAR The year initial value for the time counter. The range of its value is: 0-127. (2000-2127)

WING This bit indicates RTC is still writing to this register.

RTC+0x0030 RTC second alarm setting register RTC_AL_SEC

Bit	15	14	13	12	11	10	9	8	7	6	5	4	3	2	1	0
Name	WING										AL_SECOND					
Type	R/O										R/W					

AL_SECOND The second value of the alarm counter setting. The range of its value is: 0-59.

WING This bit indicates RTC is still writing to this register.

RTC+0x0034 RTC minute alarm setting register RTC_AL_MIN

Bit	15	14	13	12	11	10	9	8	7	6	5	4	3	2	1	0
Name	WING											AL_MINUTE				
Type	R/O											R/W				

AL_MINUTE The minute value of the alarm counter setting. The range of its value is: 0-59.

IWIT
聯發機密不得洩漏
MTK CONFIDENTIAL
NO DISCLOSURE

WING This bit indicates RTC is still writing to this register.

RTC+0x0038 RTC hour alarm setting register RTC_AL_HOU

MTK Confidential A (機密)

Bit	15	14	13	12	11	10	9	8	7	6	5	4	3	2	1	0
Name	WING											AL_HOUR				
Type	R/O											R/W				

AL_HOUR The hour value of the alarm counter setting. The range of its value is: 0-23.

WING This bit indicates RTC is still writing to this register.

RTC+0x003C RTC day-of-month alarm setting register RTC_AL_DOM

Bit	15	14	13	12	11	10	9	8	7	6	5	4	3	2	1	0
Name	WING											AL_DOM				
Type	R/O											R/W				

AL_DOM The day-of-month value of the alarm counter setting. The day-of-month maximum value depends on the leap year condition, i.e. 2 LSB of year time counter are zeros.

WING This bit indicates RTC is still writing to this register.

RTC+0x0040 RTC day-of-week alarm setting register RTC_AL_DOW

Bit	15	14	13	12	11	10	9	8	7	6	5	4	3	2	1	0
Name	WING													AL_DOW		
Type	R/O													R/W		

AL_DOW The day-of-week value of the alarm counter setting. The range of its value is: 1-7.

WING This bit indicates RTC is still writing to this register.

RTC+0x0044 RTC month alarm setting register RTC_AL_MTH

Bit	15	14	13	12	11	10	9	8	7	6	5	4	3	2	1	0
Name	WING												AL_MONTH			
Type	R/O												R/W			

AL_MONTH The month value of the alarm counter setting. The range of its value is: 1-12.

WING This bit indicates RTC is still writing to this register.

RTC+0x0048 RTC year alarm setting register RTC_AL_YEA

Bit	15	14	13	12	11	10	9	8	7	6	5	4	3	2	1	0
Name	WING									AL_YEAR						
Type	R/O									R/W						

AL_YEAR The year value of the alarm counter setting. The range of its value is: 0-127. (2000-2127)

WING This bit indicates RTC is still writing to this register.

RTC+0050h RTC_POWERKEY1 register RTC_POWERKEY1

Bit	15	14	13	12	11	10	9	8	7	6	5	4	3	2	1	0
Name	RTC_POWERKEY1															
Type	R/W															

RTC+0054h RTC_POWERKEY2 register RTC_POWERKEY2

Bit	15	14	13	12	11	10	9	8	7	6	5	4	3	2	1	0
Name	RTC_POWERKEY2															
Type	R/W															

IWIT
聯發機密不得洩漏
MTK CONFIDENTIAL
NO DISCLOSURE
IWIT

These register sets are used to determine if the real time clock has been programmed by software; i.e. the time value in real time clock is correct. When the real time clock is first powered on, the register contents are all undefined, therefore the time values shown are incorrect. Software needs to know if the real time clock has been programmed. Hence, these two registers are defined to solve this power-on issue. After software programs the correct value, these two register sets do not need to be updated. In addition to programming the correct time value, when the contents of these register sets are wrong, the interrupt is not generated. Therefore, the real time clock does not generate the interrupts before the software programs the registers; unwanted interrupt due to wrong time value do not occur. The correct values of these two register sets are:

MTK Confidential A (聯發)

RTC_POWERKEY1 A357h
RTC_POWERKEY2 67D2h

IWIT

RTC+0058h PDN1 RTC_PDN1

Bit	15	14	13	12	11	10	9	8	7	6	5	4	3	2	1	0
Name	WING	DBING							RTC_PDN1[7:0]							
Type	R/O	R/O							R/W							

RTC_PDN1[3:1] is for reset de-bounce mechanism.

- **0** 2ms
- **1** 8ms
- **2** 32ms
- **3** 128ms
- **4** 256ms
- **5** 512ms
- **6** 1024ms
- **7** 2048ms

聯發機密不得洩漏

RTC_PDN1[7:4] & RTC_PDN1[0] is the spare register for software to keep power on and power off state information.

DBING This bit indicates RTC is still de-bouncing.
WING This bit indicates RTC is still writing to this register.

MTK CONFIDENTIAL

RTC+005Ch PDN2 RTC_PDN2

Bit	15	14	13	12	11	10	9	8	7	6	5	4	3	2	1	0
Name	WING								RTC_PDN2[7:0]							
Type	R/O								R/W							

NO DISCLOSURE

RTC_PDN2 The spare register for software to keep power on and power off state information.
WING This bit indicates RTC is still writing to this register.

RTC+0060h RTC writing completed flag RTC_WOK

Bit	15	14	13	12	11	10	9	8	7	6	5	4	3	2	1	0
Name														WING3	WING2	WING1
Type														R/O	R/O	R/O

WING1 This bit indicates RTC is still writing POWERKEY1.
WING2 This bit indicates RTC is still writing POWERKEY2.
WING3 This bit indicates RTC is still writing BBPU.

IWIT

RTC+0064h Spare register for specific purpose RTC_SPAR

Bit	15	14	13	12	11	10	9	8	7	6	5	4	3	2	1	0
Name	RTC_SPAR															

Type	R/W

RTC_SPAR These registers are reserved for specific purpose.

MTK Confidential A (機密)

4.12 Auxiliary ADC Unit

The auxiliary ADC unit is used to monitor the status of battery and charger, identify the plugged peripheral, and perform temperature measurement. There provides 7 input channels for diversified application in this unit.

There provides 2 modes of operation: immediate mode and timer-triggered mode. The mode of each channel can be individually selected through register AUXADC_CON0. For example, if the flag SYN0 in the register AUXADC_CON0 is set, the channel 0 will be set in timer-triggered mode. Otherwise, it's in immediate mode.

In immediate mode, the A/D converter will sample the value once only when the flag in the register AUXADC_CON1 has been set. For example, if the flag IMM0 in the register AUXADC_CON1 is set, the A/D converter will sample the data for channel 0. The IMM flags should be cleared and set again to initialize another sampling.

The value sampled for the channel 0 will be stored in register AUXADC_DAT0, the value for the channel 1 will be stored in register AUXADC_DAT1, and vice versa.

If the AUTOSET flag in the register AUXADC_CON3 is set, the auto-sample function is enabled. The A/D converter will sample the data for the channel in which the corresponding data register has been read. For example, in case the SYN1 flag is not set, the AUTOSET flag is set, when the data register AUXADC_DAT0 has been read, the A/D converter will sample the next value for the channel 1 immediately.

If multiple channels are selected at the same time, the task will be performed sequentially on every selected channel. For example, if we set AUXADC_CON1 to be 0x7f, that is, all 7 channels are selected, the state machine in the unit will start sampling from channel 6 to channel 0, and save the values of each input channel in the respective registers. The same process also applies in the timer-triggered mode.

In timer-triggered mode, the A/D converter will sample the value for the channels in which the corresponding SYN flags are set when the TDMA timer counts to the value specified in the register TDMA_AUXEV1, which is placed in the TDMA timer. For example, if we set AUXADC_CON0 to be 0x7f, all 7 channels are selected to be in timer-triggered mode. The state machine will make sampling for all 7 channels sequentially and save the values in registers from AUXADC_DAT0 to AUXADC_DAT6, as it does in immediate mode.

There provides a dedicated timer-triggered scheme for channel 0. The scheme is enabled by setting the SYN7 flag in the register AUXADC_CON2. The timing offset for this event is stored in the register TDMA_AUXEV0 in the TDMA timer. The sampled data triggered by this specific event is stored in the register AUXADC_DAT7. It's used to separate the results of two individual software routines that perform action on the auxiliary ADC unit.

The AUTOCLR*n* in the register AUXADC_CON3 is set when it's intended to sample only once after setting timer-triggered mode. If AUTOCLR1 flag has been set, after the data for the channels in timer-triggered mode has been stored, the SYN*n* flags in the register AUXADC_CON0 will be cleared. Instead, if AUTOCLR0 flag has been set, after the data for the channel 0 has been stored in the register AUXADC_DAT7, the SYN7 flag in the register AUXADC_CON2 will be cleared.

The usage of the immediate mode and timer-triggered mode are mutual exclusive in terms of individual channel.

The PUWAIT_EN bit in the registers AUXADC_CON3 is used to power up the analog port in advance. That ensures that the power has ramped up to the stable state before A/D converter starts the conversion. The analog part will be automatically powered down after the conversion is completed.

聯發機密不得洩漏
MTK CONFIDENTIAL
NO DISCLOSURE

4.12.1 Register Definitions

MTK Confidential A (機密)

AUXADC+0000h **Auxiliary ADC control register 0** **AUXADC_CON0**

Bit	15	14	13	12	11	10	9	8	7	6	5	4	3	2	1	0
Name										SYN6	SYN5	SYN4	SYN3	SYN2	SYN1	SYN0
Type										R/W	R/W	R/W	R/W	R/W	R/W	R/W
Reset										0	0	0	0	0	0	0

SYN*n* Those 7 bits define whether the corresponding channel is to be sampled or not in timer-triggered mode. It's associated with timing offset register TDMA_AUXEV1. It's supported to set multiple flags. The flags can be automatically clearly after those channel have been sampled if AUTOCLR1 in the register AUXADC_CON3 is set.

0 The channel is not selected.

1 The channel is selected.

AUXADC+0004h **Auxiliary ADC control register 1** **AUXADC_CON1**

Bit	15	14	13	12	11	10	9	8	7	6	5	4	3	2	1	0
Name										IMM6	IMM5	IMM4	IMM3	IMM2	IMM1	IMM0
Type										R/W	R/W	R/W	R/W	R/W	R/W	R/W
Reset										0	0	0	0	0	0	0

IMM*n* Those 7 bits are set individually to sample the data for the corresponding channel. It's supported to set multiple flags.

0 The channel is not selected.

1 The channel is selected.

聯發機密不得洩漏

AUXADC+0008h **Auxiliary ADC control register 2** **AUXADC_CON2**

MTK CONFIDENTIAL

Bit	15	14	13	12	11	10	9	8	7	6	5	4	3	2	1	0
Name																SYN7
Type																R/W
Reset																0

SYN7 This bit is used only for channel 0 and to be associated with timing offset register TDMA_AUXEV0 in the TDMA timer in timer-triggered mode. The flag can be automatically clearly after channel 0 have been sampled if AUTOCLR0 in the register AUXADC_CON3 is set.

NO DISCLOSURE

0 The channel is not selected.

1 The channel is selected.

AUXADC+000Ch **Auxiliary ADC control register 3** **AUXADC_CON3**

Bit	15	14	13	12	11	10	9	8	7	6	5	4	3	2	1	0
Name	AUTOSET				PUWAIT_EN		AUTOCLR1	AUTOCLR0								STA
Type	R/W				R/W		R/W	R/W								RO
Reset	0				0		0	0								0

AUTOSET The field defines the auto-sample mode of the module. In auto-sample mode, each channel with its sample register being read can start sampling immediately without configuring the control register AUXADC_CON1 again.

PUWAIT_EN The field enables the power warm-up period to ensure power stability before the SAR process take place. It's recommended to activate.

MTK Confidential A (機密)

0 The mode is not enabled.

1 The mode is enabled.

AUTOCLR1 The field defines the auto-clear mode of the module for event 1. In auto-clear mode, each timer-triggered channel get the samples of the specified channels once after the SYN*n* bit in the register AUXADC_CON0 have been set. The SYN*n* bits will be automatically be cleared and the channel will not being enabled again by the timer event except the SYN*n* flags are set again.

0 The automatic clear mode is not enabled.

1 The automatic clear mode is enabled.

AUTOCLR0 The field defines the auto-clear mode of the module for event 0. In auto-clear mode, the timer-triggered channel 0 get the sample once after the SYN7 bit in the register AUXADC_CON2 have been set. The SYN7 bit will be automatically cleared and the channel will not be enabled again by the timer event 0 except the SYN7 flag is set again.

0 The automatic clear mode is not enabled.

1 The automatic clear mode is enabled.

STA The field defines the state of the module.

0 This module is idle.

1 This module is busy.

AUXADC+0010h Auxiliary ADC channel 0 register AUXADC_DAT0

Bit	15	14	13	12	11	10	9	8	7	6	5	4	3	2	1	0
Name							DAT									
Type							RO									
Reset							0									

The register stores the sampled data for the channel 0. There are 8 registers of the same type for the corresponding channel. The overall register definition is listed in **Table 32**.

Register Address	Register Function	Acronym
AUXADC+0010h	Auxiliary ADC channel 0 data register	AUXADC_DAT0
AUXADC+0014h	Auxiliary ADC channel 1 data register	AUXADC_DAT1
AUXADC+0018h	Auxiliary ADC channel 2 data register	AUXADC_DAT2
AUXADC+001Ch	Auxiliary ADC channel 3 data register	AUXADC_DAT3
AUXADC+0020h	Auxiliary ADC channel 4 data register	AUXADC_DAT4
AUXADC+0024h	Auxiliary ADC channel 5 data register	AUXADC_DAT5
AUXADC+0028h	Auxiliary ADC channel 6 data register	AUXADC_DAT6
AUXADC+002Ch	Auxiliary ADC channel 0 data register for TDMA event 0	AUXADC_DAT7

Table 32 Auxiliary ADC data register list

4.13 I2C / SCCB Controller

4.13.1 General Description

I2C (Inter-IC) /SCCB (Serial Camera Control Bus) is a two-wire serial interface. The two signals are SCL and SDA. SCL is a clock signal that is driven by the master. SDA is a bi-directional data signal that can be driven by either the master or the slave. This generic controller supports the master role and conforms to the I2C specification.

聯發科技機密不得洩漏
MTK CONFIDENTIAL
NO DISCLOSURE
IWIT

4.13.1.1 Feature Support

MTK Confidential A (機密)

I2C compliant master mode operation

Adjustable clock speed for LS/FS mode operation.

7bit/10 bit addressing support.

High Speed mode support.

Slave Clock Extension support.

START/STOP/REPEATED START condition

Manual/DMA Transfer Mode

Multi write per transfer (up to 8 data bytes for non dma mode and 255 data bytes for dma mode)

Multi read per transfer (up to 8 data bytes for non dma mode and 255 data bytes for dma mode)

Multi transfer per transaction (up to 256 write transfers or 256 read transfers with dma mode)

DMA mode with Fifo Flow Control and bus signal holding

Combined format transfer with length change capability.

Active drive / wired-and I/O configuration

4.13.1.2 Manual/DMA Transfer Mode

聯發機密不得洩漏

The controller offers 2 types of transfer mode, Manual and DMA.

When Manual mode is selected, in addition to the slave address register, the controller has a built-in 8byte deep FIFO which allows mcu to prepare up to 8 bytes of data for a write transfer, or read up to 8 bytes of data for a read transfer.

When DMA mode is enabled, the data to and from the FIFO is controlled via DMA transfer and can therefore support up to 255 bytes of consecutive read or write, with the data read from or write to another memory space. When DMA mode is enabled, flow control mechanism is also implemented to hold the bus clk when FIFO underflow or overflow condition is encountered.

MTK CONFIDENTIAL

4.13.1.3 Transfer format support

This controller has been designed to be as generic as possible in order to support a wide range of devices that may utilize different combinations of transfer formats. Here are the transfer format types that can be supported through different software configuration:

NO DISCLOSURE

(Wording convention note:

transfer = anything encapsulated within a Start and Stop or Repeated Start.

transfer length = the number of bytes within the transfer.

transaction = this is the top unit. Everything combined equals 1 transaction.

Transaction length = the number of transfers to be conducted.

)

IWIT

Master to slave dir

Slave to master dir

<u>Single Byte Access</u>

Single Byte Write

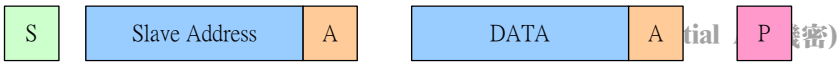

Single Byte Read

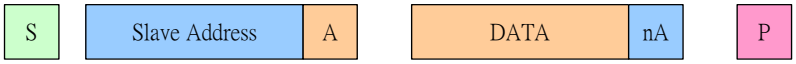

Multi Byte Access

Multi Byte Write

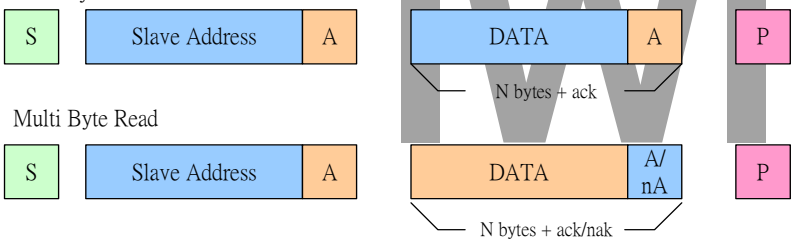

Multi Byte Transfer + Multi Transfer (same direction)

Multi Byte Write + Multi Transfer

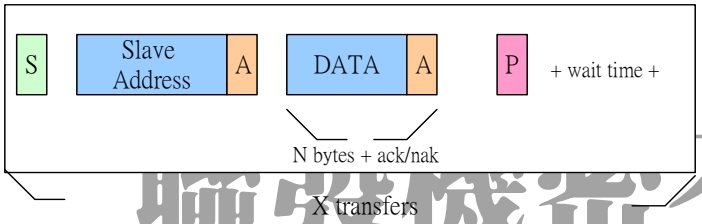

Multi Byte Read + Multi Transfer

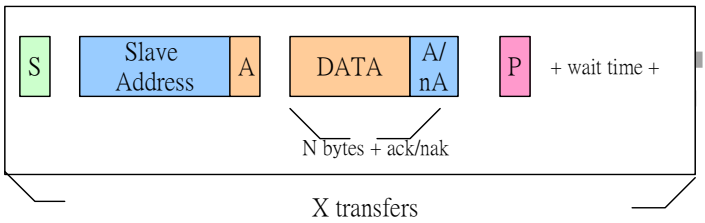

Multi Byte Transfer + Multi Transfer w RS (same direction)

Multi Byte Write + Multi Transfer + Repeated Start

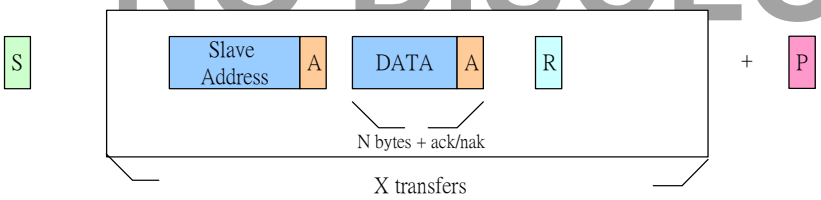

Multi Byte Read + Multi Transfer + Repeated Start

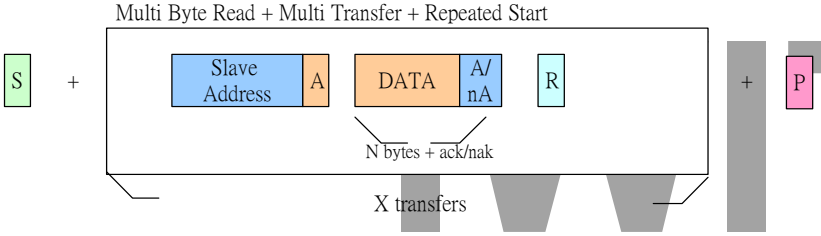

Combined Write/Read with Repeated Start (direction change)

聯發機密不得洩漏
NO DISCLOSURE

(Note: Only supports Write and then Read sequence. Read and then Write is not supported)

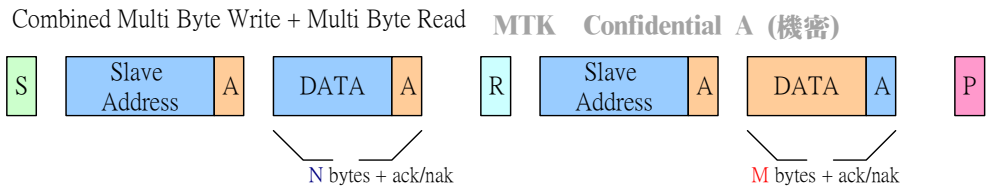

MTK Confidential A (機密)

4.13.2 Programming Examples

Common Transfer Programmable Parameters

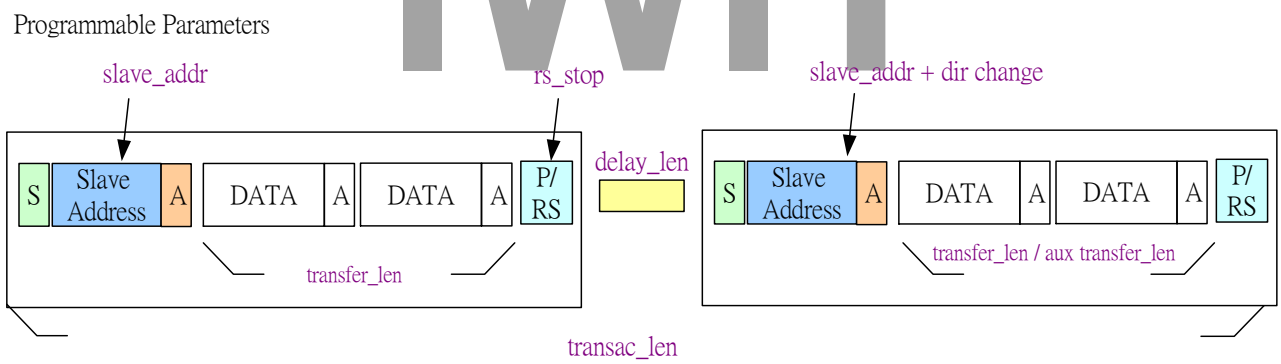

Output Waveform Timing Programmable Parameters

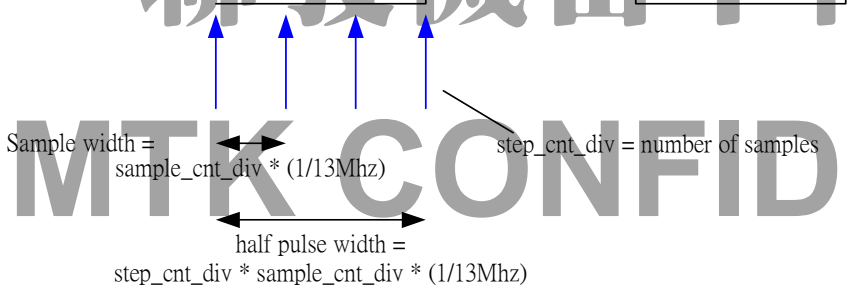

聯發機密不得洩漏
MTK CONFIDENTIAL
NO DISCLOSURE
IWIT
IWIT

4.13.3 Register Definitions

I2CREG+0000h **Data Port Register** **DATA_PORT**

Bit	15	14	13	12	11	10	9	8	7	6	5	4	3	2	1	0
Name									FIFO DATA							
Type									R/W							
Reset									0							

DATA_PORT[7:0] This is the FIFO access port. During master write sequences (slave_addr[0] = 0), this port can be written by APB, and during master read sequences (slave_addr[0] = 1), this port can be read by APB.

(NOTE) Slave_addr must be set correctly before accessing the fifo.

(DEBUG ONLY) If the fifo_apb_debug bit is set, then the FIFO can be read and write by the APB

MTK Confidential A (機密)

I2CREG+0004h Slave Address Register SLAVE_ADDR

Bit	15	14	13	12	11	10	9	8	7	6	5	4	3	2	1	0
Name									SLAVE_ADDR							
Type									R/W							
Reset									0							

SLAVE_ADDR [7:0] This specifies the slave address of the device to be accessed. Bit 0 is defined by the I2C protocol as a bit that indicates the direction of transfer. 1 = master read, 0 = master write.

IWIT

I2CREG+0008h Interrupt Mask Register INTR_MASK

Bit	15	14	13	12	11	10	9	8	7	6	5	4	3	2	1	0
Name													DEBUG	HS_NACKER	ACKERR	TRANSAC_COMP
Type													R.W	R/W	R/W	R/W
Reset													1	1	1	1

This register provides masks for the corresponding interrupt sources as indicated in intr_stat register.

1 = allow interrupt

0 = disable interrupt

Note: while disabled, the corresponding interrupt will not be asserted, however the intr_stat will still be updated with the status. Ie. mask does not affect intr_stat register values.

聯發機密不得洩漏

I2CREG+000Ch Interrupt Status Register INTR_STAT

Bit	15	14	13	12	11	10	9	8	7	6	5	4	3	2	1	0
Name														HS_NACKERR	ACKERR	TRANSAC_COMP
Type														W1C	W1C	W1C
Reset														0	0	0

MTK CONFIDENTIAL

When an interrupt is issued by i2c controller, this register will need to be read by mcu to determine the cause for the interrupt. After this status has been read and appropriate actions are taken, the corresponding interrupt source will need to be write 1 cleared.

NO DISCLOSURE

HS_NACKERR This status is asserted if hs master code nack error detection is enabled. If enabled, hs master code nack err will cause transaction to end and stop will be issued.

ACKERR This status is asserted if ACK error detection is enabled. If enabled, ackerr will cause transaction to end and stop will be issued.

TRANSAC_COMP This status is asserted when a transaction has completed successfully.

IWIT

I2CREG+0010h Control Register CONTROL

Bit	15	14	13	12	11	10	9	8	7	6	5	4	3	2	1	0
Name										TRANSFER_LEN_CHANGE	ACKERR_DET_EN	DIR_CHANGE	CLK_EXTEN	DMA_EN	RS_STOP	

Type										R/W	R/W	RW	RW	RW	RW	R/W
Reset										0	0	0	0	0	0	0

TRANSFER_LEN_CHANGE This options specifies whether or not to change the transfer length after the fist transfer completes. If enabled, the transfers after the first transfer will use the transfer_len_aux parameter.

ACKERR_DET_EN This option enables slave ack error detection. When enabled, if slave ack error is detected, the master shall terminate the transaction by issuing a STOP condition and then asserts ackerr interrupt. Mcu shall handle this case appropriately and then resets the fifo address before reissuing transaction again. If this option is disabled, the controller will ignore slave ack error and keep on scheduled transaction.

0 disable
1 enable

DIR_CHANGE This option is used for combined transfer format, where the direction of transfer is to be changed from write to read after the FIRST RS condition. Note: when set to 1, the transfers after the direction change will be based on the transfer_len_aux parameter.

0 disable
1 enable

CLK_EXT_EN I2C spec allows slaves to hold the SCL line low if it is not yet ready for further processing. Therefore, if this bit is set to 1, master controller will enter a high wait state until the slave releases the SCL line.

DMA_EN By default, this is disabled, and fifo data shall be manually prepared by mcu. This default setting should be used for transfer sizes of less than 8 data bytes and no multiple transfer is configured. When enabled, dma requests are turned on, and the fifo data should be prepared in memory.

RS_STOP In LS/FS mode, this bit affects multi-transfer transaction only. It controls whether or not REPEATED-START condition is used between transfers. The last ending transfer always ends with a STOP.

In HS mode, this bit must be set to 1.

0 use STOP

1 use REPEATED-START

I2CREG+0014h Transfer Length Register (Number of Bytesper Transfer) TRANSFER_LEN

Bit	15	14	13	12	11	10	9	8	7	6	5	4	3	2	1	0
Name				TRANSFER_LEN_AUX					TRANSFER_LEN							
Type				R/W												R/W
Reset				‘h1												‘h1

TRANSFER_LEN_AUX[4:0] This field is valid only when dir_change is set to 1. This indicates the number of DATA BYTES to be transferred in 1 transfer unit (excluding slave address byte) for the transfers following the direction change. I.e., if dir_change =1, then the first write transfer length depends on transfer_len, while the second read transfer length depend on transfer_len_aux. Dir change is always after the first transfer.

(NOTE) The value must be set greater than 1, otherwise no transfer will take place.

TRANSFER_LEN[7:0] This indicates the number of DATA BYTES to be transferred in 1 transfer unit (excluding slave address byte)

MTK Confidential A (機密)
IWIT
聯發科技 不得洩漏
MTK CONFIDENTIAL
NO DISCLOSURE
IWIT

(NOTE) The value must be set greater than 1, otherwise no transfer will take place.

MTK Confidential A (機密)

I2CREG+0018h Transaction Length Register (Number of Transfers per Transaction) TRANSAC_LEN

Bit	15	14	13	12	11	10	9	8	7	6	5	4	3	2	1	0
Name									TRANSAC_LEN							
Type																R/W
Reset																‘h1

TRANSAC_LEN[7:0] This indicates the number of TRANSFERS to be transferred in 1 transaction

(NOTE) The value must be set greater than 1, otherwise no transfer will take place.

IWIT

I2CREG+001Ch Inter Delay Length Register DELAY_LEN

Bit	15	14	13	12	11	10	9	8	7	6	5	4	3	2	1	0
Name									DELAY_LEN							
Type									R/W							
Reset									‘h2							

DELAY_LEN[3:0] This sets the wait delay between consecutive transfers when RS_STOP bit is set to 0. (the unit is same as the half pulse width)

I2CREG+0020h Timing Control Register TIMING

聯發機密不得洩漏

Bit	15	14	13	12	11	10	9	8	7	6	5	4	3	2	1	0
Name	DATA READ ADJ	DATA_READ_TIME				SAMPLE_CNT_DIV					STEP_CNT_DIV					
Type	R/W	R/W				R/W					R/W					
Reset	‘h0	‘h1				‘h3					‘h3					

LS/FS only. This register is used to control the output waveform timing. Each half pulse width (ie. each high or low pulse) is equal to = step_cnt_div * (sample_cnt_div * 1/13Mhz)

MTK CONFIDENTIAL

SAMPLE_CNT_DIV[2:0] Used for LS/FS only. This adjusts the width of each sample. (sample width = sample_cnt_div * 1/13Mhz)

STEP_CNT_DIV[5:0] This specifies the number of samples per half pulse width (ie. each high or low pulse)

DATA_READ_ADJ When set to 1, data latch in sampling time during master reads are adjusted according to DATA_READ_TIME value. Otherwise, by default, data is latched in at half of the high pulse width point. This value must be set to less or equal to half the high pulse width.

NO DISCLOSURE

DATA_READ_TIME[2:0] This value is valid only when DATA_READ_ADJ is set to 1. This can be used to adjust so that data is latched in at earlier sampling points (assuming data is settled by then)

I2CREG+0024h Start Register START

IWIT

Bit	15	14	13	12	11	10	9	8	7	6	5	4	3	2	1	0
Name																START
Type																R/W
Reset																0

START This register starts the transaction on the bus. It is auto deasserted at the end of the transaction.

I2CREG+0030h Fifo Status Register FIFO_STAT

MTK Confidential A (機密)

Bit	15	14	13	12	11	10	9	8	7	6	5	4	3	2	1	0
Name	RD_ADDR				WR_ADDR				FIFO_OFFSET						WR_FULL	RD_EMPTY
Type	RO				RO				RO						RO	RO
Reset	0				0				0				0	0	0	0

RD_ADDR[3:0] The current rd address pointer. (only bit [2:0] has physical meaning)

WR_ADDR[3:0] The current wr address pointer. (only bit [2:0] has physical meaning)

FIFO_OFFSET[3:0] wr_addr[3:0] – rd_addr[3:0]

WR_FULL This indicates that the fifo is full.

RD_EMPTY This indicates that the fifo is empty.

I2CREG+0034h Fifo Thresh Register FIFO_THRESH

Bit	15	14	13	12	11	10	9	8	7	6	5	4	3	2	1	0
Name						TX_TRIG_THRESH								RX_TRIG_THRESH		
Type						RW								R/W		
Reset						'h7								'h0		

DEBUG ONLY. By default, these values do not need to be adjusted. Note! for RX, no timeout mechanism is implemented. Therefore, RX_trig_thresh must be left at 0, or there would be data left in the fifo that is not fetched by DMA controller.

TX_TRIG_THRESH[2:0] When tx fifo level is below this value, tx dma request is asserted.

RX_TRIG_THRESH[2:0] When rx fifo level is above this value, rx dma request is asserted.

I2CREG+0038h Fifo Address Clear Register FIFO_ADDR_CLR

Bit	15	14	13	12	11	10	9	8	7	6	5	4	3	2	1	0
Name																FIFO_ADDR_CR
Type																WO
Reset																0

FIFO_ADDR_CLR When written with a 1'b1, a 1 pulse fifo_addr_clr is generated to clear the fifo address to back to 0.

I2CREG+0040h IO Config Register IO_CONFIG

Bit	15	14	13	12	11	10	9	8	7	6	5	4	3	2	1	0
Name														IO SYNC EN	SDA_IO_CONFIG	SCL_IO_CONFIG
Type														R/W	R/W	R/W
Reset														0	0	0

This register is used to configure the I/O for the sda and scl lines to select between normal i/o mode, or open-drain mode to support wired-and bus.

IO_SYNC_EN DEBUG ONLY: When set to 1, scl and sda inputs will be first dual synced by bclk_ck. This should not be needed. Only reserved for debugging.

IWIT
聯發機密不得洩漏
MTK CONFIDENTIAL
NO DISCLOSURE
IWIT

SDA_IO_CONFIG 0 normal tristate io mode

1 open-drain mode

MTK Confidential A (機密)

SCL_IO_CONFIG 0 normal tristate io mode

1 open-drain mode

I2CREG+0044h RESERVED DEBUG Register DEBUG

Bit	15	14	13	12	11	10	9	8	7	6	5	4	3	2	1	0
Name																
Type														R/W	R/W	R/W
Reset														0	0	0

NOTE: This register is for DEBUG ONLY. The bits are R/W, do not change the values from the default value.

I2CREG+0048h High Speed Mode Register HS

Bit	15	14	13	12	11	10	9	8	7	6	5	4	3	2	1	0
Name		HS_SAMPLE_CNT_DIV				HS_STEP_CNT_DIV				MASTER_CODE					HS_NACKERR_DET_EN	HS_EN
Type		R/W				R/W				R/W					R/W	R/W
Reset		0				1				0					1	0

This register contains options for supporting high speed operation features

Each HS half pulse width (ie. each high or low pulse) is equal to = step_cnt_div * (sample_cnt_div * 1/13Mhz)

HS_SAMPLE_CNT_DIV[2:0] When high speed mode is entered after the master code transfer has been completed, the sample width becomes dependent on this parameter.

HS_STEP_CNT_DIV[2:0] When high speed mode is entered after the master code transfer has been completed, the number of samples per half pulse width becomes dependent on this value.

MASTER_CODE[2:0] This is the 3 bit programmable value for the master code to be transmitted.

HS_NACKERR_DET_EN This enables NACKERR detection during the master code transmission. When enabled, if NACK is not received after master code has been transmitted, the transaction will terminated with a STOP condition.

HS_EN This enables the high speed transaction. (note: rs_stop must be set to 1 as well)

I2CREG+0050h Soft Reset Register SOFTRESET

Bit	15	14	13	12	11	10	9	8	7	6	5	4	3	2	1	0
Name																SOFT_RESET
Type																WO
Reset																0

SOFT_RESET When written with a 1'b1, a 1 pulse soft reset is used as synchronous reset to reset the I2C internal hardware circuits.

IWIT
聯發機密不得洩漏
MTK CONFIDENTIAL
NO DISCLOSURE
IWIT

I2CREG+0064h Debug Status Register DEBUGSTAT

MTK Confidential A (機密)

Bit	15	14	13	12	11	10	9	8	7	6	5	4	3	2	1	0
Name										BUS_BUSY	MASTER_WRITE	MASTER_READ	MASTER_STATE			
Type										RO	RO	RO	RO			
Reset										0	1	0	0			

BUS_BUSY DEBUG ONLY: valid when bus_detect_en is 1. bus_busy = 1 indicates a start transaction has been detected and no stop condition has been detected yet.

MASTER_WRITE DEBUG ONLY: 1 = current transfer is in the master write dir

MASTER_READ DEBUG ONLY: 1 = current transfer is in the master read dir

MASTER_STATE[3:0] DEBUG ONLY: reads back the current master_state.

I2CREG+0068h Debug Control Register DEBUGCTRL

Bit	15	14	13	12	11	10	9	8	7	6	5	4	3	2	1	0
Name															APB_DEBUG_RD	FIFO_APB_DEBUG
Type															WO	R/W
Reset															0	0

APB_DEBUG_RD This bit is only valid when fifo_apb_debug is set to 1. Writing to this register will generate a 1 pulsed fifo apb rd signal for reading the fifo data.

FIFO_APB_DEBUG This is used for trace32 debug purposes. When using trace32, and the memory map is shown, turning this bit on will block the normal apb read access. Apb read access to the fifo is then enabled by writing to apb_debug_rd.

0 disable
1 enable

聯發機密不得洩漏
MTK CONFIDENTIAL
NO DISCLOSURE
IWIT

5 Microcontroller Coprocessors

MTK Confidential A (機密)

Microcontroller Coprocessors are designed to run computing-intensive processes in place of the Microcontroller (MCU). These coprocessors especially target timing critical GSM/GPRS Modem processes that require fast response and large data movement. Controls to the coprocessors are all through memory access via the APB.

5.1 Divider

To ease the processing load of the MCU, a divider is employed. The divider can perform signed and unsigned 32bit/32bit division, as well as modulus. The processing time of the divider is from 1 clock cycle to 33 clock cycles, depending on the magnitude of the dividend. Detailed processing times are listed below in Table 33 錯誤! 找不到參照來源。. Table 33 錯誤! 找不到參照來源。 shows two processing times (except for when the dividend is zero) for each range of dividends, depending on whether or not restoration is required during the last step of the division operation.

Table 33: Processing Time for Different Dividend Values

Signed Division		Unsigned Division	
Dividend	**Clock Cycles**	**Dividend**	**Clock Cycles**
0000_0000h	1	0000_0000h	1
0000_00ffh – (-0000_0100h), excluding 0x0000_0000	8 or 9	0000_0001h – 0000_00ffh	8 or 9
0000_ffffh – (-0001_0000h)	16 or 17	0000_0100h – 0000_ffffh	16 or 17
00ff_ffffh – (-0100_0000h)	24 or 25	0001_0000h – 00ff_ffffh	24 or 25
7fff_ffffh – (-8000_0000h)	32 or 33	0100_0000h – ffff_ffffh	32 or 33

When the divider is started by setting the Divider Control Register START bit to 1, DIV_RDY becomes 0; this bit is asserted when the division process is complete. MCU detects this status bit by polling it to know the correct access timing. To simplify polling, only the value of register DIV_RDY is visible while Divider Control Register is being read. Hence, MCU does not need to mask other bits to extract the value of DIV_RDY.

In a GSM/GPRS system, many divisions are executed with constant divisors. Therefore, oft-used constants are stored in the divider to speed up the process. By controlling control bits IS_CNST and CNST_IDX in Divider Control register, a division can be performed without providing a divisor. This omission of a step saves on the time for writing a divisor in and on the instruction fetch time, thus making the process more efficient.

IWIT 聯發機密不得洩漏 MTK CONFIDENTIAL NO DISCLOSURE

5.1.1 Register Definitions

DIVIDER+0000h **Divider Control Register** **DIV_CON**

Bit	31	30	29	28	27	26	25	24	23	22	21	20	19	18	17	16
Name														CNST_IDX		
Type														WO		
Reset														0		
Bit	15	14	13	12	11	10	9	8	7	6	5	4	3	2	1	0
Name											IN_CNST	SIGN			DIV_RDY	START
Type											WO	WO			RO	WO
Reset											0	1			1	0

START Starts a division operation. Returns to 0 after the division has started.

DIV_RDY Current status of the divider. Note that when DIV_CON register is read, only the value of DIV_RDY appears; the program does not need to mask other parts of the register to extract the information in DIV_RDY.

MTK Confidential A (機密)

0 Division is in progress.

1 Division is finished

SIGN Indicates a signed or unsigned division operation.

0 Unsigned division

1 Signed division

IS_CNST Specifies that an internal constant value should be used as a divisor. If IS_CNST is enabled, the divisor value need not be written, and divider automatically uses the internal constant value instead. The internal constant value used depends on the value of CNST_IDX.

0 Normal division. Divisor is written in via APB.

1 Using internal constant divisor instead.

CNST_IDX Index of constant divisor.

0 divisor = 13

1 divisor = 26

2 divisor = 51

3 divisor = 52

4 divisor = 102

5 divisor = 104

IWIT

DIVIDER +0004h Divider Dividend register DIV_DIVIDEND

聯發機密不得洩漏

Bit	31	30	29	28	27	26	25	24	23	22	21	20	19	18	17	16
Name	DIVIDEND[31:16]															
Type	WO															
Reset	0															
Bit	15	14	13	12	11	10	9	8	7	6	5	4	3	2	1	0
Name	DIVIDEND[15:0]															
Type	WO															
Reset	0															

MTK CONFIDENTIAL

Dividend.

DIVIDER +0008h Divider Divisor register DIV_DIVISOR

NO DISCLOSURE

Bit	31	30	29	28	27	26	25	24	23	22	21	20	19	18	17	16
Name	DIVISOR[31:16]															
Type	WO															
Reset	0															
Bit	15	14	13	12	11	10	9	8	7	6	5	4	3	2	1	0
Name	DIVISOR[15:0]															
Type	WO															
Reset	0															

Divisor.

IWIT

DIVIDER +000Ch Divider Quotient register DIV_QUOTIENT

Bit	31	30	29	28	27	26	25	24	23	22	21	20	19	18	17	16
Name	QUOTIENT[31:16]															
Type	RO															
Reset	0															

Bit	15	14	13	12	11	10	9	8	7	6	5	4	3	2	1	0
Name	QUOTIENT[15:0]															
Type	RO															
Reset	0															

MTK Confidential A (機密)

Quotient.

DIVIDER +0010h **Divider Remainder register** **DIV_REMAINDER**

Bit	31	30	29	28	27	26	25	24	23	22	21	20	19	18	17	16
Name	REMAINDER[31:16]															
Type	RO															
Reset	0															
Bit	15	14	13	12	11	10	9	8	7	6	5	4	3	2	1	0
Name	REMAINDER[15:0]															
Type	RO															
Reset	0															

Remainder.

5.2 CSD Accelerator

5.2.1 General Description

This unit performs the data format conversion of RA0, RA1, and FAX in CSD service. CSD service consists of two major functions: data flow throttling and data format conversion. The data format conversion is a bit-wise operation and requires several instructions to complete a conversion, thus making it inefficient for the MCU to perform itself. A coprocessor, CSD accelerator, is designed to reduce the computing power needed to perform this function.

The CSD accelerator helps in converting data format only; the data flow throttling function is still implemented by the MCU. CSD accelerator performs three types of data format conversion: RA0, RA1, and FAX.

For RA0 conversion, too many case scenarios for the downlink path conversion greatly increase the hardware area cost, thus only uplink RA0 data format conversion is provided. Uplink RA0 conversion consists of inserting a start bit before and a stop bit after each a byte, for a duration of 16 bytes. Figure 49 illustrates the detailed conversion table.

Figure 49: Data Format Conversion of RA0

聯發機密不得洩漏
MTK CONFIDENTIAL
NO DISCLOSURE
IWIT
IWIT

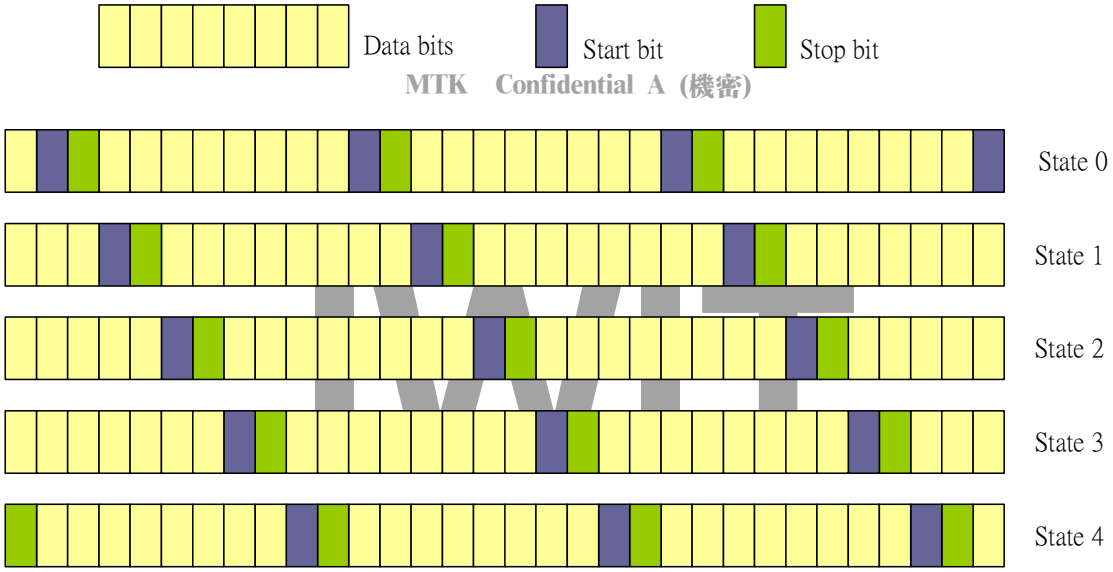

MTK Confidential A (機密)

The RA0 converter processes data state by state. Therefore, before filling in new data, software must ensure that converted data of in a state is withdrawn, otherwise the converted data is replaced by new data. For example, if 32 bits of data are written, the state pointer increments from state 0 to state 1, and word ready of state 0 is asserted. Before writing the next 32-bit data, the word of state 0 must be withdrawn first, or the data is lost when the next conversion is performed.

RA0 records the number of written bytes, the state pointer, and a ready state word. This information helps the software to perform flow control. See Register Definition for more detail.

聯發機密不得洩漏

For RA1 conversion, both downlink and uplink directions are supported. The data formats vary for different data rate. Detailed conversion tables are shown in Figure 50 and Figure 51. The yellow part is the payload data, and the blue part is the status bit.

Figure 50: Data Format Conversion for 6k/12k RA1

MTK CONFIDENTIAL
NO DISCLOSURE

Bit 0 → Bit 6

D1	D2	D3	D4	D5	D6	S1
D7	D8	D9	D10	D11	D12	X
D13	D14	D15	D16	D17	D18	S3
D19	D20	D21	D22	D23	D24	S4
E4	E5	E6	E7	D25	D26	D27
D28	D29	D30	S6	D31	D32	D33
D34	D35	D36	X	D37	D38	D39
D40	D41	D42	S8	D43	D44	D45
D46	D47	D48	S9			

Bit 59

Figure 51: Data Format Conversion for 3.6k RA1

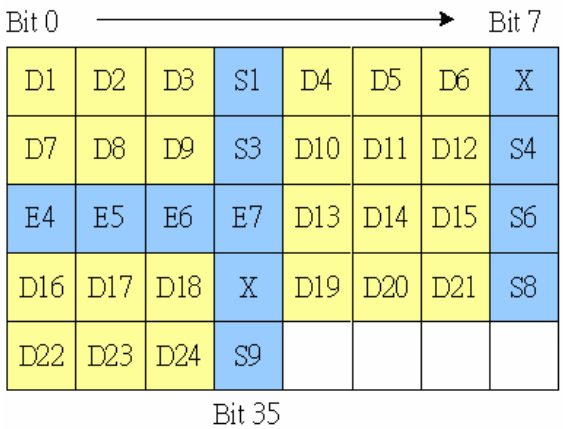

For FAX, two types of bit-reversal functions are provided. Type 1 reversal is a bit-wise reversal (Figure 52), and Type 2 is a byte-wise reversal (Figure 53).

Figure 52: Type 1 Bit Reversal

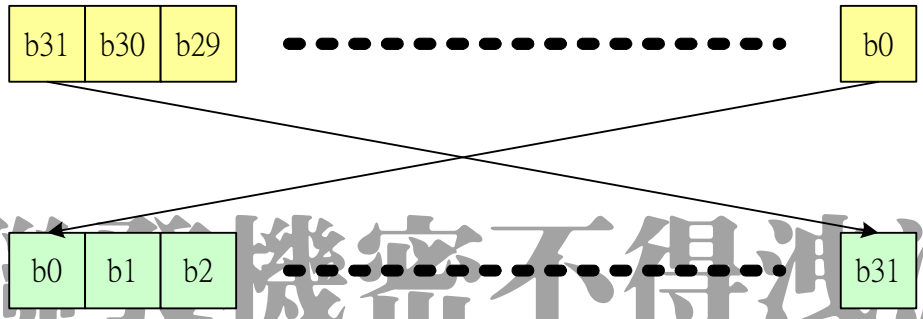

聯發機密不得洩漏

Figure 53: Type 2 Bit Reversal

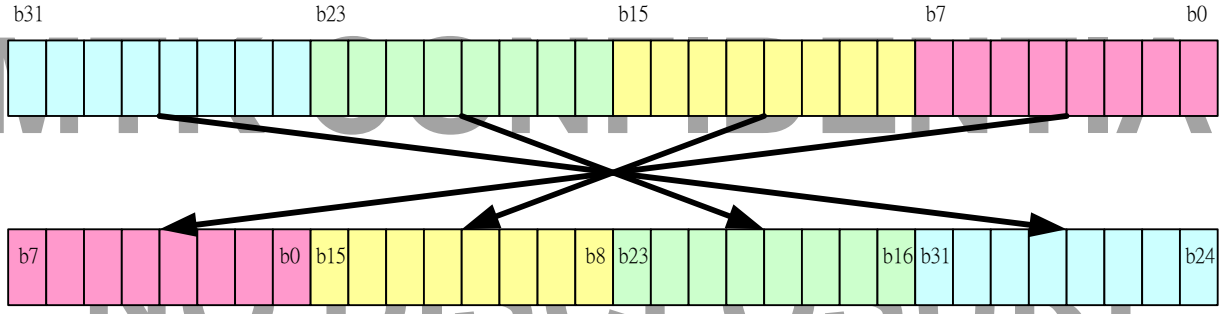

MTK CONFIDENTIAL
NO DISCLOSURE

Table 34: CSD Accelerator Registers

Register Address	Register Function	Acronym
CSD + 0000h	CSD RA0 Control Register	**CSD_RA0_CON**
CSD + 0004h	CSD RA0 Status Register	**CSD_RA0_STA**
CSD + 0008h	CSD RA0 Input Data Register	**CSD_RA0_DI**
CSD + 000Ch	CSD RA0 Output Data Register	**CSD_RA0_DO**
CSD + 0100h	CSD RA1 6K/12K Uplink Input Data Register 0	**CSD_RA1_6K_12K_ULDI0**
CSD + 0104h	CSD RA1 6K/12K Uplink Input Data Register 1	**CSD_RA1_6K_12K_ULDI1**
CSD + 0108h	CSD RA1 6K/12K Uplink Status Data Register	**CSD_RA1_6K_12K_ULSTUS**
CSD + 010Ch	CSD RA1 6K/12K Uplink Output Data Register 0	**CSD_RA1_6K_12K_ULDO0**
CSD + 0110h	CSD RA1 6K/12K Uplink Output Data Register 1	**CSD_RA1_6K_12K_ULDO1**
CSD + 0200h	CSD RA1 6K/12K Downlink Input Data Register 0	**CSD_RA1_6K_12K_DLDI0**

MTK

CSD + 0204h	CSD RA1 6K/12K Downlink Input Data Register 1	**CSD_RA1_6K_12K_DLDI1**
CSD + 0208h	CSD RA1 6K/12K Downlink Output Data Register 0	**CSD_RA1_6K_12K_DLDO0**
CSD + 020Ch	CSD RA1 6K/12K Downlink Output Data Register 1	**CSD_RA1_6K_12K_DLDO1**
CSD + 0210h	CSD RA1 6K/12K Downlink Status Data Register	**CSD_RA1_6K_12K_DLSTUS**
CSD + 0300h	CSD RA13.6K Uplink Input Data Register 0	**CSD_RA1_3P6K_ULDI0**
CSD + 0304h	CSD RA13.6K Uplink Status Data Register	**CSD_RA1_3P6K_ULSTUS**
CSD + 0308h	CSD RA13.6K Uplink Output Data Register 0	**CSD_RA1_3P6K_ULDO0**
CSD + 030Ch	CSD RA13.6K Uplink Output Data Register 1	**CSD_RA1_3P6K_ULDO1**
CSD + 0400h	CSD RA1 3.6K Downlink Input Data Register 0	**CSD_RA1_3P6K_DLDI0**
CSD + 0404h	CSD RA1 3.6K Downlink Input Data Register 1	**CSD_RA1_3P6K_DLDI1**
CSD + 0408h	CSD RA1 3.6K Downlink Output Data Register 0	**CSD_RA1_3P6K_DLDO0**
CSD + 040Ch	CSD RA1 3.6K Downlink Status Data Register	**CSD_RA1_3P6K_DLSTUS**
CSD + 0500h	CSD FAX Bit Reverse Type 1 Input Data Register	**CSD_FAX_BR1_DI**
CSD + 0504h	CSD FAX Bit Reverse Type 1 Output Data Register	**CSD_FAX_BR1_DO**
CSD + 0510h	CSD FAX Bit Reverse Type 2 Input Data Register	**CSD_FAX_BR2_DI**
CSD + 0514h	CSD FAX Bit Reverse Type 2 Output Data Register	**CSD_FAX_BR2_DO**

MTK Confidential A (機密)

5.2.2 Register Definitions

CSD+0000h CSD RA0 Control Register CSD_RA0_CON

聯發科技股份有限公司

Bit	31	30	29	28	27	26	25	24	23	22	21	20	19	18	17	16
Name																
Type																
Reset																
Bit	15	14	13	12	11	10	9	8	7	6	5	4	3	2	1	0
Name											RST	BTS0		VLD_BYTE		
Type											WO	WO		WO		
Reset											0	0		100		

MTK CONFIDENTIAL

VLD_BYTE Specifies the number of valid bytes in the current input data. This value must be specified before filling data.

BTS0 Back to state 0. Forces RA0 converter return back to state 0. Incomplete words are padded with stop bits. For example, consider a back-to-state0 command that is issued after 8 bytes of data are filled in. All bits after the 8th byte are padded with stop bits, and the second ready word byte RDYWD2 is asserted. After removing state word 2, the state pointer goes back to state 0. Note that new data filling should take place after removing state word 2, or the state pointer may be out of order.

NO DISCLOSURE

Figure 54: Example of Back to State 0

IWIT

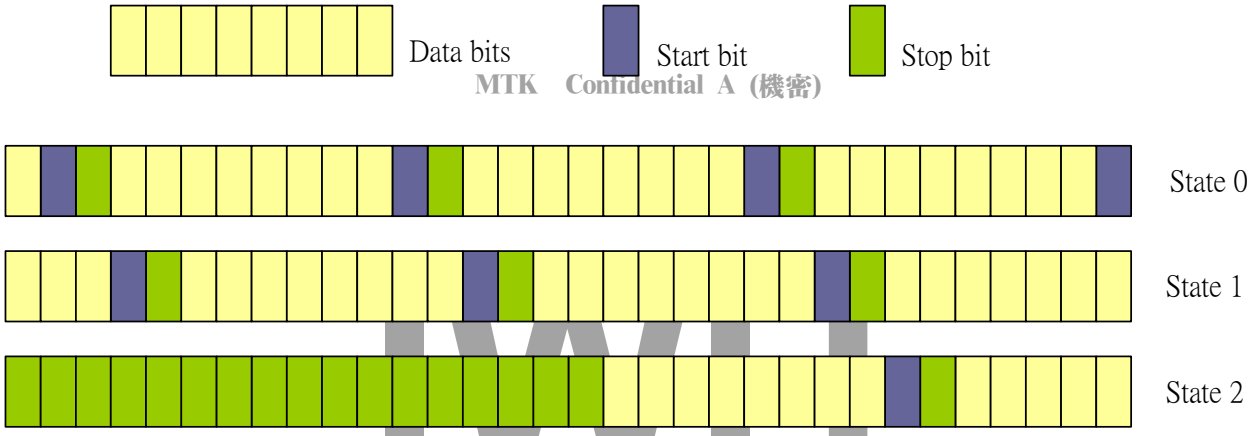

MTK Confidential A (機密)

RST Resets the RA0 converter. If an erroneous operation disorders the data, this bit restores all states to their original state.

CSD+0004h CSD RA0 Status Register CSD_RA0_STA

Bit	31	30	29	28	27	26	25	24	23	22	21	20	19	18	17	16
Name																
Type																
Reset																
Bit	15	14	13	12	11	10	9	8	7	6	5	4	3	2	1	0
Name					BYTECNT				CRTSTA			RDYWD				
Type					RO				RO			RC				
Reset					0				0			0				

RDYWD0~4 Ready words. Indicates which state words are ready for withdrawal. If any bits asserted, data must be withdrawn before new data is filled into CSD_RA0_DI, to avoid data loss.

0 Not ready

1 Ready

CRTSTA Current state. State0 ~ State4. Indicates which state word software is currently filling.

BYTECNT Total number of bytes being filled.

聯發機密不得洩漏
MTK CONFIDENTIAL
NO DISCLOSURE

CSD+0008h CSD RA0 Input Data Register CSD_RA0_DI

Bit	31	30	29	28	27	26	25	24	23	22	21	20	19	18	17	16
Name	DIN															
Type	WO															
Reset	0															
Bit	15	14	13	12	11	10	9	8	7	6	5	4	3	2	1	0
Name	DIN															
Type	WO															
Reset	0															

DIN The RA0 conversion input data. The ready word indicator is checked before filling in data; if any words are ready, they are withdrawn first, otherwise the ready data in RA0 converter is replaced.

CSD+000Ch CSD RA0 Output Data Register CSD_RA0_DO

Bit	31	30	29	28	27	26	25	24	23	22	21	20	19	18	17	16
Name	DOUT															
Type	RO															
Reset	0															
Bit	15	14	13	12	11	10	9	8	7	6	5	4	3	2	1	0
Name	DOUT															
Type	RO															
Reset	0															

IWIT

DOUT RA0 converted data. The return data corresponds to the ready word indicator defined in CSD_RA0_STA register. The five bits of RDYWD map to state0 ~ state 4 respectively. When CSD_RA0_DO is read, the asserted state word is returned. If two state words asserted at the same time, the lower one is returned.

MTK Confidential A (機密)

CSD+0100h CSD RA1 6K/12K Uplink Input Data Register 0

CSD_RA1_6K_12K_ULDI0

Bit	31	30	29	28	27	26	25	24	23	22	21	20	19	18	17	16
Name	DIN															
Type	WO															
Reset	0															
Bit	15	14	13	12	11	10	9	8	7	6	5	4	3	2	1	0
Name	DIN															
Type	WO															
Reset	0															

DIN D1 to D32 of the RA1 uplink data.

CSD+0104h CSD RA1 6K/12K Uplink Input Data Register 1

CSD_RA1_6K_12K_ULDI1

Bit	31	30	29	28	27	26	25	24	23	22	21	20	19	18	17	16
Name																
Type																
Reset																
Bit	15	14	13	12	11	10	9	8	7	6	5	4	3	2	1	0
Name	DIN															
Type	WO															
Reset	0															

DIN D33 to D48 of the RA1 uplink data.

CSD+0108h CSD RA1 6K/12K Uplink Status Data Register

CSD_RA1_6K_12K_ULSTUS

Bit	31	30	29	28	27	26	25	24	23	22	21	20	19	18	17	16
Name																
Type																
Reset																
Bit	15	14	13	12	11	10	9	8	7	6	5	4	3	2	1	0
Name										E7	E6	E5	E4	X	SB	SA
Type										WO	WO	WO	WO	WO	WO	WO
Reset										0	0	0	0	0	0	0

SA Represents S1, S3, S6, and S8 of the status bits.

SB Represents S4 and S9 of the status bits.

X Represents X of the status bits.

E4 Represents E4 of the status bits.

E5 Represents E5 of the status bits.

E6 Represents E6 of the status bits.

E7 Represents E7 of the status bits.

CSD+010Ch CSD RA1 6K/12K Uplink Output Data Register 0

CSD_RA1_6K_12K_ULDO0

Bit	31	30	29	28	27	26	25	24	23	22	21	20	19	18	17	16
Name	DOUT															
Type	RO															
Reset	0															
Bit	15	14	13	12	11	10	9	8	7	6	5	4	3	2	1	0

IWIT
聯發機密不得洩漏
MTK CONFIDENTIAL
NO DISCLOSURE
IWIT

Name	DOU
Type	RO
Reset	0

MTK Confidential A (機密)

DOUT Bit 0 to bit 31 of the RA1 6K/12K uplink frame.

CSD+0110h CSD RA1 6K/12K Uplink Output Data Register 1

CSD_RA1_6K_12K_ULDO1

Bit	31	30	29	28	27	26	25	24	23	22	21	20	19	18	17	16
Name										DOUT						
Type										RO						
Reset										0						
Bit	15	14	13	12	11	10	9	8	7	6	5	4	3	2	1	0
Name	DOUT															
Type	RO															
Reset	0															

DOUT Bit 32 to bit 59 of the RA1 6K/12K uplink frame.

CSD+0200h CSD RA1 6K/12K Downlink Input Data Register 0

CSD_RA1_6K_12K_DLDI0

Bit	31	30	29	28	27	26	25	24	23	22	21	20	19	18	17	16
Name	DIN															
Type	WO															
Reset	0															
Bit	15	14	13	12	11	10	9	8	7	6	5	4	3	2	1	0
Name	DIN															
Type	WO															
Reset	0															

DIN Bit 0 to bit 31 of the RA1 6K/12K downlink frame.

CSD+0204h CSD RA1 6K/12K Downlink Input Data Register 1

CSD_RA1_6K_12K_DLDI1

Bit	31	30	29	28	27	26	25	24	23	22	21	20	19	18	17	16
Name					DIN											
Type					WO											
Reset					0											
Bit	15	14	13	12	11	10	9	8	7	6	5	4	3	2	1	0
Name	DIN															
Type	WO															
Reset	0															

DIN Bit 32 to bit 59 of the RA1 6K/12K downlink frame.

CSD+0208h CSD RA1 6K/12K Downlink Output Data Register 0

CSD_RA1_6K_12K_DLDO0

Bit	31	30	29	28	27	26	25	24	23	22	21	20	19	18	17	16
Name	DOUT															
Type	RO															
Reset	0															
Bit	15	14	13	12	11	10	9	8	7	6	5	4	3	2	1	0
Name	DOUT															
Type	RO															
Reset	0															

DOUT D1 to D32 of the RA1 downlink data.

聯發機密不得洩漏
MTK CONFIDENTIAL
NO DISCLOSURE
IWIT

MTK Confidential A (機密)

CSD+020Ch CSD RA1 6K/12K Downlink Output Data Register 1

CSD_RA1_6K_12K_DLDO1

Bit	31	30	29	28	27	26	25	24	23	22	21	20	19	18	17	16
Name																
Type																
Reset																
Bit	15	14	13	12	11	10	9	8	7	6	5	4	3	2	1	0
Name	DOUT															
Type	RO															
Reset	0															

DOUT D33 to D48 of the RA1 downlink data.

CSD+0210h CSD RA1 6K/12K Downlink Status Data Register

CSD_RA1_6K_12K_DLSTUS

Bit	31	30	29	28	27	26	25	24	23	22	21	20	19	18	17	16
Name																
Type																
Reset																
Bit	15	14	13	12	11	10	9	8	7	6	5	4	3	2	1	0
Name										E7	E6	E5	E4	X	SB	SA
Type										RO	RO	RO	RO	RO	RO	RO
Reset										0	0	0	0	0	0	0

SA The majority vote of the S1, S3, S6 and S8 status bits. If the vote is split, SA=0.

SB The majority vote of the S4 and S9 status bits. If the vote is split, SB=0.

X The majority vote of the two X bits in downlink frame. If the vote is split, X=0.

E4 Represents E4 of the status bits.

E5 Represents E5 of the status bits.

E6 Represents E6 of the status bits.

E7 Represents E7 of the status bits.

聯發機密不得洩漏
MTK CONFIDENTIAL
NO DISCLOSURE

CSD+0300h CSD RA1 3.6K Uplink Input Data Register 0

CSD_RA1_3P6K_ULDI0

Bit	31	30	29	28	27	26	25	24	23	22	21	20	19	18	17	16
Name									DIN							
Type									WO							
Reset									0							
Bit	15	14	13	12	11	10	9	8	7	6	5	4	3	2	1	0
Name	DIN															
Type	WO															
Reset	0															

DIN D1 to D24 of the RA1 3.6K uplink data.

CSD+0304h CSD RA1 3.6K Uplink Status Data Register

CSD_RA1_3P6K_ULSTUS

Bit	31	30	29	28	27	26	25	24	23	22	21	20	19	18	17	16
Name																
Type																
Reset																
Bit	15	14	13	12	11	10	9	8	7	6	5	4	3	2	1	0
Name										E7	E6	E5	E4	X	SB	SA
Type										WO	WO	WO	WO	WO	WO	WO
Reset										0	0	0	0	0	0	0

SA Represents S1, S3, S6, and S8 of the status bits.

SB Represents S4 and S9 of the status bits.

X Represents X of the status bits.

MTK Confidential A (機密)

E4 Represents E4 of the status bits.

E5 Represents E5 of the status bits.

E6 Represents E6 of the status bits.

E7 Represents E7 of the status bits.

CSD+0308h CSD RA1 3.6K Uplink Output Data Register 0

CSD_RA1_3P6K_ULDO0

Bit	31	30	29	28	27	26	25	24	23	22	21	20	19	18	17	16
Name	DOUT															
Type	RO															
Reset	0															
Bit	15	14	13	12	11	10	9	8	7	6	5	4	3	2	1	0
Name	DOUT															
Type	RO															
Reset	0															

DOUT Bit 0 to bit 31 of the RA1 3.6K uplink frame.

CSD+030Ch CSD RA1 3.6K Uplink Output Data Register 1

CSD_RA1_3P6K_ULDO1

Bit	31	30	29	28	27	26	25	24	23	22	21	20	19	18	17	16
Name																
Type																
Reset																
Bit	15	14	13	12	11	10	9	8	7	6	5	4	3	2	1	0
Name													DOUT			
Type													RO			
Reset													0			

DOUT Bit 32 to bit 35 of the RA1 3.6K uplink frame.

MTK CONFIDENTIAL

CSD+0400h CSD RA1 3.6K Downlink Input Data Register 0

CSD_RA1_3P6K_DLDI0

Bit	31	30	29	28	27	26	25	24	23	22	21	20	19	18	17	16
Name	DIN															
Type	WO															
Reset	0															
Bit	15	14	13	12	11	10	9	8	7	6	5	4	3	2	1	0
Name	DIN															
Type	WO															
Reset	0															

NO DISCLOSURE

DIN Bit 0 to bit 31 of the RA1 3.6K downlink frame.

CSD+0404h CSD RA1 3.6K Downlink Input Data Register 1

CSD_RA1_3P6K_DLDI1

Bit	31	30	29	28	27	26	25	24	23	22	21	20	19	18	17	16
Name																
Type																
Reset																
Bit	15	14	13	12	11	10	9	8	7	6	5	4	3	2	1	0
Name													DIN			
Type													WO			
Reset													0			

DIN Bit 32 to bit 35 of the RA1 3.6K downlink frame.

MTK Confidential A (機密)

CSD+0408h CSD RA1 3.6K Downlink Output Data Register 0

CSD_RA1_3P6K_DLDO0

Bit	31	30	29	28	27	26	25	24	23	22	21	20	19	18	17	16
Name									DOUT							
Type									RO							
Reset									0							
Bit	15	14	13	12	11	10	9	8	7	6	5	4	3	2	1	0
Name	DOUT															
Type	RP															
Reset	0															

DIN D1 to D24 of the RA1 3.6K downlink data.

CSD+040Ch CSD RA1 3.6K Downlink Status Data Register

CSD_RA1_3P6K_DLSTUS

Bit	31	30	29	28	27	26	25	24	23	22	21	20	19	18	17	16
Name																
Type																
Reset																
Bit	15	14	13	12	11	10	9	8	7	6	5	4	3	2	1	0
Name										E7	E6	E5	E4	X	SB	SA
Type										RO	RO	RO	RO	RO	RO	RO
Reset										0	0	0	0	0	0	0

SA The majority vote of the S1, S3, S6 and S8 status bits. If the vote is split, SA=0.

SB The majority vote of the S4 and S9 status bits. If the vote is split, SB=0.

X The majority vote of the two X bits in downlink frame. If the vote is split, X=0.

E4 Represents E4 of status bits.

E5 Represents E5 of status bits.

E6 Represents E6 of status bits.

E7 Represents E7 of status bits.

聯發機密不得洩漏
MTK CONFIDENTIAL
NO DISCLOSURE

CSD+0500h CSD FAX Bit Reverse Type 1 Input Data Register

CSD_FAX_BR1_DI

Bit	31	30	29	28	27	26	25	24	23	22	21	20	19	18	17	16
Name	DIN															
Type	WO															
Reset	0															
Bit	15	14	13	12	11	10	9	8	7	6	5	4	3	2	1	0
Name	DIN															
Type	WO															
Reset	0															

DIN 32-bit input data for a Type 1 bit reversal of the FAX data. A Type 1 bit reversal reverses the data bit by bit.

CSD+0504h CSD FAX Bit Reverse Type 1 Output Data Register

CSD_FAX_BR1_DO

Bit	31	30	29	28	27	26	25	24	23	22	21	20	19	18	17	16
Name	DOUT															
Type	RO															
Reset	0															
Bit	15	14	13	12	11	10	9	8	7	6	5	4	3	2	1	0
Name	DOUT															
Type	RO															

Reset	0

DOUT 32-bit result data for a Type 1 bit reversal of the FAX data.

MTK Confidential A (機密)

CSD+0510h CSD FAX Bit Reverse Type 2 Input Data Register CSD_FAX_BR2_DI

Bit	31	30	29	28	27	26	25	24	23	22	21	20	19	18	17	16
Name	DIN															
Type	WO															
Reset	0															
Bit	15	14	13	12	11	10	9	8	7	6	5	4	3	2	1	0
Name	DIN															
Type	WO															
Reset	0															

DIN 32-bit input data for a Type 2 bit reversal of the FAX data. A Type 2 bit reversal reverses the data byte by byte.

CSD+0514h CSD FAX Bit Reverse Type 2 Output Data Register CSD_FAX_BR2_DO

Bit	31	30	29	28	27	26	25	24	23	22	21	20	19	18	17	16
Name	DOUT															
Type	RO															
Reset	0															
Bit	15	14	13	12	11	10	9	8	7	6	5	4	3	2	1	0
Name	DOUT															
Type	RO															
Reset	0															

DOUT 32-bit result data for a Type 2 bit reversal of the FAX data.

聯發機密不得洩漏
MTK CONFIDENTIAL
NO DISCLOSURE
IWIT

5.3 FCS Codec

5.3.1 General Description

The Frame Check Sequence (FCS) serves to detect errors in the following information bits:

- **RLP-frame of CSD services in GSM**: The frame length is fixed at 240 or 576 bits including the 24-bit FCS field.
- **LLC-frame of GPRS service**: The frame length is determined by the information field, and length of the FCS field is 24 bits.

Generation of the FCS is very similar to CRC coding in baseband signal processing. ETSI GSM specifications 04.22 and 04.64 both define the coding rules as:

1. The CRC is the one's complement of the modulo-2 sum of the following additives:
   - the remainder of $x^k \cdot (x^{23} + x^{22} + x^{21} + \ldots + x^2 + x + 1)$ modulo-2 divided by the generator polynomial, where k is the number of bits of the dividend (i.e. fill the shift registers with all ones initially before feeding data); and,
   - the remainder of the modulo-2 division by the generator polynomial of the product of x^{24} by the dividend, which are the information bits.
2. The CRC-24 generator polynomial is:
   $G(x) = x^{24} + x^{23} + x^{21} + x^{20} + x^{19} + x^{17} + x^{16} + x^{15} + x^{13} + x^8 + x^7 + x^5 + x^4 + x^2 + 1$

3. The 24-bit CRC is appended to the data bits in the MSB-first manner.

4. Decoding is identical to encoding except that data fed into the syndrome circuit is 24 bits longer than the information bits at encoding. The dividend is also multiplied by x^{24}. If no error occurs, the remainder satisfies: $R(x) = x^{22} + x^{21} + x^{19} + x^{18} + x^{16} + x^{15} + x^{11} + x^{8} + x^{5} + x^{4}$ (0x6d8930)
   And the parity output word is 0x9276cf.

In contrast to conventional CRC, this special coding scheme makes the encoder identical to the decoder and simplifies the hardware design.

MTK Confidential A (機密)

5.3.2 Register Definitions

FCS+0000h FCS input data register FCS_DATA

Bit	15	14	13	12	11	10	9	8	7	6	5	4	3	2	1	0
Name	D15	D14	D13	D12	D11	D10	D9	D8	D7	D6	D5	D4	D3	D2	D1	D0
Type	WO	WO	WO	WO	WO	WO	WO	WO	WO	WO	WO	WO	WO	WO	WO	WO

The data bits input. First write of this register is the starting point of the encode or decode process.

D0~15 The input format is $D15 \cdot x^{n} + D14 \cdot x^{n-1} + D13 \cdot x^{n-2} + \ldots + Dk \cdot x^{k} + \ldots$, thus D15 is the first bit pushed into the shift register. If the last data word is less than 16 bits, the remaining bits are neglected.

FCS+0004h Input data length indication register FCS_DLEN

Bit	15	14	13	12	11	10	9	8	7	6	5	4	3	2	1	0
Name	LEN															
Type	WO															

The MCU specifies the total data length (in bits) to be encoded or decoded.

LEN Data length. The length must be a multiple of 8 bits.

聯發機密不得洩漏

FCS+0x0008h FCS parity output register 1, MSB part FCS_PAR1

Bit	15	14	13	12	11	10	9	8	7	6	5	4	3	2	1	0
Name	P15	P14	P13	P12	P11	P10	P9	P8	P7	P6	P5	P4	P3	P2	P1	P0
Type	RC	RC	RC	RC	RC	RC	RC	RC	RC	RC	RC	RC	RC	RC	RC	RC
Reset	0	0	0	0	0	0	0	0	0	0	0	0	0	0	0	0

MTK CONFIDENTIAL

FCS+000Ch FCS parity output register 2, LSB part FCS_PAR2

Bit	15	14	13	12	11	10	9	8	7	6	5	4	3	2	1	0
Name									P23	P22	P21	P20	P19	P18	P17	P16
Type									RC	RC	RC	RC	RC	RC	RC	RC
Reset									0	0	0	0	0	0	0	0

NO DISCLOSURE

Parity bits output. For FCS_PAR2, bit 8 to bit 15 are filled with zeros when reading.

P0~23 The output format is $P23 \cdot D^{23} + P22 \cdot D^{22} + P21 \cdot D^{21} + \ldots + Pk \cdot D^{k} + \ldots + P1 \cdot D^{1} + P0$, thus P23 is the first bit being popped out from the shift register and the first appended to the information bits. In other words, {FCS_PAR2[7:0], FCS_PAR1[15:8], FCS_PAR1[7:0] } is the order of the parity bits appended to the data.

FCS+0010h FCS codec status register FCS_STAT

Bit	15	14	13	12	11	10	9	8	7	6	5	4	3	2	1	0
Name														BUSY	FER	RDY
Type														RC	RC	RC
Reset														0	1	0

BUSY Indicates whether or not the current data work is available for writing. The codec works in a serial manner and the data word is input in a parallel manner. BUSY=1 indicates that the current data word is being

processed and a write to FCS_DATA is invalid: the operation is permitted but the data may not be consistent. BUSY=0 allows a write of FCS_DATA during an encoding or decoding process.

MTK Confidential A (機密)

FER Frame error indication, for decode mode only. FER=0 means no error has occurred; FER=1 indicates the parity check has failed. Writing to FCS_RST.RST or the first write to FCS_DATA resets this bit to 0.

RDY When RDY=1, verify that the encode or decode process has been finished. For an encode, the parity data in FCS_PAR1 and FCS_PAR2 are available and consistent. For a decode, FCS_STAT.FER indication is valid. A write of FCS_RST.RST or the first write of FCS_DATA resets this bit to 0.

FCS+0014h FCS codec reset register FCS_RST

Bit	15	14	13	12	11	10	9	8	7	6	5	4	3	2	1	0
Name													EN_DE	PAR	BIT	RST
Type													WO	WO	WO	WO

RST RST=0 resets the CRC coprocessor. Before setup of the FCS codec, the MCU needs to set RST=0 to flush the shift register content before encode or decode.

BIT BIT=0 signifies not to invert the bit order in a data word byte when the codec is running. BIT=1 signifies to reverse the bit order in a byte written in FCS_DATA.

PAR PAR=0 means not to invert the bit order in a byte of parity words when the codec is running, including reading FCS_PAR1 and FCS_PAR2. PAR=1 means the bit order of the parity words should be reversed, in encoding or decoding .

EN_DE EN_DE=0 indicates an encode operation; EN_DE=1 indicates a decode operation.

聯發機密不得洩漏

MTK CONFIDENTIAL

NO DISCLOSURE

IWIT

6 Multi-Media Subsystem

MTK Confidential A (機密)

MT6225 is specially designed to support multi-media terminals. It integrates several hardware based accelerators, like advanced LCD display controller and hardware Image Resizer. Besides, MT6225 also incorporates NAND Flash, USB 1.1 Device and SD/MMC/MS/MS Pro Controllers for massive data transfers and storages. This chapter describes those functional blocks in detail.

6.1 LCD Interface

6.1.1 General Description

MT6225 contains a versatile LCD controller which is optimized for multimedia applications. This controller supports many types of LCD modules and contains a rich feature set to enhance the functionality. These features are:

- Up to 320 x 240 resolution
- The internal frame buffer supports 8bpp indexed color and RGB 565 format.
- Supports 8-bpp (RGB332), 12-bpp (RGB444), 16-bpp (RGB565), 18-bit (RGB666) and 24-bit (RGB888) LCD modules.
- 4 Layers Overlay with individual color depth, window size, vertical and horizontal offset, source key, alpha value and display rotation control(90°,180°, 270°, mirror and mirror then 90°, 180° and 270°)
- One Color Look-Up Tables

For parallel LCD modules, the LCD controller can reuse external memory interface or use dedicated 8/9/16/18-bit parallel interface to access them and 8080 type interface is supported. It can transfer the display data from the internal SRAM or external SRAM/Flash Memory to the off-chip LCD modules.

For serial LCD modules, this interface performs parallel to serial conversion and both 8- and 9- bit serial interface is supported. The 8-bit serial interface uses four pins – LSCE#, LSDA, LSCK and LSA0 – to enter commands and data. Meanwhile, the 9-bit serial interface uses three pins – LSCE#, LSDA and LSCK – for the same purpose. Data read is not available with the serial interface and data entered must be 8 bits.

Data and command send to LCM are always through the parallel Nandflash/Lcd interface or through serial SPI/LCD interface. Sending LCM signals through EMI is forbidden, but the pixel data produced by LCD controller can be dumped to memory through AHB bus.

IWIT
聯發機密不得洩漏
MTK CONFIDENTIAL
NO DISCLOSURE
IWIT

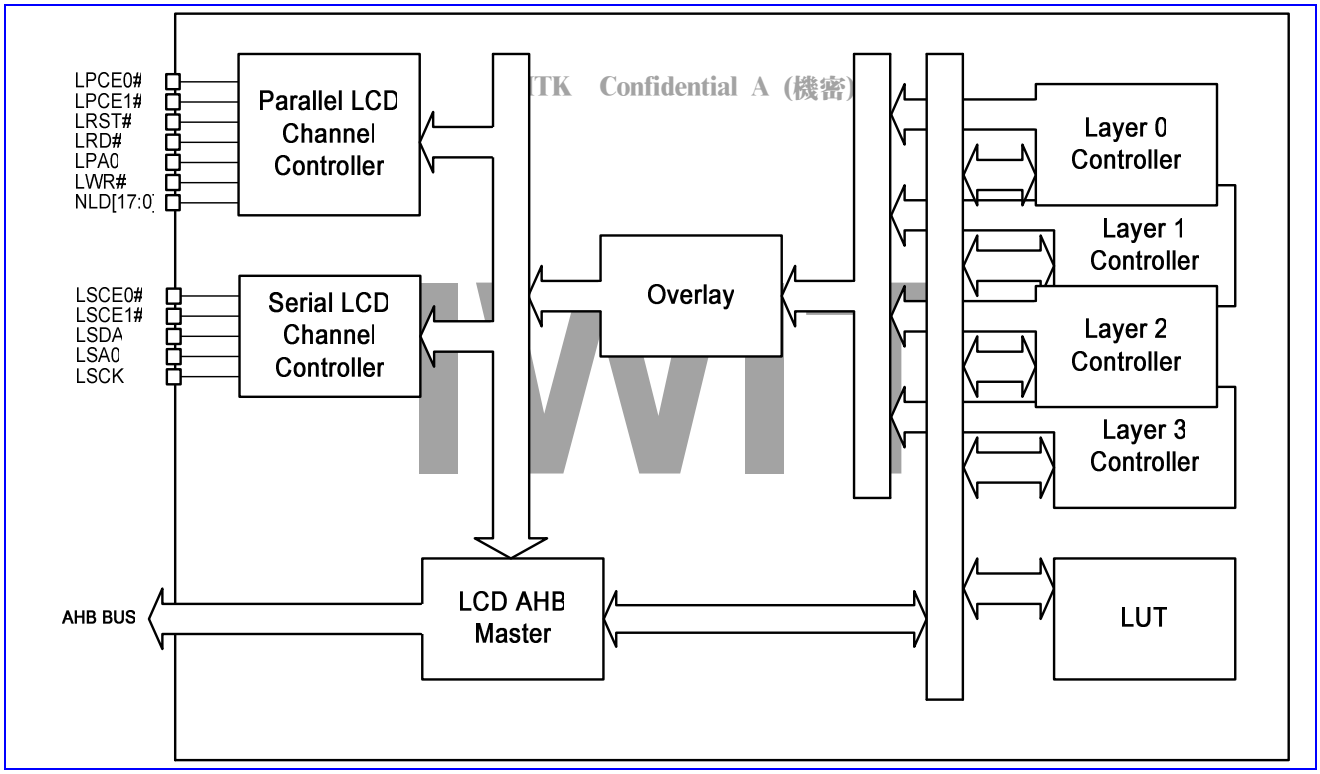

Figure 55 LCD Interface Block Diagram

Figure 56 shows the timing diagram of this serial interface. When the block is idle, LSCK is forced LOW and LSCE# is forced HIGH. Once the data register contains data and the interface is enabled, LSCE# is pulled LOW and remain LOW for the duration of the transmission.

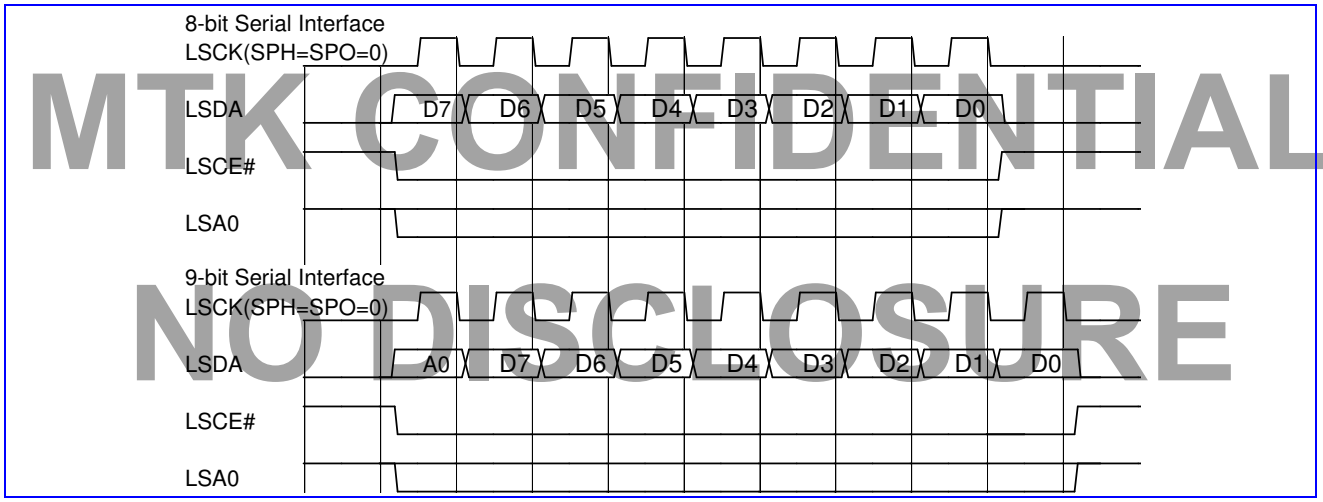

Figure 56 LCD Interface Transfer Timing Diagram

LCD = 0x9000_0000

Address	Register Function	Width	Acronym
LCD + 0000h	LCD Interface Status Register	16	**LCD_STA**
LCD + 0004h	LCD Interface Interrupt Enable Register	16	**LCD_INTEN**
LCD + 0008h	LCD Interface Interrupt Status Register	16	**LCD_INTSTA**
LCD + 000ch	LCD Interface Frame Transfer Register	16	**LCD_START**
LCD + 0010h	LCD Parallel/Serial LCM Reset Register	16	**LCD_RSTB**

MTK Confidential A (機密)
聯發機密不得洩漏
MTK CONFIDENTIAL
NO DISCLOSURE
IWT

MTK Confidential A (機密)

LCD + 0014h	LCD Serial Interface Configuration Register	16	**LCD_SCNF**
LCD + 0018h	LCD Parallel Interface 0 Configuration Register	32	**LCD_PCNF0**
LCD + 001ch	LCD Parallel Interface 1 Configuration Register	32	**LCD_PCNF1**
LCD + 0020h	LCD Parallel Interface 2 Configuration Register	32	**LCD_PCNF2**
LCD + 0024h	LCD Parallel Interface N-to-L Wait Cycle	16	**LCD_N2L_WAIT_CYCLE**
LCD + 0040h	LCD Main Window Size Register	32	**LCD_MWINSIZE**
LCD + 0044h	LCD ROI Window Write to Memory Offset Register	32	**LCD_WROI_W2MOFS**
LCD + 0048h	LCD ROI Window Write to Memory Control Register	16	**LCD_WROI_W2MCON**
LCD + 004ch	LCD ROI Window Write to Memory Address Register	32	**LCD_WROI_W2MADD**
LCD + 0050h	LCD ROI Window Control Register	32	**LCD_WROICON**
LCD + 0054h	LCD ROI Window Offset Register	32	**LCD_WROIOFS**
LCD + 0058h	LCD ROI Window Command Start Address Register	16	**LCD_WROICADD**
LCD + 005ch	LCD ROI Window Data Start Address Register	16	**LCD_WROIDADD**
LCD + 0060h	LCD ROI Window Size Register	32	**LCD_WROISIZE**
LCD + 0068h	LCD ROI Window Background Color Register	32	**LCD_WROI_BGCLR**
LCD + 0070h	LCD Layer 0 Window Control Register	32	**LCD_L0WINCON**
LCD + 0074h	LCD Layer 0 Window Display Offset Register	32	**LCD_L0WINOFS**
LCD + 0078h	LCD Layer 0 Window Display Start Address Register	32	**LCD_L0WINADD**
LCD + 008Ch	LCD Layer 0 Window Size	32	**LCD_L0WINSIZE**
LCD + 0080h	LCD Layer 1 Window Control Register	32	**LCD_L1WINCON**
LCD + 0084h	LCD Layer 1 Window Display Offset Register	32	**LCD_L1WINOFS**
LCD + 0088h	LCD Layer 1 Window Display Start Address Register	32	**LCD_L1WINADD**
LCD + 008Ch	LCD Layer 1 Window Size	32	**LCD_L1WINSIZE**
LCD + 0090h	LCD Layer 2 Window Control Register	32	**LCD_L2WINCON**
LCD + 0094h	LCD Layer 2 Window Display Offset Register	32	**LCD_L2WINOFS**
LCD + 0098h	LCD Layer 2 Window Display Start Address Register	32	**LCD_L2WINADD**
LCD + 009Ch	LCD Layer 2 Window Size	32	**LCD_L2WINSIZE**
LCD + 00A0h	LCD Layer 3 Window Control Register	32	**LCD_L3WINCON**
LCD + 00A4h	LCD Layer 3 Window Display Offset Register	32	**LCD_L3WINOFS**
LCD + 00A8h	LCD Layer 3 Window Display Start Address Register	32	**LCD_L3WINADD**
LCD + 00ACh	LCD Layer 3 Window Size	32	**LCD_L3WINSIZE**
LCD + 4000h	LCD Parallel Interface 0 Data	32	**LCD_PDAT0**
LCD + 4100h	LCD Parallel Interface 0 Command	32	**LCD_PCMD0**
LCD + 5000h	LCD Parallel Interface 1 Data	32	**LCD_PDAT1**
LCD + 5100h	LCD Parallel Interface 1 Command	32	**LCD_PCMD1**
LCD + 6000h	LCD Parallel Interface 2 Data	32	**LCD_PDAT2**
LCD + 6100h	LCD Parallel Interface 2 Command	32	**LCD_PCMD2**
LCD + 8000h	LCD Serial Interface 1 Data	16	**LCD_SDAT1**
LCD + 8100h	LCD Serial Interface 1 Command	16	**LCD_SCMD1**
LCD + 9000h	LCD Serial Interface 0 Data	16	**LCD_SDAT0**
LCD + 9100h	LCD Serial Interface 0 Command	16	**LCD_SCMD0**
LCD + c000h	LCD Color Palette LUT0 Register	32	**LCD_PAL**

IWT
聯發機密不得洩漏
MTK CONFIDENTIAL
NO DISCLOSURE
IWT

~ c3FCh			
LCD + c400h ~ c47Ch	LCD Interface Command/Parameter 0 Register	32	**LCD_COMD0**
LCD + c480h ~ c4FCh	LCD Interface Command/Parameter 1 Register	32	**LCD_COMD1**
LCD + c500h ~ c5FCh	LCD Gamma LUT Register	32	**LCD_GAMMA**

Table 35 Memory Map of LCD Interface

MTK Confidential A (機密)

6.1.2 Register Definitions

LCD +0000h LCD Interface Status Register LCD_STA

Bit	15	14	13	12	11	10	9	8	7	6	5	4	3	2	1	0
Name																**RUN**
Type																R
Reset																0

RUN LCD Interface Running Status

LCD +0004h LCD Interface Interrupt Enable Register LCD_INTEN

Bit	15	14	13	12	11	10	9	8	7	6	5	4	3	2	1	0
Name																**CPL**
Type																R/W
Reset																0

CPL LCD Frame Transfer Complete Interrupt Control

聯發機密不得洩漏

LCD +0008h LCD Interface Interrupt Status Register LCD_INTSTA

Bit	15	14	13	12	11	10	9	8	7	6	5	4	3	2	1	0
Name																**CPL**
Type																R
Reset																0

MTK CONFIDENTIAL

CPL LCD Frame Transfer Complete Interrupt

LCD +000Ch LCD Interface Frame Transfer Register LCD_START

Bit	15	14	13	12	11	10	9	8	7	6	5	4	3	2	1	0
Name	**START**															
Type	R/W															
Reset	0															

START Start Control of LCD Frame Transfer

LCD +0010h LCD Parallel/Serial Interface Reset Register LCD_RSTB

Bit	15	14	13	12	11	10	9	8	7	6	5	4	3	2	1	0
Name																**RSTB**
Type																R/W
Reset																1

RSTB Parallel/Serial LCD Module Reset Control

LCD +0014h LCD Serial Interface Configuration Register LCD _SCNF

Bit	15	14	13	12	11	10	9	8	7	6	5	4	3	2	1	0
Name	**26M**	**13M**	**GAMMA_ID**				**CSP1**	**CSP0**				**8/9**	**DIV**		**SPH**	**SPO**
Type	R/W	R/W	R/W				R/W	R/W				R/W	R/W		R/W	R/W

Type	0	0	0			0	0				0	0	0	0

SPO Clock Polarity Control

MTK Confidential A (機密)

SPH Clock Phase Control

DIV Serial Clock Divide Select Bits

8/9 8-bit or 9-bit Interface Selection

CSP0 Serial Interface Chip Select 0 Polarity Control

CSP1 Serial Interface Chip Select 1 Polarity Control

GAMMA_ID Serial Interface Gamma Table Selection

- **00** table 0
- **01** table 1
- **10** table 2
- **11** no table selected

13M Enable 13MHz clock gating

26M Enable 26MHz clock gating

IWIT

LCD +0018h LCD Parallel Interface Configuration Register 0 LCD_PCNF0

Bit	31	30	29	28	27	26	25	24	23	22	21	20	19	18	17	16
Name	C2WS		C2WH		C2RS				GAMMA_ID_R		GAMMA_ID_G		GAMMA_ID_B		DW	
Type	R/W		R/W		R/W				R/W		R/W		R/W		R/W	
	0		0		0				0		0		0		0	
Bit	15	14	13	12	11	10	9	8	7	6	5	4	3	2	1	0
Name	26M	13M		WST								RLT				
Type	R/W	R/W		R/W								R/W				
Reset	0	0		0								0				

聯發機密不得洩漏

RLT Read Latency Time

WST Write Wait State Time

13M Enable 13MHz clock gating

26M Enable 26MHz clock gating

DW Data width of the parallel interface

- **00** 8-bit.
- **01** 9-bit
- **10** 16-bit
- **11** 18-bit

MTK CONFIDENTIAL

GAMMA_ID_R Gamma Correction LUT ID for Red Component

NO DISCLOSURE

- **00** table 0
- **01** table 1
- **10** table 2
- **11** no table selected

GAMMA_ID_G Gamma correction LUT ID for Green Component

- **00** table 0
- **01** table 1
- **10** table 2
- **11** no table selected

IWIT

GAMMA_ID_B Gamma correction LUT ID for Blue Component

- **00** table 0
- **01** table 1
- **10** table 2
- **11** no table selected

C2RS Chip Select (LPCE#) to Read Strobe (LRD#) Setup Time

C2WH Chip Select (LPCE#) to Write Strobe (LWR#) Hold Time

C2WS Chip Select (LPCE#) to Write Strobe (LWR#) Setup Time

MTK Confidential A (機密)

LCD +001Ch LCD Parallel Interface Configuration Register 1 LCD_PCNF1

Bit	31	30	29	28	27	26	25	24	23	22	21	20	19	18	17	16
Name	C2WS		C2WH		C2RS						GAMM_ID				DW	
Type	R/W		R/W		R/W						R/W				R/W	
	0		0		0						0				0	
Bit	15	14	13	12	11	10	9	8	7	6	5	4	3	2	1	0
Name	26M	13M		WST								RLT				
Type	R/W	R/W		R/W								R/W				
Reset	0	0		0								0				

RLT Read Latency Time

WST Write Wait State Time

13M Enable 13MHz clock gating

26M Enable 26MHz clock gating

DW Data width of the parallel interface

- **00** 8-bit.
- **01** 9-bit
- **10** 16-bit
- **11** 18-bit

GAMMA_ID Gamma correction LUT ID for RGB component

- **00** table 0
- **01** table 1
- **10** table 2
- **11** no table selected

C2RS Chip Select (LPCE#) to Read Strobe (LRD#) Setup Time

C2WH Chip Select (LPCE#) to Write Strobe (LWR#) Hold Time

C2WS Chip Select (LPCE#) to Write Strobe (LWR#) Setup Time

聯發機密不得洩漏
MTK CONFIDENTIAL
NO DISCLOSURE
IWIT

LCD +0020h LCD Parallel Interface Configuration Register 2 LCD_PCNF2

Bit	31	30	29	28	27	26	25	24	23	22	21	20	19	18	17	16
Name	C2WS		C2WH		C2RS						GAMMA_ID				DW	
Type	R/W		R/W		R/W						R/W				R/W	
	0		0		0						0				0	
Bit	15	14	13	12	11	10	9	8	7	6	5	4	3	2	1	0
Name	26M	13M		WST								RLT				
Type	R/W	R./W		R/W								R/W				
Reset	0	0		0								0				

RLT Read Latency Time

WST Write Wait State Time

13M Enable 13MHz clock gating.

26M Enable 26MHz clock gating.

DW Data width of the parallel interface

- **00** 8-bit.
- **01** 9-bit
- **10** 16-bit
- **11** 18-bit

GAMMA_ID Gamma Correction LUT ID

- **00** table 0

01 table 1
10 table 2
11 no table selected

MTK Confidential A (機密)

C2RS Chip Select (LPCE#) to Read Strobe (LRD#) Setup Time
C2WH Chip Select (LPCE#) to Write Strobe (LWR#) Hold Time
C2WS Chip Select (LPCE#) to Write Strobe (LWR#) Setup Time

LCD +0024h LCD N-to-L Wait Cycle Register LCD_N2L_WAIT_CYCLE

Bit	15	14	13	12	11	10	9	8	7	6	5	4	3	2	1	0
Name													N2L_WAIT_CYCLE			
Type													R/W			
Reset													0			

N2L_WAIT_CYCLE Wait cycle between Nandflash to LCD bus grant. The period is (N2L_WAIT_CYCLE+1).

LCD +4000h LCD Parallel 0 Interface Data LCD_PDAT0

Bit	31	30	29	28	27	26	25	24	23	22	21	20	19	18	17	16
Name	DATA[31:16]															
Type	R/W															
Bit	15	14	13	12	11	10	9	8	7	6	5	4	3	2	1	0
Name	DATA[15:0]															
Type	R/W															

DATA Writing to LCD+4000 will drive LPA0 low when sending this data out in parallel BANK0, while writing to LCD+4100 will drive LPA0 high.

LCD +5000h LCD Parallel 1 Interface Data LCD_PDAT1

Bit	31	30	29	28	27	26	25	24	23	22	21	20	19	18	17	16
Name	DATA[31:16]															
Type	R/W															
Bit	15	14	13	12	11	10	9	8	7	6	5	4	3	2	1	0
Name	DATA[15:0]															
Type	R/W															

DATA Writing to LCD+5000 will drive LPA0 low when sending this data out in parallel BANK1, while writing to LCD+5100 will drive LPA0 high

LCD +6000h LCD Parallel 2 Interface Data LCD_PDAT2

Bit	31	30	29	28	27	26	25	24	23	22	21	20	19	18	17	16
Name	DATA[31:16]															
Type	R/W															
Bit	15	14	13	12	11	10	9	8	7	6	5	4	3	2	1	0
Name	DATA[15:0]															
Type	R/W															

DATA Writing to LCD+6000 will drive LPA0 low when sending this data out in parallel BANK2, while writing to LCD+6100 will drive LPA0 high

LCD +8000/8100h LCD Serial Interface 1 Data LCD_SDAT1

Bit	15	14	13	12	11	10	9	8	7	6	5	4	3	2	1	0
Name												DATA				
Type												W				

聯發機密不得洩漏
MTK CONFIDENTIAL
NO DISCLOSURE

DATA Writing to LCD+8000 will drive LSA0 low while sending this data out in serial BANK1, while writing to LCD+8100 will drive LSA0 high

MTK Confidential A (機密)

LCD +9000/9100h LCD Serial Interface 0 Data LCD_SDAT0

Bit	15	14	13	12	11	10	9	8	7	6	5	4	3	2	1	0
Name									DATA							
Type									W							

DATA Writing to LCD+9000 will drive LSA0 low while sending this data out in serial BANK0, while writing to LCD+9100 will drive LSA0 high

LCD +0040h Main Window Size Register LCD_MWINSIZE

Bit	31	30	29	28	27	26	25	24	23	22	21	20	19	18	17	16
Name							ROW									
Type							R/W									
Bit	15	14	13	12	11	10	9	8	7	6	5	4	3	2	1	0
Name							COLUMN									
Type							R/W									

COLUMN 10-bit Virtual Image Window Column Size

ROW 10-bit Virtual Image Window Row Size

LCD +0044h Region of Interest Window Write to Memory Offset Register LCD_WROI_W2MOFS

Bit	31	30	29	28	27	26	25	24	23	22	21	20	19	18	17	16
Name							Y-OFFSET									
Type							R/W									
Bit	15	14	13	12	11	10	9	8	7	6	5	4	3	2	1	0
Name							X-OFFSET									
Type							R/W									

This control register is used to specify the offset of the ROI window from the LCD_WROI_W2MADDR when writing the ROI window's content to memory.

X-OFFSET the x offset of ROI window in the destination memory.

Y-OFFSET the y offset of ROI window in the destination memory.

LCD +0048h Region of Interest Window Write to Memory Control Register LCD_WROI_W2MOON

Bit	15	14	13	12	11	10	9	8	7	6	5	4	3	2	1	0
Name														DISCON		W2LCM
Type														R/W		R/W
Reset														0		0

This control register is effective only when the W2M bit is set in LCD_WROICON register.

W2LCM Write to LCM simultaneously.

DISCON Block Write Enable Control. By setting both DISCON and W2M to 1, the LCD controller will write out the ROI pixel data as a part of MAIN window, using the width of MAIN window to calculate the write-out address. If this bit is not set, the ROI window will be written to memory in continuous addresses.

LCD +004Ch Region of Interest Window Write to Memory Address Register LCD_WROI_W2MADD

Bit	31	30	29	28	27	26	25	24	23	22	21	20	19	18	17	16
Name	W2M_ADDR															

聯發科技 密不得洩漏
MTK CONFIDENTIAL
NO DISCLOSURE
IWIT

Type	R/W															
Bit	15	14	13	12	11	10	9	8	7	6	5	4	3	2	1	0
Name	W2M_ADDR															
Type	R/W															

MTK Confidential A (機密)

W2M_ADDR Write to memory address.

LCD +0050h Region of Interest Window Control Register

LCD_WROICON

Bit	31	30	29	28	27	26	25	24	23	22	21	20	19	18	17	16
Name	EN0	EN1	EN2	EN3							PERIOD					
Type	R/W	R/W	R/W	R/W							R/W					
Bit	15	14	13	12	11	10	9	8	7	6	5	4	3	2	1	0
Name	ENC	W2M	COM M_SE L	COMMAND					FORMAT							
Type	R/W	R/W	R/W	R/W					R/W							

FORMAT LCD Module Data Format

Bit 0 : in BGR sequence, otherwise in RGB sequence.

Bit 1 : LSB first, otherwise MSB first.

Bit 2 : padding bits on MSBs, otherwise on LSBs.

Bit 5-3 : 000 for RGB332, 001 for RGB444, 010 for RGB565, 011 for RGB666, 100 for RGB888.

Bit 7-6 : 00 for 8-bit interface, 01 for 16-bit interface, 10 for 9-bit interface, 11 for 18-bit interface.

Note: When the interface is configured as 9 bit or 18 bit, the field of bit5-2 is ignored.

00000000	8bit	1cycle/1pixel	RGB3.3.2	RRRGGGBB
00000001		1cycle/1pixel	RGB3.3.2	BBGGGRRR
00001000		3cycle/2pixel	RGB4.4.4	RRRRGGGG BBBBRRRR GGGGBBBB
00001011		3cycle/2pixel	RGB4.4.4	GGGGRRRR RRRRBBBB BBBBGGGG
00010000		2cycle/1pixel	RGB5.6.5	RRRRRGGG GGGBBBBB
00010011		2cycle/1pixel	RGB5.6.5	GGGRRRRR BBBBBGGG
00011000		3cycle/1pixel	RGB6.6.6	RRRRRRXX GGGGGGXX BBBBBBXX
00011100		3cycle/1pixel	RGB6.6.6	XXRRRRRR XXGGGGGG XXBBBBBB
00100000		3cycle/1pixel	RGB8.8.8	RRRRRRRR GGGGGGGG BBBBBBBB
10011000	9bit	2cycle/1pixel	RGB6.6.6	RRRRRRGGG GGGBBBBBB
10011011		2cycle/1pixel	RGB6.6.6	GGGRRRRRR BBBBBBGGG
01000000	16bit	1cycle/2pixel	RGB3.3.2	RRRGGGBBRRRGGGBB

聯發機密不得洩漏
MTK CONFIDENTIAL
NO DISCLOSURE
IWIT

01000010		1cycle/2pixel	RGB3.3.2	RRRGGGBBRRRGGGBB
01000001		1cycle/2pixel	RGB3.3.2	BBGGGRRRBBGGGRRR
01000011		1cycle/2pixel	RGB3.3.2	BBGGGRRRBBGGGRRR
01001100		1cycle/1pixel	RGB4.4.4	XXXXRRRRGGGGBBBB
01001101		1cycle/1pixel	RGB4.4.4	XXXXBBBBGGGGRRRR
01001000		1cycle/1pixel	RGB4.4.4	RRRRGGGGBBBBXXXX
01001001		1cycle/1pixel	RGB4.4.4	BBBBGGGGRRRRXXXX
01010000		1cycle/1pixel	RGB5.6.5	RRRRRGGGGGGBBBBB
01010001		1cycle/1pixel	RGB5.6.5	BBBBBGGGGGGRRRRR
01011100		3cycle/2pixel	RGB6.6.6	XXXXRRRRRRGGGGGG XXXXBBBBBBRRRRRR XXXXGGGGGGBBBBBB
01011111		3cycle/2pixel	RGB6.6.6	XXXXGGGGGGRRRRRR XXXXRRRRRRBBBBBB XXXXBBBBBBGGGGGG
01011000		3cycle/2pixel	RGB6.6.6	RRRRRRGGGGGGXXXX BBBBBBRRRRRRXXXX GGGGGGBBBBBBXXXX
01011011		3cycle/2pixel	RGB6.6.6	GGGGGGRRRRRRXXXX RRRRRRBBBBBBXXXX BBBBBBGGGGGGXXXX
01100000		3cycle/2pixel	RGB8.8.8	RRRRRRRRGGGGGGGG BBBBBBBBRRRRRRRR GGGGGGGGBBBBBBBB
01100011		3cycle/2pixel	RGB8.8.8	GGGGGGGGRRRRRRRR RRRRRRRRBBBBBBBB BBBBBBBBRRRRRRRR
11011000	18bit	1cycle/1pixel	RGB6.6.6	RRRRRRGGGGGGBBBBBB
11011001		1cycle/1pixel	RGB6.6.6	BBBBBBGGGGGGRRRRRR
11100000		3cycle/2pixel	RGB8.8.8	RRRRRRRRGGGGGGGG BBBBBBBBRRRRRRRR GGGGGGGGBBBBBBBB
11100011		3cycle/2pixel	RGB8.8.8	GGGGGGGGRRRRRRRR RRRRRRRRBBBBBBBB BBBBBBBBRRRRRRRR

MTK Confidential A (機密)
IWIT
聯發機密不得洩漏
MTK CONFIDENTIAL
NO DISCLOSURE

COMMAND Number of Commands to be sent to LCD module. Maximum is 31.

COMM_SEL Command Queue Selection, 0 for LCD_COMD0 , 1 for LCD_COMD1.

W2M Enable Data Address Increasing After Each Data Transfer

ENC Command Transfer Enable Control

PERIOD Waiting period between two consecutive transfers, effective for both data and command.

ENn Layer Window Enable Control

LCD +0054h Region of Interest Window Offset Register LCD_WROIOFS

Bit	31	30	29	28	27	26	25	24	23	22	21	20	19	18	17	16
Name							Y-OFFSET									
Type							R/W									
Bit	15	14	13	12	11	10	9	8	7	6	5	4	3	2	1	0
Name							X-OFFSET									
Type							R/W									

X-OFFSET ROI Window Column Offset
Y-OFFSET ROI Window Row Offset

MTK Confidential A (機密)

LCD +0058h Region of Interest Window Command Start Address Register LCD_WROICADD

Bit	15	14	13	12	11	10	9	8	7	6	5	4	3	2	1	0
Name	ADDR															
Type	R/W															

ADDR ROI Window Command Address. Only writing to LCD modules is allowed.

LCD +005Ch Region of Interest Window Data Start Address Register LCD_WROIDADD

Bit	15	14	13	12	11	10	9	8	7	6	5	4	3	2	1	0
Name	ADDR															
Type	R/W															

ADDR ROI Window Data Address Only writing to LCD modules is allowed.

LCD +0060h Region of Interest Window Size Register LCD_WROISIZE

Bit	31	30	29	28	27	26	25	24	23	22	21	20	19	18	17	16
Name							ROW									
Type							R/W									
Bit	15	14	13	12	11	10	9	8	7	6	5	4	3	2	1	0
Name							COLUMN									
Type							R/W									

COLUMN ROI Window Column Size (height)
ROW ROI Window Row Size (width)

LCD +0068h Region of Interest Background Color Register LCD_WROI_BGCLR

Bit	15	14	13	12	11	10	9	8	7	6	5	4	3	2	1	0
Name	RED[4:0]					GREEN[5:0]						BLUE[4:0]				
Type	R/W					R/W						R/W				
Reset	1_1111					11_1111						1_1111				

RED Red component of ROI window's background color
GREEN Green component of ROI window's background color
BLUE Blue component of ROI window's background color

LCD +0070h Layer 0 Window Control Register LCD_L0WINCON

Bit	31	30	29	28	27	26	25	24	23	22	21	20	19	18	17	16
Name	SRCKEY															
Type	R/W															
Bit	15	14	13	12	11	10	9	8	7	6	5	4	3	2	1	0
Name	SRC	KEYEN	ROTATE			PLAEN		OPAEN	OPA							SWP
Type	R/W	R/W	R/W			R/W		R/W	R/W							R/W

SWP Swap high byte and low byte of pixel data
OPA Opacity value, used as constant alpha value.
OPAEN Opacity enabled
PLAEN Color Palette enabled(8bpp indexed color mode), otherwise in RGB565 mode.

IWIT 聯發科技密不得洩漏 MTK CONFIDENTIAL NO DISCLOSURE IWIT

ROTATE Rotation Configuration

- **000** 0 degree rotation
- **001** 90 degree rotation anti-counterclockwise
- **010** 180 degree rotation anti-counterclockwise
- **011** 270 degree rotation anti-counterclockwise
- **100** Horizontal flip
- **101** Horizontal flip then 90 degree rotation anti-counterclockwise
- **110** Horizontal flip then 180 degree rotation anti-counterclockwise
- **111** Horizontal flip then 270 degree rotation anti-counterclockwise

KEYEN Source Key Enable Control

SRC Disable auto-increment of the source pixel address

MTK Confidential A (機密)

LCD +0074h Layer 0 Window Display Offset Register

LCD_L0WINOFS

Bit	31	30	29	28	27	26	25	24	23	22	21	20	19	18	17	16
Name							Y-OFFSET									
Type							R/W									
Bit	15	14	13	12	11	10	9	8	7	6	5	4	3	2	1	0
Name							X-OFFSET									
Type							R/W									

Y-OFFSET Layer 0 Window Row Offset

X-OFFSET Layer 0 Window Column Offset

聯發機密不得洩漏

LCD+0078h Layer 0 Window Display Start Address Register

LCD_L0WINADD

Bit	31	30	29	28	27	26	25	24	23	22	21	20	19	18	17	16
Name	ADDR															
Type	R/W															
Bit	15	14	13	12	11	10	9	8	7	6	5	4	3	2	1	0
Name	ADDR															
Type	R/W															

MTK CONFIDENTIAL

ADDR Layer 0 Window Data Address

LCD +007Ch Layer 0 Window Size

LCD_L0WINSIZE

NO DISCLOSURE

Bit	31	30	29	28	27	26	25	24	23	22	21	20	19	18	17	16
Name							ROW									
Type							R/W									
Bit	15	14	13	12	11	10	9	8	7	6	5	4	3	2	1	0
Name							COLUMN									
Type							R/W									

ROW Layer 0 Window Row Size

COLUMN Layer 0 Window Column Size

LCD +0080h Layer 1 Window Control Register

LCD_L1WINCON

Bit	31	30	29	28	27	26	25	24	23	22	21	20	19	18	17	16
Name	SRCKEY															
Type	R/W															
Bit	15	14	13	12	11	10	9	8	7	6	5	4	3	2	1	0
Name	SRC	KEYEN	ROTATE			PLAEN	PLA0/1	OPAEN	OPA							SWP

Type	R/W	R/W	R/W	R/W	R/W	R/W	R/W		R/W

MTK Confidential A (機密)

SWP Swap high byte and low byte of pixel data
OPA Opacity value, used as constant alpha value.
OPAEN Opacity enabled
PLA0/1 Palette 0 or 1 selection
PLAEN Color Palette enabled(8bpp indexed color mode), otherwise in RGB565 mode.
ROTATE Rotation Configuration

- **000** 0 degree rotation
- **001** 90 degree rotation counterclockwise
- **010** 180 degree rotation counterclockwise
- **011** 270 degree rotation counterclockwise
- **100** Horizontal flip
- **101** Horizontal flip then 90 degree rotation counterclockwise
- **110** Horizontal flip then 180 degree rotation counterclockwise
- **111** Horizontal flip then 270 degree rotation counterclockwise

KEYEN Source Key Enable Control
SRC Disable auto-increment of the source pixel address

IWIT

LCD +0084h Layer 1 Window Display Offset Register

LCD_L1WINOFS

Bit	31	30	29	28	27	26	25	24	23	22	21	20	19	18	17	16
Name							Y-OFFSET									
Type							R/W									
Bit	15	14	13	12	11	10	9	8	7	6	5	4	3	2	1	0
Name							X-OFFSET									
Type							R/W									

嵌入式研究中心 密不得洩漏

Y-OFFSET Layer 1 Window Row Offset
X-OFFSET Layer 1 Window Column Offset

MTK CONFIDENTIAL

LCD+0088h Layer 1 Window Display Start Address Register

LCD_L1WINADD

Bit	31	30	29	28	27	26	25	24	23	22	21	20	19	18	17	16
Name	ADDR															
Type	R/W															
Bit	15	14	13	12	11	10	9	8	7	6	5	4	3	2	1	0
Name	ADDR															
Type	R/W															

NO DISCLOSURE

ADDR Layer 1 Window Data Address

LCD +008Ch Layer 1 Window Size

LCD_L1WINSIZE

Bit	31	30	29	28	27	26	25	24	23	22	21	20	19	18	17	16
Name							ROW									
Type							R/W									
Bit	15	14	13	12	11	10	9	8	7	6	5	4	3	2	1	0
Name							COLUMN									
Type							R/W									

IWIT

ROW Layer 1 Window Row Size
COLUMN Layer 1 Window Column Size

LCD +0090h Layer 2 Window Control Register

LCD_L2WINCON

MTK Confidential A (機密)

Bit	31	30	29	28	27	26	25	24	23	22	21	20	19	18	17	16
Name	SRCKEY															
Type	R/W															
Bit	15	14	13	12	11	10	9	8	7	6	5	4	3	2	1	0
Name	SRC	KEYEN	ROTATE			PLAEN	PLA0/1	OPAEN	OPA							SWP
Type	R/W	R/W	R/W			R/W	R/W	R/W	R/W							R/W

SWP Swap high byte and low byte of pixel data

OPA Opacity value, used as constant alpha value.

OPAEN Opacity enabled

PLA0/1 Palette 0 or 1 selection

PLAEN Color Palette enabled(8bpp indexed color mode), otherwise in RGB565 mode.

ROTATE Rotation Configuration

- **000** 0 degree rotation
- **001** 90 degree rotation anti-counterclockwise
- **010** 180 degree rotation anti-counterclockwise
- **011** 270 degree rotation anti-counterclockwise
- **100** Horizontal flip
- **101** Horizontal flip then 90 degree rotation anti-counterclockwise
- **110** Horizontal flip then 180 degree rotation anti-counterclockwise
- **111** Horizontal flip then 270 degree rotation anti-counterclockwise

KEYEN Source Key Enable Control

SRC Disable auto-increment of the source pixel address

聯發機密不得洩漏

LCD +0094h Layer 2 Window Display Offset Register

LCD_L2WINOFS

MTK CONFIDENTIAL

Bit	31	30	29	28	27	26	25	24	23	22	21	20	19	18	17	16
Name							Y-OFFSET									
Type							R/W									
Bit	15	14	13	12	11	10	9	8	7	6	5	4	3	2	1	0
Name							X-OFFSET									
Type							R/W									

Y-OFFSET Layer 2 Window Row Offset

X-OFFSET Layer 2 Window Column Offset

NO DISCLOSURE

LCD+0098h Layer 2 Window Display Start Address Register

LCD_L2WINADD

Bit	31	30	29	28	27	26	25	24	23	22	21	20	19	18	17	16
Name	ADDR															
Type	R/W															
Bit	15	14	13	12	11	10	9	8	7	6	5	4	3	2	1	0
Name	ADDR															
Type	R/W															

ADDR Layer 1 Window Data Address

IWIT

LCD +009Ch Layer 2 Window Size

LCD_L2WINSIZE

Bit	31	30	29	28	27	26	25	24	23	22	21	20	19	18	17	16

Name							ROW									
Type							R/W									
Bit	15	14	13	12	11	10	9	8	7	6	5	4	3	2	1	0
Name							COLUMN									
Type							R/W									

MTK Confidential A (機密)

ROW Layer 2 Window Row Size

COLUMN Layer 2 Window Column Size

LCD +00A0h Layer 3 Window Control Register LCD_L3WINCON

Bit	31	30	29	28	27	26	25	24	23	22	21	20	19	18	17	16
Name																SWP
Type																R/W
Bit	15	14	13	12	11	10	9	8	7	6	5	4	3	2	1	0
Name	SRC	KEYEN	ROTATE			CLRDPT		OPAEN	OPA							
Type	R/W	R/W	R/W			R/W		R/W	R/W							

SWP Swap high byte and low byte of pixel data

OPA Opacity value, used as constant alpha value.

OPAEN Opacity enabled

PLA0/1 Palette 0 or 1 selection

PLAEN Color Palette enabled(8bpp indexed color mode), otherwise in RGB565 mode.

ROTATE Rotation Configuration

- **000** 0 degree rotation
- **001** 90 degree rotation anti-counterclockwise
- **010** 180 degree rotation anti-counterclockwise
- **011** 270 degree rotation anti-counterclockwise
- **100** Horizontal flip
- **101** Horizontal flip then 90 degree rotation anti-counterclockwise
- **110** Horizontal flip then 180 degree rotation anti-counterclockwise
- **111** Horizontal flip then 270 degree rotation anti-counterclockwise

KEYEN Source Key Enable Control

SRC Disable auto-increment of the source pixel address

聯發機密不得洩漏
MTK CONFIDENTIAL
NO DISCLOSURE

LCD +00A4h Layer 3 Window Display Offset Register LCD_L3WINOFS

Bit	31	30	29	28	27	26	25	24	23	22	21	20	19	18	17	16
Name							Y-OFFSET									
Type							R/W									
Bit	15	14	13	12	11	10	9	8	7	6	5	4	3	2	1	0
Name							X-OFFSET									
Type							R/W									

Y-OFFSET Layer 3 Window Row Offset

X-OFFSET Layer 3 Window Column Offset

LCD+00A8h Layer 3 Window Display Start Address Register LCD_L3WINADD

Bit	31	30	29	28	27	26	25	24	23	22	21	20	19	18	17	16
Name	ADDR															
Type	R/W															
Bit	15	14	13	12	11	10	9	8	7	6	5	4	3	2	1	0

Name	ADDR
Type	R/W

MTK Confidential A (機密)

ADDR Layer 3 Window Data Address

LCD +00ACh Layer 3 Window Size LCD_L3WINSIZE

Bit	31	30	29	28	27	26	25	24	23	22	21	20	19	18	17	16
Name							ROW									
Type							R/W									
Bit	15	14	13	12	11	10	9	8	7	6	5	4	3	2	1	0
Name											COLUMN					
Type											R/W					

ROW Layer 3 Window Row Size

COLUMN Layer 3 Window Column Size

LCD +C000h~C3FCh LCD Interface Color Palette LUT Registers LCD_PAL

Bit	31	30	29	28	27	26	25	24	23	22	21	20	19	18	17	16
Name															RED[5:4]	
Type															R/W	
Bit	15	14	13	12	11	10	9	8	7	6	5	4	3	2	1	0
Name	RED[3:0]				GREEN[5:0]						BLUE[5:0]					
Type	R/W				R/W						R./W					

LUT0 These Bits Set Palettte LUT Data in RGB666 Format

聯發機密不得洩漏

LCD +C400h~C47C LCD Interface Command/Parameter 0 Registers LCD_COMD0

Bit	31	30	29	28	27	26	25	24	23	22	21	20	19	18	17	16
Name														C0	COMM[17:16]	
Type														R/W	R/W	
Bit	15	14	13	12	11	10	9	8	7	6	5	4	3	2	1	0
Name	COMM[15:0]															
Type	R/W															

MTK CONFIDENTIAL

COMM Command Data and Parameter Data for LCD Module

C0 Write to ROI Command Address if C0 = 1, otherwise write to ROI Data Address

NO DISCLOSURE

LCD +C480h~C500 LCD Interface Command/Parameter 1 Registers LCD_COMD1

Bit	31	30	29	28	27	26	25	24	23	22	21	20	19	18	17	16
Name														C0	COMM[17:16]	
Type														R/W	R/W	
Bit	15	14	13	12	11	10	9	8	7	6	5	4	3	2	1	0
Name	COMM[15:0]															
Type	R/W															

COMM Command Data and Parameter Data for LCD Module

C0 Write to ROI Command Address if C0 = 1, otherwise write to ROI Data Address

LCD +C500h~C5FCh LCD Interface Gamma LUT Registers LCD_GAMMA

Bit	31	30	29	28	27	26	25	24	23	22	21	20	19	18	17	16
Name															TABLE_2[5:4]	
Type															R/W	

Bit	15	14	13	12	11	10	9	8	7	6	5	4	3	2	1	0
Name	TABLE_2[3:0]				TABLE_1[5:0]						TABLE_0[5:0]					
Type	R/W				R/W						R./W					

MTK Confidential A (機密)

TABLE_0 These Bits Set the Values of Gamma Table 0
TABLE_1 These Bits Set the Values of Gamma Table 1
TABLE_2 These Bits Set the Values of Gamma Table 2

6.2 Image Resizer

6.2.1 General Description

This block provides the image resizing function for image and video capturing scenarios. It receives image data from the ISP module, performs the image resizing function and outputs either RGB565 or YUV420 to the GMC module. **Figure 57** shows the block diagram. The capture resize is composed of horizontal and vertical resizing blocks. It can scale up or down the input image by any ratio. However, the maximum sizes of input and output images are limited to 2047x2047.

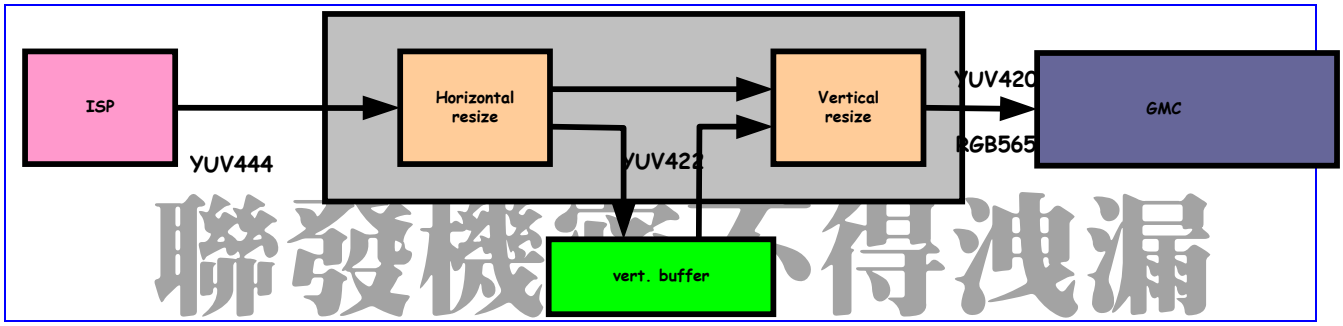

Figure 57 Overview of Image Resizer

The base address of Image Resizer is 0x8061_0000.

6.2.2 Fine Resizing

Fine resizing is composed of horizontal resizing and vertical resizing. It has fractional resizing capability. The image input to fine resizing has size limit of maximum 2047x2047, so does the output of fine resizing. For the sake of cost and speed, the algorithm used in fine resizing is bilinear algorithm. In horizontal resizing working memory enough to fill in two scan-lines is needed. Of course dual buffer or more can be used. For pixel-based image, horizontal or vertical resizing can be trigged if necessarily or disabled if unnecessarily. However, if horizontal/vertical resizing is unnecessary and trigged, then horizontal/vertical resizing must be reset after resizing finishes.

6.2.3 YUV2RGB

Format translation from YUV domain to RGB domain is provided after vertical resizing. The sources of YUV2RGB are image data on the fly after vertical resizing. RGB is in format of 5-6-5. RGB output from YUV2RGB is in format of 5-6-5. That is, one pixel occupies two bytes.

IWIT
聯發機密不得洩漏
MTK CONFIDENTIAL
NO DISCLOSURE
IWIT

		MSB		LSB	Memory Address
Line 1	pixel 1	R (5bits)	G (6 bits)	B (5 bits)	0
	pixel 2	R (5bits)	G (6 bits)	B (5 bits)	2
	pixel 3	R (5bits)	G (6 bits)	B (5 bits)	4
	pixel 4	R (5bits)	G (6 bits)	B (5 bits)	6
	pixel W	R (5bits)	G (6 bits)	B (5 bits)	2x(W-1)
Line 2	pixel 1	R (5bits)	G (6 bits)	B (5 bits)	2W
	pixel 2	R (5bits)	G (6 bits)	B (5 bits)	2W+2
	pixel 3	R (5bits)	G (6 bits)	B (5 bits)	2W+4
	pixel 4	R (5bits)	G (6 bits)	B (5 bits)	2W+6
	pixel W	R (5bits)	G (6 bits)	B (5 bits)	2x(2W-1)

Figure 58 RGB Format

6.2.4 Register Definitions

REGISTER ADDRESS	REGISTER NAME	SYNONYM
RESZ+ 0000h	Image Resizer Configuration Register	RESZ_CFG
RESZ + 0004h	Image Resizer Control Register	RESZ_CON
RESZ + 0008h	Image Resizer Status Register	RESZ_STA
RESZ + 000Ch	Image Resizer Interrupt Register	RESZ_INT
RESZ + 0010h	Image Resizer Source Image Size Register 1	RESZ_SRCSZ1
RESZ + 0014h	Image Resizer Target Image Size Register 1	RESZ_TARSZ1
RESZ + 0018h	Image Resizer Horizontal Ratio Register 1	RESZ_HRATIO1
RESZ + 001Ch	Image Resizer Vertical Ratio Register 1	RESZ_VRATIO1
RESZ + 0020h	Image Resizer Horizontal Residual Register 1	RESZ_HRES1
RESZ + 0024h	Image Resizer Vertical Residual Register 1	RESZ_VRES1
RESZ + 0040h	Image Resizer Fine Resizing Configuration Register	RESZ_FRCFG
RESZ + 005Ch	Image Resizer Pixel-Based Resizing Working Memory Base Address	RESZ_PRWMBASE
RESZ + 0080h	Image Resizer YUV2RGB Configuration Register	RESZ_YUV2RGB
RESZ + 0084h	Image Resizer Target Memory Base Address Register 1 (RGB565)	RESZ_TMBASE1
RESZ + 0088h	Image Resizer Target Memory Base Address Register 2 (RGB565)	RESZ_TMBASE2
RESZ + 00B0h	Image Resizer Information Register 0	RESZ_INFO0
RESZ + 00B8h	Image Resizer Information Register 2	RESZ_INFO2
RESZ + 00BCh	Image Resizer Information Register 3	RESZ_INFO3
RESZ + 00C0h	Image Resizer Information Register 4	RESZ_INFO4
RESZ + 00C4h	Image Resizer Information Register 5	RESZ_INFO5

聯發機密不得洩漏
MTK CONFIDENTIAL
NO DISCLOSURE
IWIT

RESZ + 00D0h	Image Resizer Target Memory Base Address for Y (YUV420 mode)	RESZ_TMBASE_Y
RESZ + 00D4h	Image Resizer Target Memory Base Address for U (YUV420 mode)	RESZ_TMBASE_U
RESZ + 00D8h	Image Resizer Target Memory Base Address for V (YUV420 mode)	RESZ_TMBASE_V

MTK Confidential A (機密)

RESZ+0000h Image Resizer Configuration Register RESZ_CFG

Bit	31	30	29	28	27	26	25	24	23	22	21	20	19	18	17	16
Name																
Type																
Reset																
Bit	15	14	13	12	11	10	9	8	7	6	5	4	3	2	1	0
Name												PCON				
Type												R/W				
Reset												0				

The register is for global configuration of Image Resizer.

PCON The register bit specifies if pixel-based resizing continues whenever an image finishes processing. Once continuous run for pixel-based resizing is enabled and pixel-based resizing is running, the only way to stop is to reset Capture Resize. If to stop immediately is desired, reset Capture Resize directly. If the last image is desired, set the register bit to '0' first. Then wait until image resizer is not busy again. Finally reset image resizer.

0 Single run

1 Continuous run

聯發機密不得洩漏

RESZ+0004h Image Resizer Control Register RESZ_CON

Bit	31	30	29	28	27	26	25	24	23	22	21	20	19	18	17	16
Name													OUTRST	PELVRRST	PELHRRST	
Type													R/W	R/W	R/W	
Reset													0	0	0	
Bit	15	14	13	12	11	10	9	8	7	6	5	4	3	2	1	0
Name													OUTENA	PELVRENA	PELHRENA	
Type													R/W	R/W	R/W	
Reset													0	0	0	

MTK CONFIDENTIAL
NO DISCLOSURE

The register is for global control of Image Resizer. **Furthermore, software reset will NOT reset all register setting. Remember trigger Image Resizer first before trigger image sources to Image Resizer.**

PELHRENA Writing '1' to the register bit will cause pixel-based fine horizontal resizing proceed to work. However, if horizontal resizing is not necessary, donot write '1' to the register bit.

PELVRENA Writing '1' to the register bit will cause pixel-based fine vertical resizing proceed to work. However, if vertical resizing is not necessary, donot write '1' to the register bit.

OUTENA Writing '1' to the register bit will cause Output proceed to work.

PELHRRST Writing '1' to the register will cause pixel-based fine horizontal resizing to stop immediately and have pixel-based fine horizontal resizing keep in reset state. In order to have pixel-based fine horizontal resizing go to normal state, writing '0' to the register bit.

PELVRRST Writing '1' to the register will pixel-based fine vertical resizing to stop immediately and have pixel-based fine vertical resizing keep in reset state. In order to have pixel-based fine vertical resizing go to normal state, writing '0' to the register bit.

OUTRST Writing '1' to the register will force Output to GMC to stop immediately and have Output keep in reset state. In order to have Output go to normal state, writing '0' to the register bit.

MTK

RESZ+0008h Image Resizer Status Register RESZ_STA

Bit	31	30	29	28	27	26	25	24	23	22	21	20	19	18	17	16
Name																
Type																
Reset																
Bit	15	14	13	12	11	10	9	8	7	6	5	4	3	2	1	0
Name										FRMSTALL	WMFULL	PELOVRUN	OUTBUSY	PELVRBUSY	PELHRBUSY	
Type													RO	RO	RO	
Reset													0	0	0	

The register indicates global status of Image Resizer.

PELHRBUSY Pixel-based HR (Horizontal Resizing) Busy Status

PELVRBUSY Pixel-based VR (Vertical Resizing) Busy Status

OUTBUSY Output Busy Status

PELOVRUN Pixel over run (Camera request but resizer not ack)

WMFULL Working memory full

FRMSTALL Working memory not empty when new frame arrives

RESZ+000Ch Image Resizer Interrupt Register RESZ_INT

Bit	31	30	29	28	27	26	25	24	23	22	21	20	19	18	17	16
Name																
Type																
Reset																
Bit	15	14	13	12	11	10	9	8	7	6	5	4	3	2	1	0
Name													Y2RINT	PELVRINT	PELHRINT	
Type													RC	RC	RC	
Reset													0	0	0	

The register shows up the interrupt status of resizer.

PELHRINT Interrupt for PELHR (Pixel-based Horizontal Resizing). No matter the register bit RESZ_FRCFG.HRINTEN is enabled or not, the register bit will be active whenever PELHR completes. It could be as software interrupt by polling the register bit. Clear it by reading the register.

PELVRINT Interrupt for PELVR (Pixel -based Vertical Resizing). No matter the register bit RESZ_FRCFG.VRINTEN is enabled or not, the register bit will be active whenever PELVR completes. It could be as software interrupt by polling the register bit. Clear it by reading the register.

OUTINT Interrupt for Output to GMC. No matter the register bit RESZ_YUV2RGB.INTEN is enabled or not, the register bit will be active whenever interrupt for completeness of Output to GMC of an image is active. It could be as software interrupt by polling the register bit. Clear it by reading the register.

RESZ+0010h Image Resizer Source Image Size Register 1 RESZ_SRCSZ1

Bit	31	30	29	28	27	26	25	24	23	22	21	20	19	18	17	16
Name	HS															
Type	R/W															
Bit	15	14	13	12	11	10	9	8	7	6	5	4	3	2	1	0
Name	WS															
Type	R/W															

The register specifies the size of source image after coarse shrink process. **The allowable maximum size is 2047x2047**.

WS The register field specifies the width of source image after coarse shrink process.

1 The width of source image after coarse shrink process is 1.

MTK Confidential A (保密)
MTK CONFIDENTIAL
NO DISCLOSURE

2 The width of source image is 2.

…

MTK Confidential A (機密)

HS The register field specifies the height of source image after coarse shrink process.

1 The height of source image after coarse shrink process is 1.

2 The height of source image after coarse shrink process is 2.

…

RESZ+0014h Image Resizer Target Image Size Register 1 RESZ_TARSZ1

Bit	31	30	29	28	27	26	25	24	23	22	21	20	19	18	17	16
Name	HT															
Type	R/W															
Bit	15	14	13	12	11	10	9	8	7	6	5	4	3	2	1	0
Name	WT															
Type	R/W															

The register specifies the size of target image. **The allowable maximum size is 2047x2047.**

WT The register field specifies the width of target image.

1 The width of target image is 1.

2 The width of target image is 2.

…

HT The register field specifies the height of target image.

1 The height of target image is 1.

2 The height of target image is 2.

…

Note: WT and HT must be even number when YUV420 mode is selected. WT must be even number when RGB565 mode is selected.

聯發機密不得洩漏

RESZ+0018h Image Resizer Horizontal Ratio Register RESZ_HRATIO1

Bit	31	30	29	28	27	26	25	24	23	22	21	20	19	18	17	16
Name	RATIO [31:16]															
Type	R/W															
Bit	15	14	13	12	11	10	9	8	7	6	5	4	3	2	1	0
Name	RATIO [15:0]															
Type	R/W															

MTK CONFIDENTIAL

The register specifies horizontal resizing ratio. It is obtained by RESZ_SRCSZ.WS * 2^{17} / RESZ_TARSZ.WT.

NO DISCLOSURE

RESZ+001Ch Image Resizer Vertical Ratio Register 1 RESZ_VRATIO1

Bit	31	30	29	28	27	26	25	24	23	22	21	20	19	18	17	16
Name	RATIO [31:16]															
Type	R/W															
Bit	15	14	13	12	11	10	9	8	7	6	5	4	3	2	1	0
Name	RATIO [15:0]															
Type	R/W															

The register specifies vertical resizing ratio. It is obtained by RESZ_SRCSZ.HS * 2^{17} / RESZ_TARSZ.HT.

RESZ+0020h Image Resizer Horizontal Residual Register 1 RESZ_HRES1

Bit	31	30	29	28	27	26	25	24	23	22	21	20	19	18	17	16
Name																
Type																
Bit	15	14	13	12	11	10	9	8	7	6	5	4	3	2	1	0
Name	RESIDUAL															
Type	R/W															

The register specifies horizontal residual. It is obtained by RESZ_SRCSZ.WS % RESZ_TARSZ.WT The allowable maximum value is 2046.

MTK Confidential A (機密)

RESZ+0024h Image Resizer Vertical Residual Register 1 RESZ_VRES1

Bit	31	30	29	28	27	26	25	24	23	22	21	20	19	18	17	16
Name																
Type																
Bit	15	14	13	12	11	10	9	8	7	6	5	4	3	2	1	0
Name	RESIDUAL															
Type	R/W															

The register specifies vertical residual. It is obtained by RESZ_SRCSZ.HS % RESZ_TARSZ.HT. The allowable maximum value is 2046.

RESZ+0040h Image Resizer Fine Resizing Configuration Register RESZ_FRCFG

Bit	31	30	29	28	27	26	25	24	23	22	21	20	19	18	17	16
Name							WMSZ									
Type							R/W									
Bit	15	14	13	12	11	10	9	8	7	6	5	4	3	2	1	0
Name							PCSF1				VRINTEN	HRINTEN			AVG	VRSS
Type							R/W				R/W	R/W			R/W	R/W
Reset							00				0	0			0	0

The register specifies various setting of control for fine resizing, including of horizontal and vertical resizing. **Note that all parameters must be set before horizontal and vertical resizing proceeds.**

VRSS The register bit specifies whether subsampling for vertical resizing is enabled. For throughput issue, vertical resizing may be simplified by subsampling lines vertically. The register bit is only valid in pixel-based mode.

- **0** Subsampling for vertical resizing is disabled.
- **1** Subsampling for vertical resizing is enabled.

AVG Average if src/tar = 1/n

- **0** Average is disabled.
- **1** Average is enabled.

HRINTEN HR (Horizontal Resizing) Interrupt Enable. When interrupt for HR is enabled, interrupt will arise whenever HR finishes.

- **0** Interrupt for HR is disabled.
- **1** Interrupt for HR is enabled.

VRINTEN VR (Vertical Resizing) Interrupt Enable. When interrupt for VR is enabled, interrupt will arise whenever VR finishes.

- **0** Interrupt for VR is disabled.
- **1** Interrupt for VR is enabled.

PCSF1 Coarse Shrinking Factor 1 for pixel-based resizing. **Only horizontal coarse shrinking is supported for pixel-based resizing**.

- **00** No coarse shrinking.
- **01** Image width becomes 1/2 of original size after coarse shrink pass.
- **10** Image width becomes 1/4 of original size after coarse shrink pass.
- **11** Image width becomes 1/8 of original size after coarse shrink pass.

聯發機密不得洩漏
MTK CONFIDENTIAL
NO DISCLOSURE
IWIT

WMSZ It stands for Working Memory SiZe. The register specifies how many lines after horizontal resizing can be filled into working memory. If dual line buffer is used, horizontal resizing and vertical resizing can execute parallel. **Its minimum value is 4.** MTK Confidential A (機密)

- **4** Working memory for each color component in block-based mode is 4.
- **5** Working memory for each color component in block-based mode is 5.
- **6** Working memory for each color component in block-based mode is 6.
- **7** Working memory for each color component in block-based mode is 7.
- **…**

RESZ+005Ch Image Resizer Pixel-Based Resizing Working Memory Base Address Register RESZ_PRWMBASE

Bit	31	30	29	28	27	26	25	24	23	22	21	20	19	18	17	16
Name	PRWMBASE [31:16]															
Type	R/W															
Bit	15	14	13	12	11	10	9	8	7	6	5	4	3	2	1	0
Name	PRWMBASE [15:0]															
Type	R/W															

The register specifies the base address of working memory in pixel-based resizing mode. It must be byte-aligned.

RESZ+0080h Image Resizer YUV2RGB Configuration Register RESZ_YUV2RGB

Bit	31	30	29	28	27	26	25	24	23	22	21	20	19	18	17	16
Name																
Type																
Reset																
Bit	15	14	13	12	11	10	9	8	7	6	5	4	3	2	1	0
Name	INTEN															MODE
Type	R/W															R/W
Reset	0															0

The register specifies various setting of control for YUV2RGB. **Note that ALL parameters must be set before writing '1' to the register bit RESZ_CONN.YUV2RGBENA**.

INTEN Interrupt Enable. When interrupt for YUV2RGB is enabled, interrupt will arise whenever YUV2RGB finishes.

- **0** Interrupt for YUV2RGB is disabled.
- **1** Interrupt for YUV2RGB is enabled.

MODE Output mode.

- **0** RGB565 output.
- **1** YUV420 output.

RESZ+0084h Image Resizer Target Memory Base Address Register RESZ_TMBASE1

Bit	31	30	29	28	27	26	25	24	23	22	21	20	19	18	17	16
Name	TMBASE1 [31:16]															
Type	R/W															
Bit	15	14	13	12	11	10	9	8	7	6	5	4	3	2	1	0
Name	TMBASE1 [15:1]															
Type	R/W															

The register specifies the base address of target memory for RGB565 mode. Target memory is memory space for destination of YUV2RGB. It' must be half-word (2 bytes) aligned. RESZ_TMBASE1 and RESZ_TMBASE2 are

MTK CONFIDENTIAL NO DISCLOSURE

auto-switched by hardware, so both two registers should be filled. If dual buffer is not required, please fill these two registers with the same value.

MTK Confidential A (機密)

RESZ+0088h Image Resizer Target Memory Base Address Register RESZ_TMBASE2

Bit	31	30	29	28	27	26	25	24	23	22	21	20	19	18	17	16
Name	TMBASE2 [31:16]															
Type	R/W															
Bit	15	14	13	12	11	10	9	8	7	6	5	4	3	2	1	0
Name	TMBASE2 [15:1]															
Type	R/W															

The register specifies the base address of target memory for RGB565 mode. Target memory is memory space for destination of YUV2RGB. It' must be half-word (2 bytes) aligned. RESZ_TMBASE1 and RESZ_TMBASE2 are auto-switched by hardware, so both two registers should be filled. If dual buffer is not required, please fill these two registers with the same value.

RESZ+0090h Image Resizer Debug Configuration Register RESZ_DBGCFG

Bit	31	30	29	28	27	26	25	24	23	22	21	20	19	18	17	16
Name	AUTORSTWIDTH															
Type	R/W															
Reset	0															
Bit	15	14	13	12	11	10	9	8	7	6	5	4	3	2	1	0
Name				AUTO RST	NODB	PHR1	PVR1									
Type				R/W	R/W	R/W	R/W									
Reset				0	0	0	1									

The register is used to help debug.

AUTORSTWIDTH Pulse-width of auto reset signal

AUTORST Enable auto reset mechanism

- **0** Disable auto reset
- **1** Enable auto reset, image resizer will auto reset and restart when new frame comes while previous frame not completed yet.

NODB Force register not double buffered

- **0** No double buffered,
- **1** Double buffered, registers are effective when vsync arrives or RESZ_CON.ena is set to 1.

PVR1 Force vertical resizing to execute even though it's not necessary.

- **0** Normal operation
- **1** Force vertical resizing to execute even though it's not necessary.

PHR1 Force horizontal resizing to execute even though it's not necessary.

- **0** Normal operation
- **1** Force horizontal resizing to execute even though it's not necessary.

RESZ+00B0h Image Resizer Information Register 0 RESZ_INFO0

Bit	31	30	29	28	27	26	25	24	23	22	21	20	19	18	17	16
Name	INFO[31:16]															
Type	RO															
Bit	15	14	13	12	11	10	9	8	7	6	5	4	3	2	1	0
Name	INFO[15:0]															
Type	RO															

The register shows the max working memory really used

MTK CONFIDENTIAL NO DISCLOSURE

INFO[15:00] max working memory counter

RESZ+00B8 Image Resizer Information Register 2 RESZ_INFO2

Bit	31	30	29	28	27	26	25	24	23	22	21	20	19	18	17	16
Name	INFO[31:16]															
Type	RO															
Bit	15	14	13	12	11	10	9	8	7	6	5	4	3	2	1	0
Name	INFO[15:0]															
Type	RO															

The register shows progress of pixels received from BLKCS in fine resizing stage.

INFO[31:16] Indicate the account of vertical lines received from BLKCS in fine resizing stage.

INFO[15:00] Indicate the account of horizontal pixels received from BLKCS in fine resizing stage. Note that it will become zero when resizing completes.

RESZ+00BC Image Resizer Information Register 3 RESZ_INFO3

Bit	31	30	29	28	27	26	25	24	23	22	21	20	19	18	17	16
Name	INFO[31:16]															
Type	RO															
Bit	15	14	13	12	11	10	9	8	7	6	5	4	3	2	1	0
Name	INFO[15:0]															
Type	RO															

The register shows progress of horizontal resizing in fine resizing stage.

INFO[31:16] Indicate the account of horizontal resizing in fine resizing stage in horizontal direction.

INFO[15:00] Indicate the account of horizontal resizing in fine resizing stage in vertical direction.

RESZ+00C0 Image Resizer Information Register 4 RESZ_INFO4

Bit	31	30	29	28	27	26	25	24	23	22	21	20	19	18	17	16
Name	INFO[31:16]															
Type	RO															
Bit	15	14	13	12	11	10	9	8	7	6	5	4	3	2	1	0
Name	INFO[15:0]															
Type	RO															

The register shows progress of vertical resizing in fine resizing stage.

INFO[31:16] Indicate the account of vertical resizing in fine resizing stage in horizontal direction.

INFO[15:00] Indicate the account of vertical resizing in fine resizing stage in vertical direction.

RESZ+00C4 Image Resizer Information Register 5 RESZ_INFO5

Bit	31	30	29	28	27	26	25	24	23	22	21	20	19	18	17	16
Name	INFO[31:16]															
Type	RO															
Bit	15	14	13	12	11	10	9	8	7	6	5	4	3	2	1	0
Name	INFO[15:0]															
Type	RO															

The register shows progress of YUV-to-RGB

INFO[31:16] Indicate YUV-to-RGB in horizontal direction.

INFO[15:00] Indicate YUV-to-RGB in vertical direction.

IWIT 聯發機密不得洩漏 MTK CONFIDENTIAL NO DISCLOSURE IWIT

RESZ+00D0h Image Resizer YUV420 Y-Component Target Memory Base Address Register RESZ_TMBASE_Y

MTK Confidential A (機密)

Bit	31	30	29	28	27	26	25	24	23	22	21	20	19	18	17	16
Name	TMBASE_Y[31:16]															
Type	R/W															
Bit	15	14	13	12	11	10	9	8	7	6	5	4	3	2	1	0
Name	TMBASE_Y[15:2]															
Type	R/W															

The register specifies the base address of YUV420 output for Y-component. It should be word-aligned. It's only useful in YUV420 mode.

RESZ+00D4h Image Resizer YUV420 U-Component Target Memory Base Address Register RESZ_TMBASE_U

Bit	31	30	29	28	27	26	25	24	23	22	21	20	19	18	17	16
Name	TMBASE_U[31:16]															
Type	R/W															
Bit	15	14	13	12	11	10	9	8	7	6	5	4	3	2	1	0
Name	TMBASE_U[15:2]															
Type	R/W															

The register specifies the base address of YUV420 output for U-component. It should be word-aligned. It's only useful in YUV420 mode.

RESZ+00D8h Image Resizer YUV420 V-Component Target Memory Base Address Register RESZ_TMBASE_V

Bit	31	30	29	28	27	26	25	24	23	22	21	20	19	18	17	16
Name	TMBASE_V[31:16]															
Type	R/W															
Bit	15	14	13	12	11	10	9	8	7	6	5	4	3	2	1	0
Name	TMBASE_V[15:2]															
Type	R/W															

The register specifies the base address of YUV420 output for V-component. It should be word-aligned. It's only useful in YUV420 mode.

聯發機密不得洩漏
MTK CONFIDENTIAL
NO DISCLOSURE
IWIT
IWIT

6.2.5 Application Notes

- Working memory. Maximum value is 1023 and minimum 4. **Remember that each pixel occupies 2 bytes**. Thus minimum requirement for working memory in pixel-based resizing is (pixel number in a line)x2x4 bytes.
- Configuration procedure for block-based image sources

```
RESZ_CFG = 0x10 (continuous), 0x0 (single run);
RESZ_TMBASE1 = target memory 1 base address;
RESZ_TMBASE2 = target memory 2 base address;
RESZ_TMBASE_Y = target memory for Y base address (YUV420 mode);
RESZ_TMBASE_U = target memory for U base address (YUV420 mode);
RESZ_TMBASE_V = target memory for V base address (YUV420 mode);
RESZ_SRCSZ = source image size;
RESZ_TARSZ = target image size;
RESZ_HRATIO = horizontal ratio;
RESZ_VRATIO = vertical ratio;
RESZ_HRES = horizontal residual;
RESZ_VRES = vertical residual;
```

```
RESZ_FRCFG = working memory size, interrupt enable;
RESZ_PRWMBASE = working memory base;
RESZ_YUV2RGB = Output mode select, interrupt enable;
RESZ_CON = 0xf;
```

MTK Confidential A (機密)

6.3 NAND FLASH interface

6.3.1 General description

MT6225 provides NAND flash interface.

The NAND FLASH interface support features as follows:

- ECC (Hamming code) acceleration capable of one-bit error correction or two bits error detection.
- Programmable ECC block size. Support 1, 2 or 4 ECC block within a page.
- Word/byte access through APB bus.
- Direct Memory Access for massive data transfer.
- Latch sensitive interrupt to indicate ready state for read, program, erase operation and error report.
- Programmable wait states, command/address setup and hold time, read enable hold time, and write enable recovery time.
- Support page size: 512(528) bytes and 2048(2112) bytes.
- Support 2 chip select for NAND flash parts.
- Support 8/16 bits I/O interface.

聯發機密不得洩漏

The NFI core can automatically generate ECC parity bits when programming or reading the device. If the user approves the way it stores the parity bits in the spare area for each page, the AUTOECC mode can be used. Otherwise, the user can prepare the data (may contains operating system information or ECC parity bits) for the spare area with another arrangement. In the former case, the core can check the parity bits when reading from the device. The ECC module features the hamming code, which is capable of correcting one bit error or detecting two bits error within one ECC block.

MTK CONFIDENTIAL

6.3.2 Register definition

NO DISCLOSURE

NFI+0000h NAND flash access control register NFI_ACCCON

Bit	15	14	13	12	11	10	9	8	7	6	5	4	3	2	1	0
Name	LCD2NAND					C2R			W2R		WH		WST		RLT	
Type	R/W					R/W			R/W		R/W		R/W		R/W	
Reset	0					0			0		0		0		0	

This is the timing access control register for the NAND FLASH interface. In order to accommodate operations for different system clock frequency ranges from 13MHz to 52MHz, wait states and setup/hold time margin can be configured in this register.

C2R The field represents the minimum required time from NCEB low to NREB low.

W2R The field represents the minimum required time from NWEB high to NREB low. It's in unit of 2T. So the actual time ranges from 2T to 8T in step of 2T.

WH Write-enable hold-time.
The field specifies the hold time of NALE, NCLE, NCEB signals relative to the rising edge of NWEB. This

field is associated with **WST** to expand the write cycle time, and is associated with **RLT** to expand the read cycle time.

MTK Confidential A (機密)

RLT Read Latency Time

The field specifies how many wait states to be inserted to meet the requirement of the read access time for the device.

00 No wait state.
01 1T wait state.
10 2T wait state.
11 3T wait state.

WST Write Wait State

The field specifies the wait states to be inserted to meet the requirement of the pulse width of the NWEB signal.

00 No wait state.
01 1T wait state.
10 2T wait state.
11 3T wait state.

LCD2NAND Arbitration Wait State

The field specifies the wait states to be inserted for the APB arbitrator when bus user changes.

NFI +0004h NFI page format control register NFI_PAGEFMT

Bit	15	14	13	12	11	10	9	8	7	6	5	4	3	2	1	0
Name								B16EN	ECCBLKSIZE					ADRMODE	PSIZE	
Type								R/W	R/W					R/W	R/W	
Reset								0	0					0	0	

This register manages the page format of the device. It includes the bus width selection, the page size, the associated address format, and the ECC block size.

B16EN 16 bits I/O bus interface enable.

ECCBLKSIZE ECC block size.

This field represents the size of one ECC block. The hardware-fuelled ECC generation provides 2 or 4 blocks within a single page.

0 ECC block size: 128 bytes. Used for devices with page size equal to 512 bytes.
1 ECC block size: 256 bytes. Used for devices with page size equal to 512 bytes.
2 ECC block size: 512 bytes. Used for devices with page size equal to 512 (1 ECC block) or 2048 bytes (4 ECC blocks).
3 ECC block size: 1048 bytes. Used for devices with page size equal to 2048 bytes.
4~ Reserved.

ADRMODE Address mode. This field specifies the input address format.

0 Normal input address mode, in which the half page identifier is not specified in the address assignment but in the command set. As in **Table 36**, A7 to A0 identifies the byte address within half a page, A12 to A9 specifies the page address within a block, and other bits specify the block address. The mode is used mostly for the device with 512 bytes page size.

1 Large size input address mode, in which all address information is specified in the address assignment rather than in the command set. As in **Table 37**, A11 to A0 identifies the byte address within a page. The mode is used for the device with 2048 bytes page size and 8bits I/O interface.

2 Large size input address mode. As in **Table 37**, A10 to A0 identifies the column address within a page. The mode is used for the device with 2048 byte page size and 16bits I/O interface.

IWIT
聯發機密不得洩漏
MTK CONFIDENTIAL
NO DISCLOSURE
IWIT

	NLD7	NLD6	NLD5	NLD4	NLD3	NLD2	NLD1	NLD0
First cycle	A7	A6	A5	A4	A3	A2	A1	A0
Second cycle	A16	A15	A14	A13	A12	A11	A10	A9

MTK Confidential A (機密)

Table 36 Page address assignment of the first type (ADRMODE = 0)

	NLD7	NLD6	NLD5	NLD4	NLD3	NLD2	NLD1	NLD0
First cycle	A7	A6	A5	A4	A3	A2	A1	A0
Second cycle	0	0	0	0	A11	A10	A9	A8

Table 37 Page address assignment of the second type (ADRMODE = 1 or 2)

PSIZE Page Size.

The field specifies the size of one page for the device. Two most widely used page size are supported.

- **0** The page size is 512 bytes or 528 bytes (including 512 bytes data area and 16 bytes spare area).
- **1** The page size is 2048 bytes or 2112 bytes (including 2048 bytes data area and 64 bytes spare area).
- **2~** Reserved.

NFI +0008h Operation control register NFI_OPCON

Bit	15	14	13	12	11	10	9	8	7	6	5	4	3	2	1	0
Name			NOB					SRD			EWR	ERD			BWR	BRD
Type			W/R					WO			WO	WO			R/W	R/W
Reset			0					0			0	0			0	0

This register controls the burst mode and the single of the data access. In burst mode, the core supposes there are one or more than one page of data to be accessed. On the contrary, in single mode, the core supposes there are only less than 4 bytes of data to be accessed.

聯發機密不得洩漏

BRD *Burst read mode.* Setting this field to be logic-1 enables the data read operation. The NFI core will issue read cycles to retrieve data from the device when the data FIFO is not full or the device is not in the busy state. The NFI core supports consecutive page reading. A page address counter is built in. If the reading reaches to the end of the page, the device will enter the busy state to prepare data of the next page, and the NFI core will automatically pause reading and remain inactive until the device returns to the ready state. The page address counter will restart to count from 0 after the device returns to the ready state and start retrieving data again.

MTK CONFIDENTIAL

BWR *Burst write mode.* Setting to be logic-1 enables the data burst write operation for DMA operation. Actually the NFI core will issue write cycles once if the data FIFO is not empty even without setting this flag. But if DMA is to be utilized, the bit should be enabled. If DMA is not to be utilized, the bit didn't have to be enabled.

NO DISCLOSURE

ERD *ECC read mode.* Setting to be logic-1 initializes the ECC checking and correcting for the current page. The ECC checking is only valid when a full ECC block has been read.

EWR Setting to be logic-1 initializes the ECC parity generation for the current page. The ECC code generation is only valid when a full ECC block has been programmed.

SRD Setting to be logic-1 initializes the one-shot data read operation. It's mainly used for read ID and read status command, which requires no more than 4 read cycles to retrieve data from the device.

NOB The field represents the number of bytes to be retrieved from the device in single mode, and the number of bytes per AHB transaction in both single and burst mode.

- **0** Read 4 bytes from the device.
- **1** Read 1 byte from the device.
- **2** Read 2 bytes from the device.
- **3** Read 3 bytes from the device.

IWIT

NFI +000Ch Command register NFI_CMD

Bit	15	14	13	12	11	10	9	8	7	6	5	4	3	2	1	0
Name									CMD							

Type									R/W
Reset									45

MTK Confidential A (機密)

This is the command input register. The user should write this register to issue a command. Please refer to device datasheet for the command set. The core can issue some associated commands automatically. Please check out register **NFI_CON** for those commands.

CMD Command word.

NFI +0010h Address length register NFI_ADDNOB

Bit	15	14	13	12	11	10	9	8	7	6	5	4	3	2	1	0
Name														ADDR_NOB		
Type														R/W		
Reset														0		

This register represents the number of bytes corresponding to current command. The valid number of bytes ranges from 1 to 5. The address format depends on what device to be used and what commands to be applied. The NFI core is made transparent to those different situations except that the user has to define the number of bytes.
The user should write the target address to the address register **NFI_ADDRL** before programming this register.

ADDR_NOB Number of bytes for the address

NFI +0014h Least significant address register NFI_ADDRL

Bit	31	30	29	28	27	26	25	24	23	22	21	20	19	18	17	16
Name	ADDR3								ADDR2							
Type	R/W								R/W							
Reset	0								0							
Bit	15	14	13	12	11	10	9	8	7	6	5	4	3	2	1	0
Name	ADDR1								ADDR0							
Type	R/W								R/W							
Reset	0								0							

This defines the least significant 4 bytes of the address field to be applied to the device. Since the device bus width is 1 byte, the NFI core arranges the order of address data to be least significant byte first. The user should put the first address byte in the field **ADDR0**, the second byte in the field **ADDR1**, and so on.

ADDR3 The fourth address byte.
ADDR2 The third address byte.
ADDR1 The second address byte.
ADDR0 The first address byte.

NFI +0018h Most significant address register NFI_ADDRM

Bit	15	14	13	12	11	10	9	8	7	6	5	4	3	2	1	0
Name									ADDR4							
Type									R/W							
Reset									0							

This register defines the most significant byte of the address field to be applied to the device. The NFI core supports address size up to 5 bytes. Programming this register implicitly indicates that the number of address field is 5. In this case, the NFI core will automatically set the **ADDR_NOB** to 5.

ADDR4 The fifth address byte.

NFI +001Ch Write data buffer NFI_DATAW

Bit	31	30	29	28	27	26	25	24	23	22	21	20	19	18	17	16
Name	DW3								DW2							
Type	R/W								R/W							
Reset	0								0							

IWIT 聯發機密不得洩漏 MTK CONFIDENTIAL NO DISCLOSURE IWIT

Bit	15	14	13	12	11	10	9	8	7	6	5	4	3	2	1	0
Name	DW1								DW0							
Type	R/W								R/W							
Reset	0								0							

MTK Confidential A (機密)

This is the write port of the data FIFO. It supports word access. The least significant byte **DW0** is to be programmed to the device first, then **DW1**, and so on.

If the data to be programmed is not word aligned, byte write access will be needed. Instead, the user should use another register **NFI_DATAWB** for byte programming. Writing a word to **NFI_DATAW** is equivalent to writing four bytes **DW0**, **DW1**, **DW2**, **DW3** in order to **NFI_DATAWB**. Be reminded that the word alignment is from the perspective of the user. The device bus is byte-wide. According to the flash's nature, the page address will wrap around once it reaches the end of the page.

DW3 Write data byte 3.
DW2 Write data byte 2.
DW1 Write data byte 1.
DW0 Write data byte 0.

NFI +0020h Write data buffer for byte access NFI_DATAWB

Bit	15	14	13	12	11	10	9	8	7	6	5	4	3	2	1	0
Name									DW0							
Type									R/W							
Reset									0							

This is the write port for the data FIFO for byte access.

DW0 Write data byte.

聯發機密不得洩漏

NFI +0024h Read data buffer NFI_DATAR

Bit	31	30	29	28	27	26	25	24	23	22	21	20	19	18	17	16
Name	DR3								DR2							
Type	RO								RO							
Reset	0								0							
Bit	15	14	13	12	11	10	9	8	7	6	5	4	3	2	1	0
Name	DR1								DR0							
Type	RO								RO							
Reset	0								0							

MTK CONFIDENTIAL

This is the read port of the data FIFO. It supports word access. The least significant byte **DR0** is the first byte read from the device, then **DR1**, and so on.

NO DISCLOSURE

DR3 Read data byte 3.
DR2 Read data byte 2.
DR1 Read data byte 1.
DR0 Read data byte 0.

NFI +0028h Read data buffer for byte access NFI_DATARB

Bit	15	14	13	12	11	10	9	8	7	6	5	4	3	2	1	0
Name									DR0							
Type									RO							
Reset									0							

This is the read port of the data FIFO for byte access.

NFI +002Ch NFI status NFI_PSTA

Bit	15	14	13	12	11	10	9	8	7	6	5	4	3	2	1	0

Name								BUSY					DATAW	DATAR	ADDR	CMD
Type								RO					R/W	R/W	R/W	R/W
Reset								0*					0	0	0	0

MTK Confidential A (機密)

This register represents the NFI core control status including command mode, address mode, data program and read mode. The user should poll this register for the end of those operations.

*The value of **BUSY** bit depends on the GPIO configuration. If GPIO is configured for NAND flash application, the reset value should be 0, which represents that NAND flash is in idle status. When the NAND flash is busy, the value will be 1.

BUSY Synchronized busy signal from the NAND flash. It's read-only.
DATAW The NFI core is in data write mode.
DATAR The NFI core is in data read mode.
ADDR The NFI core is in address mode.
CMD The NFI core is in command mode.

NFI +0030h FIFO control NFI_FIFOCON

Bit	15	14	13	12	11	10	9	8	7	6	5	4	3	2	1	0
Name											RESET	FLUSH	WR_FULL	WR_EMPTY	RD_FULL	RD_EMPTY
Type											WO	WO	RO	RO	RO	RO
Reset											0	0	0	1	0	1

The register represents the status of the data FIFO.

RESET Reset the state machine and data FIFO.
FLUSH Flush the data FIFO.
WR_FULL Data FIFO full in burst write mode.
WR_EMPTY Data FIFO empty in burst write mode.
RD_FULL Data FIFO full in burst read mode.
RD_EMPTY Data FIFO empty in burst read mode.

驗發機密不得洩漏
MTK CONFIDENTIAL
NO DISCLOSURE
IWIT
IWIT

NFI +0034h NFI control NFI_CON

Bit	15	14	13	12	11	10	9	8	7	6	5	4	3	2	1	0
Name	BYTE_RW				MULTIPAGE_CON	READ_CON	PROGRAM_CON	ERASE_CON			SW_PROGSPARE_EN	MULTI_PAGE_RD_EN	AUTOECC_ENC_EN	AUTOECC_DEC_EN	DMA_WR_EN	DMA_RD_EN
Type	R/W				R/W	R/W	R/W	R/W			R/W	R/W	R/W	R/W	R/W	R/W
Reset	0				0	0	0	0			0	0	0	0	0	0

The register controls the DMA and ECC functions. For all field, Setting to be logic-1 represents enabled, while 0 represents disabled.

BYTE_RW Enable APB byte access.
MULTIPAGE_CON This bit represents that the first-cycle command for read operation (00h) can be automatically performed to read the next page automatically. Automatic ECC decoding flag **AUTOECC_DEC_EN** should also be enabled for multiple page access.
READ_CON This bit represents that the second-cycle command for read operation (30h) can be automatically performed.
PROGRAM_CON This bit represents that the second-cycle command for page program operation (10h) can be automatically performed after the data for the entire page (including the spare area) has been written. It should be associated with automatic ECC encoding mode enabled.

MTK Confidential A (機密)

ERASE_CON The bit represents that the second-cycle command for block erase operation (D0h) can be automatically performed after the block address is latched.

SW_PROGSPARE_EN If enabled, the NFI core allows the user to program or read the spare area directly. Otherwise, the spare area can be programmed or read by the core.

MULTI_PAGE_RD_EN Multiple page burst read enable. If enabled, the burst read operation could continue through multiple pages within a block. It's also possible and more efficient to associate with DMA scheme to read a sector of data contained within the same block.

AUTOECC_ENC_EN Automatic ECC encoding enable. If enabled, the ECC parity is written automatically to the spare area right after the end of the data area. If **SW_PROGSPARE_EN** is set, however, the mode can't be enabled since the core can't access the spare area.

AUTOECC_DEC_EN Automatic ECC decoding enabled, the error checking and correcting are performed automatically on the data read from the memory and vice versa. If enabled, when the page address reaches the end of the data read of one page, additional read cycles will be issued to retrieve the ECC parity-check bits from the spare area to perform checking and correcting.

DMA_WR_EN This field is used to control the activity of DMA write transfer.

DMA_RD_EN This field is used to control the activity of DMA read transfer.

NFI +0038h Interrupt status register NFI_INTR

Bit	15	14	13	12	11	10	9	8	7	6	5	4	3	2	1	0
Name				BUSY_RETURN	ERR_COR3	ERR_COR2	ERR_COR1	ERR_COR0	ERR_DET3	ERR_DET2	ERR_DET1	ERR_DET0	ERASE_COMPLETE	RESET_COMPLETE	WR_COMPLETE	RD_COMPLETE
Type				RC	RC	RC	RC	RC	RC	RC	RC	RC	RC	RC	RC	RC
Reset				0	0	0	0	0	0	0	0	0	0	0	0	0

The register indicates the status of all the interrupt sources. Read this register will clear all interrupts.

BUSY_RETURN Indicates that the device state returns from busy by inspecting the R/B# pin.

ERR_COR3 Indicates that the single bit error in ECC block 3 needs to be corrected.

ERR_COR2 Indicates that the single bit error in ECC block 2 needs to be corrected.

ERR_COR1 Indicates that the single bit error in ECC block 1 needs to be corrected.

ERR_COR0 Indicates that the single bit error in ECC block 0 needs to be corrected.

ERR_DET3 Indicates an uncorrectable error in ECC block 3.

ERR_DET2 Indicates an uncorrectable error in ECC block 2.

ERR_DET1 Indicates an uncorrectable error in ECC block 1.

ERR_DET0 Indicates an uncorrectable error in ECC block 0.

ERASE_COMPLETE Indicates that the erase operation is completed.

RESET_COMPLETE Indicates that the reset operation is completed.

WR_COMPLETE Indicates that the write operation is completed.

RD_COMPLETE Indicates that the single page read operation is completed.

NFI +003Ch Interrupt enable register NFI_INTR_EN

Bit	15	14	13	12	11	10	9	8	7	6	5	4	3	2	1	0
Name	ERR_COR3_EN	ERR_COR2_EN	ERR_COR1_EN		ERR_DET3_EN	ERR_DET2_EN	ERR_DET1_EN			BUSY_RETURN_EN	ERR_COR_EN	ERR_DET_EN	ERASE_COMPLETE_EN	RESET_COMPLETE_EN	WR_COMPLETE_EN	RD_COMPLETE_EN
Type	R/W	R/W	R/W		R/W	R/W	R/W			R/W	R/W	R/W	R/W	R/W	R/W	R/W
Reset	0	0	0		0	0	0			0	0	0	0	0	0	0

This register controls the activity for the interrupt sources.

聯發科技股份有限公司
MTK CONFIDENTIAL
NO DISCLOSURE

ERR_COR1_EN The error correction interrupt enable for the 2nd ECC block.
ERR_COR2_EN The error correction interrupt enable for the 3rd ECC block.
ERR_COR3_EN The error correction interrupt enable for the 4th ECC block.
ERR_DET1_EN The error detection interrupt enable for the 2nd ECC block.
ERR_DET2_EN The error detection interrupt enable for the 3rd ECC block.
ERR_DET3_EN The error detection interrupt enable for the 4th ECC block.
BUSY_RETURN_EN The busy return interrupt enable.
ERR_COR_EN The error correction interrupt enable for the 1st ECC block.
ERR_DET_EN The error detection interrupt enable for the 1st ECC block.
ERASE_COMPLETE_EN The erase completion interrupt enable.
RESET_COMPLETE_EN The reset completion interrupt enable.
WR_COMPLETE_EN The single page write completion interrupt enable.
RD_COMPLETE_EN The single page read completion interrupt enable.

NFI+0040h NAND flash page counter

NFI_PAGECNTR

Bit	15	14	13	12	11	10	9	8	7	6	5	4	3	2	1	0
Name									CNTR							
Type									R/W							
Reset									0							

The register represents the number of pages that the NFI has read since the issuing of the read command. For some devices, the data can be read consecutively through different pages without the need to issue another read command. The user can monitor this register to know current page count, particularly when read DMA is enabled.

CNTR The page counter.

NFI+0044h NAND flash page address counter

NFI_ADDRCNTR

Bit	15	14	13	12	11	10	9	8	7	6	5	4	3	2	1	0
Name									CNTR							
Type									R/W							
Reset									0							

The register represents the current read/write address with respect to initial address input. It counts in unit of byte. In page read and page program operation, the address should be the same as that in the state machine in the target device.

NFI supports the address counter up to 4096 bytes.

CNTR The address count.

NFI +0050h ECC block 0 parity error detect syndrome address

NFI_SYM0_ADDR

Bit	15	14	13	12	11	10	9	8	7	6	5	4	3	2	1	0
Name											SYM					
Type											RO					
Reset											0					

This register identifies the address within ECC block 0 that a single bit error has been detected.

SYM The byte address of the error-correctable bit.

MTK Confidential A (機密)
IWIT
聯發機密不得洩漏
MTK CONFIDENTIAL
NO DISCLOSURE
IWIT

MTK Confidential A (機密)

NFI +0054h ECC block 1 parity error detect syndrome address NFI_SYM1_ADDR

Bit	15	14	13	12	11	10	9	8	7	6	5	4	3	2	1	0
Name							SYM									
Type							RO									
Reset							0									

This register identifies the address within ECC block 1 that a single bit error has been detected.

SYM The byte address of the error-correctable bit.

NFI +0058h ECC block 2 parity error detect syndrome address NFI_SYM2_ADDR

Bit	15	14	13	12	11	10	9	8	7	6	5	4	3	2	1	0
Name							SYM									
Type							RO									
Reset							0									

This register identifies the address within ECC block 2 that a single bit error has been detected.

SYM The byte address of the error-correctable bit.

NFI +005Ch ECC block 3 parity error detect syndrome address NFI_SYM3_ADDR

Bit	15	14	13	12	11	10	9	8	7	6	5	4	3	2	1	0
Name							SYM									
Type							RO									
Reset							0									

This register identifies the address within ECC block 3 that a single bit error has been detected.

SYM The byte address of the error-correctable bit.

NFI +0060h ECC block 0 parity error detect syndrome word NFI_SYM0_DAT

Bit	31	30	29	28	27	26	25	24	23	22	21	20	19	18	17	16
Name	ED3								ED2							
Type	RO								RO							
Reset	0								0							
Bit	15	14	13	12	11	10	9	8	7	6	5	4	3	2	1	0
Name	ED1								ED0							
Type	RO								RO							
Reset	0								0							

This register represents the syndrome word for the corrected ECC block 0. To correct the error, the user should first read **NFI_ SYM0_ADDR** for the address of the correctable word, and then read **NFI_SYM0_DAT**, directly XOR the syndrome word with the data word to obtain the correct word.

NFI +0064h ECC block 1 parity error detect syndrome word NFI_SYM1_DAT

Bit	31	30	29	28	27	26	25	24	23	22	21	20	19	18	17	16
Name	ED3								ED2							
Type	RO								RO							
Reset	0								0							
Bit	15	14	13	12	11	10	9	8	7	6	5	4	3	2	1	0
Name	ED1								ED0							
Type	RO								RO							
Reset	0								0							

IWIT
聯發機密不得洩漏
MTK CONFIDENTIAL
NO DISCLOSURE

This register represents the syndrome word for the corrected ECC block 0. To correct the error, the user should first read **NFI_ SYM1_ADDR** for the address of the correctable word, and then read **NFI_SYM1_DAT**, directly XOR the syndrome word with the data word to obtain the correct word.

MTK Confidential A (機密)

NFI +0068h ECC block 2 parity error detect syndrome word NFI_SYM2_DAT

Bit	31	30	29	28	27	26	25	24	23	22	21	20	19	18	17	16
Name	ED3								ED2							
Type	RO								RO							
Reset	0								0							
Bit	15	14	13	12	11	10	9	8	7	6	5	4	3	2	1	0
Name	ED1								ED0							
Type	RO								RO							
Reset	0								0							

This register represents the syndrome word for the corrected ECC block 0. To correct the error, the user should first read **NFI_ SYM2_ADDR** for the address of the correctable word, and then read **NFI_SYM2_DAT**, directly XOR the syndrome word with the data word to obtain the correct word.

NFI +006Ch ECC block 3 parity error detect syndrome word NFI_SYM3_DAT

Bit	31	30	29	28	27	26	25	24	23	22	21	20	19	18	17	16
Name	ED3								ED2							
Type	RO								RO							
Reset	0								0							
Bit	15	14	13	12	11	10	9	8	7	6	5	4	3	2	1	0
Name	ED1								ED0							
Type	RO								RO							
Reset	0								0							

This register represents the syndrome word for the corrected ECC block 0. To correct the error, the user should first read **NFI_ SYM3_ADDR** for the address of the correctable word, and then read **NFI_SYM3_DAT**, directly XOR the syndrome word with the data word to obtain the correct word.\

NFI +0070h NFI ECC error detect indication register NFI_ERRDET

Bit	15	14	13	12	11	10	9	8	7	6	5	4	3	2	1	0
Name													EBLK3	EBLK2	EBLK1	EBLK0
Type													RO	RO	RO	RO
Reset													0	0	0	0

This register identifies the block in which an uncorrectable error has been detected.

NFI +0080h NFI ECC parity word 0 NFI_PAR0

Bit	15	14	13	12	11	10	9	8	7	6	5	4	3	2	1	0
Name				PAR												
Type				RO												
Reset				0												

This register represents the ECC parity for the ECC block 0. It's calculated by the NFI core and can be read by the user. It's generated when writing or reading a page.

Register Address	Register Function	Acronym
NFI +0080h	NFI ECC parity word 0	NFI_PAR0
NFI +0084h	NFI ECC parity word 1	NFI_PAR1
NFI +0088h	NFI ECC parity word 2	NFI_PAR2

IWIT
聯發機密不得洩漏
MTK CONFIDENTIAL
NO DISCLOSURE
IWIT

NFI +008Ch	NFI ECC parity word 3	NFI_PAR3
NFI +0090h	NFI ECC parity word 4	NFI_PAR4
NFI +0094h	NFI ECC parity word 5	NFI_PAR5
NFI +0098h	NFI ECC parity word 6	NFI_PAR6
NFI +009Ch	NFI ECC parity word 7	NFI_PAR7

MTK Confidential A (機密)

Table 38 NFI parity bits register table

IWIT

NFI+0100h NFI device select register NFI_CSEL

Bit	15	14	13	12	11	10	9	8	7	6	5	4	3	2	1	0
Name																CSEL
Type																R/W
Reset																0

The register is used to select the target device. It decides which CEB pin to be functional. This is useful while using the high-density device.

CSEL Chip select. The value defaults to 0.

- **0** Device 1 is selected.
- **1** Device 2 is selected.

6.3.3 Device programming sequence

This section lists the program sequences to successfully use any compliant devices.

聯發機密不得洩漏

For block erase

1. Enable erase complete interrupt (NFI_INTR_EN = 8h).
2. Write command (NFI_CMD = 60h).
3. Write block address (NFI_ADDR).
4. Set the number of address bytes (NFI_ADDRNOB).
5. Check program status (NFI_PSTA) to see whether the operation has been completed. Omitted if ERASE_CON has been set.
6. Write command (NFI_CMD = D0h). Omitted if ERASE_CON has been set.
7. Check the erase complete interrupt.

MTK CONFIDENTIAL
NO DISCLOSURE

For status read

1. Write command (NFI_CMD = 70h).
2. Set single word read for 1 byte (NFI_OPCON = 1100h).
3. Check program status (NFI_PSTA) to see whether the operation has been completed.
4. Read single byte (NFI_DATAR).

For page program

IWIT

1. Enable write complete interrupt (NFI_INTR_EN = 2h).
2. Set DMA mode, and hardware ECC mode (NFI_CON = Ah).
3. Write command (NFI_CMD = 80h).
4. Write page address (NFI_ADDR).

5. Set the number of address bytes (NFI_ADDRNOB).
6. Set burst write (NFI_OPCON = 2h).
7. In DMA mode, the signal DMA_REQ controls the access. The user can also check the status of the FIFO (NFI_FIFOCON) and write a pre-specified number of data whenever the FIFO is not full and until the end of page is reached.
8. Check program status (NFI_PSTA) to see whether all operation has been completed.
9. Set ECC parities write. Omitted if hardware ECC mode has been set.
10. Check program status (NFI_PSTA) to see whether the above operation has been completed.
11. Write command (NFI_CMD = 10h). Omitted if PROGRAM_CON has been set.
12. Check the program complete interrupt.

<u>For page read</u>

1. Enable busy ready, read complete, ECC correct indicator, and ECC error indicator interrupt. (NFI_INTR_EN = 41h).
2. Set DMA mode, and hardware ECC mode. (NFI_CON = 5h).
3. Write command (NFI_CMD = 00h).
4. Write page address (NFI_ADDR).
5. Set the number of address bytes (NFI_ADDRNOB).
6. Check busy ready interrupt.
7. Set burst read (NFI_OPCON = 1h).
8. In DMA mode, the signal DMA_REQ controls the access. The user can also check the status of the FIFO (NFI_FIFOCON) and read a pre-specified number of data whenever the FIFO is not empty and until the end of page is reached.
9. Set ECC parities check. Omitted if hardware ECC mode has been set.
10. Check program status (NFI_PSTA) or check ECC correct and error interrupt.
11. Read the ECC correction or error information.

MTK Confidential A (機密)
IWIT
聯發機密不得洩漏
MTK CONFIDENTIAL
NO DISCLOSURE
IWIT

6.3.4 Device timing control

This section illustrates the timing diagram.

The ideal timing for write access is listed as listed in **Table 39**.

Parameter	Description	Timing specification	Timing at 13MHz (WST, WH) = (0,0)	Timing at 26MHz (WST, WH) = (0,0)	Timing at 52MHz (WST, WH) = (1,0)
T_{WC1}	*Write cycle time*	3T + WST + WH	230.8ns	105.4ns	76.9ns
T_{WC2}	*Write cycle time*	2T + WST + WH	153.9ns	76.9ns	57.7ns
T_{DS}	*Write data setup time*	1T + WST	76.9ns	38.5ns	38.5ns
T_{DH}	*Write data hold time*	1T + WH	76.9ns	38.5ns	19.2ns
T_{WP}	*Write enable time*	1T + WST	76.9ns	38.5ns	38.5ns
T_{WH}	*Write high time*	1T + WH	76.9ns	38.5ns	19.2ns
T_{CLS}	*Command latch enable setup time*	1T	76.9ns	38.5ns	19.2ns

T_{CLH}	*Command latch enable hold time*	1T + WH	76.9ns	38.5ns	19.2ns
T_{ALS}	*Address latch enable setup time*	1T	76.9ns	38.5ns	19.2ns
T_{ALH}	*Address latch enable hold time*	1T + WH	76.9ns	38.5ns	19.23ns
F_{WC}	*Write data rate*	1 / T_{WC2}	6.5Mbytes/s	13Mbytes/s	17.3Mbytes/s

MTK Confidential A (機密)

Table 39 Write access timing

IWIT

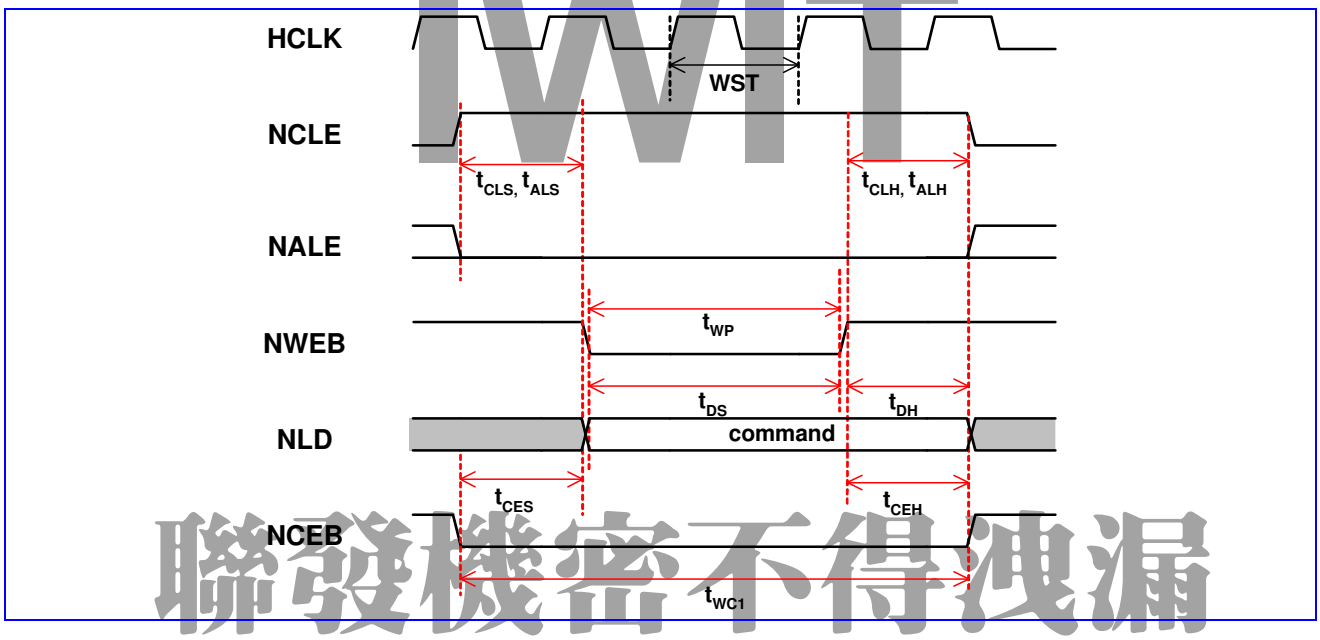

聯發機密不得洩漏

Figure 59 Command input cycle (1 wait state).

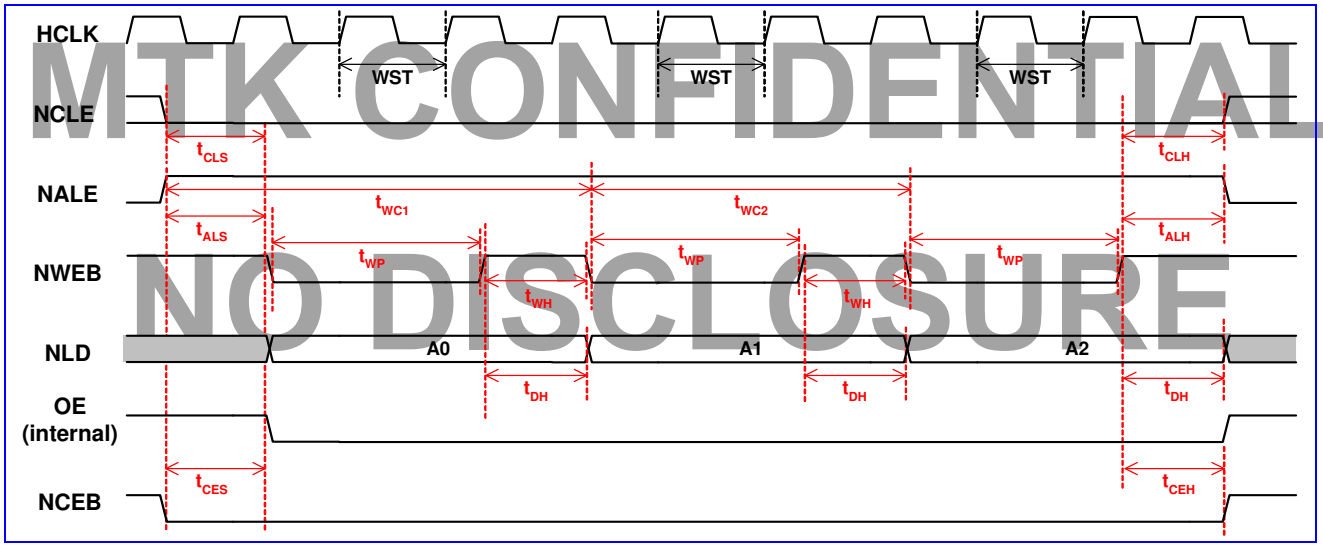

MTK CONFIDENTIAL
NO DISCLOSURE

Figure 60 Address input cycle (1 wait state)

IWIT

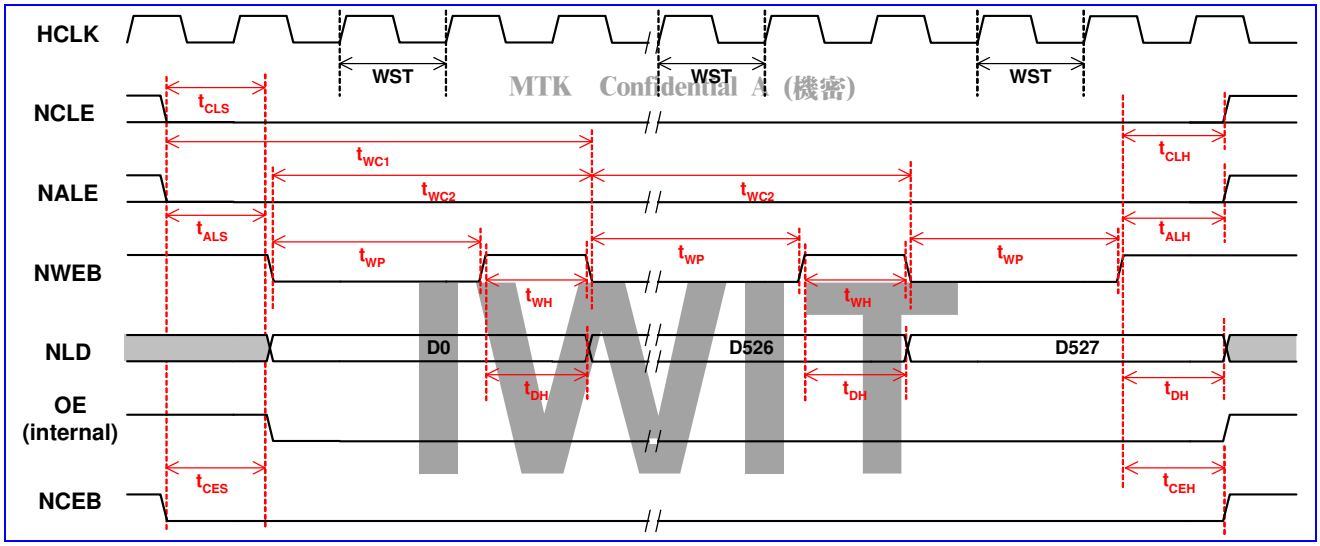

Figure 61 Consecutive data write cycles (1 wait state, 0 hold time extension)

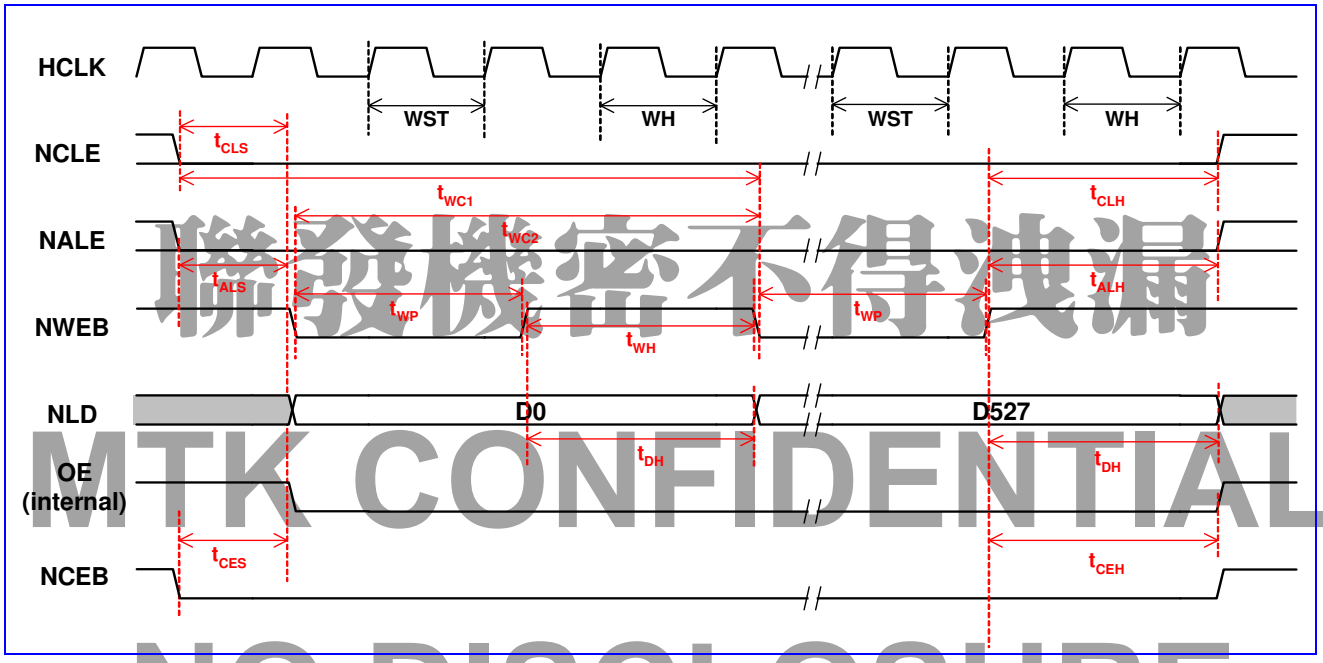

Figure 62 Consecutive data write cycles (1 wait state, 1 hold time extension)

The ideal timing for read access is as listed in Table 28.

Parameter	Description	Timing specification	Timing at 13MHz (RLT, WH) = (0,0)	Timing at 26MHz (RLT, WH) = (1,0)	Timing at 52MHz (RLT, WH) = (2,0)
T_{RC1}	*Read cycle time*	3T + RLT + WH	230.8ns	153.8ns	96.2ns
T_{RC2}	*Read cycle time*	2T + RLT + WH	153.9ns	115.4ns	76.9ns
T_{DS}	*Read data setup time*	1T + RLT	76.9ns	76.9ns	57.7ns
T_{DH}	*Read data hold time*	1T + WH	76.9ns	38.5ns	19.2ns
T_{RP}	*Read enable time*	1T + RLT	76.9ns	76.9ns	57.7ns
T_{RH}	*Read high time*	1T + WH	76.9ns	38.5ns	19.2ns
T_{CLS}	*Command latch enable setup time*	1T	76.9ns	38.5ns	19.2ns
T_{CLH}	*Command latch enable hold time*	1T + WH	76.9ns	38.5ns	19.2ns

MTK Confidential A (機密)
聯發機密不得洩漏
MTK CONFIDENTIAL
NO DISCLOSURE

T_{ALS}	*Address latch enable setup time*	1T	76.9ns	38.5ns	19.2ns
T_{ALH}	*Address latch enable hold time*	1T + WH	76.9ns	38.5ns	19.2ns
F_{RC}	*Write data rate*	1 / T_{RC2}	6.5Mbytes/s	8.7Mbytes/s	13Mbytes/s

MTK Confidential A (機密)

Table 40 Read access timing

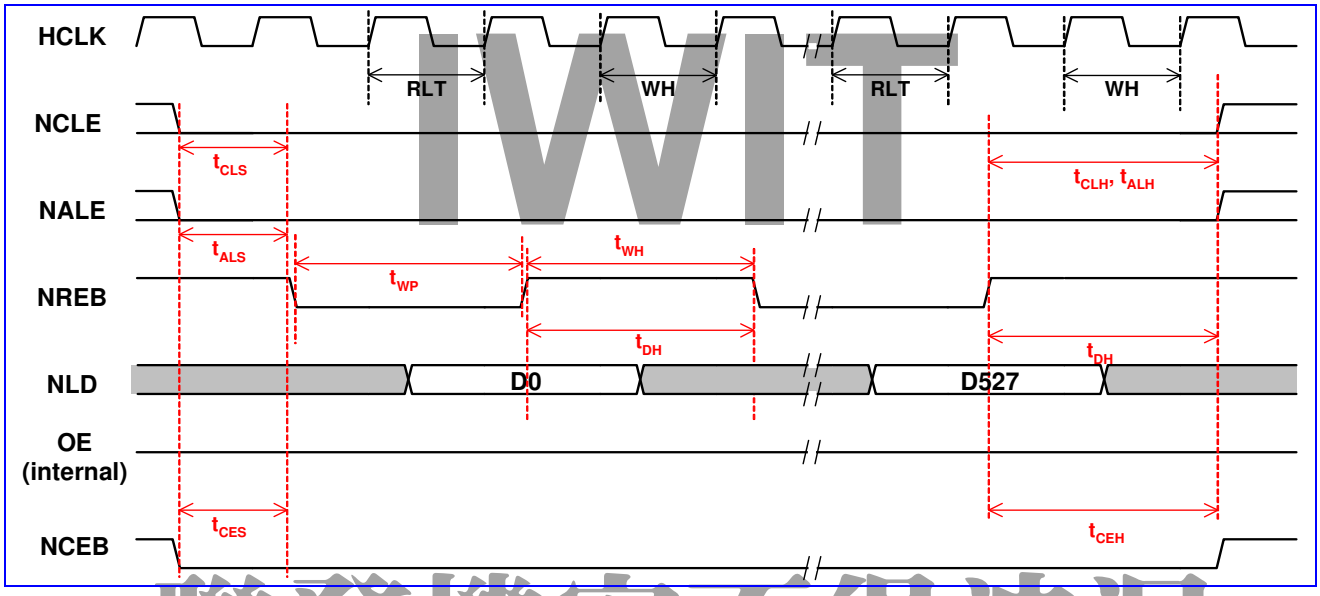

Figure 63 Serial read cycle (1 wait state, 1 hold time extension)

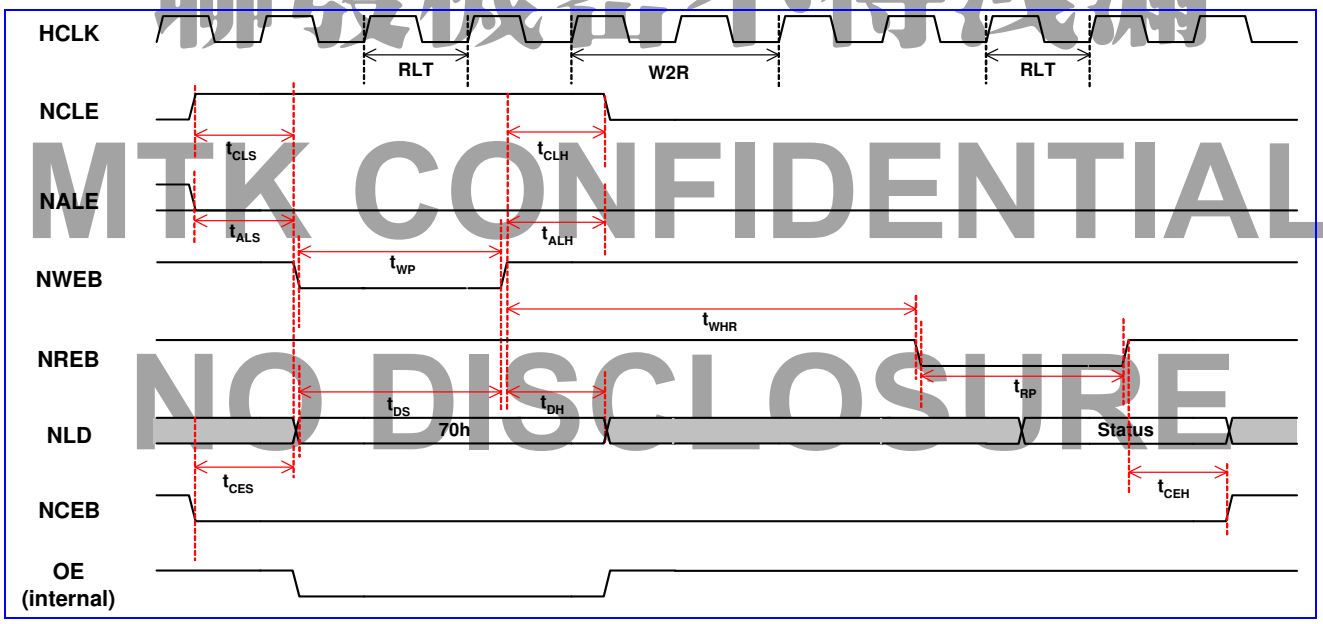

Figure 64 Status read cycle (1 wait state)

IWIT
聯發機密不得洩漏
MTK CONFIDENTIAL
NO DISCLOSURE
IWIT

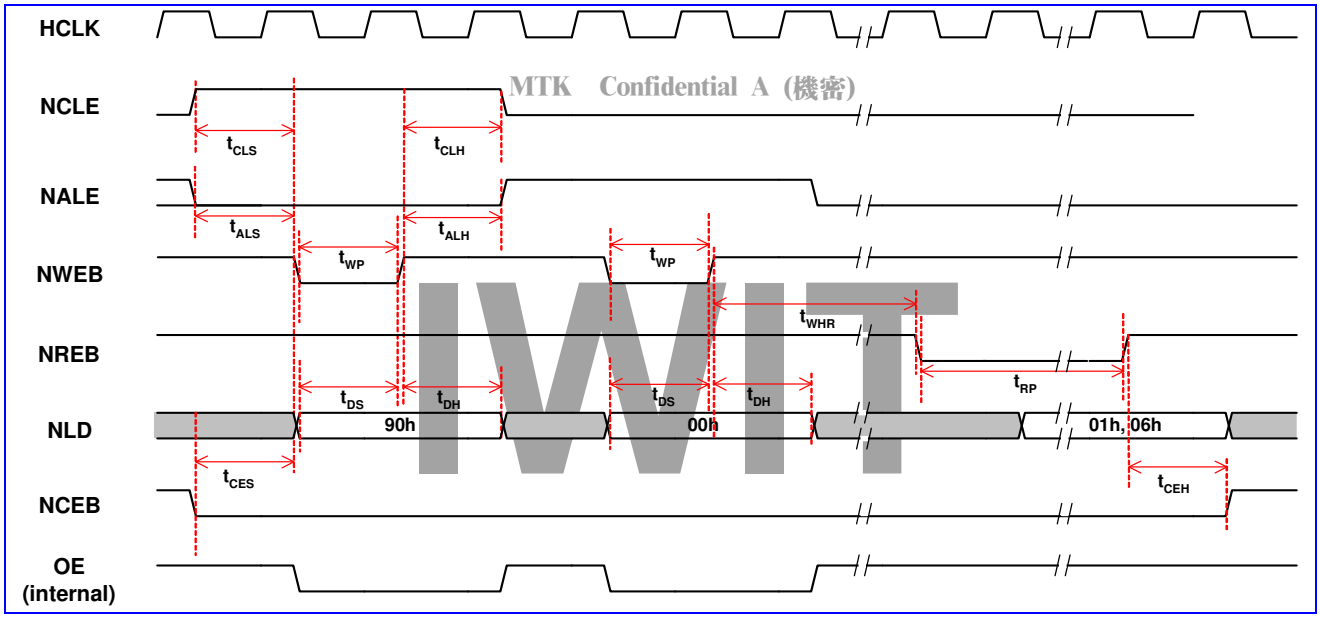

Figure 65 ID and manufacturer read (0 wait state)

6.4 USB Device Controller

6.4.1 General Description

This chip provides a USB function interface that is in compliance with Universal Serial Bus Specification Rev 1.1. The USB device controller supports only full-speed (12Mbps) operation. The cellular phone can make use of this widely available USB interfaces to transmit/receive data with USB hosts, typically PC/laptop.

There provides 5 endpoints in the USB device controller besides the mandatory control endpoint, where among them, 3 endpoints are for IN transactions and 2 endpoints are for OUT transactions. Word, half-word, and byte access are allowed for loading and unloading the FIFO. 4 DMA channels are equipped with the controller to accelerate the data transfer. The features of the endpoints are as follows:

1. Endpoint 0: The control endpoint feature 16 bytes FIFO and accommodates maximum packet size of up to 16 bytes. DMA transfer is not supported.
2. IN endpoint 1: It features 64 bytes FIFO and accommodates maximum packet size of up to 64 bytes. DMA transfer is supported.
3. IN endpoint 2: It features 64 bytes FIFO and accommodates maximum packet size of up to 64 bytes. DMA transfer is supported.
4. IN endpoint 3: It features 16-byte FIFO and accommodates maximum packet size of 16 bytes. DMA transfer is not supported.
5. OUT endpoint 1: It features 64 bytes FIFO and accommodates maximum packet size of 64 bytes. DMA transfer is supported.
6. OUT endpoint 2: It features 64 bytes FIFO and accommodates maximum packet size of 64 bytes. DMA transfer is supported.

For each endpoint except the endpoint 0, if the packet size is small than half the size of the FIFO, at most 2 packets can be buffered.

聯發機密不得洩漏
MTK CONFIDENTIAL
NO DISCLOSURE
IWIT
IWIT

This unit is highly software configurable. All endpoints except the control endpoint can be configured to be a bulk, interrupt or isochronous endpoints. Composite device is also supported. The IN endpoint 1 and the OUT endpoint 1 shares the same endpoint number but they can be use separately. So is the situation as the IN endpoint 2 and the OUT endpoint 2.

MTK Confidential A (機密)

The USB device uses cable-powered feature for the transceiver but only drains little current. An external resistor (nominally 1.5Kohm) is required to be placed across Vbus and D+ signal. Two additional external serial resistors might be needed to place on the output of D+ and D- signals to make the output impedance equivalent to 28~44Ohm.

6.4.2 Register Definitions

70000000h USB function address register USB_FADDR

Bit	7	6	5	4	3	2	1	0
Name	UPD	FADDR						
Type	RO	R/W						
Reset	0	0						

This is an 8-bit register that should be written with the function's 7-bit address (received through a SET_ADDRESS description). It is then used for decoding the function address in subsequent token packets.

UPD Set when FADDR is written. It's cleared when the new address takes effect (at the end of the current transfer).

FADDR The function address of the device.

70000001h USB power control register USB_POWER

Bit	7	6	5	4	3	2	1	0
Name	ISO_UP			SWRSTENAB	RESET	RESUME	SUSPMODE	SUSPENAB
Type	R/W			R/W	RO	R/W	RO	R/W
Reset	0			0	0	0	0	0

ISO_UP When set by the MCU, the core will wait for an SOF token from the time INPKTRDY is set before sending the packet.

SWRSTENAB Set by the MCU to enable the mode in which the device can only be reset by the software after detecting reset signals on the bus. In case the software is delayed by other high-priority process and can't make it to read the command from the buffer before the hardware reset the device after detecting the reset signal on the bus, the command will be lost. That's why the software-reset mode is effective. When the flag is enabled, the hardware state machine can't reset by itself, but rather can be reset by the software. In that sense, the software and the hardware can keep synchronous on detecting the reset signal.

RESET The read-only bit is set when **Reset** signaling is present on the bus.

RESUME Set by the MCU to generate **Resume** signaling when the function is in suspend mode. The MCU should clear this bit after 10 ms (a maximum of 15 ms) to end Resume signaling.

SUSPMODE Set by the USB core when **Suspend** mode is entered. Cleared when the CPU reads the interrupt register, or sets the Resume bit of this register.

SUSPENAB Set by the MCU to enable device into **Suspend** mode when Suspend signaling is received on the bus.

70000002h USB IN endpoints interrupt register USB_INTRIN

Bit	7	6	5	4	3	2	1	0
Name					EP3	EP2	EP1	EP0
Type					RC	RC	RC	RC
Reset					0	0	0	0

This is a read-only register that indicates which of the interrupts for IN endpoints 0 to 3 are currently active. All active interrupts will be cleared when this register is read.

EP3 IN endpoint #3 interrupt.

IWIT 聯發機密不得洩漏 MTK CONFIDENTIAL NO DISCLOSURE IWIT

EP2 IN endpoint #2 interrupt.
EP1 IN endpoint #1 interrupt.
EP0 IN endpoint #0 interrupt.

MTK Confidential A (機密)

70000004h USB OUT endpoints interrupt register USB_INTROUT

Bit	7	6	5	4	3	2	1	0
Name						EP2	EP1	
Type						RC	RC	
Reset						0	0	

This is a read-only register that indicates which of the interrupts for OUT endpoints 1 and 2 are currently active. All active interrupts will be cleared when this register is read.

EP2 OUT endpoint #2 interrupt.
EP1 OUT endpoint #1 interrupt.

70000006h USB general interrupt register USB_INTRUSB

Bit	7	6	5	4	3	2	1	0
Name					SOF	RESET	RESUME	SUSP
Type					RC	RC	RC	RC
Reset					0	0	0	0

This is a read-only register that indicates which USB interrupts are currently active. All active interrupts will be cleared when this register is read.

SOF Set at the start of each frame.
RESET Set when **Reset** signaling is detected on the bus.
RESUME Set when Resume signaling is detected on the bus while the USB core is in suspend mode.
SUSP Set when Suspend signaling is detected on the bus.

70000007h USB IN endpoints interrupt enable register USB_INTRINE

Bit	7	6	5	4	3	2	1	0
Name					EP3	EP2	EP1	EP0
Type					R/W	R/W	R/W	R/W
Reset					1	1	1	1

This register provides interrupt enable bits for the interrupts in USB_INTRIN. On reset, the bits corresponding to endpoint 0 and all IN endpoints are set to 1.

EP3 IN endpoint 3 interrupt enable.
EP2 IN endpoint 2 interrupt enable.
EP1 IN endpoint 1 interrupt enable.
EP0 IN endpoint 0 interrupt enable.

70000009h USB OUT endpoints interrupt enable register USB_INTROUTE

Bit	7	6	5	4	3	2	1	0
Name						EP2	EP1	
Type						R/W	R/W	
Reset						1	1	

This register provides interrupt enable bits for the interrupts in USB_INTROUT. On reset, the bits corresponding to all OUT endpoints are set to 1.

EP2 OUT endpoint 2 interrupt enable.
EP1 OUT endpoint 1 interrupt enable.

IWIT
嚴發機密不得洩漏
MTK CONFIDENTIAL
NO DISCLOSURE
IWIT

7000000Bh USB general interrupt enable register USB_INTRUSBE

MTK Confidential A (機密)

Bit	7	6	5	4	3	2	1	0
Name					SOF	RESET	RESUME	SUSP
Type					R/W	R/W	R/W	R/W
Reset					0	1	1	0

This register provides interrupt enable bits for each of the interrupts for USB_INTRUSB.

SOF SOF interrupt enable
RESET Reset interrupt enable
RESUME Resume interrupt enable
SUSP Suspend interrupt enable

IWIT

7000000Ch USB frame count #1 register USB_FRAME1

Bit	7	6	5	4	3	2	1	0
Name	NUML							
Type	RO							
Reset	0							

The register holds the lower 8 bits of the last received frame number.

NUML The lower 8 bits of the frame number.

7000000Dh USB frame count #2 register USB_FRAME2

聯發機密不得洩漏

Bit	7	6	5	4	3	2	1	0
Name							NUMH	
Type							RO	
Reset							0	

The register holds the upper 3 bits of the last received frame number.

NUMH The upper 3 bits of the frame number.

MTK CONFIDENTIAL

7000000Eh USB endpoint register index USB_INDEX

Bit	7	6	5	4	3	2	1	0
Name					INDEX			
Type					R/W			
Reset					0			

NO DISCLOSURE

The register determines which endpoint control/status registers are to be accessed at addresses USB+10h to USB+17h. Each IN endpoint and each OUT endpoint have their own set of control/status registers. Only one set of IN control/status and one set of OUT control/status registers appear in the memory map at any one time. Before accessing an endpoint's control/status registers, the endpoint number should be written to the USB_INDEX register to ensure that the correct control/status registers appear in the memory map.

INDEX The index of the endpoint.

7000000Fh USB reset control USB_RSTCTRL

Bit	7	6	5	4	3	2	1	0
Name	SWRST					RSTCNTR		
Type	R/W					R/W		
Reset	0					0		

IWIT

The register is used to control the reset process when the device detects the reset command issued from the host.

SWRST If the flag SWRSTENAB in the register USB_POWER is set to be 1, the software enable mode is enabled, and the device can be reset by writing this flag to be 1.

MTK Confidential A (機密)

RSTCNTR The field signifies the duration for the reset operation to take place after detecting reset signal on the bus. It's only enabled when software reset is not enabled. If the value is equal to zero, the duration is 2.5us. Otherwise, the duration is equal to this value multiplied by 341 and then added by 2.5 in unit of us. The range consequently starts from 2.5us to 5122.5 us.

70000011h USB control/status register for endpoint 0 USB_EP0_CSR

Bit	7	6	5	4	3	2	1	0
Name	SSETUPEND	SOUTPKTRDY	SENDSTALL	SETUPEND	DATAEND	SENTSTALL	INPKTRDY	OUTPKTRDY
Type	R/WS	R/WS	R/WS	RO	R/WS	R/WC	R/WS	RO
Reset	0	0	0	0	0	0	0	0

The register is used for all control/status of endpoint 0. The register is active when USB_INDEX register is set to 0.

SSETUPEND The MCU writes a 1 to this bit to clear the SETUPEND bit. It's cleared automatically. Only active when a transaction has been started.

SOUTPKTRDY The MCU writes a 1 to this bit to clear the OUTPKTRDY bit. It's cleared automatically. Only active when an OUT transaction has been started.

SENDSTALL The MCU writes a 1 to this bit to terminate the current transaction. The STALL handshake will be transmitted and then this bit will be cleared automatically.

SETUPEND This bit will be set when a control transaction ends before the DATAEND bit has been set. An interrupt will be generated and FIFO flushed at this time. The bit is cleared by the MCU writing a 1 to the SSETUPEND bit.

DATAEND The MCU sets this bit:

1. When setting INPKTRDY for the last data packet.
2. When clearing OUTPKTRDY after unloading the last data packet.
3. When setting INPKTRDY for a zero length data packet.

It's cleared automatically

SENTSTALL This bit is set when a STALL handshake is transmitted. The MCU should clear this bit by writing a 0.

INPKTRDY The MCU sets this bit after loading a data packet into the FIFO. It is cleared automatically when the data packet has been transmitted. An interrupt is generated when this bit is set.

OUTPKTRDY This bit is set when a data packet has been received. An interrupt is generated when this bit is set. The MCU clears this bit by setting the SOUTPKTRDY bit.

聯發機密不得洩漏
MTK CONFIDENTIAL
NO DISCLOSURE

70000016h USB byte count register USB_EP0_COUNT

Bit	7	6	5	4	3	2	1	0
Name		COUNT						
Type		RO						
Reset		0						

The register indicates the number of received data bytes in the endpoint 0. The value returned is valid while OUTPKTRDY bit of USB_EP0_CSR register is set. The register is active when USB_INDEX register is set to 0.

COUNT The number of received data bytes in the endpoint 0.

70000010h USB maximum packet size register for IN endpoint 1~3 USB_EP_INMAXP

Bit	7	6	5	4	3	2	1	0
Name	MAXP							

Type	R/W
Reset	0

MTK Confidential A (機密)

The register holds the maximum packet size for transactions through the currently selected IN endpoint – in units of 8 bytes. In setting the value, the programmer should note the constraints placed by the USB Specification on packet size for bulk interrupt, and isochronous transactions in full-speed operations. There is an INMAXP register for each IN endpoint except endpoint 0. The registers are active when USB_INDEX register is set to 1, 2, and 3, respectively.

The value written to this register should match the ***wMaxPacketSize*** field of the standard endpoint descriptor for the associated endpoint. A mismatch could cause unexpected results. If a value greater than the configured IN FIFO size for the endpoint is written to the register, the value will be automatically changed to the IN FIFO size. If the value written to the register is less than, or equal to, half the IN FIFO size, two IN packets can be buffered. The configured IN FIFO size for the endpoint 1, 2, and 3, are 64 bytes, 64 bytes, and 16 bytes, respectively.

The register is reset to 0. If the register is changed after packets have been sent from the endpoint, the endpoint IN FIFO should be completely flushed after writing the new value to the register.

MAXP The maximum packet size in units of 8 bytes.

70000011h USB control/status register #1 for IN endpoint 1~3 USB_EP_INCSR1

Bit	7	6	5	4	3	2	1	0
Name		CLRDATATOG	SENTSTALL	SENDSTALL	FLUSHFIFO	UNDERRUN	FIFONOTEMPTY	INPKTRDY
Type		WO	R/WC	R/W	WO	R/WC	RO	R/WS
Reset		0	0	0	0	0	0	0

聯發機密不得洩漏

The register provides control and status bits for IN transactions through the currently selected endpoint. There is an INCSR1 register for each IN endpoint except endpoint 0. The registers are active when USB_INDEX register is set to 1, 2, and 3, respectively.

MTK CONFIDENTIAL

CLRDATATOG The MCU writes a 1 to this bit to reset the endpoint IN data toggle to 0.

SENTSTALL The bit is set when a STALL handshake is transmitted. The FIFO is flushed and the INPKTRDY bit is cleared. The MCU should clear this bit by writing a 0 to this bit.

SENDSTALL The MCU writes a 1 to this bit to issue a STALL handshake to an IN token. The MCU clears this bit to terminate the stall condition.

FLUSHFIFO The MCU writes a 1 to this bit to flush the next packet to be transmitted from the endpoint IN FIFO. The FIFO pointer is reset and the INPKTRDY bit is cleared. If the FIFO contains two packets, FLUSHFIFO will need to be set twice to completely clear the FIFO.

NO DISCLOSURE

UNDERRUN In isochronous mode, this bit is set when a zero length data packet is sent after receiving an IN token with the INPKTRDY bit not set. In Bulk/Interrupt mode, this bit is set when a NAK is returned in response to an IN token. The MCU should clear this bit by writing a 0 to this bit.

FIFONOTEMPTY This bit is set when there is at least 1 packet in the IN FIFO.

INPKTRDY The MCU sets this bit after loading a data packet into the FIFO. Only active when an IN transaction has been started. It is cleared automatically when a data packet has been transmitted. An interrupt is generated (if enabled) when the bit is cleared.

70000012h USB control/status register #2 for IN endpoint 1~3 USB_EP_INCSR2

Bit	7	6	5	4	3	2	1	0
Name	AUTOSET	ISO	MODE	DMAENAB	RFCDATATOG			
Type	R/W	R/W	R/W	R/W	R/W			
Reset	0	0	0	0	0			

The register provides further control bits for IN transactions through the currently selected endpoint. There is an INCSR2 register for each IN endpoint except endpoint 0. The registers are active when USB_INDEX register is set to 1, 2, and 3, respectively.

MTK Confidential A (機密)

AUTOSET If the MCU sets the bit, INPKTRDY will be automatically set when data of the maximum packet size (value in INMAXP) is loaded into the IN FIFO. If a packet of less than the maximum packet size is loaded, then INPKTRDY will have to be set manually. When 2 packets are in the IN FIFO then INPKTRDY will also be automatically set when the first packet has been sent, if the second packet is the maximum packet size.

ISO The MCU sets this bit to enable the IN endpoint for isochronous transfer, and clears it to enable the IN endpoint for bulk/interrupt transfers.

MODE The MCU sets this bit to enable the endpoint direction as IN, and clears it to enable the endpoint direction as OUT. It's valid only where the same endpoint FIFO is used for both IN and OUT transaction.

DMAENAB The MCU sets this bit to enable the DMA request for the IN endpoint.

FRCDATATOG The MCU sets this bit to force the endpoint's IN data toggle to switch after each data packet is sent regardless of whether an ACK was received. This can be used by interrupt IN endpoints which are used to communicate rate feedback for isochronous endpoints.

70000013h USB maximum packet size register for OUT endpoint 1~2 USB_EP_OUTMAXP

Bit	7	6	5	4	3	2	1	0
Name	MAXP							
Type	R/W							
Reset	0							

聯發機密不得洩漏

This register holds the maximum packet size for transactions through the currently selected OUT endpoint – in units of 8 bytes. In setting this value, the programmer should note the constraints placed by the USB specification on packet sizes for bulk, interrupt, and isochronous transactions in full speed operations. There is an OUTMAXP register for each OUT endpoint except endpoint 0. The registers are active when USB_INDEX register is set to 1 and 2, respectively.

MTK CONFIDENTIAL

The value written to this register should match the ***wMaxPacketSize*** field of the standard endpoint descriptor for the associated endpoint. A mismatch could cause unexpected results. The total amount of data represented by the value written to this register must not exceed the FIFO size for the OUT endpoint, and should not exceed half the FIFO size if double buffering is required. If a value greater than the configured OUT FIFO size for the endpoint is written to the register, the value will be automatically changed to the OUT FIFO size. If the value written to the register is less than, or equal to, half the OUT FIFO size, two OUT packets can be buffered. The configured IN FIFO size for the endpoint 1 and 2 are both 64 bytes.

NO DISCLOSURE

MAXP The maximum packet size in units of 8 bytes.

70000014h USB control/status register #1 for OUT endpoint 1~2 USB_EP_OUTCSR1

Bit	7	6	5	4	3	2	1	0
Name	CLRDATATOG	SENTSTALL	SENDSTALL	FLUSHFIFO	DATAERROR	OVERRUN	FIFOFULL	OUTPKTRDY
Type	WO	R/WC	R/W	WO	RO	R/WC	RO	R/WC
Reset	0	0	0	0	0	0	0	0

The register provides control status bits for OUT transactions through the currently selected endpoint. The registers are active when USB_INDEX register is set to 1 and 2, respectively.

CLRDATATOG The MCU writes a 1 to this bit to reset the endpoint data toggle to 0.

SENTSTALL The bit is set when a STALL handshake is transmitted. The MCU should clear this bit by writing a 0.

MTK Confidential A (機密)

SENDSTALL The MCU writes a 1 to this bit to issue a STALL handshake. The MCU clears this bit to terminate the stall condition. This bit has no effect if the OUT endpoint is in isochronous mode.

FLUSHFIFO The MCU writes a 1 to this bit to flush the next packet to be read from the endpoint OUT FIFO. If the FIFO contains two packets, FLUSHFIFO will need to be set twice to completely clear the FIFO.

DATAERROR The bit is set when OUTPKTRDY is set if the data packet has a CRC or bit-stuff error. It is cleared when OUTPKTRDY is cleared. This bit is only valid in isochronous mode.

OVERRUN The bit is set if an OUT packet cannot be loaded into the OUT FIFO. The MCU should clear the bit by writing a zero. This bit is only valid in isochronous mode.

FIFOFULL This bit is set when no more packets can be loaded into the OUT FIFO.

OUTPKTRDY The bit is set when a data packet has been received. The MCU should clear (write a 0 to) the bit when the packet has been unloaded from the OUT FIFO. An interrupt is generated when the bit is set.

70000015h USB control/status register #2 for OUT endpoint 1~2 USB_EP_OUTCSR2

Bit	7	6	5	4	3	2	1	0
Name	AUTOCLEAR	ISO	DMAENAB	DMAMODE				
Type	R/W	R/W	R/W	R/W				
Reset	0	0	0	0				

The register provides further control bits for OUT transactions through the currently selected endpoint. The registers are active when USB_INDEX register is set to 1 and 2, respectively.

聯發機密不得洩漏

AUTOCLEAR If the MCU sets this bit then the OUTPKTRDY bit will be automatically cleared when a packet of OUTMAXP bytes has been unloaded from the OUT FIFO. When packets of less then the maximum packet size are unloaded, OUTPKTRDY will have to be cleared manually.

ISO The MCU sets this bit to enable the OUT endpoint for isochronous transfers, and clears it to enable the OUT endpoint for bulk/interrupt transfers.

MTK CONFIDENTIAL

DMAENAB The MCU sets this bit to enable the DMA request for the OUT endpoint.

DMAMODE Two modes of DMA operation are supported: DMA mode 0 in which a DMA request is generated for all received packets, together with an interrupt (if enabled); and DMA mode 1 in which a DMA request (but no interrupt) is generated for OUT packets of size OUTMAXP bytes and an interrupt (but no DMA request) is generated for OUT packets of any other size. The MCU sets the bit to select DMA mode 1 and clears this bit to select DMA mode 0.

NO DISCLOSURE

70000016h USB OUT endpoint byte counter register LSB part for USB_EP_COUNT1 endpoint 1~2

Bit	7	6	5	4	3	2	1	0
Name	NUML							
Type	RO							
Reset	0							

The register holds the lower 8 bits of the number of received data bytes in the packet in the FIFO associated with the currently selected OUT endpoint. The value returned is valid while OUTPKTRDY in the register USB_OUTCSR1 is set. The registers are active when USB_INDEX register is set to 1 and 2, respectively.

NUML The lower 8 bits of the number of received data bytes for the OUT endpoint.

70000017h USB OUT endpoint byte counter register MSB part for endpoint 1~2 USB_EP_COUNT2

MTK Confidential A (機密)

Bit	7	6	5	4	3	2	1	0
Name						NUMH		
Type						RO		
Reset						0		

The register holds the upper 3 bits of the number of received data bytes in the packet in the FIFO associated with the currently selected OUT endpoint. The value returned is valid while OUTPKTRDY in the register USB_EP_OUTCSR1 is set. The registers are active when USB_INDEX register is set to 1 and 2, respectively.

NUMH The upper 8 bits of the number of received data bytes for the OUT endpoint.

70000020h USB endpoint 0 FIFO access register USB_EP0_FIFO

Bit	31	30	29	28	27	26	25	24	23	22	21	20	19	18	17	16
Name	DB3								DB2							
Type	R/W								R/W							
Bit	15	14	13	12	11	10	9	8	7	6	5	4	3	2	1	0
Name	DB1								DB0							
Type	R/W								R/W							

The register provides MCU access to the FIFO for the endpoint 0. Writing to this register loads data into the FIFO for the endpoint 0. Reading from this register unloads data from the FIFO for the endpoint 0.

The register provides word, half-word, and byte mode access. If word or half-word accesses are performed, the less significant byte corresponds to the prior byte to load in or unload from the FIFO.

DB0 The first byte to be loaded into or unloaded from the FIFO.
DB1 The second byte to be loaded into or unloaded from the FIFO.
DB2 The third byte to be loaded into or unloaded from the FIFO.
DB3 The forth byte to be loaded into or unloaded from the FIFO.

70000024h USB endpoint 1 FIFO access register USB_EP1_FIFO

Bit	31	30	29	28	27	26	25	24	23	22	21	20	19	18	17	16
Name	DB3								DB2							
Type	R/W								R/W							
Bit	15	14	13	12	11	10	9	8	7	6	5	4	3	2	1	0
Name	DB1								DB0							
Type	R/W								R/W							

The register provides MCU access to the IN FIFO and the OUT FIFO for the endpoint 1. Writing to the register loads data into the IN FIFO for the endpoint 1. Reading from the register unloads data from the OUT FIFO for the endpoint 1.

The register provides word, half-word, and byte mode access. If word or half-word accesses are performed, the less significant byte corresponds to the prior byte to load in the IN FIFO or unload from the OUT FIFO.

DB0 The first byte to be loaded in the IN FIFO or unloaded from the OUT FIFO.
DB1 The second byte to be loaded in the IN FIFO or unloaded from the OUT FIFO.
DB2 The third byte to be loaded in the IN FIFO or unloaded from the OUT FIFO.
DB3 The forth byte to be loaded in the IN FIFO or unloaded from the OUT FIFO.

70000028h USB endpoint 2 FIFO access register USB_EP2_FIFO

Bit	31	30	29	28	27	26	25	24	23	22	21	20	19	18	17	16
Name	DB3								DB2							
Type	R/W								R/W							
Bit	15	14	13	12	11	10	9	8	7	6	5	4	3	2	1	0

聯發機密不得洩漏
MTK CONFIDENTIAL
NO DISCLOSURE

Name	DB1	DB0
Type	R/W	R/W

MTK Confidential A (機密)

The register provides MCU access to the IN FIFO and the OUT FIFO for the endpoint 2. Writing to the register loads data into the IN FIFO for the endpoint 2. Reading from the register unloads data from the OUT FIFO for the endpoint 2.

The register provides word, half-word, and byte mode access. If word or half-word accesses are performed, the less significant byte corresponds to the prior byte to load in the IN FIFO or unload from the OUT FIFO.

DB0 The first byte to be loaded into the IN FIFO or unloaded from the OUT FIFO.
DB1 The second byte to be loaded into the IN FIFO or unloaded from the OUT FIFO.
DB2 The third byte to be loaded into the IN FIFO or unloaded from the OUT FIFO.
DB3 The forth byte to be loaded into the IN FIFO or unloaded from the OUT FIFO.

7000002Ch USB endpoint 3 FIFO access register USB_EP3_FIFO

Bit	31	30	29	28	27	26	25	24	23	22	21	20	19	18	17	16
Name	DB3								DB2							
Type	R/W								R/W							
Bit	15	14	13	12	11	10	9	8	7	6	5	4	3	2	1	0
Name	DB1								DB0							
Type	R/W								R/W							

The register provides MCU access to the IN FIFO for the endpoint 3. Writing to the register loads data into the IN FIFO for the endpoint 3.

The register provides word, half-word, and byte mode access. If word or half-word accesses are performed, the less significant byte corresponds to the prior byte to load in the IN FIFO.

DB0 The first byte to be loaded into the IN FIFO.
DB1 The second byte to be loaded into the IN FIFO.
DB2 The third byte to be loaded into the IN FIFO.
DB3 The forth byte to be loaded into the IN FIFO.

聯發機密不得洩漏
MTK CONFIDENTIAL
NO DISCLOSURE
IWIT

6.5 Memory Stick and SD Memory Card Controller

6.5.1 Introduction

The controller fully supports the Memory Stick bus protocol as defined in Format Specification version 2.0 of Memory Stick Standard (Memory Stick PRO) and the SD Memory Card bus protocol as defined in SD Memory Card Specification Part 1 Physical Layer Specification version 1.0 as well as the MultiMediaCard (MMC) bus protocol as defined in MMC system specification version 2.2. Since SD Memory Card bus protocol is backward compatible to MMC bus protocol, the controller is capable of working well as the host on MMC bus under control of proper firmware. Furthermore, the controller also support SDIO card specification version 1.0 partially. However, the controller can only be configured as either the host of Memory Stick or the host of SD/MMC Memory Card at one time. Hereafter, the controller is also abbreviated as MS/SD controller. The following are the main features of the controller.

- Interface with MCU by APB bus
- 16/32-bit access on APB bus
- 16/32-bit access for control registers
- 32-bit access for FIFO
- Shared pins for Memory Stick and SD/MMC Memory Card
- Built-in 32 bytes FIFO buffers for transmit and receive, FIFO is shared for transmit and receive

- Built-in CRC circuit
- CRC generation can be disabled
- DMA supported
- Interrupt capabilities
- Automatic command execution capability when an interrupt from Memory Stick
- Data rate up to 26 Mbps in serial mode, 26x4 Mbps in parallel model, the module is targeted at 26 MHz operating clock
- Serial clock rate on MS/SD/MMC bus is programmable
- Card detection capabilities
- Controllability of power for memory card
- Not support SPI mode for MS/SD/MMC Memory Card
- Not support multiple SD Memory Cards

MTK Confidential A (機密)
IWIT
聯發機密不得洩漏
MTK CONFIDENTIAL
NO DISCLOSURE
IWIT

6.5.2 Overview

6.5.2.1 Pin Assignment

Since the controller can only be configured as either the host of Memory Stick or the host of SD/MMC Memory Card at one time, pins for Memory Stick and SD/MMC Memory Card are shared in order to save pin counts. The following lists pins required for Memory Stick and SD/MMC Memory Card. **Table 41** shows how they are shared. In **Table 41**, all I/O pads have embedded both pull up and pull down resistor because they are shared by both the Memory Stick and SD/MMC Memory Card. Pins 2,4,5,8 are only useful for SD/MMC Memory Card. Pull down resistor for these pins can be used for power saving. All embedded pull-up and pull-down resistors can be disabled by programming the corresponding control registers if optimal pull-up or pull-down resistors are required on the system board. The pin VDDPD is used for power saving. Power for Memory Stick or SD/MMC Memory Card can be shut down by programming the corresponding control register. The pin WP (Write Protection) is only valid when the controller is configured for SD/MMC Memory Card. It is used to detect the status of Write Protection Switch on SD/MMC Memory Card.

No.	Name	Type	MMC	SD	MS	MSPRO	Description
1	SD_CLK	O	CLK	CLK	SCLK	SCLK	Clock
2	SD_DAT3	I/O/PP		CD/DAT3		DAT3	Data Line [Bit 3]
3	SD_DAT0	I/O/PP	DAT0	DAT0	SDIO	DAT0	Data Line [Bit 0]
4	SD_DAT1	I/O/PP		DAT1		DAT1	Data Line [Bit 1]
5	SD_DAT2	I/O/PP		DAT2		DAT2	Data Line [Bit 2]
6	SD_CMD	I/O/PP	CMD	CMD	BS	BS	Command Or Bus State
7	SD_PWRON	O					VDD ON/OFF
8	SD_WP	I					Write Protection Switch in SD
9	SD_INS	I	VSS2	VSS2	INS	INS	Card Detection

Table 41 Sharing of pins for Memory Stick and SD/MMC Memory Card Controller

6.5.2.2 Card Detection

For Memory Stick, the host or connector should provide a pull up resistor on the signal INS. Therefore, the signal INS will be logic high if no Memory Stick is on line. The scenario of card detection for Memory Stick is shown in **Figure 66**. Before Memory Stick is inserted or powered on, on host side SW1 shall be closed and SW2 shall be opened for card detection. It is the default setting when the controller is powered on. Upon insertion of Memory Stick, the signal

INS will have a transition from high to low. Hereafter, if Memory Stick is removed then the signal INS will return to logic high. If card insertion is intended to not be supported, SW1 shall be opened and SW2 closed always.

MTK Confidential A (機密)

For SD/MMC Memory Card, detection of card insertion/removal by hardware is also supported. Because a pull down resistor with about 470 KΩ resistance which is impractical to embed in an I/O pad is needed on the signal CD/DAT3, and it has to be capable of being connected or disconnected dynamically onto the signal CD during initialization period, an additional I/O pad is needed to switch on/off the pull down resistor on the system board. The scenario of card detection for SD/MMC Memory Card is shown in **Figure 67**. Before SD/MMC Memory Card is inserted or powered on, SW1 and SW2 shall be opened for card detection on the host side. Meanwhile, pull down resistor R_{CD} on system board shall attach onto the signal CD/DAT3 by the output signal RCDEN. In addition, SW3 on the card is default to be closed. Upon insertion of SD/MMC Memory Card, the signal CD/DAT3 will have a transition from low to high. If SD/MMC Memory Card is removed then the signal CD/DAT3 will return to logic low. After the card identification process, pull down resistor R_{CD} on system board shall disconnect with the signal CD/DAT3 and SW3 on the card shall be opened for normal operation.

Since the scheme above needs a mechanical switch such as a relay on system board, it is not ideal enough. Thus, a dedicated pin "INS" is used to perform card insertion and removal for SD/MMC. The pin "INS" will connect to the pin "VSS2" of a SD/MMC connector. Then the scheme of card detection is the same as that for MS. It is shown in **Figure 66**.

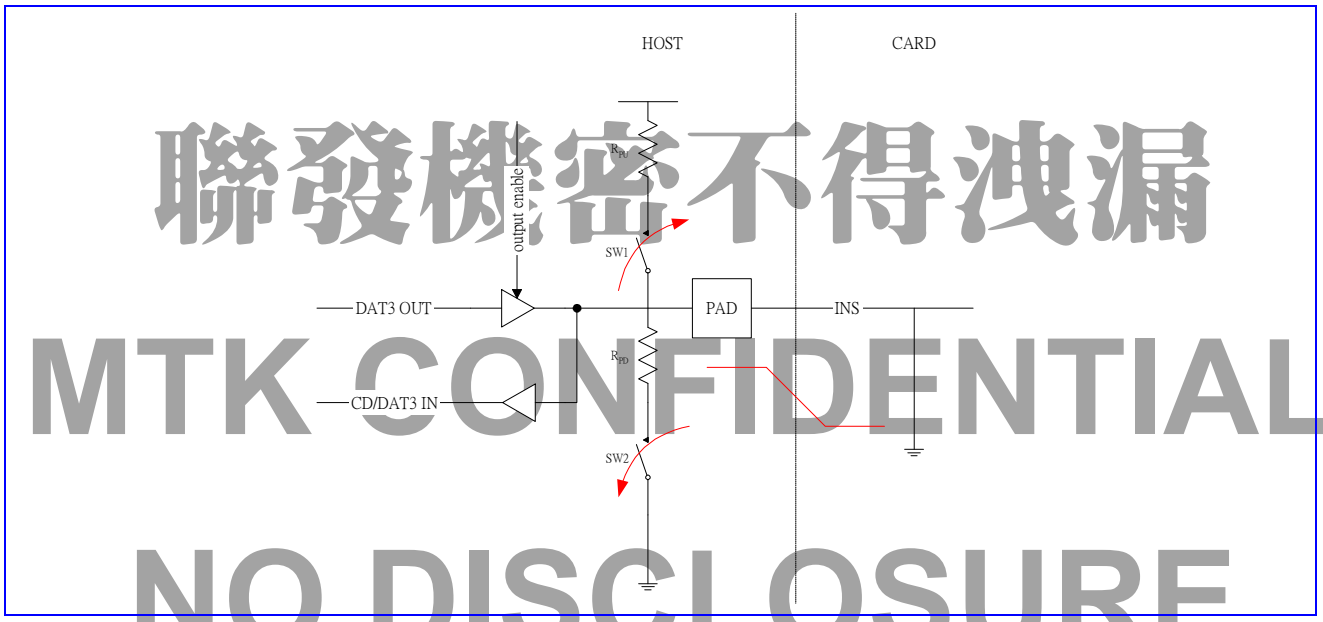

聯發機密不得洩漏
MTK CONFIDENTIAL
NO DISCLOSURE

Figure 66 Card detection for Memory Stick

IWIT

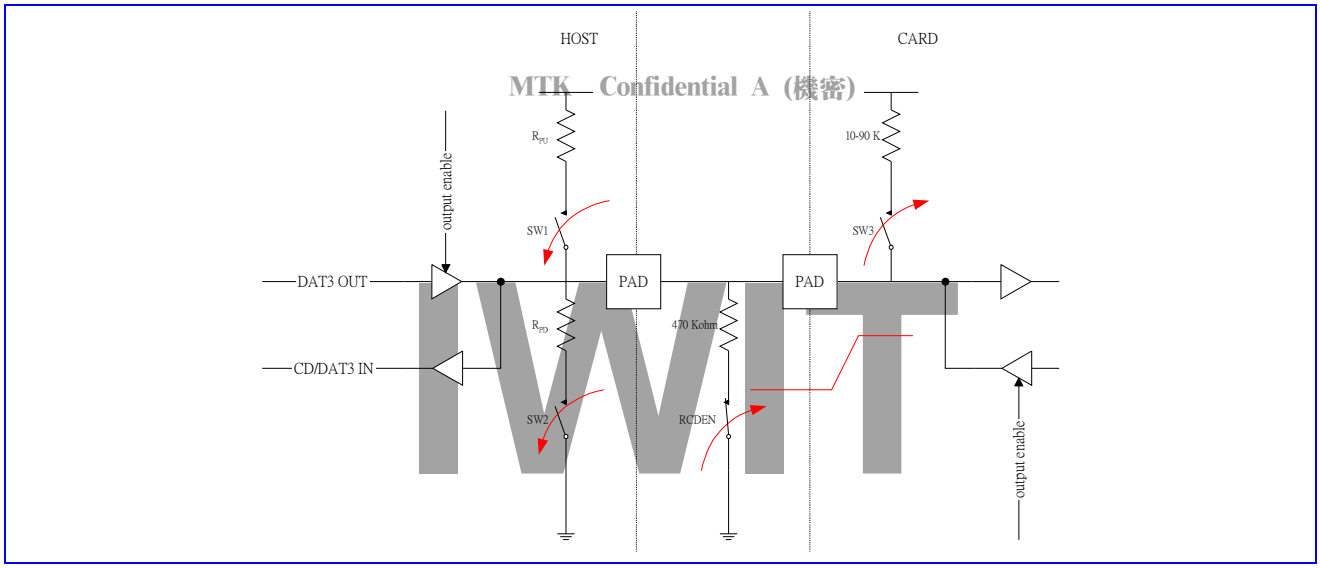

Figure 67 Card detection for SD/MMC Memory Card

聯發機密不得洩漏
MTK CONFIDENTIAL
NO DISCLOSURE
IWIT

6.5.3 Register Definitions

MTK Confidential A (機密)

REGISTER ADDRESS	REGISTER NAME	SYNONYM
MSDC + 0000h	MS/SD Memory Card Controller Configuration Register	MSDC_CFG
MSDC + 0004h	MS/SD Memory Card Controller Status Register	MSDC_STA
MSDC + 0008h	MS/SD Memory Card Controller Interrupt Register	MSDC_INT
MSDC + 000Ch	MS/SD Memory Card Controller Data Register	MSDC_DAT
MSDC + 00010h	MS/SD Memory Card Pin Status Register	MSDC_PS
MSDC + 00014h	MS/SD Memory Card Controller IO Control Register	MSDC_IOCON
MSDC + 0020h	SD Memory Card Controller Configuration Register	SDC_CFG
MSDC + 0024h	SD Memory Card Controller Command Register	SDC_CMD
MSDC + 0028h	SD Memory Card Controller Argument Register	SDC_ARG
MSDC + 002Ch	SD Memory Card Controller Status Register	SDC_STA
MSDC + 0030h	SD Memory Card Controller Response Register 0	SDC_RESP0
MSDC + 0034h	SD Memory Card Controller Response Register 1	SDC_RESP1
MSDC + 0038h	SD Memory Card Controller Response Register 2	SDC_RESP2
MSDC + 003Ch	SD Memory Card Controller Response Register 3	SDC_RESP3
MSDC + 0040h	SD Memory Card Controller Command Status Register	SDC_CMDSTA
MSDC + 0044h	SD Memory Card Controller Data Status Register	SDC_DATSTA
MSDC + 0048h	SD Memory Card Status Register	SDC_CSTA
MSDC + 004Ch	SD Memory Card IRQ Mask Register 0	SDC_IRQMASK0
MSDC + 0050h	SD Memory Card IRQ Mask Register 1	SDC_IRQMASK1
MSDC + 0054h	SDIO Configuration Register	SDIO_CFG
MSDC + 0058h	SDIO Status Register	SDIO_STA
MSDC + 0060h	Memory Stick Controller Configuration Register	MSC_CFG
MSDC + 0064h	Memory Stick Controller Command Register	MSC_CMD
MSDC + 0068h	Memory Stick Controller Auto Command Register	MSC_ACMD
MSDC + 006Ch	Memory Stick Controller Status Register	MSC_STA

Table 42 MS/SD Controller Register Map

IWIT 勝發機密不得洩漏 MTK CONFIDENTIAL NO DISCLOSURE

6.5.3.1 Global Register Definitions

MSDC+0000h **MS/SD Memory Card Controller Configuration Register** **MSDC_CFG**

Bit	31	30	29	28	27	26	25	24	23	22	21	20	19	18	17	16
Name	FIFOTHD				PRCFG2		PRCFG1		PRCFG0		VDDPD	RCDEN	DIRQEN	PINEN	DMAEN	INTEN
Type	R/W				R/W		R/W		R/W		R/W	R/W	R/W	R/W	R/W	R/W
Reset	0001				01		01		10		0	0	0	0	0	0
Bit	15	14	13	12	11	10	9	8	7	6	5	4	3	2	1	0
Name	SCLKF								SCLKON	RED	STDBY	CLKSRC	RST	NOCRC		MSDC
Type	R/W								R/W	R/W	R/W	R/W	W	R/W		R/W
Reset	00000000								0	0	1	0	0	0		0

The register is for general configuration of the MS/SD controller. Note that MSDC_CFG[31:16] can be accessed by 16-bit APB bus access.

MSDC The register bit is used to configure the controller as the host of Memory Stick or as the host of SD/MMC Memory card. The default value is to configure the controller as the host of Memory Stick.

MTK Confidential A (機密)

0 Configure the controller as the host of Memory Stick

1 Configure the controller as the host of SD/MMC Memory card

NOCRC CRC Disable. A '1' indicates that data transfer without CRC is desired. For write data block, data will be transmitted without CRC. For read data block, CRC will not be checked. It is for testing purpose.

0 Data transfer with CRC is desired.

1 Data transfer without CRC is desired.

RST Software Reset. Writing a '1' to the register bit will cause internal synchronous reset of MS/SD controller, but does not reset register settings.

0 Otherwise

1 Reset MS/SD controller

CLKSRC The register bit specifies which clock is used as source clock of memory card. If MUC clock is used, the fastest clock rate for memory card is 52/2=26MHz. If USB clock is used, the fastest clock rate for memory card is 48/2=24MHz.

0 Use MCU clock as source clock of memory card.

1 Use USB clock as source clock of memory card.

STDBY Standby Mode. If the module is powered down, operating clock to the module will be stopped. At the same time, clock to card detection circuitry will also be stopped. If detection of memory card insertion and removal is desired, write '1' to the register bit. If interrupt for detection of memory card insertion and removal is enabled, interrupt will take place whenever memory is inserted or removed.

0 Standby mode is disabled.

1 Standby mode is enabled.

RED Rise Edge Data. The register bit is used to determine that serial data input is latched at the falling edge or the rising edge of serial clock. The default setting is at the rising edge. If serial data has worse timing, set the register bit to '1'. **When memory card has worse timing on return read data, set the register bit to '1'.**

0 Serial data input is latched at the rising edge of serial clock.

1 Serial data input is latched at the falling edge of serial clock.

SCLKON Serial Clock Always On. It is for debugging purpose.

0 Not to have serial clock always on.

1 To have serial clock always on.

SCLKF The register field controls clock frequency of serial clock on MS/SD bus. Denote clock frequency of MS/SD bus serial clock as f_{slave} and clock frequency of the MS/SD controller as f_{host} which is 104 or 52 MHz. Then the value of the register field is as follows. **Note that the allowable maximum frequency of f_{slave} is 26MHz**.

00000000b $f_{slave} = (1/2) * f_{host}$

00000001b $f_{slave} = (1/(4*1)) * f_{host}$

00000010b $f_{slave} = (1/(4*2)) * f_{host}$

00000011b $f_{slave} = (1/(4*3)) * f_{host}$

…

00010000b $f_{slave} = (1/(4*16)) * f_{host}$

…

11111111b $f_{slave} = (1/(4*255)) * f_{host}$

INTEN Interrupt Enable. Note that if interrupt capability is disabled then application software must poll the status of the register MSDC_STA to check for any interrupt request.

0 Interrupt induced by various conditions is disabled, no matter the controller is configured as the host of either SD/MMC Memory Card or Memory Stick.

1 Interrupt induced by various conditions is enabled, no matter the controller is configured as the host of either SD/MMC Memory Card or Memory Stick.

IWIT
聯發機密不得洩漏
MTK CONFIDENTIAL
NO DISCLOSURE
IWIT

DMAEN DMA Enable. Note that if DMA capability is disabled then application software must poll the status of the register MSDC_STA for checking any data transfer request. If DMA is desired, the register bit must be set before command register is written. MTK Confidential A (機密)

- **0** DMA request induced by various conditions is disabled, no matter the controller is configured as the host of either SD/MMC Memory Card or Memory Stick.
- **1** DMA request induced by various conditions is enabled, no matter the controller is configured as the host of either SD/MMC Memory Card or Memory Stick.

PINEN Pin Interrupt Enable. The register bit is used to control if the pin for card detection is used as an interrupt source.

- **0** The pin for card detection is not used as an interrupt source.
- **1** The pin for card detection is used as an interrupt source.

DIRQEN Data Request Interrupt Enable. The register bit is used to control if data request is used as an interrupt source.

- **0** Data request is not used as an interrupt source.
- **1** Data request is used as an interrupt source.

RCDEN The register bit controls the output pin RCDEN that is used for card identification process when the controller is for SD/MMC Memory Card. Its output will control the pull down resistor on the system board to connect or disconnect with the signal CD/DAT3.

- **0** The output pin RCDEN will output logic low.
- **1** The output pin RCDEN will output logic high.

VDDPD The register bit controls the output pin VDDPD that is used for power saving. The output pin VDDPD will control power for memory card.

- **0** The output pin VDDPD will output logic low. The power for memory card will be turned off.
- **1** The output pin VDDPD will output logic high. The power for memory card will be turned on.

PRCFG0 Pull Up/Down Register Configuration for the pin WP. The default value is 10.

- **00** Pull up resistor and pull down resistor in the I/O pad of the pin WP are all disabled.
- **01** Pull down resistor in the I/O pad of the pin WP is enabled.
- **10** Pull up resistor in the I/O pad of the pin WP is enabled.
- **11** Use keeper of IO pad.

PRCFG1 Pull Up/Down Register Configuration for the pin CMD/BS. The default value is 0b01.

- **00** Pull up resistor and pull down resistor in the I/O pad of the pin CMD/BS are all disabled.
- **01** Pull down resistor in the I/O pad of the pin CMD/BS is enabled.
- **10** Pull up resistor in the I/O pad of the pin CMD/BS is enabled.
- **11** Use keeper of IO pad.

PRCFG2 Pull Up/Down Register Configuration for the pins DAT0, DAT1, DAT2, DAT3. The default value is 0b01.

- **00** Pull up resistor and pull down resistor in the I/O pads o the pins DAT0, DAT1, DAT2, DAT3. are all disabled.
- **01** Pull down resistor in the I/O pads of the pins DAT0, DAT1, DAT2, DAT3 and WP. is enabled.
- **10** Pull up resistor in the I/O pads of the pins DAT0, DAT1, DAT2, DAT3. is enabled.
- **11** Use keeper of IO pad.

FIFOTHD FIFO Threshold. The register field determines when to issue a DMA request. For write transactions, DMA requests will be asserted if the number of free entries in FIFO are larger than or equal to the value in the register field. For read transactions, DMA requests will be asserted if the number of valid entries in FIFO are larger than or equal to the value in the register field. The register field must be set according to the setting of data transfer count in DMA burst mode. If single mode for DMA transfer is used, the register field shall be set to 0b0001.

- **0000** Invalid.
- **0001** Threshold value is 1.

IWIT
聯發機密不得洩漏
MTK CONFIDENTIAL
NO DISCLOSURE
IWIT

0010 Threshold value is 2.

…

1000 Threshold value is 8.

MTK Confidential A (機密)

others Invalid

MSDC+0004h MS/SD Memory Card Controller Status Register MSDC_STA

Bit	15	14	13	12	11	10	9	8	7	6	5	4	3	2	1	0
Name	BUSY	FIFOCLR							FIFOCNT				INT	DRQ	BE	BF
Type	R	W							RO				RO	RO	RO	RO
Reset	0	-							0000				0	0	0	0

The register contains the status of FIFO, interrupts and data requests.

BF The register bit indicates if FIFO in MS/SD controller is full.

0 FIFO in MS/SD controller is not full.

1 FIFO in MS/SD controller is full.

BE The register bit indicates if FIFO in MS/SD controller is empty.

0 FIFO in MS/SD controller is not empty.

1 FIFO in MS/SD controller is empty.

DRQ The register bit indicates if any data transfer is required. While any data transfer is required, the register bit still will be active even if the register bit DIRQEN in the register MSDC_CFG is disabled. Data transfer can be achieved by DMA channel alleviating MCU loading, or by polling the register bit to check if any data transfer is requested. While the register bit DIRQEN in the register MSDC_CFG is disabled, the second method is used.

0 No DMA request exists.

1 DMA request exists.

INT The register bit indicates if any interrupt exists. While any interrupt exists, the register bit still will be active even if the register bit INTEN in the register MSDC_CFG is disabled. MS/SD controller can interrupt MCU by issuing interrupt request to Interrupt Controller, or software/application polls the register endlessly to check if any interrupt request exists in MS/SD controller. While the register bit INTEN in the register MSDC_CFG is disabled, the second method is used. For read commands, it is possible that timeout error takes place. Software can read the status register to check if timeout error takes place without OS time tick support or data request is asserted. Note that the register bit will be cleared when reading the register MSDC_INT.

0 No interrupt request exists.

1 Interrupt request exists.

FIFOCNT FIFO Count. The register field shows how many valid entries are in FIFO.

0000 There is 0 valid entry in FIFO.

0001 There is 1 valid entry in FIFO.

0010 There are 2 valid entries in FIFO.

…

1000 There are 8 valid entries in FIFO.

others Invalid

FIFOCLR Clear FIFO. Writing '1' to the register bit will cause the content of FIFO clear and reset the status of FIFO controller.

0 No effect on FIFO.

1 Clear the content of FIFO clear and reset the status of FIFO controller.

BUSY Status of the controller. If the controller is in busy state, the register bit will be '1'. Otherwise '0'.

0 The controller is in busy state.

1 The controller is in idle state.

IWIT
聯發機密不得洩漏
MTK CONFIDENTIAL
NO DISCLOSURE
IWIT

MSDC+0008h MS/SD Memory Card Controller Interrupt Register MSDC_INT

MTK Confidential A (機密)

Bit	15	14	13	12	11	10	9	8	7	6	5	4	3	2	1	0
Name									SDIOIRQ	SDR1BIRQ	MSIFIRQ	SDMCIRQ	SDDATIRQ	SDCMDIRQ	PINIRQ	DIRQ
Type									RC	RC	RC	RC	RC	RC	RC	RC
Reset									0	0	0	0	0	0	0	0

The register contains the status of interrupts. Note that the register still show status of interrupt even though interrupt is disabled, that is, the register bit INTEN of the register MSDC_CFG is set to '0. It implies that software interrupt can be implemented by polling the register bit INT of the register MSDC_STA and this register. **However, if hardware interrupt is desired, remember to clear the register before setting the register bit INTEN of the register MSDC_CFG to '1'. Or undesired hardware interrupt arisen from previous interrupt status may take place.**

DIRQ Data Request Interrupt. The register bit indicates if any interrupt for data request exists. Whenever data request exists and data request as an interrupt source is enabled, i.e., the register bit DIRQEN in the register MSDC_CFG is set to '1', the register bit will be active. It will be reset when reading it. For software, data requests can be recognized by polling the register bit DRQ or by data request interrupt. Data request interrupts will be generated every FIFOTHD data transfers.

- **0** No Data Request Interrupt.
- **1** Data Request Interrupt occurs.

PINIRQ Pin Change Interrupt. The register bit indicates if any interrupt for memory card insertion/removal exists. Whenever memory card is inserted or removed and card detection interrupt is enabled, i.e., the register bit PINEN in the register MSDC_CFG is set to '1', the register bit will be set to '1'. It will be reset when the register is read.

- **0** Otherwise.
- **1** Card is inserted or removed.

SDCMDIRQ SD Bus CMD Interrupt. The register bit indicates if any interrupt for SD CMD line exists. Whenever interrupt for SD CMD line exists, i.e., any bit in the register SDC_CMDSTA is active, the register bit will be set to '1' if interrupt is enabled. It will be reset when the register is read.

- **0** No SD CMD line interrupt.
- **1** SD CMD line interrupt exists.

SDDATIRQ SD Bus DAT Interrupt. The register bit indicates if any interrupt for SD DAT line exists. Whenever interrupt for SD DAT line exists, i.e., any bit in the register SDC_ DATSTA is active, the register bit will be set to '1' if interrupt is enabled. It will be reset when the register is read.

- **0** No SD DAT line interrupt.
- **1** SD DAT line interrupt exists.

SDMCIRQ SD Memory Card Interrupt. The register bit indicates if any interrupt for SD Memory Card exists. Whenever interrupt for SD Memory Card exists, i.e., any bit in the register SDC_CSTA is active, the register bit will be set to '1' if interrupt is enabled. It will be reset when the register is read.

- **0** No SD Memory Card interrupt.
- **1** SD Memory Card interrupt exists.

MSIFIRQ MS Bus Interface Interrupt. The register bit indicates if any interrupt for MS Bus Interface exists. Whenever interrupt for MS Bus Interface exists, i.e., any bit in the register MSC_STA is active, the register bit will be set to '1' if interrupt is enabled. It will be reset when the register MSDC_STA or MSC_STA is read.

- **0** No MS Bus Interface interrupt.
- **1** MS Bus Interface interrupt exists.

SDR1BIRQ SD/MMC R1b Response Interrupt. The register bit will be active when a SD/MMC command with R1b response finishes and the DAT0 line has transition from busy to idle state. **Single block write commands with R1b response will cause the interrupt when the command completes no matter successfully or with CRC error. However, multi-block write commands with R1b response do not cause the interrupt**

聯發機密不得洩漏
MTK CONFIDENTIAL
NO DISCLOSURE

because multi-block write commands are always stopped by STOP_TRANS commands. STOP_TRANS commands (with R1b response) behind multi-block write commands will cause the interrupt. Single block read command with R1b response will cause the interrupt when the command completes but multi-block read commands do not. Note that STOP_TRANS commands (with R1b response) behind multi-block read commands will cause the interrupt.

MTK Confidential A (機密)

0 No interrupt for SD/MMC R1b response.

1 Interrupt for SD/MMC R1b response exists.

MSDC+000Ch MS/SD Memory Card Controller Data Register MSDC_DAT

Bit	31	30	29	28	27	26	25	24	23	22	21	20	19	18	17	16
Name	DATA[31:16]															
Type	R/W															
Bit	15	14	13	12	11	10	9	8	7	6	5	4	3	2	1	0
Name	DATA[15:0]															
Type	R/W															

The register is used to read/write data from/to FIFO inside MS/SD controller. Data access is in unit of 32 bits.

MSDC+0010h MS/SD Memory Card Pin Status Register MSDC_PS

Bit	31	30	29	28	27	26	25	24	23	22	21	20	19	18	17	16
Name								CMD	DAT							
Type								RO	RO							
Reset								-	-							
Bit	15	14	13	12	11	10	9	8	7	6	5	4	3	2	1	0
Name	CDDEBOUNCE											PINCHG	PIN0	POEN0	PIEN0	CDEN
Type	RW											RC	RO	R/W	R/W	R/W
Reset	0000											0	1	0	0	0

The register is used for card detection. When the memory card controller is powered on, and the system is powered on, the power for the memory card is still off unless power has been supplied by the PMIC. Meanwhile, pad for card detection defaults to pull down when the system is powered on. The scheme of card detection for MS is the same as that for SD/MMC.

For detecting card insertion, first pull up INS pin, and then enable card detection and input pin at the same time. After 32 cycles of controller clock, status of pin changes will emerge. For detecting card removal, just keep enabling card detection and input pin.

CDEN Card Detection Enable. The register bit is used to enable or disable card detection.

0 Card detection is disabled.

1 Card detection is enabled.

PIEN0 The register bit is used to control input pin for card detection.

0 Input pin for card detection is disabled.

1 Input pin for card detection is enabled.

POEN0 The register bit is used to control output of input pin for card detection.

0 Output of input pin for card detection is disabled.

1 Output of input pin for card detection is enabled.

PIN0 The register shows the value of input pin for card detection.

0 The value of input pin for card detection is logic low.

1 The value of input pin for card detection is logic high.

PINCHG Pin Change. The register bit indicates the status of card insertion/removal. If memory card is inserted or removed, the register bit will be set to '1' no matter pin change interrupt is enabled or not. It will be cleared when the register is read.

0 Otherwise.

聯發科技股份有限公司 MTK CONFIDENTIAL NO DISCLOSURE IWIT

1 Card is inserted or removed.

CDDEBOUNCE The register field specifies the time interval for card detection de-bounce. Its default value is 0. It means that de-bounce interval is 32 cycle time of 32KHz. The interval will extend one cycle time of 32KHz by increasing the counter by 1.

MTK Confidential A (機密)

DAT Memory Card Data Lines.

CMD Memory Card Command Lines.

MSDC+0014h MS/SD Memory Card Controller IO Control Register MSDC_IOCON

Bit	31	30	29	28	27	26	25	24	23	22	21	20	19	18	17	16
Name	DLT															
Type	R/W															
Reset	00000010															

Bit	15	14	13	12	11	10	9	8	7	6	5	4	3	2	1	0
Name	CMDRE						PRCFG3		SRCFG1	SRCFG0	ODCCFG1			ODCCFG0		
Type	R/W						R/W		R/W	R/W	R/W			R/W		
Reset	0						10		1	1	000			011		

The register specifies **Output Driving Capability** and **Slew Rate** of IO pads for MSDC. The reset value is suggestion setting. If output driving capability of the pins DAT0, DAT1, DAT2 and DAT3 is too large, it's possible to arise ground bounce and thus result in glitch on SCLK.

ODCCFG0 Output driving capability the pins CMD/BS and SCLK

000 4mA

010 8mA

100 12mA

110 16mA

ODCCFG1 Output driving capability the pins DAT0, DAT1, DAT2 and DAT3

000 4mA

010 8mA

100 12mA

110 16mA

SRCFG0 Output driving capability the pins CMD/BS and SCLK

0 Fast Slew Rate

1 Slow Slew Rate

SRCFG1 Output driving capability the pins DAT0, DAT1, DAT2 and DAT3

0 Fast Slew Rate

1 Slow Slew Rate

PRCFG3 Pull Up/Down Register Configuration for the pin INS. The default value is 10.

00 Pull up resistor and pull down resistor in the I/O pad of the pin INS are all disabled.

01 Pull down resistor in the I/O pad of the pin INS is enabled.

10 Pull up resistor in the I/O pad of the pin INS is enabled.

11 Use keeper of IO pad.

CMDRE The register bit is used to determine whether the host should latch response token (which is sent from card on CMD line) at rising edge or falling edge of serial clock.

0 Host latches response at rising edge of serial clock

1 Host latches response at falling edge of serial clock

DLT Data Latch Timing. The register is used for SW to select the latch timing on data line.

Figure 3 illustrates the data line latch timing. sclk_out is the serial clock output to card. div_clk is the internal clock used for generating divided clock. The number "1 2 1 2" means the current sclk_out is divided from div_clk by a ratio of 2. data_in is the output data from card, and latched_data(r)/(f) is the rising/falling edge latched data inside the host (configured by RED in MSDC_CFG). In this example,

IWIT 臨發機密不得洩漏 MTK CONFIDENTIAL NO DISCLOSURE IWIT

SCLKF(in MSDC_CFG) is set to 8'b0 which means the division ratio is 2, and DLT is set to 1. Note that the value of DLT CANNOT be set as 0 and its value should not exceed the division ratio (in the example, the division ratio is 2). Also note that, the latching time will be one div_clk later than the indicated DLT value and the falling edge is always half div_clk ahead from rising edge. The default value of DLT is set to 8'b2.

MTK Confidential A (機密)

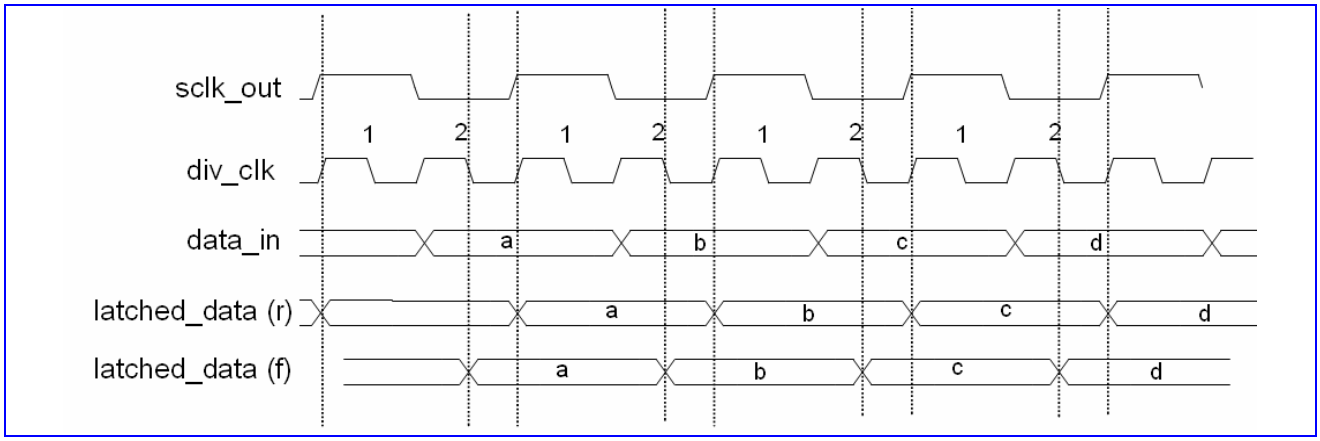

Figure 3 Illustration of data line latch timing

6.5.3.2 SD Memory Card Controller Register Definitions

MSDC+0020h SD Memory Card Controller Configuration Register SDC_CFG

Bit	31	30	29	28	27	26	25	24	23	22	21	20	19	18	17	16
Name	DTOC								WDOD				SDIO	MDLW8	MDLEN	SIEN
Type	R/W								R/W				R/W	R/W	R/W	R/W
Reset	00000000								0000				0	0	0	0
Bit	15	14	13	12	11	10	9	8	7	6	5	4	3	2	1	0
Name	BSYDLY				BLKLEN											
Type	R/W				R/W											
Reset	1000				00000000000											

聯發機密不得洩漏
MTK CONFIDENTIAL
NO DISCLOSURE
IWI

The register is used for configuring the MS/SD Memory Card Controller when it is configured as the host of SD Memory Card. If the controller is configured as the host of Memory Stick, the contents of the register have no impact on the operation of the controller. Note that SDC_CFG[31:16] can be accessed by 16-bit APB bus access.

BLKLEN It refers to Block Length. The register field is used to define the length of one block in unit of byte in a data transaction. The maximal value of block length is 2048 bytes.

000000000000 Reserved.
000000000001 Block length is 1 byte.
000000000010 Block length is 2 bytes.
…
011111111111 Block length is 2047 bytes.
100000000000 Block length is 2048 bytes.

BSYDLY The register field is only valid for the commands with R1b response. If the command has a response of R1b type, MS/SD controller must monitor the data line 0 for card busy status from the bit time that is two serial clock cycles after the command end bit to check if operations in SD/MMC Memory Card have finished. The register field is used to expand the time between the command end bit and end of detection period to detect card busy status. If time is up and there is no card busy status on data line 0, then the controller will abandon the detection.

0000 No extend.

MTK Confidential A (機密)

0001 Extend one more serial clock cycle.

0010 Extend two more serial clock cycles.

…

1111 Extend fifteen more serial clock cycle.

SIEN Serial Interface Enable. It should be enabled as soon as possible before any command.

0 Serial interface for SD/MMC is disabled.

1 Serial interface for SD/MMC is enabled.

MDLW8 Eight Data Line Enable. The register works when MDLEN is enabled. The register can be enabled only when MultiMediaCard 4.0 is applied and detected by software application.

0 4-bit Data line is enabled.

1 8-bit Data line is enabled.

SDIO SDIO Enable.

0 SDIO mode is disabled

1 SDIO mode is enabled

MDLEN Multiple Data Line Enable. The register can be enabled only when SD Memory Card is applied and detected by software application. It is the responsibility of the application to program the bit correctly when an MultiMediaCard is applied. If an MultiMediaCard is applied and 4-bit data line is enabled, then 4 bits will be output every serial clock. Therefore, data integrity will fail.

0 4-bit Data line is disabled.

1 4-bit Data line is enabled.

WDOD Write Data Output Delay. The period from finish of the response for the initial host write command or the last write data block in a multiple block write operation to the start bit of the next write data block requires at least two serial clock cycles. The register field is used to extend the period (Write Data Output Delay) in unit of one serial clock.

0000 No extend.

0001 Extend one more serial clock cycle.

0010 Extend two more serial clock cycles.

…

1111 Extend fifteen more serial clock cycle.

DTOC Data Timeout Counter. The period from finish of the initial host read command or the last read data block in a multiple block read operation to the start bit of the next read data block requires at least two serial clock cycles. The counter is used to extend the period (Read Data Access Time) in unit of 65,536 serial clock. See the register field description of the register bit RDINT for reference.

00000000 Extend 65,536 more serial clock cycle.

00000001 Extend 65,536x2 more serial clock cycle.

00000010 Extend 65,536x3 more serial clock cycle.

…

11111111 Extend 65,536x 256 more serial clock cycle.

IWIT
聯發機密不得洩漏
MTK CONFIDENTIAL
NO DISCLOSURE

MSDC+0024h SD Memory Card Controller Command Register SDC_CMD

Bit	31	30	29	28	27	26	25	24	23	22	21	20	19	18	17	16
Name																CMDFAIL
Type																R/W
Reset																0
Bit	15	14	13	12	11	10	9	8	7	6	5	4	3	2	1	0
Name	INTC	STOP	RW	DTYPE		IDRT	RSPTYP			BREAK	CMD					
Type	R/W	R/W	R/W	R/W		R/W	R/W			R/W	R/W					
Reset	0	0	0	00		0	000			0	000000					

The register defines a SD Memory Card command and its attribute. Before MS/SD controller issues a transaction onto SD bus, application shall specify other relative setting such as argument for command. After application writes the register, MS/SD controller will issue the corresponding transaction onto SD serial bus. If the command is GO_IDLE_STATE, the controller will have serial clock on SD/MMC bus run 128 cycles before issuing the command.

MTK Confidential A (機密)

CMD SD Memory Card command. It is totally 6 bits.

BREAK Abort a pending MMC GO_IRQ_MODE command. It is only valid for a pending GO_IRQ_MODE command waiting for MMC interrupt response.

- **0** Other fields are valid.
- **1** Break a pending MMC GO_IRQ_MODE command in the controller. Other fields are invalid.

RSPTYP The register field defines response type for the command. For commands with R1 and R1b response, the register SDC_CSTA (not SDC_STA) will update after response token is received. This register SDC_CSTA contains the status of the SD/MMC and it will be used as response interrupt sources. Note that if CMD7 is used with all 0's RCA then RSPTYP must be "000". And the command "GO_TO_IDLE" also have RSPTYP='000'.

- **000** There is no response for the command. For instance, broadcast command without response and GO_INACTIVE_STATE command.
- **001** The command has R1 response. R1 response token is 48-bit.
- **010** The command has R2 response. R2 response token is 136-bit.
- **011** The command has R3 response. Even though R3 is 48-bit response, but it does not contain CRC checksum.
- **100** The command has R4 response. R4 response token is 48-bit. (Only for MMC)
- **101** The command has R5 response. R5 response token is 48-bit. (Only for MMC)
- **110** The command has R6 response. R6 response token is 48-bit.
- **111** The command has R1b response. If the command has a response of R1b type, MS/SD controller must monitor the data line 0 for card busy status from the bit time that is two or four serial clock cycles after the command end bit to check if operations in SD/MMC Memory Card have finished. There are two cases for detection of card busy status. The first case is that the host stops the data transmission during an active write data transfer. The card will assert busy signal after the stop transmission command end bit followed by four serial clock cycles. The second case is that the card is in idle state or under a scenario of receiving a stop transmission command between data blocks when multiple block write command is in progress. The register bit is valid only when the command has a response token.

Note that the response type R4 and R5 mentioned above is for MMC only.

For SDIO, RSPTYP definition is different and shall be set to :

- **001** **(i) CMD5 of SDIO is to be issued. (Where the response is defined as R4 in SDIO spec)**
  (ii) CMD52 or CMD53 for READ is to be issued. (Where the response is defined as R5 in SDIO spec)
- **111** **CMD52 for I/O abort or CMD53 for WRITE is to be issued (Where the response is defined as R5 in SDIO spec)**

IDRT Identification Response Time. The register bit indicates if the command has a response with N_{ID} (that is, 5 serial clock cycles as defined in SD Memory Card Specification Part 1 Physical Layer Specification version 1.0) response time. The register bit is valid only when the command has a response token. Thus the register bit must be set to '1' for CMD2 (ALL_SEND_CID) and ACMD41 (SD_APP_OP_CMD).

- **0** Otherwise.
- **1** The command has a response with N_{ID} response time.

DTYPE The register field defines data token type for the command.

- **00** No data token for the command
- **01** Single block transaction
- **10** Multiple block transaction. That is, the command is a multiple block read or write command.

IWIT 聯發機密不得洩漏 MTK CONFIDENTIAL NO DISCLOSURE IWIT

11 Stream operation. It only shall be used when an MultiMediaCard is applied.

RW The register bit defines the command is a read command or write command. The register bit is valid only when the command will cause a transaction with data token.

MTK Confidential A (機密)

0 The command is a read command.

1 The command is a write command.

STOP The register bit indicates if the command is a stop transmission command. **It should be set to 1 when CMD12 (SD/MMC) or CMD52 with I/O abort (SDIO) is to be issued.**

0 The command is not a stop transmission command.

1 The command is a stop transmission command.

INTC The register bit indicates if the command is GO_IRQ_STATE. If the command is GO_IRQ_STATE, the period between command token and response token will not be limited.

0 The command is not GO_IRQ_STATE.

1 The command is GO_IRQ_STATE.

CMDFAIL The register bit is used for controlling SDIO interrupt period when CRC error or Command/Data timeout condition occurs. It is useful only when SDIO 4-bit mode is activated.

0 SDIO Interrupt period will re-start after a stop command (CMD12) or I/O abort command (CMD52) is issued.

1 SDIO Interrupt period will re-start whenever DAT line is not busy.

MSDC+0028h SD Memory Card Controller Argument Register SDC_ARG

Bit	31	30	29	28	27	26	25	24	23	22	21	20	19	18	17	16
Name	ARG [31:16]															
Type	R/W															
Bit	15	14	13	12	11	10	9	8	7	6	5	4	3	2	1	0
Name	ARG [15:0]															
Type	R/W															

The register contains the argument of the SD/MMC Memory Card command.

MSDC+002Ch SD Memory Card Controller Status Register SDC_STA

Bit	15	14	13	12	11	10	9	8	7	6	5	4	3	2	1	0
Name	WP											R1BSY	RSV	DATBUSY	CMDBUSY	SDCBUSY
Type	R											RO	RO	RO	RO	RO
Reset	-											0	0	0	0	0

The register contains various status of MS/SD controller as the controller is configured as the host of SD Memory Card.

SDCBUSY The register field indicates if MS/SD controller is busy, that is, any transmission is going on CMD or DAT line on SD bus.

0 MS/SD controller is idle.

1 MS/SD controller is busy.

CMDBUSY The register field indicates if any transmission is going on CMD line on SD bus.

0 No transmission is going on CMD line on SD bus.

1 There exists transmission going on CMD line on SD bus.

DATBUSY The register field indicates if any transmission is going on DAT line on SD bus. **For those commands without data but still involving DAT line, the register bit is useless. For example, if an Erase command is issued, then checking if the register bit is '0' before issuing next command with data would not guarantee that the controller is idle. In this situation, use the register bit SDCBUSY.**

0 No transmission is going on DAT line on SD bus.

1 There exists transmission going on DAT line on SD bus.

R1BSY The register field shows the status of DAT line 0 for commands with R1b response.

聯發機密不得洩漏
MTK CONFIDENTIAL
NO DISCLOSURE

0 SD/MMC Memory card is not busy.

1 SD/MMC Memory card is busy.

MTK Confidential A (機密)

WP It is used to detect the status of Write Protection Switch on SD Memory Card. The register bit shows the status of Write Protection Switch on SD Memory Card. There is no default reset value. The pin WP (Write Protection) is also only useful while the controller is configured for SD Memory Card.

1 Write Protection Switch ON. It means that memory card is desired to be write-protected.

0 Write Protection Switch OFF. It means that memory card is writable.

MSDC+0030h SD Memory Card Controller Response Register 0 SDC_RESP0

Bit	31	30	29	28	27	26	25	24	23	22	21	20	19	18	17	16
Name	RESP [31:16]															
Type	RO															
Bit	15	14	13	12	11	10	9	8	7	6	5	4	3	2	1	0
Name	RESP [15:0]															
Type	RO															

The register contains parts of the last SD/MMC Memory Card bus response. See description for the register field SDC_RESP3.

MSDC+0034h SD Memory Card Controller Response Register 1 SDC_RESP1

Bit	31	30	29	28	27	26	25	24	23	22	21	20	19	18	17	16
Name	RESP [63:48]															
Type	RO															
Bit	15	14	13	12	11	10	9	8	7	6	5	4	3	2	1	0
Name	RESP [47:32]															
Type	RO															

The register contains parts of the last SD/MMC Memory Card bus response. See description for the register field SDC_RESP3.

MSDC+0038h SD Memory Card Controller Response Register 2 SDC_RESP2

Bit	31	30	29	28	27	26	25	24	23	22	21	20	19	18	17	16
Name	RESP [95:80]															
Type	RO															
Bit	15	14	13	12	11	10	9	8	7	6	5	4	3	2	1	0
Name	RESP [79:64]															
Type	RO															

The register contains parts of the last SD/MMC Memory Card bus response. See description for the register field SDC_RESP3.

MSDC+003Ch SD Memory Card Controller Response Register 3 SDC_RESP3

Bit	31	30	29	28	27	26	25	24	23	22	21	20	19	18	17	16
Name	RESP [127:112]															
Type	RO															
Bit	15	14	13	12	11	10	9	8	7	6	5	4	3	2	1	0
Name	RESP [111:96]															
Type	RO															

The register contains parts of the last SD/MMC Memory Card bus response. The register fields SDC_RESP0, SDC_RESP1, SDC_RESP2 and SDC_RESP3 compose the last SD/MMC Memory card bus response. For response of type R2, that is, response of the command ALL_SEND_CID, SEND_CSD and SEND_CID, only bit 127 to 0 of response token is stored in the register field SDC_RESP0, SDC_RESP1, SDC_RESP2 and SDC_RESP3. For response of other types, only bit 39 to 8 of response token is stored in the register field SDC_RESP0.

聯發機密不得洩漏
MTK CONFIDENTIAL
NO DISCLOSURE

MSDC+0040h SD Memory Card Controller Command Status Register SDC_CMDSTA

MTK Confidential A (機密)

Bit	15	14	13	12	11	10	9	8	7	6	5	4	3	2	1	0
Name													MMCIRQ	RSPCRCERR	CMDTO	CMDRDY
Type													RC	RC	RC	RC
Reset													0	0	0	0

The register contains the status of MS/SD controller during command execution and that of MS/SD bus protocol after command execution when MS/SD controller is configured as the host of SD/MMC Memory Card. The register will also be used as interrupt sources. The register will be cleared when reading the register. Meanwhile, if interrupt is enabled and thus interrupt caused by the register is generated, reading the register will deassert the interrupt.

CMDRDY For command without response, the register bit will be '1' once the command completes on SD/MMC bus. For command with response, the register bit will be '1' whenever the command is issued onto SD/MMC bus and its corresponding response is received **without CRC error**.

0 Otherwise.

1 Command with/without response finish successfully without CRC error.

CMDTO Timeout on CMD detected. A '1' indicates that MS/SD controller detected a timeout condition while waiting for a response on the CMD line.

0 Otherwise.

1 MS/SD controller detected a timeout condition while waiting for a response on the CMD line.

RSPCRCERR CRC error on CMD detected. A '1' indicates that MS/SD controller detected a CRC error **after reading a response from the CMD line.**

0 Otherwise.

1 MS/SD controller detected a CRC error after reading a response from the CMD line.

MMCIRQ MMC requests an interrupt. A '1' indicates that a MMC supporting command class 9 issued an interrupt request.

0 Otherwise.

1 A '1' indicates that a MMC supporting command class 9 issued an interrupt request.

聯發機密不得洩漏
MTK CONFIDENTIAL

MSDC+0044h SD Memory Card Controller Data Status Register SDC_DATSTA

Bit	15	14	13	12	11	10	9	8	7	6	5	4	3	2	1	0
Name														DATCRCERR	DATTO	BLKDONE
Type														RC	RC	RC
Reset														0	0	0

The register contains the status of MS/SD controller during data transfer on DAT line(s) when MS/SD controller is configured as the host of SD/MMC Memory Card. The register also will be used as interrupt sources. The register will be cleared when reading the register. Meanwhile, if interrupt is enabled and thus interrupt caused by the register is generated, reading the register will deassert the interrupt.

BLKDONE The register bit indicates the status of data block transfer.

0 Otherwise.

1 A data block was successfully transferred.

DATTO Timeout on DAT detected. A '1' indicates that MS/SD controller detected a timeout condition while waiting for data token on the DAT line.

0 Otherwise.

1 MS/SD controller detected a timeout condition while waiting for data token on the DAT line.

DATCRCERR CRC error on DAT detected. A '1' indicates that MS/SD controller detected a CRC error after reading a block of data from the DAT line or SD/MMC signaled a CRC error after writing a block of data to the DAT line.

MTK Confidential A (機密)

0 Otherwise.

1 MS/SD controller detected a CRC error after reading a block of data from the DAT line or SD/MMC signaled a CRC error after writing a block of data to the DAT line.

MSDC+0048h SD Memory Card Status Register SDC_CSTA

Bit	31	30	29	28	27	26	25	24	23	22	21	20	19	18	17	16
Name	CSTA [31:16]															
Type	RC															
Reset	0000000000000000															
Bit	15	14	13	12	11	10	9	8	7	6	5	4	3	2	1	0
Name	CSTA [15:0]															
Type	RC															
Reset	0000000000000000															

After commands with R1 and R1b response this register contains the status of the SD/MMC card and it will be used as response interrupt sources. In all register fields, logic high indicates error and logic low indicates no error. The register will be cleared when reading the register. Meanwhile, if interrupt is enabled and thus interrupt caused by the register is generated, reading the register will deassert the interrupt.

CSTA31 **OUT_OF_RANGE**. The command's argument was out of the allowed range for this card.

CSTA30 **ADDRESS_ERROR**. A misaligned address that did not match the block length was used in the command.

CSTA29 **BLOCK_LEN_ERROR**. The transferred block length is not allowed for this card, or the number of transferred bytes does not match the block length.

CSTA28 **ERASE_SEQ_ERROR**. An error in the sequence of erase commands occurred.

CSTA27 **ERASE_PARAM**. An invalid selection of write-blocks for erase occurred.

CSTA26 **WP_VIOLATION**. Attempt to program a write-protected block.

CSTA25 Reserved. Return zero.

CSTA24 **LOCK_UNLOCK_FAILED**. Set when a sequence or password error has been detected in lock/unlock card command or if there was an attempt to access a locked card.

CSTA23 **COM_CRC_ERROR**. The CRC check of the previous command failed.

CSTA22 **ILLEGAL_COMMAND**. Command not legal for the card state.

CSTA21 **CARD_ECC_FAILED**. Card internal ECC was applied but failed to correct the data.

CSTA20 **CC_ERROR**. Internal card controller error.

CSTA19 **ERROR**. A general or an unknown error occurred during the operation.

CSTA18 **UNDERRUN**. The card could not sustain data transfer in stream read mode.

CSTA17 **OVERRUN**. The card could not sustain data programming in stream write mode.

CSTA16 **CID/CSD_OVERWRITE**. It can be either one of the following errors: 1. The CID register has been already written and cannot be overwritten 2. The read only section of the CSD does not match the card. 3. An attempt to reverse the copy (set as original) or permanent WP (unprotected) bits was made.

CSTA[15:4] Reserved. Return zero.

CSTA3 **AKE_SEQ_ERROR**. Error in the sequence of authentication process

CSTA[2:0] Reserved. Return zero.

MSDC+004Ch SD Memory Card IRQ Mask Register 0 SDC_IRQMASK 0

Bit	31	30	29	28	27	26	25	24	23	22	21	20	19	18	17	16
Name	IRQMASK [31:16]															
Type	R/W															

聯發機密不得洩漏
MTK CONFIDENTIAL
NO DISCLOSURE

Reset	0000000000000000															
Bit	15	14	13	12	11	10	9	8	7	6	5	4	3	2	1	0
Name	IRQMASK [15:0]															
Type	R/W															
Reset	0000000000000000															

MTK CONFIDENTIAL (機密)

The register contains parts of SD Memory Card Interrupt Mask Register. See the register description of the register SDC_IRQMASK1 for reference. The register will mask interrupt sources from the register SDC_CMDSTA and SDC_DATSTA. IRQMASK[15:0] is for SDC_CMDSTA and IRQMASK[31:16] for SDC_DATSTA. A '1' in some bit of the register will mask the corresponding interrupt source with the same bit position. For example, if IRQMASK[0] is '1' then interrupt source from the register field CMDRDY of the register SDC_ CMDSTA will be masked. A '0' in some bit will not cause interrupt mask on the corresponding interrupt source from the register SDC_CMDSTA and SDC_DATSTA.

IWIT

MSDC+0050h SD Memory Card IRQ Mask Register 1 — SDC_IRQMASK1

Bit	31	30	29	28	27	26	25	24	23	22	21	20	19	18	17	16
Name	IRQMASK [63:48]															
Type	R/W															
Reset	0000000000000000															
Bit	15	14	13	12	11	10	9	8	7	6	5	4	3	2	1	0
Name	IRQMASK [47:32]															
Type	R/W															
Reset	0000000000000000															

聯發機密不得洩漏

The register contains parts of SD Memory Card Interrupt Mask Register. The registers SDC_IRQMASK1 and SDC_IRQMASK0 compose the SD Memory Card Interrupt Mask Register. The register will mask interrupt sources from the register SDC_CSTA. A '1' in some bit of the register will mask the corresponding interrupt source with the same bit position. For example, if IRQMASK[63] is '1' then interrupt source from the register field OUT_OF_RANGE of the register SDC_ CSTA will be masked. A '0' in some bit will not cause interrupt mask on the corresponding interrupt source from the register SDC_ CSTA.

MTK CONFIDENTIAL

MSDC+0054h SDIO Configuration Register — SDIO_CFG

Bit	31	30	29	28	27	26	25	24	23	22	21	20	19	18	17	16
Name																
Type																
Reset																
Bit	15	14	13	12	11	10	9	8	7	6	5	4	3	2	1	0
Name														DSBSEL	INTSEL	INTEN
Type														R/W	R/W	R/W
Reset														0	0	0

NOT TO BE DISCLOSED

The register is used to configure functionality for SDIO.

INTEN Interrupt enable for SDIO.

- **0** Disable
- **1** Enable

INTSEL Interrupt Signal Selection

- **0** Use data line 1 as interrupt signal
- **1** Use data line 5 as interrupt signal

DSBSEL Data Block Start Bit Selection.

- **0** Use data line 0 as start bit of data block and other data lines are ignored.
- **1** Start bit of a data block is received only when data line 0-3 all become low.

IWIT

MSDC+0058h SDIO Status Register SDIO_STA

Bit	31	30	29	28	27	26	25	24	23	22	21	20	19	18	17	16
Name																
Type																
Reset																
Bit	15	14	13	12	11	10	9	8	7	6	5	4	3	2	1	0
Name																IRQ
Type																RO
Reset																0

MTK Confidential A (機密)

6.5.3.3 Memory Stick Controller Register Definitions

MSDC+0060h Memory Stick Controller Configuration Register MSC_CFG

Bit	15	14	13	12	11	10	9	8	7	6	5	4	3	2	1	0
Name	PMODE	PRED											BUSYCNT			SIEN
Type	R/W	R/W											R/W			R/W
Reset	0	0											101			0

The register is used for Memory Stick Controller Configuration when MS/SD controller is configured as the host of Memory Stick.

SIEN Serial Interface Enable. It should be enabled as soon as possible before any command.

- **0** Serial interface for Memory Stick is disabled.
- **1** Serial interface for Memory Stick is enabled.

BUSYCNT RDY timeout setting in unit of serial clock cycle. The register field is set to the maximum BUSY timeout time (set value x 4 +2) to wait until the RDY signal is output from the card. RDY timeout error detection is not performed when BUSYCNT is set to 0. The initial value is 0x5. That is, BUSY signal exceeding 5x4+2=22 serial clock cycles causes a RDY timeout error.

- **000** Not detect RDY timeout
- **001** BUSY signal exceeding 1x4+2=6 serial clock cycles causes a RDY timeout error.
- **010** BUSY signal exceeding 2x4+2=10 serial clock cycles causes a RDY timeout error.
- **…**
- **111** BUSY signal exceeding 7x4+2=30 serial clock cycles causes a RDY timeout error.

PRED Parallel Mode Rising Edge Data. The register field is only valid in parallel mode, that is, MSPRO mode. In parallel mode, data must be driven and latched at the falling edge of serial clock on MS bus. In order to mitigate hold time issue, the register can be set to '1' such that write data is driven by MSDC at the rising edge of serial clock on MS bus.

- **0** Write data is driven by MSDC at the falling edge of serial clock on MS bus.
- **1** Write data is driven by MSDC at the rising edge of serial clock on MS bus.

PMODE Memory Stick PRO Mode.

- **0** Use Memory Stick serial mode.
- **1** Use Memory Stick parallel mode.

MSDC+0064h Memory Stick Controller Command Register MSC_CMD

Bit	15	14	13	12	11	10	9	8	7	6	5	4	3	2	1	0
Name	PID						DATASIZE									
Type	R/W						R/W									
Reset	0000						0000000000									

The register is used for issuing a transaction onto MS bus. Transaction on MS bus is started by writing to the register MSC_CMD. The direction of data transfer, that is, read or write transaction, is extracted from the register field PID.

聯發機密不得洩漏
MTK CONFIDENTIAL
NO DISCLOSURE

16-bit CRC will be transferred for a write transaction even if the register field DATASIZE is programmed as zero under the condition where the register field NOCRC in the register MSDC_CFG is '0'. If the register field NOCRC in the register MSDC_CFG is '1' and the register field DATASIZE is programmed as zero, then writing to the register MSC_CMD will not induce transaction on MS bus. The same applies for when the register field RDY in the register MSC_STA is '0'.

MTK Confidential A (機密)

DATASIZE Data size in unit of byte for the current transaction.

- **0000000000** Data size is 0 byte.
- **0000000001** Data size is one byte.
- **0000000010** Data size is two bytes.
- **…**
- **0111111111** Data size is 511 bytes.
- **1000000000** Data size is 512 bytes.

PID Protocol ID. It is used to derive Transfer Protocol Code (TPC). The TPC can be derived by cascading PID and its reverse version. For example, if PID is 0x1, then TPC is 0x1e, that is, 0b0001 cascades 0b1110. In addition, the direction of the bus transaction can be determined from the register bit 15, that is, PID[3].

MSDC+0068h Memory Stick Controller Auto Command Register MSC_ACMD

Bit	15	14	13	12	11	10	9	8	7	6	5	4	3	2	1	0
Name	APID					ADATASIZE										ACEN
Type	R/W					R/W										R/W
Reset	0111					0000000001										0

The register is used for issuing a transaction onto MS bus automatically after the MS command defined in MSC_CMD completed on MS bus. Auto Command is a function used to automatically execute a command like GET_INT or READ_REG for checking status after SET_CMD ends. If auto command is enabled, the command set in the register will be executed once the INT signal on MS bus is detected. After auto command is issued onto MS bus, the register bit ACEN will become disabled automatically. Note that if auto command is enabled then the register bit RDY in the register MSC_STA caused by the command defined in MSC_CMD will be suppressed until auto command completes. Note that the register field ADATASIZE cannot be set to zero, or the result will be unpredictable.

聯發機密不得洩漏
MTK CONFIDENTIAL
NO DISCLOSURE

ACEN Auto Command Enable.

- **0** Auto Command is disabled.
- **1** Auto Command is enabled.

ADATASIZE Data size in unit of byte for Auto Command. Initial value is 0x01.

- **0000000000** Data size is 0 byte.
- **0000000001** Data size is one byte.
- **0000000010** Data size is two bytes.
- **…**
- **0111111111** Data size is 511 bytes.
- **1000000000** Data size is 512 bytes.

APID Auto Command Protocol ID. It is used to derive Transfer Protocol Code (TPC). Initial value is GSET_INT(0x7).

MSDC+006Ch Memory Stick Controller Status Register MSC_STA

Bit	15	14	13	12	11	10	9	8	7	6	5	4	3	2	1	0
Name	CMDNK	BREQ	ERR	CED								HSRDY	CRCER	TOER	SIF	RDY
Type	R	R	R	R								RO	RO	RO	RO	RO
Reset	0	0	0	0								0	0	0	0	1

The register contains various status of Memory Stick Controller, that is, MS/SD controller is configured as Memory Stick Controller. These statuses can be used as interrupt sources. Reading the register will NOT clear it. The register will be cleared whenever a new command is written to the register MSC_CMD.

MTK Confidential A (機密)

RDY The register bit indicates the status of transaction on MS bus. The register bit will be cleared when writing to the command register MSC_CMD.

- **0** Otherwise.
- **1** A transaction on MS bus is ended.

SIF The register bit indicates the status of serial interface. If an interrupt is active on MS bus, the register bit will be active. Note the difference between the signal RDY and SIF. When parallel mode is enabled, the signal SIF will be active whenever any of the signal CED, ERR, BREQ and CMDNK is active. **In order to separate interrupts caused by the signals RDY and SIF, the register bit SIF will not become active until the register MSDC_INT is read once. That is, the sequence for detecting the register bit SIF by polling is as follows:**

1. Detect the register bit RDY of the register MSC_STA
2. Read the register MSDC_INT
3. Detect the register bit SIF of the register MSC_STA

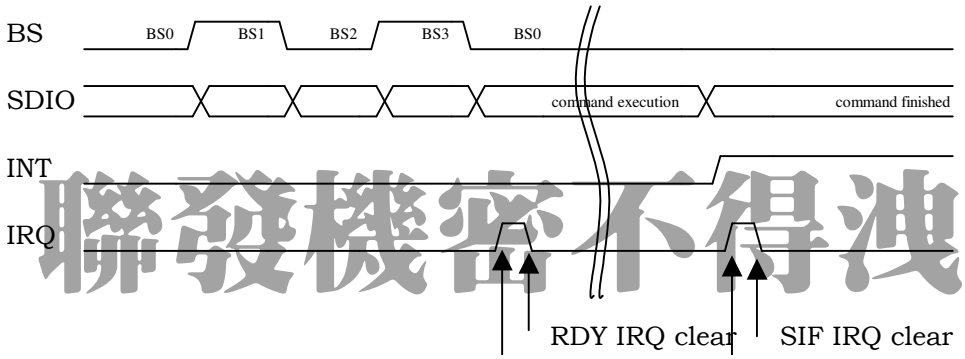

- **0** Otherwise.
- **1** An interrupt is active on MS bus

TOER The register bit indicates if a BUSY signal timeout error takes place. When timeout error occurs, the signal BS will become logic low '0'. The register bit will be cleared when writing to the command register MSC_CMD.

- **0** No timeout error.
- **1** A BUSY signal timeout error takes place. The register bit RDY will also be active.

CRCER The register bit indicates if a CRC error occurs while receiving read data. The register bit will be cleared when writing to the command register MSC_CMD.

- **0** Otherwise.
- **1** A CRC error occurs while receiving read data. The register bit RDY will also be active.

HSRDY The register bit indicates the status of handshaking on MS bus. The register bit will be cleared when writing to the command register MSC_CMD.

- **0** Otherwise.
- **1** A Memory Stick card responds to a TPC by RDY.

CED The register bit is only valid when parallel mode is enabled. In fact, it's value is from DAT[0] when serial interface interrupt takes place. See Format Specification version 2.0 of Memory Stick Standard (Memory Stick PRO) for more details.

- **0** Command does not terminate.
- **1** Command terminates normally or abnormally.

ERR The register bit is only valid when parallel mode is enabled. In fact, it's value is from DAT[1] when serial interface interrupt takes place. See Format Specification version 2.0 of Memory Stick Standard (Memory Stick PRO) for more details.

IWIT
聯發機密不得洩漏
MTK CONFIDENTIAL
NO DISCLOSURE
IWIT

0 Otherwise.

1 Indicate memory access error during memory access command.

MTK Confidential A (機密)

BREQ The register bit is only valid when parallel mode is enabled. In fact, it's value is from DAT[2] when serial interface interrupt takes place. See Format Specification version 2.0 of Memory Stick Standard (Memory Stick PRO) for more details.

0 Otherwise.

1 Indicate request for data.

CMDNK The register bit is only valid when parallel mode is enabled. In fact, it's value is from DAT[3] when serial interface interrupt takes place. See Format Specification version 2.0 of Memory Stick Standard (Memory Stick PRO) for more details.

0 Otherwise

1 Indicate non-recognized command.

6.5.4 Application Notes

6.5.4.1 Initialization Procedures After Power On

```
Disable power down control for MSDC module
```

Remember to power on MSDC module before starting any operation to it.

6.5.4.2 Card Detection Procedures

The pseudo code is as follows:

```
MSDC_CFG.PRCFG0 = 2'b10
MSDC_PS = 2'b11
MSDC_CFG.VDDPD = 1
if(MSDC_PS.PINCHG) { // card is inserted
    . . .
}
```

The pseudo code segment perform the following tasks:

1. First pull up CD/DAT3 (INS) pin.
2. Enable card detection and input pin at the same time.
3. Turn on power for memory card.
4. Detect insertion of memory card.

6.5.4.3 Notes on Commands

For MS, check if MSC_STA.RDY is '1' before issuing any command.

For SD/MMC, if the command desired to be issued involves data line, for example, commands with data transfer or R1b response, check if SDC_STA.SDCBUSY is '0' before issuing. If the command desired to be issued does not involve data line, only check if SDC_STA.CMDBUSY is '0' before issuing.

6.5.4.4 Notes on Data Transfer

- For SD/MMC, if multiple-block-write command is issued then only issue STOP_TRANS command inter-blocks instead of intra-blocks.
- Once SW decides to issue STOP_TRANS commands, no more data transfer from or to the controller.

IWIT
聯發機密不得洩漏
MTK CONFIDENTIAL
NO DISCLOSURE
IWIT

6.5.4.5 Notes on Frequency Change

Before changing the frequency of serial clock on MS/SD/MMC bus, it is necessary to disable serial interface of the controller. That is, set the register bit SIEN of the register SDC_CFG to '0' for SD/MMC controller, and set the register bit SIEN of the register MSC_CFG to '0' for Memory Stick controller. Serial interface of the controller needs to be enabled again before starting any operation to the memory card.

6.5.4.6 Notes on Response Timeout

If a read command doest not receive response, that is, it terminates with a timeout, then register SDC_DATSTA needs to be cleared by reading it. The register bit "DATTO" should be active. However, it may take a while before the register bit becomes active. The alternative is to send the STOP_TRANS command. However, this method will receive response with illegal-command information. Also, remember to check if the register bit SDC_STA.CMDBUSY is active before issuing the STOP_TRANS command. The procedure is as follows:

1. Read command => response time out
2. Issue STOP_TRANS command => Get Response
3. Read register SDC_DATSTA to clear it

6.5.4.7 Source or Destination Address is not word-aligned

It is possible that the source address is not word-aligned when data move from memory to MSDC. Similarly, destination address may be not word-aligned when data move from MSDC to memory. This can be solved by setting DMA byte-to-word functionality.

1. DMAn_CON.SIZE=0
2. DMAn_CON.BTW=1
3. DMAn_CON.BURST=2 (or 4)
4. DMAn_COUNT=byte number instead of word number
5. fifo threshold setting must be 1 (or 2), depending on DMAn_CON.BURST

Note n=4 ~ 11

6.5.4.8 Miscellaneous notes

- Siemens MMC card: When a write command is issued and followed by a STOP_TRANS command, Siemens MMC card will de-assert busy status even though flash programming has not yet finished. Software must use "Get Status" command to make sure that flash programming finishes.

6.6 Graphic Memory Controller

6.6.1 General Description

Graphic memory controller provides channels to allow graphic engines to access SYSRAM and External Memory. Simple Request-Acknowledge handshaking scheme is employed here to ease the complexity of memory access control circuitry in each graphic engine.

IWIT
聯發機密不得洩漏
MTK CONFIDENTIAL
NO DISCLOSURE
IWIT

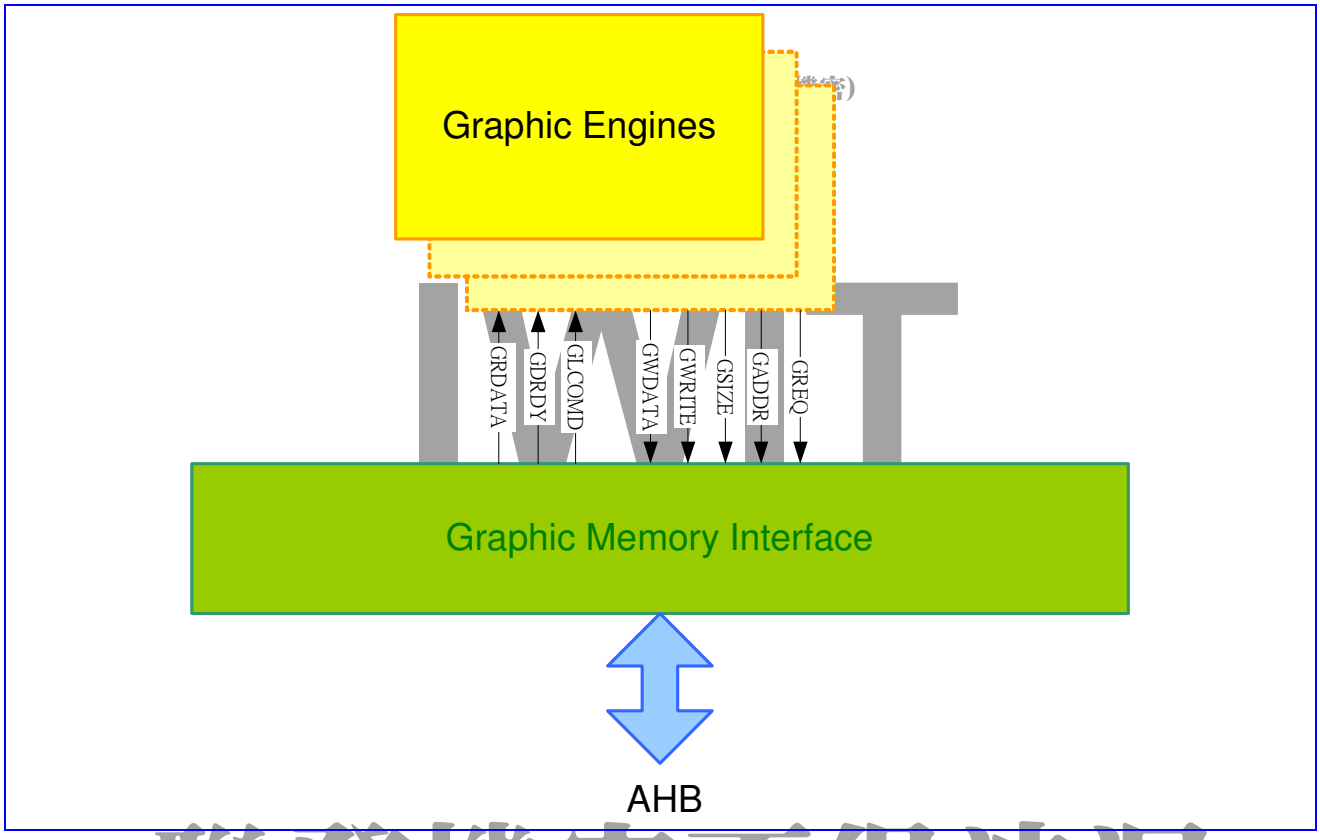

Figure 68 Graphic memory controller

聯發機密不得洩漏

6.6.2 Register Definitions

Register Address	Register Function	Acronym
CONFG + 0600h	GMC Memory Bank Control Register	SYSRAM_CON

MTK CONFIDENTIAL

Table 43 GMC Registers

NO DISCLOSURE

CONFG+0600h GMC Memory Bank Control Register SYSRAM_CON

Bit	15	14	13	12	11	10	9	8	7	6	5	4	3	2	1	0
Name	ASST							PAUSE								
Type	RO							R/W								
Reset	0							0								

SYSRAM Bank mapping of GMC ports.

PAUSE To pause EMI port access. Any access to the address range of EMI will be blocked if this bit is set.

ASST GMC assertion. The value of the register bit is “1” if there is abnormal access to the address range of 0x4001_0000~0x4003_ffff.

IWIT

6.7 Camera Interface

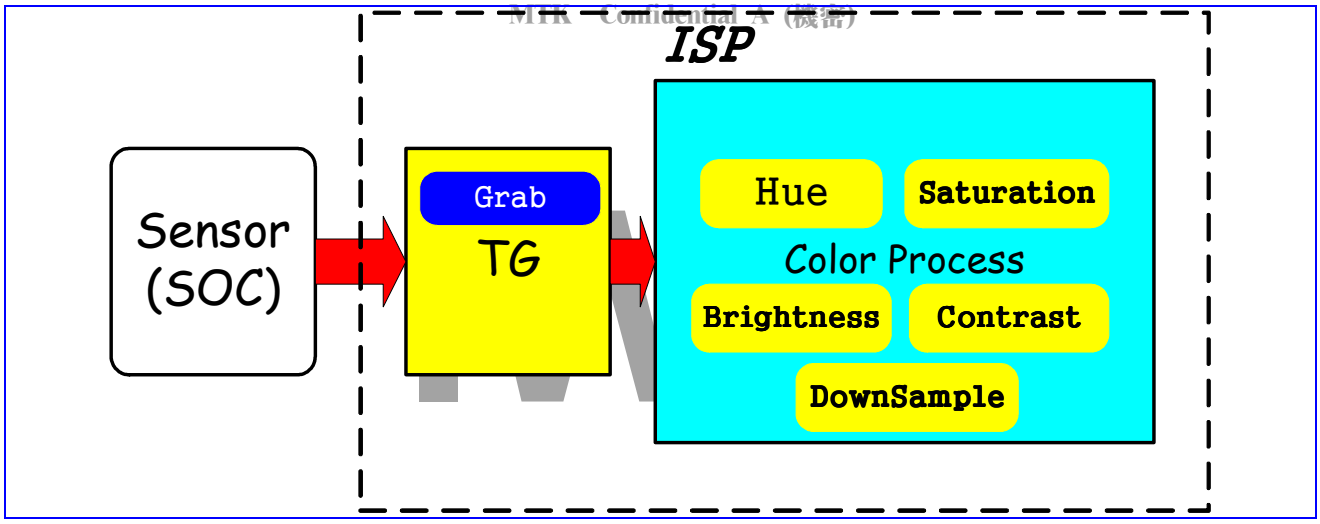

MT6225 ISP support VGA Sensor YUV422/RGB565 interface. Included Functions are Brightness、Contrast、Saturation、Hue Tuning and Input Image Grab Window. Down Sample Function can be used before image output from ISP.

6.7.1 Register Table

REGISTER ADDRESS	REGISTER NAME	SYNONYM
CAM + 0000h	TG Phase Counter Register	CAM_PHSCNT
CAM + 0004h	Sensor Size Configuration Register	CAM_CAMWIN
CAM + 0008h	TG Grab Range Start/End Pixel Configuration Register	CAM_GRABCOL
CAM + 000Ch	TG Grab Range Start/End Line Configuration Register	CAM_GRABROW
CAM + 0010h	Sensor Mode Configuration Register	CAM_CSMODE
CAM + 0018h	View Finder Mode Control Register	CAM_VFCON
CAM + 001Ch	Camera Module Interrupt Enable Register	CAM_INTEN
CAM + 0020h	Camera Module Interrupt Status Register	CAM_INTSTA
CAM + 0024h	Camera Module Path Config Register	CAM_PATH
CAM + 0028h	Camera Module Input Address Register	CAM_INADDR
CAM + 002Ch	Camera Module Output Address Register	CAM_OUTADDR
CAM + 0030h	Preprocessing Control Register 1	CAM_CTRL1
CAM + 00B8h	Y Channel Configuration Register	CAM_YCHAN
CAM + 00BCh	UV Channel Configuration Register	CAM_UVCHAN
CAM + 00C0h	Space Convert YUV Register 1	CAM_SCONV1
CAM + 00C4h	Space Convert YUV Register 2	CAM_SCONV2
CAM + 0128h	Vertical Subsample Control Register	CAM_VSUB
CAM + 012Ch	Horizontal Subsample Control Register	CAM_HSUB
CAM + 0174h	Result Window Vertical Size Register	RWINV_SEL
CAM + 0178h	Result Window Horizontal Size Register	RWINH_SEL
CAM + 0180h	Camera Interface Debug Mode Control Register	CAM_DEBUG
CAM + 0184h	Camera Module Debug Information Write Out Destination Address	CAM_DSTADDR
CAM + 0188h	Camera Module Debug Information Last Transfer Destination Address	CAM_LSTADDR

聯發機密不得洩漏
MTK CONFIDENTIAL
NO DISCLOSURE
MTK Confidential A (機密)

CAM + 018Ch	Camera Module Frame Buffer Transfer Out Count Register	CAM_XFERCNT
CAM + 0190h	Sensor Test Module Configuration Register 1	CAM_MDLCFG1
CAM + 0194h	Sensor Test Module Configuration Register 2	CAM_MDLCFG2
CAM + 01D8h	Cam Reset Register	CAM_RESET
CAM + 01DCh	TG Status Register	TG_STATUS
CAM + 0248h	GMC Debug Register	CAM_GMCDEBUG
CAM + 0274h	Cam Version Register	CAM_VERSION

Table 44 Camera Interface Register Map

MTK Confidential A (機密)

6.7.1.1 TG Register Definitions

CAM+0000h TG Phase Counter Register **CAM_PHSCNT**

Bit	31	30	29	28	27	26	25	24	23	22	21	20	19	18	17	16
Name	PCEN		CLKEN	CLKPOL	CLKCNT				CLKRS				CLKFL			
Type	R/W		R/W	R/W	R/W				R/W				R/W			
Reset	0		0	0	1				0				1			
Bit	15	14	13	12	11	10	9	8	7	6	5	4	3	2	1	0
Name	HVALID_EN	PXCLK_EN	PXCLK_INV	PXCLK_IN	CLKFL_POL			TGCLK_SEL	PIXCNT				DLATCH			
Type	R/W	R/W	R/W	R/W	R/W			R/W	R/W				R/W			
Reset	0	0	0	0	0			0	1				1			

PCEN TG phase counter enable control

CLKEN Enable sensor master clock (mclk) output to sensor

CLKPOL Sensor master clock polarity control

CLKCNT Sensor master clock frequency divider control.

Sensor master clock will be 52Mhz/CLKCNT, where CLKCNT >=1.

CLKRS Sensor master clock rising edge control

CLKFL Sensor master clock falling edge control

HVALID_EN Sensor hvalid or href enable

PXCLK_EN Sensor clock input monitor.

PXCLK_INV Pixel clock inverse

PXCLK_IN Pixel clock sync enable. If sensor master based clock is 48 Mhz, PXCLK_IN must be enabled.

CLKFL_POL Sensor clock falling edge polarity

TGCLK_SEL Sensor master based clock selection (0: 52 Mhz, 1: 48 Mhz)

PIXCNT Sensor data latch frequency control

DLATCH Sensor data latch position control

Example waveform(CLKCNT=1,CLKRS=0,CLKFL=1,PIXCNT=3,DLATCH=2)

聯發機密不得洩漏
MTK CONFIDENTIAL
NO DISCLOSURE
IWIT

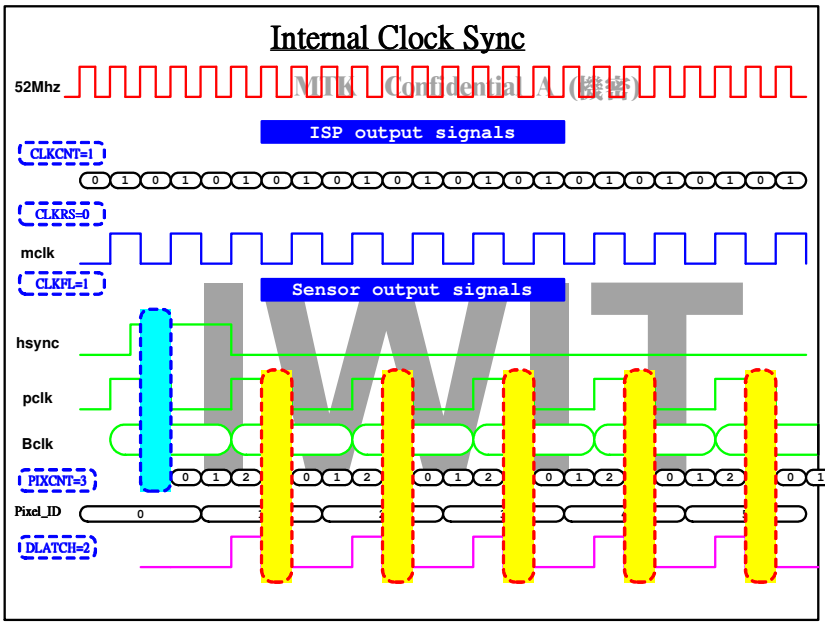

CAM+0004h Sensor Size Configuration Register CAM_CAMWIN

Bit	31	30	29	28	27	26	25	24	23	22	21	20	19	18	17	16
Name					PIXELS											
Type					R/W											
Reset					fffh											
Bit	15	14	13	12	11	10	9	8	7	6	5	4	3	2	1	0
Name					LINES											
Type					R/W											
Reset					fffh											

PIXEL Total input pixel number

LINE Total input line number

CAM+0008h TG Grab Range Start/End Pixel Configuration Register CAM_GRABCOL

Bit	31	30	29	28	27	26	25	24	23	22	21	20	19	18	17	16
Name					START											
Type					R/W											
Reset					0											
Bit	15	14	13	12	11	10	9	8	7	6	5	4	3	2	1	0
Name					END											
Type					R/W											
Reset					0											

START Grab start pixel number

END Grab end pixel number

CAM+000Ch TG Grab Range Start/End Line Configuration Register CAM_GRABROW

Bit	31	30	29	28	27	26	25	24	23	22	21	20	19	18	17	16
Name					START											
Type					R/W											
Reset					0											
Bit	15	14	13	12	11	10	9	8	7	6	5	4	3	2	1	0
Name					END											
Type					R/W											
Reset					0											

聯發科技機密不得洩漏
MTK CONFIDENTIAL
NO DISCLOSURE

START Grab start line number

END Grab end line number

MTK Confidential A (機密)

CAM+0010h Sensor Mode Configuration Register CAM_CSMODE

Bit	31	30	29	28	27	26	25	24	23	22	21	20	19	18	17	16
Name																
Type																
Reset																
Bit	15	14	13	12	11	10	9	8	7	6	5	4	3	2	1	0
Name									VSPOL	HSPOL	PWRON	RST	AUTO			EN
Type									R/W	R/W	R/W	R/W	R/W			R/W
Reset									0	0	0	0	0			0

VSPOL Sensor Vsync input polarity

HSPOL Sensor Hsync input polarity

AUTO Auto lock sensor input horizontal pixel numbers enable

EN Sensor process counter enable

CAM+0018h View Finder Mode Control Register CAM_VFCON

Bit	31	30	29	28	27	26	25	24	23	22	21	20	19	18	17	16
Name	AV_SYNC_SEL				AV_SYNC_LINENO[11:0]											
Type	R/W				R/W											
Reset	0				0											
Bit	15	14	13	12	11	10	9	8	7	6	5	4	3	2	1	0
Name						SP_DELAY			SP_MODE	TAKE_PIC				FR_CON		
Type						R/W			R/W	R/W				R/W		
Reset						0			0	0				0		

AV_SYNC_SEL Av_sync start point selection

- **0** Start from AV_SYNC_LINENO
- **1** Start from vsync

AV_SYNC_LINENO Av_sync start point line counts

SP_DELAY Still Picture Mode delay

SP_MODE Still Picture Mode

TAKE_PIC Take Picture Request

FR_CON Frame Sampling Rate Control

- **000** Every frame is sampled
- **001** One frame is sampled every 2 frames
- **010** One frame is sampled every 3 frames
- **011** One frame is sampled every 4 frames
- **100** One frame is sampled every 5 frames
- **101** One frame is sampled every 6 frames
- **110** One frame is sampled every 7 frames
- **111** One frame is sampled every 8 frames

MTK CONFIDENTIAL
NO DISCLOSURE

CAM+001Ch Camera Module Interrupt Enable Register CAM_INTEN

Bit	31	30	29	28	27	26	25	24	23	22	21	20	19	18	17	16
Name	VSYNC_INT_SEL															
Type	R/W															
Reset	0															

Bit	15	14	13	12	11	10	9	8	7	6	5	4	3	2	1	0
Name								AV_SYNC_INT	VSYNC_INT			ISPDONE	IDLE	GMCOVRUN	REZOVRUN	EXPDO
Type								R/W	R/W			R/W	R/W	R/W	R/W	R/W
Reset								0	0			0	0	0	0	0

VSYNC_SEL Vsync interrupt selection

- **0** From Vsync Falling Edge
- **1** From Vsync Rising Edge

AV_SYNC_INT AV sync interrupt

VSYNC_INT Vsync interrupt

ISPDONE ISP done interrupt enable control

IDLE Returning idle state interrupt enable control

GMCOVRUN GMC port over run interrupt enable control

REZOVRUN Resizer over run interrupt enable control

EXPDO Exposure done interrupt enable control

CAM+0020h Camera Module Interrupt Status Register CAM_INTSTA

Bit	31	30	29	28	27	26	25	24	23	22	21	20	19	18	17	16
Name																
Type																
Reset																
Bit	15	14	13	12	11	10	9	8	7	6	5	4	3	2	1	0
Name								AV_SYNC_INT	VSYNC_INT			ISPDONE	IDLE	GMCOVRUN	REZOVRUN	EXPDO
Type								R/W	R			R	R	R	R	R
Reset								0	0			0	0	0	0	0

CAM+0024h Camera Module Path Config Register CAM_PATH

Bit	31	30	29	28	27	26	25	24	23	22	21	20	19	18	17	16
Name	CNTON	CNTMODE		WRITE_LEVEL				BAYER10_OUT	REZ_DISCONN	REZ_LPF_OFF	OUTPATH_TYPE					OUTPATH_EN
Type	R/W	R/W		R/W				R/W	RW	RW	R/W					R/W
Reset	0	0		3				0	0	0	0					0
Bit	15	14	13	12	11	10	9	8	7	6	5	4	3	2	1	0
Name			SWAP_Y	SWAP_CBCR	INDATA_FORMAT	INTYPE_SEL			INPATH_RATE						INPATH_THROTEN	INPATH_SEL
Type		R/W	R/W	R/W	R/W	R/W			R/W						R/W	R/W
Reset		0	0	0	0	1			0						0	0

CNTON Enable Debug Mode Data Transfer Counter

CNTMODE Data Transfer Count Selection

- **00** sRGB count
- **01** YCbCr count

REZ_DISCONN Resizer disconnect enable

REZ_LPF_OFF Resizer low-Pass disable

WRITE_LEVEL Write FIFO threshold level

BAYER10_OUT 10-bit Bayer Format output.

Outpath type should be set to 00.

OUTPATH_TYPE Outpath Type Select

- **00** Bayer Format

MTK CONFIDENTIAL NO DISCLOSURE

MTK Confidential A (機密)

01 ISP output
02 RGB888 Format
03 RGB565 Format

OUTPATH_EN Enable Output to Memory
SWAP_Y YCbCr in Swap Y
SWAP_CBCR YCbCr in Swap Cb Cr
INDATA_FORMAT Sensor Input Data connection
INTYPE_SEL Input type selection

000 Bayer Format
001 YUV422 Format
Default Input Format : **UYVY**
101 YCbCr422 Format
010 RGB Format

To enable YUV422/YCbCr422 input fast mode, refer to CAM + 011C bit 20

INPATH_RATE Input type rate control
INPATH_THROTEN Input path throttle enable
INPATH_SEL Input path selection

0 Sensor input
1 From memory

CAM+0028h Camera Module Input Address Register CAM_INADDR

Bit	31	30	29	28	27	26	25	24	23	22	21	20	19	18	17	16
Name	CAM_INADDR[31:16]															
Type	R/W															
Reset	0															
Bit	15	14	13	12	11	10	9	8	7	6	5	4	3	2	1	0
Name	CAM_INADDR[15:0]															
Type	R/W															
Reset	0															

CAM_INADDR Input memory address

CAM+002Ch Camera Module Output Address Register CAM_OUTADDR

Bit	31	30	29	28	27	26	25	24	23	22	21	20	19	18	17	16
Name	CAM_OUTADDR[31:16]															
Type	R/W															
Reset	0															
Bit	15	14	13	12	11	10	9	8	7	6	5	4	3	2	1	0
Name	CAM_OUTADDR[15:0]															
Type	R/W															
Reset	0															

CAM_OUTADDR Output memory address

6.7.1.2 Color Process Register Definition

CAM+00B8h Y Channel Configuration Register CAM_YCHAN

Bit	31	30	29	28	27	26	25	24	23	22	21	20	19	18	17	16
Name												CONTRAST_GAIN				
Type												R/W				
Reset												40h				
Bit	15	14	13	12	11	10	9	8	7	6	5	4	3	2	1	0

聯發科技股份有限公司
MTK CONFIDENTIAL
NO DISCLOSURE

Name	SIGN_BRIGHT_OFFSET	BRIGHT_OFFSET	VSUP_EN		UV_LP_EN	CSUP_EDGE_GAIN
Type	R/W	R/W	R/W		R/W	R/W
Reset	1	0	0		0	10h

MTK Confidential A

CONTRAST_GAIN Y channel contrast gain value
SIGN_BRIGHT_OFFSET Sign bit of Y channel brightness offset value
BRIGHT_OFFSET Y channel brightness offset value
VSUP_EN Vertical Edge color suppression enable
UV_LP_EN UV channel low pass enable
CSUP_EDGE_GAIN Chroma suppression edge gain value(1.3)

WIT

CAM+00BCh UV Channel Configuration Register CAM_UVCHAN

Bit	31	30	29	28	27	26	25	24	23	22	21	20	19	18	17	16
Name	U11								V22							
Type	R/W								R/W							
Reset	20h								20h							
Bit	15	14	13	12	11	10	9	8	7	6	5	4	3	2	1	0
Name	SIGN_U_OFFSET	U_OFFSET							SIGN_V_OFFSET	V_OFFSET						
Type	R/W	R/W							R/W	R/W						
Reset	0	0							0	0						

U11 Hue U channel operating value
V11 Hue V channel operating value
SIGN_U_OFFSET Sign bit of Hue U channel offset value
U_OFFSET Hue U channel offset value
SIGN_V_OFFSET Sign bit of Hue V channel offset value
V_OFFSET Hue V channel offset value

聯發機密不得洩漏
MTK CONFIDENTIAL

CAM+00C0h Space Convert YUV Register 1 CAM_SCONV1

Bit	31	30	29	28	27	26	25	24	23	22	21	20	19	18	17	16
Name									Y_GAIN							
Type									R/W							
Reset									FFh							
Bit	15	14	13	12	11	10	9	8	7	6	5	4	3	2	1	0
Name	U_GAIN								V_GAIN							
Type	R/W								R/W							
Reset	91h								B8h							

NO DISCLOSURE

Y_GAIN Space Convert Y channel gain value
U_GAIN Space Convert U channel gain value
V_GAIN Space Convert V channel gain value

CAM+00C4h Space Convert YUV Register 2 CAM_SCONV2

Bit	31	30	29	28	27	26	25	24	23	22	21	20	19	18	17	16
Name												Y_OFFSET				
Type												R/W				
Reset												01h				
Bit	15	14	13	12	11	10	9	8	7	6	5	4	3	2	1	0
Name	U_OFFSET											V_OFFSET				
Type	R/W											R/W				
Reset	80h											80h				

WIT

Y_OFFSET Space Convert Y channel offset value
U_OFFSET Space Convert U channel offset value
V_OFFSET Space Convert V channel offset value

MTK Confidential A (機密)

CAM+0128h Vertical Subsample Control Register CAM_VSUB

Bit	31	30	29	28	27	26	25	24	23	22	21	20	19	18	17	16
Name				V_SUB_EN	V_SUB_IN											
Type				R/W	R/W											
Reset				0	0											
Bit	15	14	13	12	11	10	9	8	7	6	5	4	3	2	1	0
Name					V_SUB_OUT											
Type					R/W											
Reset					0											

V_SUB_EN Vertical sub-sample enable
V_SUB_IN Source vertical size
V_SUB_OUT Sub-sample vertical size

CAM+012ch Horizontal Subsample Control Register CAM_HSUB

Bit	31	30	29	28	27	26	25	24	23	22	21	20	19	18	17	16
Name				H_SUB_EN	H_SUB_IN											
Type				R/W	R/W											
Reset				0	0											
Bit	15	14	13	12	11	10	9	8	7	6	5	4	3	2	1	0
Name					H_SUB_OUT											
Type					R/W											
Reset					0											

H_SUB_EN Horizontal sub-sample enable
H_SUB_IN Source horizontal size
H_SUB_OUT Sub-sample horizontal size

CAM+0174h Result Window Vertical Size Register RWINV_SEL

Bit	31	30	29	28	27	26	25	24	23	22	21	20	19	18	17	16
Name				RWIN_EN	RWINV_START											
Type				R/W	R/W											
Reset				0h	0h											
Bit	15	14	13	12	11	10	9	8	7	6	5	4	3	2	1	0
Name					RWINV_END											
Type					R/W											
Reset					0h											

RWIN_EN Result window enable
RWINV_START Result window vertical start line
RWINV_END Result window vertical end line

CAM+0178h Result Window Horizontal Size Register RWINH_SEL

Bit	31	30	29	28	27	26	25	24	23	22	21	20	19	18	17	16
Name					RWINH_START											
Type					R/W											
Reset					0h											
Bit	15	14	13	12	11	10	9	8	7	6	5	4	3	2	1	0
Name					RWINH_END											
Type					R/W											
Reset					0h											

IWIT
廠內機密不得洩漏
MTK CONFIDENTIAL
NO DISCLOSURE

RWINH_START Result window horizontal start pixel

RWINH_END Result window horizontal end pixel

MTK Confidential A (機密)

CAM+0180h Camera Interface Debug Mode Control Register CAM_DEBUG

Bit	31	30	29	28	27	26	25	24	23	22	21	20	19	18	17	16
Name																
Type																
Reset																
Bit	15	14	13	12	11	10	9	8	7	6	5	4	3	2	1	0
Name																
Type																
Reset																

CAM+0184h Camera Module Debug Information Write Out Destination Address CAM_DSTADDR

Bit	31	30	29	28	27	26	25	24	23	22	21	20	19	18	17	16
Name	DST_ADD[31:16]															
Type	R/W															
Reset	4000h															
Bit	15	14	13	12	11	10	9	8	7	6	5	4	3	2	1	0
Name	DST_ADD[15:0]															
Type	R/W															
Reset	0000h															

DST_ADD Debug Information Write Output Destination Address

聯發機密不得洩漏

CAM+0188h Camera Module Debug Information Last Transfer Destination Address CAM_LASTADDR

Bit	31	30	29	28	27	26	25	24	23	22	21	20	19	18	17	16
Name	LAST_ADD[31:16]															
Type	R/W															
Reset	0															
Bit	15	14	13	12	11	10	9	8	7	6	5	4	3	2	1	0
Name	LAST_ADD[15:0]															
Type	R/W															
Reset	0															

MTK CONFIDENTIAL

LAST_ADD Debug Information Last Transfer Destination Address

NO DISCLOSURE

CAM+018Ch Camera Module Frame Buffer Transfer Out Count Register CAM_XFERCNT

Bit	31	30	29	28	27	26	25	24	23	22	21	20	19	18	17	16
Name	XFER_COUNT [31:16]															
Type	RO															
Reset	0															
Bit	15	14	13	12	11	10	9	8	7	6	5	4	3	2	1	0
Name	XFER_COUNT[15:0]															
Type	RO															
Reset	0															

XFER_COUNT Pixel Transfer Count per Frame

IWIT

CAM+0190h Sensor Test Model Configuration Register 1 CAM_MDLCFG1

Bit	31	30	29	28	27	26	25	24	23	22	21	20	19	18	17	16
Name	VSYNC								IDLE_PIXEL_PER_LINE							

Type	R/W								R/W							
Reset	0								0							
Bit	15	14	13	12	11	10	9	8	7	6	5	4	3	2	1	0
Name			LINECHG_EN	GRAY_LEVEL			ON	RST	STILL	PATTERN	PIXEL_SEL		CLK_DIV			
Type			R/W	R/W			R/W	R/W	R/W	R/W	R/W		R/W			
Reset			0	0			0	0	0	0	0		0			

MTK Confidential A (機密)

VSYNC VSYNC high duration in line unit(IDLE_PIXEL_PER_LINE + PIXEL)

IDLE_PIXEL_PER_LINE HSYNC low duration in pixel unit

LINECHG_EN Pattern 0 2 lines change mode enable

GRAY_LEVEL Sensor Model Gray Level Enable. When gray level is enable, increased gray level pattern will

be generated.

ON Enable Sensor Model.

RST Reset Sensor Model

STILL Still picture Mode

PATTERN Sensor Model Test Pattern Selection

PIXEL_SEL Sensor Model output pixel selection.

- **00** All pixels
- **01** 01 pixel
- **10** 10 pixel
- **11** 00 and 11 pixels

CLK_DIV Pixel_Clock/System_Clock Ratio

聯發機密不得洩漏

CAM +0194h Sensor Test Model Configuration Register 2 CAM_MDLCFG2

Bit	31	30	29	28	27	26	25	24	23	22	21	20	19	18	17	16
Name						LINE										
Type						R/W										
Reset						0										
Bit	15	14	13	12	11	10	9	8	7	6	5	4	3	2	1	0
Name						PIXEL										
Type						R/W										
Reset						0										

IN CONFIDENTIAL

LINE Sensor Model Line Number

PIXEL Sensor Model Pixel Number (HSYNC high duration in pixel unit)

NO DISCLOSURE

CAM +01D8h CAM RESET Register CAM_RESET

Bit	31	30	29	28	27	26	25	24	23	22	21	20	19	18	17	16
Name												TG_STATUS				
Type												R				
Reset																
Bit	15	14	13	12	11	10	9	8	7	6	5	4	3	2	1	0
Name	ISP_FRAME_COUNT[7:0]															ISP_RESET
Type	RW															RW
Reset	0															0

ISP_FRAME_COUNT ISP frame counter

ISP_RESET ISP reset

CAM +01DCh TG STATUS Register — TG_STATUS

MTK Confidential A (機密)

Bit	31	30	29	28	27	26	25	24	23	22	21	20	19	18	17	16
Name				SYN_VFON	LINE_COUNT[11:0]											
Type				R	R											
Reset																
Bit	15	14	13	12	11	10	9	8	7	6	5	4	3	2	1	0
Name					PIXEL_COUNT[11:0]											
Type					R											
Reset																

SYN_VFON TG view finder status
LINE_COUNT TG line counter
PIXEL_COUNT TG pixel counter

CAM +0248h CAM GMC DEBUG Register — CAM_DEBUG

Bit	31	30	29	28	27	26	25	24	23	22	21	20	19	18	17	16
Name																
Type																
Reset																
Bit	15	14	13	12	11	10	9	8	7	6	5	4	3	2	1	0
Name																
Type																
Reset																

CAM +0274h CAM VERSION Register — CAM_VERSION

聯發機密不得洩漏

Bit	31	30	29	28	27	26	25	24	23	22	21	20	19	18	17	16
Name	YEAR[16:0]															
Type	R															
Reset																
Bit	15	14	13	12	11	10	9	8	7	6	5	4	3	2	1	0
Name	MONTH[15:0]								DATE[15:0]							
Type	R								R							
Reset																

MTK CONFIDENTIAL

YEAR Year ASCII
MONTH Month ASCII
DATE Date ASCII

NO DISCLOSURE

IWIT

7 Audio Front-End

MTK Confidential A (機密)

7.1 General Description

The audio front-end essentially consists of voice and audio data paths. **Figure 69** shows the block diagram of the audio front-end. All voice band data paths comply with the GSM 03.50 specification. Mono hands-free audio or external FM radio playback paths are also provided. The audio stereo path facilitates CD-quality playback, external FM radio, and voice playback through a headset.

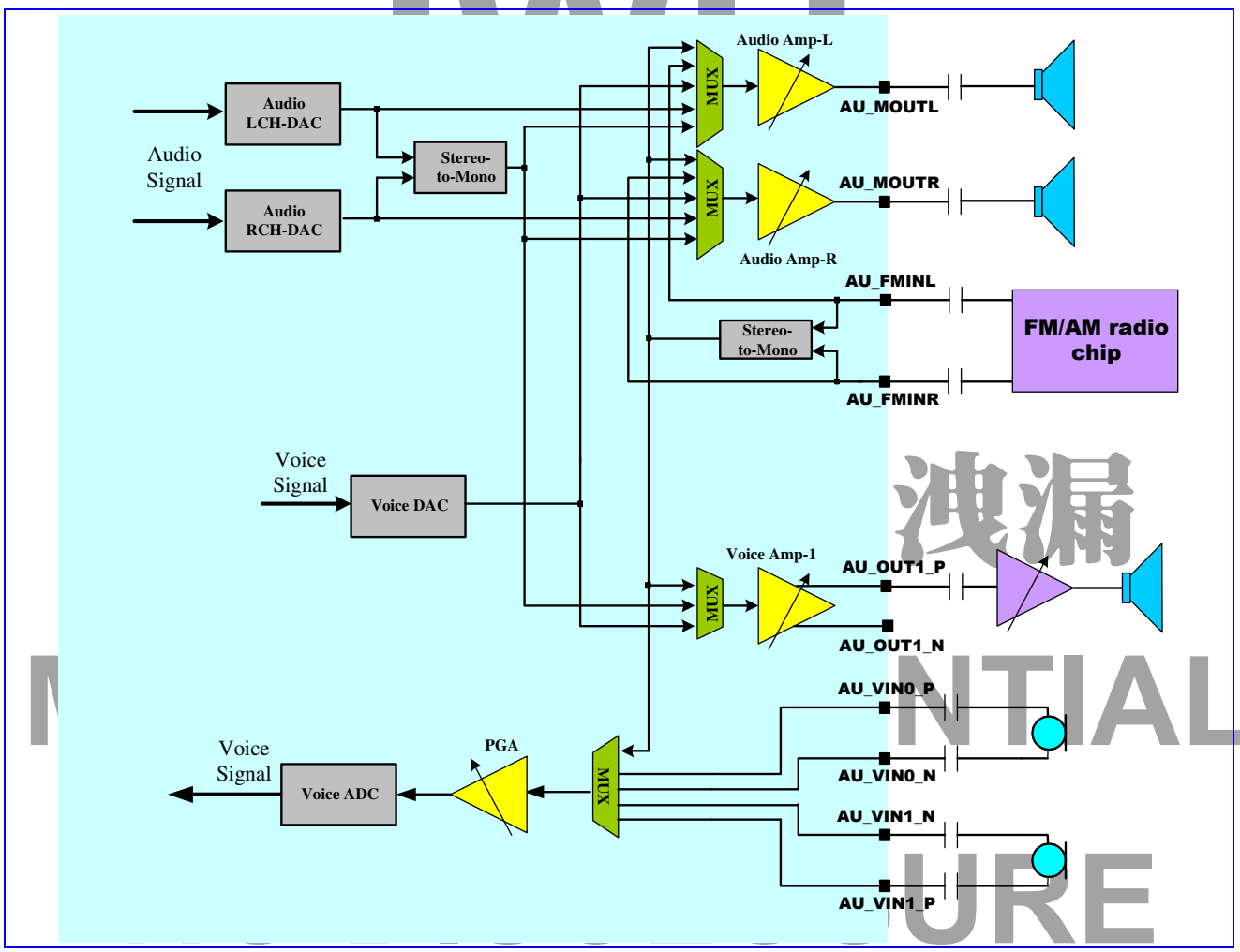

Figure 69 Block diagram of audio front-end

Figure 70 shows the digital circuits block diagram of the audio front-end. The APB register block is an APB peripheral that stores settings from the MCU. The DSP audio port block interfaces with the DSP for control and data communications. The digital filter block performs filter operations for voice band and audio band signal processing. The Digital Audio Interface (DAI) block communicates with the System Simulator for FTA or external Bluetooth modules.

IWIT

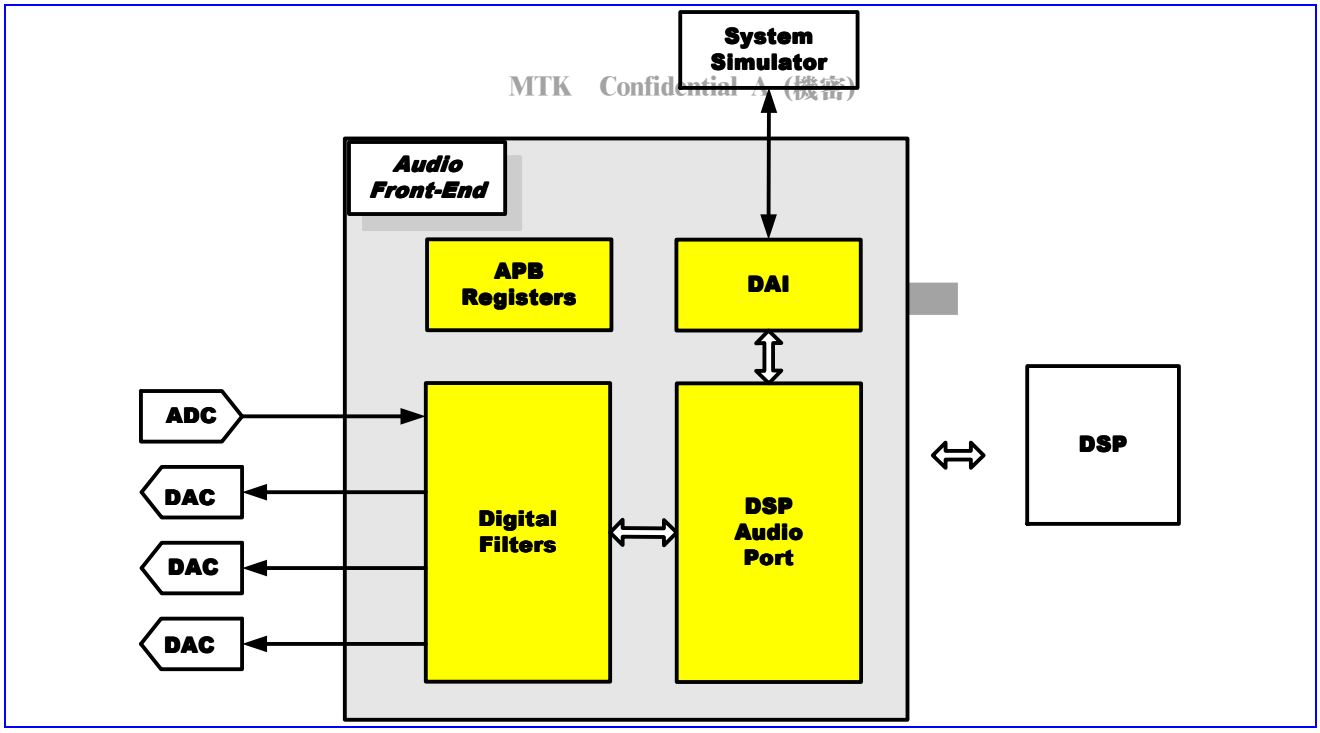

Figure 70 Block diagram of digital circuits of the audio front-end

To communicate with the external Bluetooth module, the master-mode PCM interface and master-mode I2S/EIAJ interface are supported. The clock of PCM interface is 256 KHz, and the frame sync is 8 KHz. Both long sync and short sync interfaces are supported. The PCM interface can transmit 16-bit stereo or 32-bit mono 8KHz sampling rate voice signal. **Figure 71** shows the timing diagram of the PCM interface. Note that the serial data changes when the clock is rising and is latched when the clock is falling.

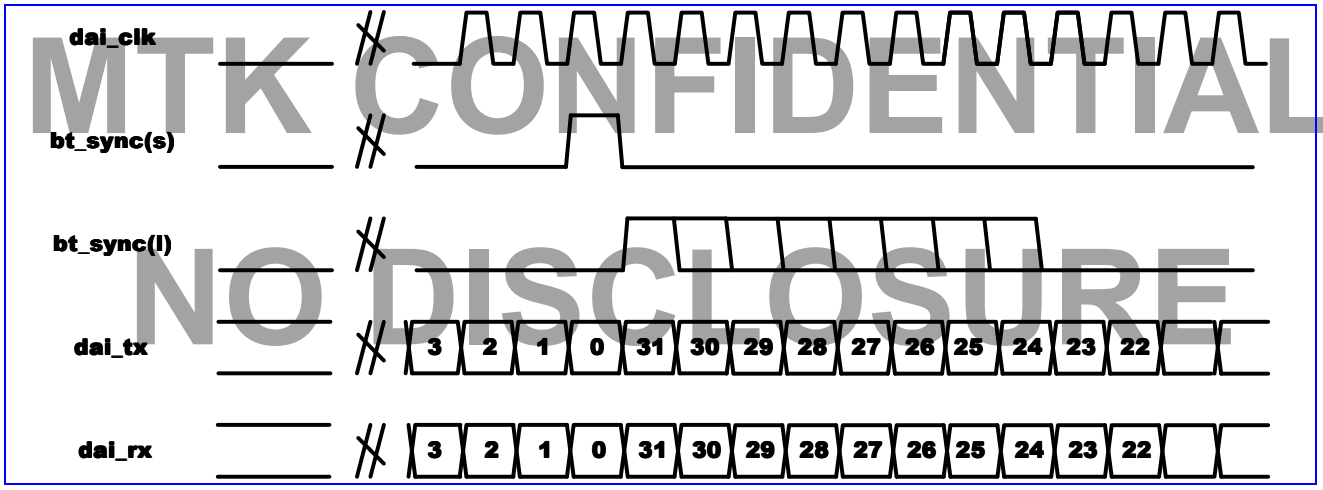

Figure 71 Timing diagram of Bluetooth application

I2S/EIAJ interface is designed to transmit high quality audio data. **Figure 71** and **Figure 72** illustrate the timing diagram of the two types of interfaces. I2S/EIAJ can support 32KHz, 44.1KHz, and 48KHz sampling rate audio signals. The clock frequency of I2S/EIAJ can be 32×(sampling frequency), or 64×(sampling frequency). For example, to transmit a 44.1KHz CD-quality music, the clock frequency should be 32×44.1KHz = 1.4112MHz or 64×44.1KHz = 2.8224MHz.

I2S/EIAJ interface is not only used for Bluetooth module, but also for external DAC components. Audio data can easily be sent to the external DAC through the I2S/EIAJ interface.

聯發機密不得洩漏
MTK CONFIDENTIAL
NO DISCLOSURE
IWT

In this document, the I2S/EIAJ interface is referred to as EDI (External DAC Interface).

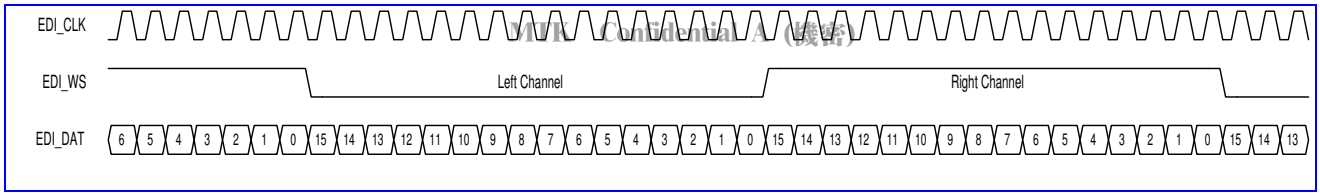

Figure 72 EDI Format 1: EIAJ (FMT = 0).

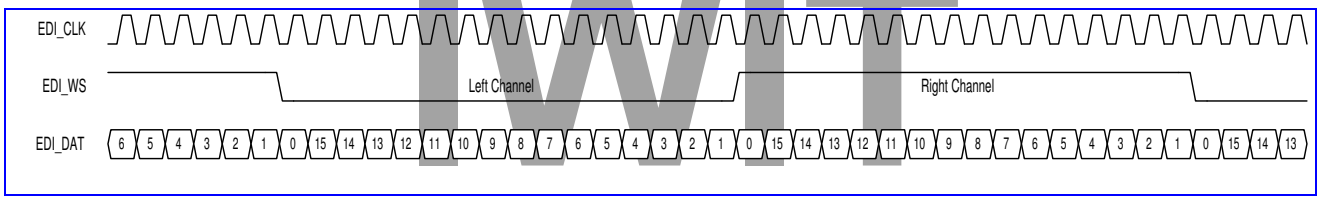

Figure 73 EDI Format 2: I^2S (FMT = 1).

7.1.1 DAI, PCM and EDI Pin Sharing

DAI, PCM, and EDI interfaces share the same pins. The pin mapping is listed in **Table 45**.

PIN NAME	DAI	PCM	EDI
DAI_CLK (OUTPUT)	DAI_CLK	PCM_CLK	EDI_CLK
DAI_TX (OUTPUT)	DAI_TX	PCM_OUT	EDI_DAT
DAI_RX (INPUT)	DAI_RX	PCM_IN	
BT_SYNC (OUTPUT)	-	PCM_SYNC	EDI_WS

Table 45 Pin mapping of DAI, PCM, and EDI interfaces.

Beside the shared pins, the EDI interface can also use other dedicated pins. With the dedicated pins, PCM and EDI interfaces can operate at the same time.

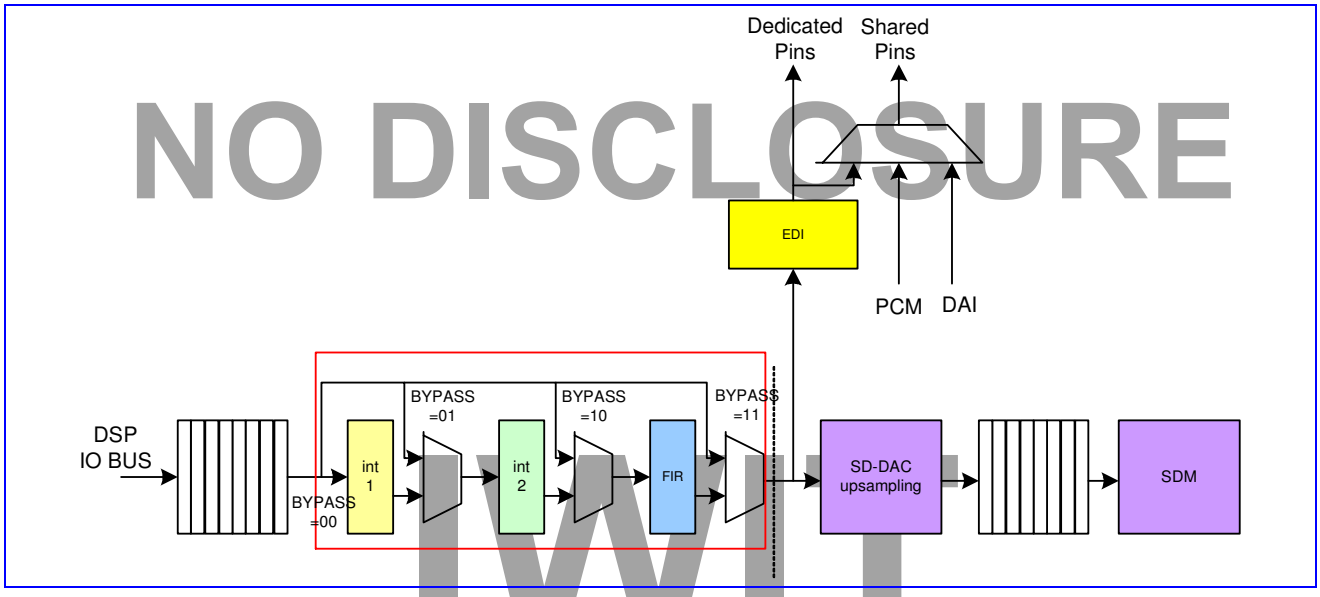

Figure 74 DAI, PCM, EDI interfaces

聯發機密不得洩漏
MTK CONFIDENTIAL
NO DISCLOSURE
IWIT

7.2 Register Definitions

MCU APB bus registers in audio front-end are listed as follows.

MTK Confidential A (機密)

AFE+0000h AFE Voice MCU Control Register AFE_VMCU_CON0

Bit	15	14	13	12	11	10	9	8	7	6	5	4	3	2	1	0
Name																VAFEON
Type																R/W
Reset																0

MCU sets this register to start AFE voice operation. A synchronous reset signal is issued, then periodical interrupts of 8-KHz frequency are issued. Clearing this register stops the interrupt generation.

VAFEON Turn on audio front-end operations.

AFE+000Ch AFE Voice Analog-Circuit Control Register 1 AFE_VMCU_CON1

Bit	15	14	13	12	11	10	9	8	7	6	5	4	3	2	1	0
Name									VRSDON							
Type									R/W							
Reset									0							

Set this register for consistency of analog circuit setting. Suggested value is 80h.

VRSDON Turn on the voice-band redundant signed digit function.

- **0**: 1-bit 2-level mode
- **1**: 2-bit 3-level mode

AFE+0014h AFE Voice DAI Bluetooth Control Register AFE_VDB_CON

Bit	15	14	13	12	11	10	9	8	7	6	5	4	3	2	1	0
Name										EDION	VDAION	PCMON	VBTSYNC	VBTSLEN		
Type										RW	R/W	R/W	R/W	R/W		
Reset										0	0	0	0	000		

Set this register for DAI test mode and Bluetooth application.

EDION EDI signals are selected as the output of DAI, PCM, EDI shared interface.

- **0** EDI is not selected. A dedicated EDI interface can be enabled by programming the GPIO selection. Please refer to GPIO section for details.
- **1** EDI is selected. VDAION and VBTON are not set.

VDAION Turn on the DAI function.

VBTON Turn on the Bluetooth PCM function.

VBTSYNC Bluetooth PCM frame sync type

- **0**: short
- **1**: long

VBTSLEN Bluetooth PCM long frame sync length = VBTSLEN+1

AFE+0018h AFE Voice Look-Back mode Control Register AFE_VLB_CON

Bit	15	14	13	12	11	10	9	8	7	6	5	4	3	2	1	0

聯發機密不得洩漏
MTK CONFIDENTIAL
NO DISCLOSURE
IWIT

Name													~~VBYPASSIIR~~	VDAPINMODE	VINTINMODE	VDECINMODE
Type													~~R/W~~	R/W	R/W	R/W
Reset													~~0~~	0	0	0

Set this register for AFE voice digital circuit configuration control. Several loop back modes are implemented for test purposes. Default values correspond to the normal function mode.

~~**VBYPASSIIR** Bypass hardware IIR filters.~~

VDAPINMODE DSP audio port input mode control

- **0** Normal mode
- **1** Loop back mode

VINTINMODE interpolator input mode control

- **0** Normal mode
- **1** Loop back mode

VDECINMODE decimator input mode control

- **0** Normal mode
- **1** Loop back mode

AFE+0020h AFE Audio MCU Control Register 0 AFE_AMCU_CON0

Bit	15	14	13	12	11	10	9	8	7	6	5	4	3	2	1	0
Name																AAFEON
Type																R/W
Reset																0

MCU sets this register to start AFE audio operation. A synchronous reset signal is issued, then periodical interrupts of 1/6 sampling frequency are issued. Clearing this register stops the interrupt generation.

AFE+0024h AFE Audio Control Register 1 AFE_AMCU_CON1

Bit	15	14	13	12	11	10	9	8	7	6	5	4	3	2	1	0
Name		MONO	NEWSDM	IDWA	BYPASS			ADITHON	ADITHVAL		ARAMPSP		AMUTER	AMUTEL	AFS	
Type		R/W	R/W	R/W	RW			R/W	R/W		R/W		R/W	R/W	R/W	
Reset		0	1	1	00			0	00		00		0	0	00	

MCU sets this register to inform hardware of the sampling frequency of audio being played back.

MONO Mono mode select. AFE HW will do (left + right) / 2 operation to the audio sample pair. Thus both right/left channel DAC will have the same inputs.

- **0** Disable modno mode.
- **1** Enable mono mode.

NEWSDM Select new 9-level SDM in audio DAC.

- **0** Select old SDM.
- **1** Select new SDM.

IDWA Select IDWA algorithm in new audio DAC SDM. If choosing old SDM, this bit is neglected.

- **0** Use no IDWA algorithm in analog part of DAC.
- **1** Use IDWA algorithm in analog part of DAC.

BYPASS To bypass part of the audio hardware path.

IWIT MTK CONFIDENTIAL NO DISCLOSURE IWIT

00 No bypass. The input data rate is 1/4 sampling frequency. For example, if the sampling frequency is 32KHz, then the input data rate is 8KHz.

MTK Confidential A (機密)

01 Bypass the first stage of interpolation. The input data rate is 1/2 the sampling frequency.

10 Bypass two stages of interpolation. The input data rate is the same as the sampling frequency.

11 Bypass two stages of interpolation and EQ filter. The input data rate is the same as the sampling frequency.

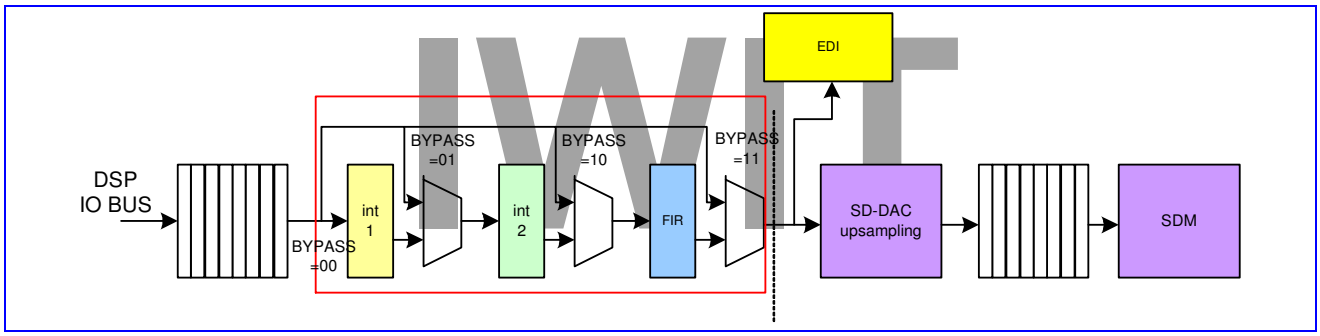

Figure 75 Block diagram of the audio path.

ADITHON Turn on the audio dither function.

ADITHVAL Dither scaling setting.

00 1/4

01 1/2

10 1

11 2

聯發機密不得洩漏

ARAMPSP ramp up/down speed selection

00 8, 4096/AFS

01 16, 2048/AFS

10 24, 1024/AFS

11 32, 512/AFS

MTK CONFIDENTIAL

AMUTER Mute the audio R-channel, with a soft ramp up/down.

AMUTEL Mute the audio L-channel, with a soft ramp up/down.

AFS Sampling frequency setting.

NO DISCLOSURE

00 32-KHz

01 44.1-KHz

10 48-KHz

11 reserved

AFE+0028h AFE EDI Control Register AFE_EDI_CON

Bit	15	14	13	12	11	10	9	8	7	6	5	4	3	2	1	0
Name								DIR	SRC	WCYCLE					FMT	EN
Type								R/W	R/W	R/W					R/W	R/W
Reset								0	0	01111					0	0

This register is used to control the EDI

EN Enable EDI. When EDI is disabled, EDI_DAT and EDI_WS hold low.

0 disable EDI

1 enable EDI

FMT EDI format

MTK Confidential A (機密)

0 EIAJ

1 I2S

WCYCLE Clock cycle count in a word. Cycle count = WCYCLE + 1, and WCYCLE can be 15 or 31 only. Any other values result in an unpredictable error.

15 Cycle count is 16.

31 Cycle count is 32.

SRC I2S clock and WS signal source.

0 Internal mode. The clock and word select signals are fed to external device from AFE.

1 External mode. The clock and word select signals are fed externally from the connected device. There is a buffer control mechanism to deal with the clock mismatch between internal and external clocks.

DIR Serial data bit direction

0 Output mode. Audio data is fed out to the external device.

1 Input mode or recording mode. By this recording mechanism, DSP can do some post processing or voice memos.

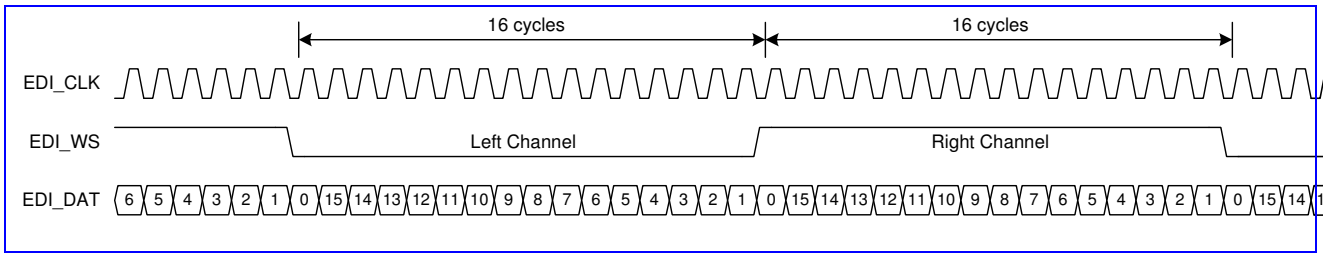

Figure 76 Cycle count is 16 for I2S format.

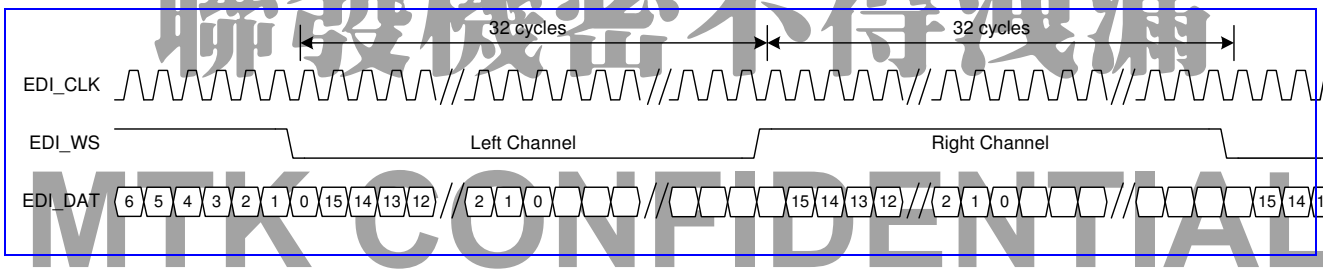

Figure 77 Cycle count is 32 for I2S format.

AFE+0030h Audio/Voice DAC SineWave Generator AFE_DAC_TEST

Bit	15	14	13	12	11	10	9	8	7	6	5	4	3	2	1	0
Name	VON	AON	MUTE			AMP_DIV			FREQ_DIV							
Type	R/W	R/W	R/W			R/W			R/W							
Reset	0	0	0			111			0000_0001							

This register is only for analog design verification on audio/voice DACs.

VON Makes voice DAC output the test sine wave.

0 Voice DAC inputs are normal voice samples

1 Voice DAC inputs are sine waves

AON Makes audio DAC output the test sine wave.

0 Audio DAC inputs are normal audio samples

1 Audio DAC inputs are sine waves

MUTE Mute switch.

0 Turn on the sine wave output in this test mode.

1 Mute the sine wave output.

IWIT
聯發機密不得洩漏
MTK CONFIDENTIAL
NO DISCLOSURE
IWIT

AMP_DIV Amplitude setting.

FREQ_DIV Frequency setting.

MTK Confidential A (機密)

AFE+0034h Audio/Voice Interactive Mode Setting AFE_VAM_SET

Bit	15	14	13	12	11	10	9	8	7	6	5	4	3	2	1	0
Name	A2V													PER_VAL		
Type	R/W													R/W		
Reset	0													101		

A2V Redirect audio interrupt to voice interrupt. In other words, replace voice interrupt by audio interrupt.

0 [voice interrupt / audio interrupt] → [voice / audio]

1 [audio interrupt / no interrupt] → [voice / audio]

PER_VAL Counter reset value for audio interrupt generation period setting. For example, by default, the setting = 5 causes interrupt per 6 L/R samples. Changing this value can change the rate of audio interrupt.

AFE+0040h~00F0h AFE Audio Equalizer Filter Coefficient Register AFE_EQCOEF

Bit	15	14	13	12	11	10	9	8	7	6	5	4	3	2	1	0
Name	A															
Type	WO															

Audio front-end provides a 45-tap equalizer filter. The filter is shown below.

DO = (A44 X DI44 + A43 X DI43 … + A1 X DI1 + A0 X DI0)/32768.

DIn is the input data, and An is the coefficient of the filter, which is a 16-bit 2's complement signed integer. DI0 is the last input data.

The coefficient cannot be programmed when the audio path is enabled, or unpredictable noise may be generated. If coefficient programming is necessary while the audio path is enabled, the audio path must be muted during programming. After programming is complete, the audio path is not to be resumed (unmated) for 100 sampling periods.

A Coefficient of the filter.

聯發機密不得洩漏
MTK CONFIDENTIAL
NO DISCLOSURE
IWIT
IWIT

7.3 Programming Guide

Several cases – including speech call, voice memo record, voice memo playback, melody playback and DAI tests – requires that partial or the whole audio front-end be turned on.

The following are the recommended voice band path programming procedures to turn on audio front-end:

1. MCU programs the AFE_DAI_CON, AFE_LB_CON, AFE_VAG_CON, AFE_VAC_CON0, AFE_VAC_CON1 and AFE_VAPDN_CON registers for specific operation modes. Refer also to the analog chip interface specification.
2. MCU clears the VAFE bit of the PDN_CON2 register to ungate the clock for the voice band path. Refer to the software power down control specification.
3. MCU sets AFE_VMCU_CON to start operation of the voice band path.

The following are the recommended voice band path programming procedures to turn off audio front-end:

1. MCU programs AFE_VAPDN_CON to power down the voice band path analog blocks.
2. MCU clears AFE_VMCU_CON to stop operation of the voice band path.
3. MCU sets VAFE bit of PDN_CON2 register to gate the clock for the voice band path.

To start the DAI test, the MS first receives a GSM Layer 3 TEST_INTERFACE message from the SS and puts the speech transcoder into one of the following modes:

MTK Confidential A (機密)

- Normal mode (VDAIMODE[1:0]: 00)
- Test of speech encoder/DTX functions (VDAIMODE[1:0]: 10)
- Test of speech decoder/DTX functions (VDAIMODE[1:0]: 01)
- Test of acoustic devices and A/D & D/A (VDAIMODE[1:0]: 11)

The MS then waits for DAIRST# signaling from the SS. Recognizing this, DSP starts to transmit to and/or receive from the DSP. For further details, refer to the GSM 11.10 specification.

The following are the recommended audio band path programming procedures to turn on audio front-end:

1. MCU programs the AFE_MCU_CON1, AFE_AAG_CON, AFE_AAC_CON, and AFE_AAPDN_CON registers for specific configurations. Refer also to the analog chip interface specification.
2. MCU clears the AAFE bit of the PDN_CON2 register to ungate the clock for the audio band path. Refer to the software power down control specification.
3. MCU sets AFE_AMCU_CON0 to start operation of the audio band path.

The following are the recommended audio band path programming procedures to turn off audio front-end:

1. MCU programs the AFE_AAPDN_CON to power down the audio band path analog blocks. Refer also to the analog block specification for further details.
2. MCU clears AFE_AMCU_CON0 to stop operation of the audio band path.
3. MCU sets the AAFE bit of the PDN_CON2 register to gate the clock for the audio band path.

IWIT
聯發機密不得洩漏
MTK CONFIDENTIAL
NO DISCLOSURE
IWIT

8 Radio Interface Control

MTK Confidential A (機密)

This chapter details the MT6225 interface control with the radio part of a GSM terminal. Providing a comprehensive control scheme, the MT6225 radio interface consists of Baseband Serial Interface (BSI), Baseband Parallel Interface (BPI), Automatic Power Control (APC) and Automatic Frequency Control (AFC), together with APC-DAC and AFC-DAC.

8.1 Baseband Serial Interface

The Baseband Serial Interface controls external radio components. A 3-wire serial bus transfers data to RF circuitry for PLL frequency change, reception gain setting, and other radio control purposes. In this unit, BSI data registers are double-buffered in the same way as the TDMA event registers. The user writes data into the write buffer and the data is transferred from the write buffer to the active buffer when a TDMA_EVTVAL signal (from the TDMA timer) is pulsed.

Each data register BSI_D*n*_DAT is associated with one data control register BSI_D*n*_CON, where *n* denotes the index. Each data control register identifies which events (signaled by TDMA_BSISTR*n*, generated by the TDMA timer) trigger the download process of the word in register BSI_D*n*_DAT. The word and its length (in bits) is downloaded via the serial bus. A special event is triggered when the IMOD flag is set to 1: it provides immediate download process without software programming the TDMA timer.

If more than one data word is to be downloaded on the same BSI event, the word with the lowest address among them is downloaded first, followed by the next lowest and so on.

The total download time depends on the word length, the number of words to download, and the clock rates. The programmer must space the successive event to provide enough time. If the download process of the previous event is not complete before a new event arrives, the latter is suppressed.

The unit has four output pins: BSI_CLK is the output clock, BSI_DATA is the serial data port, and BSI_CS0 and BSI_CS1 are the select pins for 2 external components. BSI_CS1 is multiplexed with another function. Please refer to GPIO table for more detail.

In order to support bi-directional read and write operations of the RF chip, software can directly write values to BSI_CLK, BSI_DATA and BSI_CS by programming the BSI_DOUT register. Data from the RF chip can be read by software via the register BSI_DIN. If the RF chip interface is a 3-wire interface, then BSI_DATA is bi-directional. Before software can program the 3-wire behavior, the BSI_IO_CON register must be set. An additional signal path from GPIO accommodates RF chips with a 4-wire interface.

The block diagram of the BSI unit is as depicted in **Figure 78.**

IWIT
聯發機密不得洩漏
MTK CONFIDENTIAL
NO DISCLOSURE
IWIT

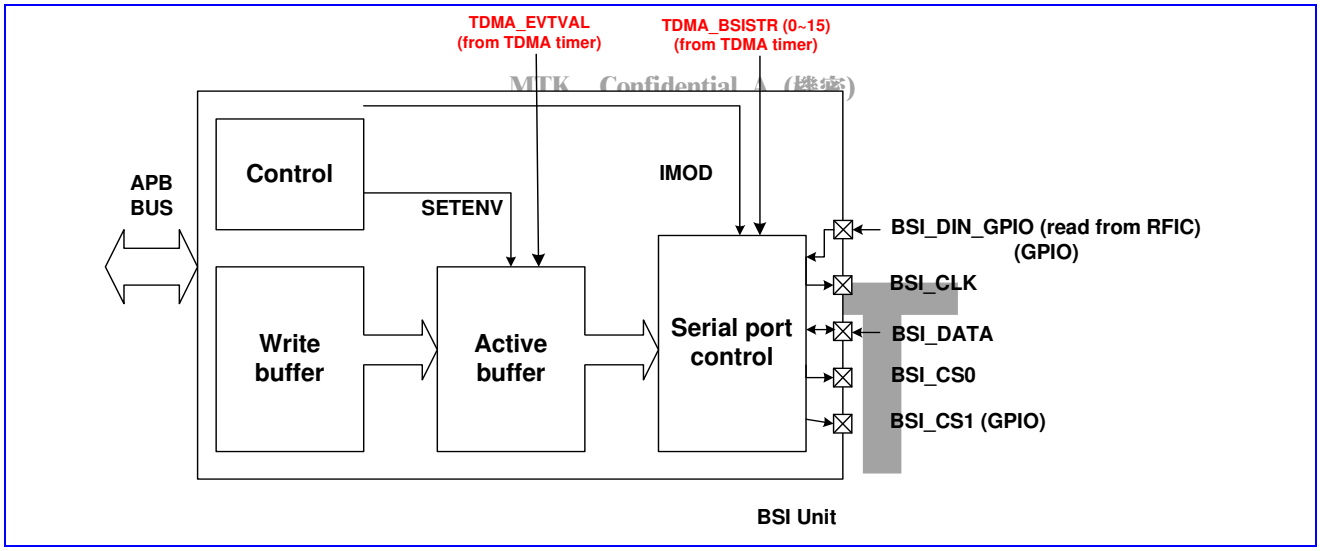

Figure 78 **Block diagram of BSI unit.**

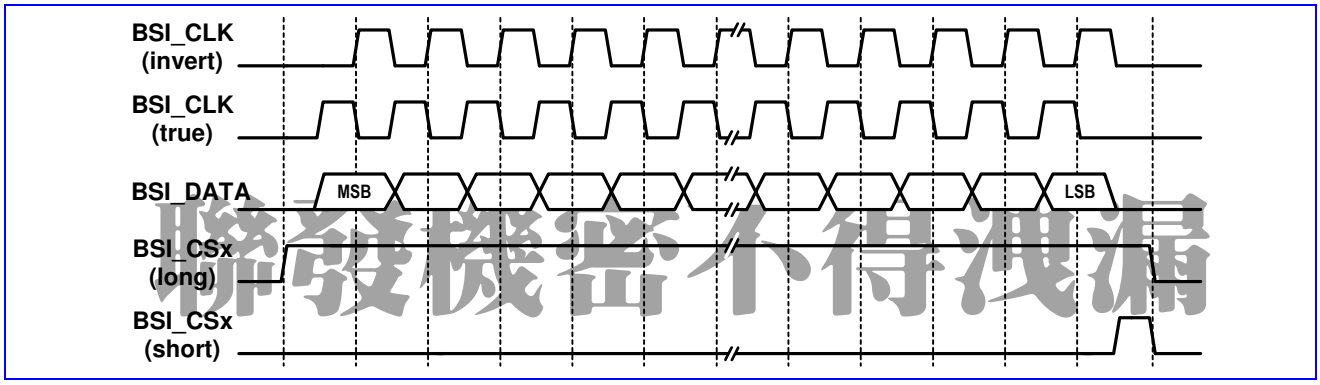

Figure 79 **Timing characteristic of BSI interface.**

聯發機密不得洩漏
MTK CONFIDENTIAL

8.1.1 Register Definitions

BSI+0000h BSI control register BSI_CON

Bit	15	14	13	12	11	10	9	8	7	6	5	4	3	2	1	0
Name								SETENV	EN1_POL	EN1_LEN	EN0_POL	EN0_LEN	IMOD	CLK_SPD		CLK_POL
Type								R/W	R/W	R/W	R/W	R/W	WO	R/W		R/W
Reset								0	0	0	0	0	N/A	0		0

SECURE

This register is the control register for the BSI unit. The register controls the signal type of the 3-wire interface.

CLK_POL Controls the polarity of BSI_CLK. Refer to **Figure 79.**

- **0** True clock polarity
- **1** Inverted clock polarity

CLK_SPD Defines the clock rate of BSI_CLK. The 3-wire interface provides 4 choices of data bit rate. The default is 13/2 MHz.

- **00** 13/2 MHz
- **01** 13/4 MHz
- **10** 13/6 MHz
- **11** 13/8 MHz

IWIT

IMOD Enables immediate mode. If the user writes 1 to the flag, the download is triggered immediately without waiting for the timer events. The words for which the register event ID equals 1Fh are downloaded

following this signal. This flag is write-only. The immediate write is exercised only once: the programmer must write the flag again to invoke another immediate download. Setting the flag does not disable the other events from the timer; the programmer can disable all events by setting BSI_ENA to all zeros.

MTK Confidential A (機密)

ENX_LEN Controls the type of signals BSI_CS0 and BSI_CS1. Refer to **Figure 78.**

- **0** Long enable pulse
- **1** Short enable pulse

ENX_POL Controls the polarity of signals BSI_CS0 and BSI_CS1.

- **0** True enable pulse polarity
- **1** Inverted enable pulse polarity

SETENV Enables the write operation of the active buffer.

- **0** The user writes to the write buffer. The data is then latched in the active buffer after TDMA_EVTVAL is pulsed.
- **1** The user writes data directly to the active buffer.

IWIT

BSI+0004h Control part of data register 0 BSI_D0_CON

Bit	15	14	13	12	11	10	9	8	7	6	5	4	3	2	1	0
Name	ISB			LEN								EVT_ID				
Type	R/W			R/W								R/W				

This register is the control part of the data register 0. The register determines the required length of the download data word, the event to trigger the download process of the word, and the targeted device.

Table 47 lists the 27 data registers of this type. Multiple data control registers may contain the same event ID: the data words of all registers with the same event ID are downloaded when the event occurs.

聯發機密不得洩漏

EVT_ID Stores the event ID for which the data word awaits to be downloaded.

- **00000~01111** Synchronous download of the word with the selected EVT_ID event. The relationship between this field and the event is listed as **Table 46.**

MTK NTIAL
NO DISCLOSURE

Event ID (in binary) – EVT_ID	Event name
00000	TDMA_BSISTR0
00001	TDMA_BSISTR1
00010	TDMA_BSISTR2
00011	TDMA_BSISTR3
00100	TDMA_BSISTR4
00101	TDMA_BSISTR5
00110	TDMA_BSISTR6
00111	TDMA_BSISTR7
01000	TDMA_BSISTR8
01001	TDMA_BSISTR9
01010	TDMA_BSISTR10
01011	TDMA_BSISTR11
01100	TDMA_BSISTR12
01101	TDMA_BSISTR13
01110	TDMA_BSISTR14
01111	TDMA_BSISTR15

Table 46 **The relationship between the value of EVT_ID field in the BSI control registers and the TDMA_BSISTR events.**

IWIT

- **10000~11110** Reserved

11111 Immediate download

LEN Stores the length of the data word. The actual length is defined as LEN + 1 (in bits). The value ranges from 0 to 31, corresponding to 1 to 32 bits in length.

MTK Confidential A (機密)

ISB The flag selects the target device.

0 Device 0 is selected.

1 Device 1 is selected.

BSI +0008h Data part of data register 0 BSI_D0_DAT

Bit	31	30	29	28	27	26	25	24	23	22	21	20	19	18	17	16
Name	DAT [31:16]															
Type	R/W															
Bit	15	14	13	12	11	10	9	8	7	6	5	4	3	2	1	0
Name	DAT [15:0]															
Type	R/W															

This register is the data part of the data register 0. The legal length of the data is up to 32 bits. The actual number of bits to be transmitted is specified in LEN field in the BSI_D0_CON register.

DAT The field signifies the data part of the data register.

Table 47 lists the address mapping and function of the 27 pairs of data registers.

Register Address	Register Function	Acronym
BSI +0004h	Control part of data register 0	BSI_D0_CON
BSI +0008h	Data part of data register 0	BSI_D0_DAT
BSI +000Ch	Control part of data register 1	BSI_D1_CON
BSI +0010h	Data part of data register 1	BSI_D1_ DAT
BSI +0014h	Control part of data register 2	BSI_D2_CON
BSI +0018h	Data part of data register 2	BSI_D2_ DAT
BSI +001Ch	Control part of data register 3	BSI_D3_CON
BSI +0020h	Data part of data register 3	BSI_D3_ DAT
BSI +0024h	Control part of data register 4	BSI_D4_CON
BSI +0028h	Data part of data register 4	BSI_D4_ DAT
BSI +002Ch	Control part of data register 5	BSI_D5_CON
BSI +0030h	Data part of data register 5	BSI_D5_ DAT
BSI +0034h	Control part of data register 6	BSI_D6_CON
BSI +0038h	Data part of data register 6	BSI_D6_ DAT
BSI +003Ch	Control part of data register 7	BSI_D7_CON
BSI +0040h	Data part of data register 7	BSI_D7_ DAT
BSI +0044h	Control part of data register 8	BSI_D8_CON
BSI +0048h	Data part of data register 8	BSI_D8_ DAT
BSI +004Ch	Control part of data register 9	BSI_D9_CON
BSI +0050h	Data part of data register 9	BSI_D9_ DAT
BSI +0054h	Control part of data register 10	BSI_D10_CON
BSI +0058h	Data part of data register 10	BSI_D10_ DATA
BSI +005Ch	Control part of data register 11	BSI_D11_CON
BSI +0060h	Data part of data register 11	BSI_D11_ DAT
BSI +0064h	Control part of data register 12	BSI_D12_CON
BSI +0068h	Data part of data register 12	BSI_D12_ DAT

聯發科技股份有限公司 MEDIATEK INC. CONFIDENTIAL

BSI +006Ch	Control part of data register 13	BSI_D13_CON
BSI +0070h	Data part of data register 13	BSI_D13_ DAT
BSI +0074h	Control part of data register 14	BSI_D14_CON
BSI +0078h	Data part of data register 14	BSI_D14_ DAT
BSI +007Ch	Control part of data register 15	BSI_D15_CON
BSI +0080h	Data part of data register 15	BSI_D15_ DAT
BSI +0084h	Control part of data register 16	BSI_D16_CON
BSI +0088h	Data part of data register 16	BSI_D16_ DAT
BSI +008Ch	Control part of data register 17	BSI_D17_CON
BSI +0090h	Data part of data register 17	BSI_D17_ DAT
BSI +0094h	Control part of data register 18	BSI_D18_CON
BSI +0098h	Data part of data register 18	BSI_D18_ DAT
BSI +009Ch	Control part of data register 19	BSI_D19_CON
BSI +00A0h	Data part of data register 19	BSI_D19_ DAT
BSI +00A4h	Control part of data register 20	BSI_D20_CON
BSI +00A8h	Data part of data register 20	BSI_D20_ DAT
BSI +00ACh	Control part of data register 21	BSI_D21_CON
BSI +00B0h	Data part of data register 21	BSI_D21_ DAT
BSI +00B4h	Control part of data register 22	BSI_D22_CON
BSI +00B8h	Data part of data register 22	BSI_D22_ DAT
BSI +00BCh	Control part of data register 23	BSI_D23_CON
BSI +00C0h	Data part of data register 23	BSI_D23_ DAT
BSI +00C4h	Control part of data register 24	BSI_D24_CON
BSI +00C8h	Data part of data register 24	BSI_D24_ DAT
BSI +00CCh	Control part of data register 25	BSI_D25_CON
BSI +00D0h	Data part of data register 25	BSI_D25_ DAT
BSI +00D4h	Control part of data register 26	BSI_D26_CON
BSI +00D8h	Data part of data register 26	BSI_D26_ DAT

Table 47 **BSI data registers**

MTK Confidential A (機密)
IWIT
聯發科技股份有限公司
MTK CONFIDENTIAL
NO DISCLOSURE
IWIT

BSI +0190h BSI event enable register BSI_ENA

Bit	15	14	13	12	11	10	9	8	7	6	5	4	3	2	1	0
Name	BSI15	BSI14	BSI13	BSI12	BSI11	BSI10	BSI9	BSI8	BSI7	BSI6	BSI5	BSI4	BSI3	BSI2	BSI1	BSI0
Type	R/W	R/W	R/W	R/W	R/W	R/W	R/W	R/W	R/W	R/W	R/W	R/W	R/W	R/W	R/W	R/W
Reset	1	1	1	1	1	1	1	1	1	1	1	1	1	1	1	1

This register enables an event by setting the corresponding bit. After a hardware reset, all bits are initialized to 1. These bits are also set to 1 after TDMA_EVTVAL pulse.

BSIx Enables downloading of the words corresponding to the events signaled by TMDA_BSI.

- **0** The event is not enabled.
- **1** The event is enabled.

BSI +0194h BSI IO mode control register BSI_IO_CON

Bit	15	14	13	12	11	10	9	8	7	6	5	4	3	2	1	0
Name													SEL_CS1	4_WIRE	DAT_DIR	MODE

Type	R/W	R/W	R/W	R/W	R/W	R/W	R/W	R/W	R/W	R/W	R/W	R/W	R/W	R/W	R/W	R/W
Reset	0	0	0	0	0	0	0	0	0	0	0	0	0	0	1	0

MTK Confidential A (機密)

MODE Defines the source of BSI signal.

- **0** BSI signal is generated by the hardware.
- **1** BSI signal is generated by the software. In this mode, the BSI clock depends on the value of the field DOUT.CLK. BSI_CS depends on the value of the field DOUT.CS and BSI_DATA depends on the value of the field DOUT.DATA.

DAT_DIR Defines the direction of BSI_DATA.

- **0** BSI _DATA is configured as input. The 3-wire interface is used and BSI_DATA is bi-directional.
- **1** BSI_DATA is configured as output.

4_WIRE Defines the BSI_DIN source.

- **0** The 3-wire interface is used and BSI_DATA is bi-directional. BSI_DIN comes from the same pin as BSI_DATA.
- **1** The 4-wire interface is used. Another pin (GPIO) is used as BSI_DIN.

SEL_CS1 Defines which of the BSI_CSx (BSI_CS0 or BSI_CS1) is written by the software.

- **0** BSI_CS0 is selected.
- **1** BSI_CS1 is selected.

BSI +0198h Software-programmed data out BSI_DOUT

Bit	15	14	13	12	11	10	9	8	7	6	5	4	3	2	1	0
Name														DATA	CS	CLK
Type	R/W	R/W	R/W	R/W	R/W	R/W	R/W	R/W	R/W	R/W	R/W	R/W	R/W	W	W	W
Reset	0	0	0	0	0	0	0	0	0	0	0	0	0	0	0	0

聯發機密不得洩漏

CLK Signifies the BSI_CLK signal.

CS Signifies the BSI_CS signal.

DATA Signifies the BSI_DATA signal.

BSI +019ch Input data from RF chip BSI_DIN

Bit	15	14	13	12	11	10	9	8	7	6	5	4	3	2	1	0
Name																DIN
Type	R/W	R/W	R/W	R/W	R/W	R/W	R/W	R/W	R/W	R/W	R/W	R/W	R/W	R/W	R/W	R
Reset	0	0	0	0	0	0	0	0	0	0	0	0	0	0	0	0

DIN Registers the input value of BSI_DATA from the RF chip.

MTK CONFIDENTIAL
NO DISCLOSURE

8.2 Baseband Parallel Interface

8.2.1 General Description

The Baseband Parallel Interface features 10 control pins, which are used for timing-critical external circuits. These pins typically control front-end components which must be turned on or off at specific times during GSM operation, such as transmit-enable, band switching, TR-switch, etc.

IWIT

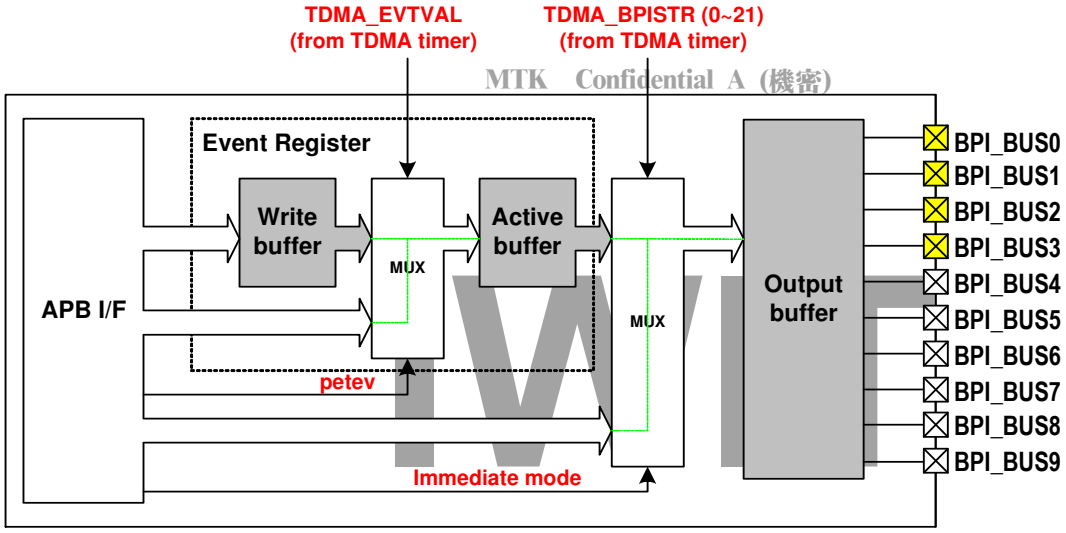

☒ The driving capability is configurable.

☒ The driving capability is fixed.

Figure 80 **Block diagram of BPI interface**

The user can program 26 sets of 10-bit registers to set the output value of BPI_BUS0~BPI_BUS9. The data is stored in the write buffers. The write buffers are then forwarded to the active buffers when the TDMA_EVTVAL signal is pulsed, usually once per frame. Each of the 26 write buffers corresponds to an active buffer, as well as to a TDMA event.

Each TDMA_BPISTR event triggers the transfer of data in the corresponding active buffer to the output buffer, thus changing the value of the BPI bus. The user can disable the events by programming the enable registers in the TDMA timer. If the TDMA_BPISTR event is disabled, the corresponding signal TDMA_BPISTR is not pulsed, and the value on the BPI bus remains unchanged.

For applications in which BPI signals serve as the switch, current-driving components are typically added to enhance driving capability. Four configurable output pins provide current up to 8 mA, and help reduce the number of external components. The output pins BPI_BUS6, BPI_BUS7, BPI_BUS8, and BPI_BUS9 are multiplexed with GPIO. Please refer to the GPIO table for more detailed information.

8.2.2 Register Definitions

BPI+0000h BPI control register BPI_CON

Bit	15	14	13	12	11	10	9	8	7	6	5	4	3	2	1	0
Name												PINM3	PINM2	PINM1	PINM0	PETEV
Type												WO	WO	WO	WO	R/W
Reset												0	0	0	0	0

This register is the control register of the BPI unit. The register controls the direct access mode of the active buffer and the current driving capability for the output pins.

The driving capabilities of BPI_BUS0, BPI_BUS1, BPI_BUS2, and BPI_BUS3 can be 2 mA or 8 mA, determined by the value of PINM0, PINM1, PINM2, and PINM3, respectively. These output pins provide a higher driving capability and save on external current-driving components. In addition to the configurable pins, pins BPI_BUS4 to BPI_BUS9 provide a driving capability of 2 mA (fixed).

PETEV Enables direct access to the active buffer.

聯發機密不得洩漏
MTK CONFIDENTIAL
NO DISCLOSURE
IWIT

0 The user writes data to the write buffer. The data is latched in the active buffer after the TDMA_EVTVAL signal is pulsed.

MTK Confidential A (機密)

1 The user directly writes data to the active buffer without waiting for the TDMA_EVTVAL signal.

PINM0 Controls the driving capability of BPI_BUS0.

0 The output driving capability is 2mA.

1 The output driving capability is 8mA.

PINM1 Controls the driving capability of BPI_BUS1.

0 The output driving capability is 2mA.

1 The output driving capability is 8mA.

PINM2 Controls the driving capability of BPI_BUS2.

0 The output driving capability is 2mA.

1 The output driving capability is 8mA.

PINM3 Controls the driving capability of BPI_BUS3.

0 The output driving capability is 2mA.

1 The output driving capability is 8mA.

WIT

BPI +0004h BPI data register 0 BPI_BUF0

Bit	15	14	13	12	11	10	9	8	7	6	5	4	3	2	1	0
Name							PO9	PO8	PO7	PO6	PO5	PO4	PO3	PO2	PO1	PO0
Type							R/W	R/W	R/W	R/W	R/W	R/W	R/W	R/W	R/W	R/W

This register defines the BPI signals that are associated with the event TDMA_BPI0.

Table 48 lists 26 registers of the same structure, each of which is associated with one specific event signal from the TDMA timer. The data registers are all double-buffered. When PETEV is set to 0, the data register links to the write buffer. When PETEV is set to 1, the data register links to the active buffer.

驗發機密 不得洩漏

One register, BPI_BUFI, is dedicated for use in immediate mode. Writing a value to that register effects an immediate change in the corresponding BPI signal and bus.

POx This flag defines the corresponding signals for BPIx after the TDMA event 0 takes place.

The overall data register definition is listed in **Table 48.**

MTK CONFIDENTIAL
NO DISCLOSURE

Register Address	Register Function	Acronym
BPI +0004h	BPI pin data for event TDMA_BPI 0	BPI_BUF0
BPI +0008h	BPI pin data for event TDMA_BPI 1	BPI_BUF1
BPI +000Ch	BPI pin data for event TDMA_BPI 2	BPI_BUF2
BPI +0010h	BPI pin data for event TDMA_BPI 3	BPI_BUF3
BPI +0014h	BPI pin data for event TDMA_BPI 4	BPI_BUF4
BPI +0018h	BPI pin data for event TDMA_BPI 5	BPI_BUF5
BPI +001Ch	BPI pin data for event TDMA_BPI 6	BPI_BUF6
BPI +0020h	BPI pin data for event TDMA_BPI 7	BPI_BUF7
BPI +0024h	BPI pin data for event TDMA_BPI 8	BPI_BUF8
BPI +0028h	BPI pin data for event TDMA_BPI 9	BPI_BUF9
BPI +002Ch	BPI pin data for event TDMA_BPI 10	BPI_BUF10
BPI +0030h	BPI pin data for event TDMA_BPI 11	BPI_BUF11
BPI +0034h	BPI pin data for event TDMA_BPI 12	BPI_BUF12
BPI +0038h	BPI pin data for event TDMA_BPI 13	BPI_BUF13
BPI +003Ch	BPI pin data for event TDMA_BPI 14	BPI_BUF14
BPI +0040h	BPI pin data for event TDMA_BPI 15	BPI_BUF15

WIT

BPI +0044h	BPI pin data for event TDMA_BPI 16	BPI_BUF16
BPI +0048h	BPI pin data for event TDMA_BPI 17	BPI_BUF17
BPI +004Ch	BPI pin data for event TDMA_BPI 18	BPI_BUF18
BPI +0050h	BPI pin data for event TDMA_BPI 19	BPI_BUF19
BPI +0054h	BPI pin data for event TDMA_BPI 20	BPI_BUF20
BPI +0058h	BPI pin data for event TDMA_BPI 21	BPI_BUF21
BPI +005Ch	BPI pin data for event TDMA_BPI 22	BPI_BUF22
BPI +0060h	BPI pin data for event TDMA_BPI 23	BPI_BUF23
BPI +0064h	BPI pin data for event TDMA_BPI 24	BPI_BUF24
BPI +0068h	BPI pin data for event TDMA_BPI 25	BPI_BUF25
BPI +0090h	BPI pin data for immediate mode	BPI_BUFI

Table 48 **BPI Data Registers.**

BPI +0094h BPI event enable register 0 BPI_ENA0

Bit	15	14	13	12	11	10	9	8	7	6	5	4	3	2	1	0
Name	BEN15	BEN14	BEN13	BEN12	BEN11	BEN10	BEN9	BEN8	BEN7	BEN6	BEN5	BEN4	BEN3	BEN2	BEN1	BEN0
Type	R/W	R/W	R/W	R/W	R/W	R/W	R/W	R/W	R/W	R/W	R/W	R/W	R/W	R/W	R/W	R/W
Reset	1	1	1	1	1	1	1	1	1	1	1	1	1	1	1	1

This register enables the events that are signaled by the TDMA timer: by clearing a register bit, the corresponding event signal is ignored. After a hardware reset, all the enable bits default to 1 (enabled). Upon receiving a TDMA_EVTVAL pulse, all register bits are also set to 1 (enabled).

BENn This flag indicates whether event n signals are heeded or ignored.

0 Event n is disabled (ignored).

1 Event n is enabled.

BPI+0098h BPI event enable register 1 BPI_ENA1

Bit	15	14	13	12	11	10	9	8	7	6	5	4	3	2	1	0
Name							BEN25	BEN24	BEN23	BEN22	BEN21	BEN20	BEN19	BEN18	BEN17	BEN16
Type							R/W	R/W	R/W	R/W	R/W	R/W	R/W	R/W	R/W	R/W
Reset							0	0	0	0	0	0	0	0	0	0

This register enables the events that are signaled by the TDMA timing generator: by clearing a register bit, the corresponding event signal is ignored. After a hardware reset, all the enable bits default to 1 (enabled). Upon receiving the TDMA_EVTVAL pulse, all register bits are also set to 1 (enabled).

BENn This flag indicates whether event n signals are heeded or ignored.

0 Event n is disabled (ignored).

1 Event n is enabled.

8.3 Automatic Power Control (APC) Unit

8.3.1 General Description

The Automatic Power Control (APC) unit controls the Power Amplifier (PA) module. Through APC unit, the proper transmit power level of the handset can be set to ensure that burst power ramping requirements are met. In one TDMA frame, up to 7 TDMA events can be enabled to support multi-slot transmission. In practice, 5 banks of ramp profiles are used in one frame to make up 4 consecutive transmission slots.

MTK Confidential A (機密)
IWIT
聯發機密不得洩漏
MTK CONFIDENTIAL
NO DISCLOSURE
IWIT

The shape and magnitude of the ramp profiles are configurable to fit ramp-up (ramp up from zero), intermediate ramp (ramp between transmission windows), and ramp-down (ramp down to zero) profiles. Each bank of the ramp profile consists of 16 8-bit unsigned values, which are adjustable for different conditions.

MTK Confidential A (機密)

The entries from one bank of the ramp profile are partitioned into two parts, with 8 values in each half. In normal operation, the entries in the left half are multiplied by a 10-bit left scaling factor, and the entries in the right half are multiplied by a 10-bit right scaling factor. The values are then truncated to form 16 10-bit intermediate values. Finally the intermediate ramp profile are linearly interpolated into 32 10-bit values and sequentially used to update the D/A converter. The block diagram of the APC unit is shown in **Figure 81 .**

The APB bus interface is 32 bits wide. Four write accesses are required to program each bank of ramp profile. The detailed register allocations are listed in **Table 49.**

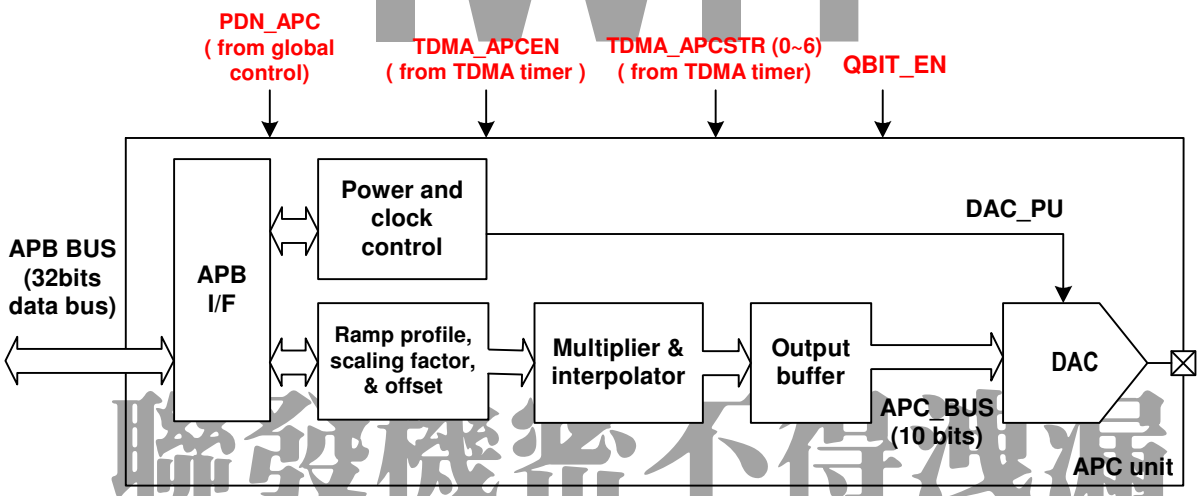

Figure 81 **Block diagram of APC unit.**

8.3.2 Register Definitions

APC+0000h APC 1st ramp profile #0 APC_PFA0

Bit	31	30	29	28	27	26	25	24	23	22	21	20	19	18	17	16
Name	ENT3								ENT2							
Type	R/W								R/W							
Bit	15	14	13	12	11	10	9	8	7	6	5	4	3	2	1	0
Name	ENT1								ENT0							
Type	R/W								R/W							

The register stores the first four entries of the first power ramp profile. The first entry resides in the least significant byte [7:0], the second entry in the second byte [15:8], the third entry in the third byte [23:16], and the fourth in the most significant byte [31:24]. Since this register provides no hardware reset, the programmer must configure it before any APC event takes place.

ENT3 The field signifies the 4th entry of the 1st ramp profile.
ENT2 The field signifies the 3rd entry of the 1st ramp profile.
ENT1 The field signifies the 2nd entry of the 1st ramp profile.
ENT0 The field signifies the 1st entry of the 1st ramp profile.

The overall ramp profile register definition is listed in **Table 49.**

Register Address	Register Function	Acronym
APC +0000h	APC 1st ramp profile #0	APC_PFA0
APC +0004h	APC 1st ramp profile #1	APC_PFA1

MTK CONFIDENTIAL
NO DISCLOSURE
聯發機密不得洩漏

APC +0008h	APC 1st ramp profile #2	APC_PFA2
APC +000Ch	APC 1st ramp profile #3	APC_PFA3
APC +0020h	APC 2nd ramp profile #0	APC_PFB0
APC +0024h	APC 2nd ramp profile #1	APC_PFB1
APC +0028h	APC 2nd ramp profile #2	APC_PFB2
APC +002Ch	APC 2nd ramp profile #3	APC_PFB3
APC +0040h	APC 3rd ramp profile #0	APC_PFC0
APC +0044h	APC 3rd ramp profile #1	APC_PFC1
APC +0048h	APC 3rd ramp profile #2	APC_PFC2
APC +004Ch	APC 3rd ramp profile #3	APC_PFC3
APC +0060h	APC 4th ramp profile #0	APC_PFD0
APC +0064h	APC 4th ramp profile #1	APC_PFD1
APC +0068h	APC 4th ramp profile #2	APC_PFD2
APC +006Ch	APC 4th ramp profile #3	APC_PFD3
APC +0080h	APC 5th ramp profile #0	APC_PFE0
APC +0084h	APC 5th ramp profile #1	APC_PFE1
APC +0088h	APC 5th ramp profile #2	APC_PFE2
APC +008Ch	APC 5th ramp profile #3	APC_PFE3
APC +00A0h	APC 6th ramp profile #0	APC_PFF0
APC +00A4h	APC 6th ramp profile #1	APC_PFF1
APC +00A8h	APC 6th ramp profile #2	APC_PFF2
APC +00ACh	APC 6th ramp profile #3	APC_PFF3
APC +00C0h	APC 7th ramp profile #0	APC_PFG0
APC +00C4h	APC 7th ramp profile #1	APC_PFG1
APC +00C8h	APC 7th ramp profile #2	APC_PFG2
APC +00CCh	APC 7th ramp profile #3	APC_PFG3

Table 49 **APC ramp profile registers**

MTK Confidential A (機密)
MTK CONFIDENTIAL
NO DISCLOSURE
IWIT

APC +0010h APC 1st ramp profile left scaling factor APC_SCAL0L

Bit	15	14	13	12	11	10	9	8	7	6	5	4	3	2	1	0
Name							SF									
Type							R/W									
Reset							1_0000_0000									

The register stores the left scaling factor of the 1st ramp profile. This factor multiplies the first 8 entries of the 1st ramp profile to provide the scaled profile, which is then interpolated to control the D/A converter.

After a hardware reset, the initial value of the register is 256. In this case, no scaling is done (each entry of the ramp profile is multiplied by 1), because the 8 least significant bits are truncated after multiplication.

The overall scaling factor register definition is listed in **Table 50 .**

SF Scaling factor. After a hardware reset, the value is 256.

APC +0014h APC 1st ramp profile right scaling factor APC_SCAL0R

Bit	15	14	13	12	11	10	9	8	7	6	5	4	3	2	1	0
Name							SF									
Type							R/W									
Reset							1_0000_0000									

The register stores the right scaling factor of the 1st ramp profile. This factor multiplies the last 8 entries of the 1st ramp profile to provide the scaled profile, which is then interpolated to control the D/A converter.

MTK Confidential A (機密)

After a hardware reset, the initial value of the register is 256. In this case, no scaling is done (each entry of the ramp profile is multiplied by 1), because the 8 least significant bits are truncated after multiplication.

The overall scaling factor register definition is listed in **Table 50 .**

SF Scaling factor. After a hardware reset, the value is 256.

APC+0018h APC 1st ramp profile offset value APC_OFFSET0

Bit	15	14	13	12	11	10	9	8	7	6	5	4	3	2	1	0
Name											OFFSET					
Type											R/W					
Reset											0					

There are 7 offset values for the corresponding ramp profile.

The 1st offset value also serves as the pedestal value. The value is used to power up the APC D/A converter before the RF signals start to transmit. The D/A converter is then biased on the value, to provide the initial control voltage for the external control loop. The exact value depends on the characteristics of the external components. The timing to output the pedestal value is configurable through the TDMA_BULCON2 register of the timing generator; its valid range is 0~127 quarter-bits of time after the baseband D/A converter is powered up.

OFFSET Offset value for the corresponding ramp profile. After a hardware reset, the default value is 0.

The overall offset register definition is listed in **Table 50.**

聯發機密不得洩漏
MTK CONFIDENTIAL
NO DISCLOSURE

Register Address	Register Function	Acronym
APC +0010h	APC 1st ramp profile left scaling factor	APC_SCAL0L
APC +0014h	APC 1st ramp profile right scaling factor	APC_SCAL0R
APC +0018h	APC 1st ramp profile offset value	APC_OFFSET0
APC +0030h	APC 2nd ramp profile left scaling factor	APC_SCAL1L
APC +0034h	APC 2nd ramp profile right scaling factor	APC_SCAL1R
APC +0038h	APC 2nd ramp profile offset value	APC_OFFSET1
APC +0050h	APC 3rd ramp profile left scaling factor	APC_SCAL2L
APC +0054h	APC 3rd ramp profile right scaling factor	APC_SCAL2R
APC +0058h	APC 3rd ramp profile offset value	APC_OFFSET2
APC +0070h	APC 4th ramp profile left scaling factor	APC_SCAL3L
APC +0074h	APC 4th ramp profile right scaling factor	APC_SCAL3R
APC +0078h	APC 4th ramp profile offset value	APC_OFFSET3
APC +0090h	APC 5th ramp profile left scaling factor	APC_SCAL4L
APC +0094h	APC 5th ramp profile right scaling factor	APC_SCAL4R
APC +0098h	APC 5th ramp profile offset value	APC_OFFSET4
APC +00B0h	APC 6th ramp profile left scaling factor	APC_SCAL5L
APC +00B4h	APC 6th ramp profile right scaling factor	APC_SCAL5R
APC +00B8h	APC 6th ramp profile offset value	APC_OFFSET5
APC +00D0h	APC 7th ramp profile left scaling factor	APC_SCAL6L
APC +00D4h	APC 7th ramp profile right scaling factor	APC_SCAL6R
APC +00D8h	APC 7th ramp profile offset value	APC_OFFSET6

Table 50 **APC scaling factor and offset value registers**

APC+00E0h APC control register APC_CON

Bit	15	14	13	12	11	10	9	8	7	6	5	4	3	2	1	0
Name															GSM	FPU
Type															R/W	R/W
Reset															1	0

MTK Confidential A (機密)

GSM Defines the operation mode of the APC module. In GSM mode, each frame has only one slot, thus only one scaling factor and one offset value must be configured. If the GSM bit is set, the programmer needs only to configure APC_SCAL0L and APC_OFFSET0. If the bit is not set, the APC module is operating in GPRS mode.

- **0** The APC module is operating in GPRS mode.
- **1** The APC module is operating in GSM mode. Default value.

FPU Forces the APC D/A converter to power up. Test only.

- **0** The APC D/A converter is not forced to power up. The converter is only powered on when the transmission window is opened. Default value.
- **1** The APC D/A converter is forced to power up.

8.3.3 Ramp Profile Programming

The first value of the first normalized ramp profile must be written in the least significant byte of the APC_PFA0 register. The second value must be written in the second least significant byte of the APC_PFA0, and so on.

Each ramp profile can be programmed to form an arbitrary shape.

The start of ramping is triggered by one of the TDMA_APCSTR signals. The timing relationship between TDMA_APCSTR and TDMA slots is depicted in **Figure 82** 錯誤！找不到參照來源。 for 4 consecutive time slots case. The power ramping profile must comply with the timing mask defined in GSM SPEC 05.05. The timing offset values for 7 ramp profiles are stored in the TDMA timer register from TDMA_APC0 to TDMA_APC6.

聯發機密不得洩漏

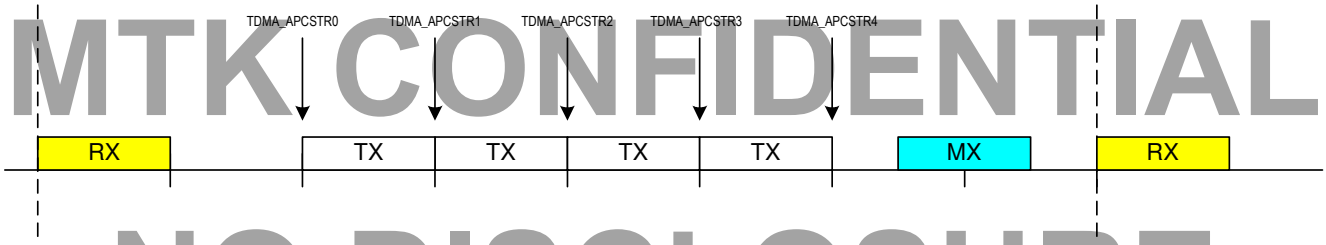

MTK CONFIDENTIAL
NO DISCLOSURE

Figure 82 **Timing diagram of TDMA_APCSTR.**

Because the APC unit provides more than 5 ramp profiles, up to 4 consecutive transmission slots can accommodated. The 2 additional ramp profiles are useful particularly when the timing between the last 2 transmission time slots and CTIRQ is uncertain; software can begin writing the ramp profiles for the succeeding frame during the current frame, alleviating the risk of not writing the succeeding frame's profile data in time.

In GPRS mode, to fit the intermediate ramp profile between different power levels, a simple scaling scheme is used to synthesize the ramp profile. The equation is as follows:

IWIT

$$DA_0 = OFF + S_0 \cdot \frac{DN_{15,pre} + DN_0}{2}$$

MTK Confidential A (機密)

$$DA_{2k} = OFF + S_l \cdot \frac{DN_{k-1} + DN_k}{2}, k = 1,...,15$$

$$DA_{2k+1} = OFF + S_l \cdot DN_k, k = 0,1,...,15$$

$$l = \begin{cases} 0, & \text{if } 8 > k \geq 0 \\ 1, & \text{if } 15 \geq k \geq 8 \end{cases}$$

where **DA** = the data to present to the D/A converter,
DN = the normalized data which is stored in the register **APC_PF*n***,
S_0 = the left scaling factor stored in register **APC_SCAL*nL***,
S_1 = the right scaling factor stored in register **APC_SCAL*nR***, and
OFF = the offset value stored in the register **APC_OFFSET*n***.

The subscript ***n*** denotes the index of the ramp profile.

The ramp calculation before interpolation is as depicted in **Figure 83** 錯誤！找不到參照來源。.

During each ramp process, each word of the normalized profile is first multiplied by 10-bit scaling factors and added to an offset value to form a bank of 18-bit words. The first 8 words (in the left half part as in **Figure 83** 錯誤！找不到參照來源。) are multiplied by the left scaling factor **S_0** and the last 8 words (in the right half part as in **Figure 83** 錯誤！找不到參照來源。) are multiplied by the right scaling factor **S_1**. The lowest 8 bits of each word are then truncated to get a 10-bit result. The scaling factor is 0x100, which represents no scaling on reset. A value smaller than 0x100 scales the ramp profile down, and a value larger than 100 scales the ramp profile up.

聯發機密不得洩漏

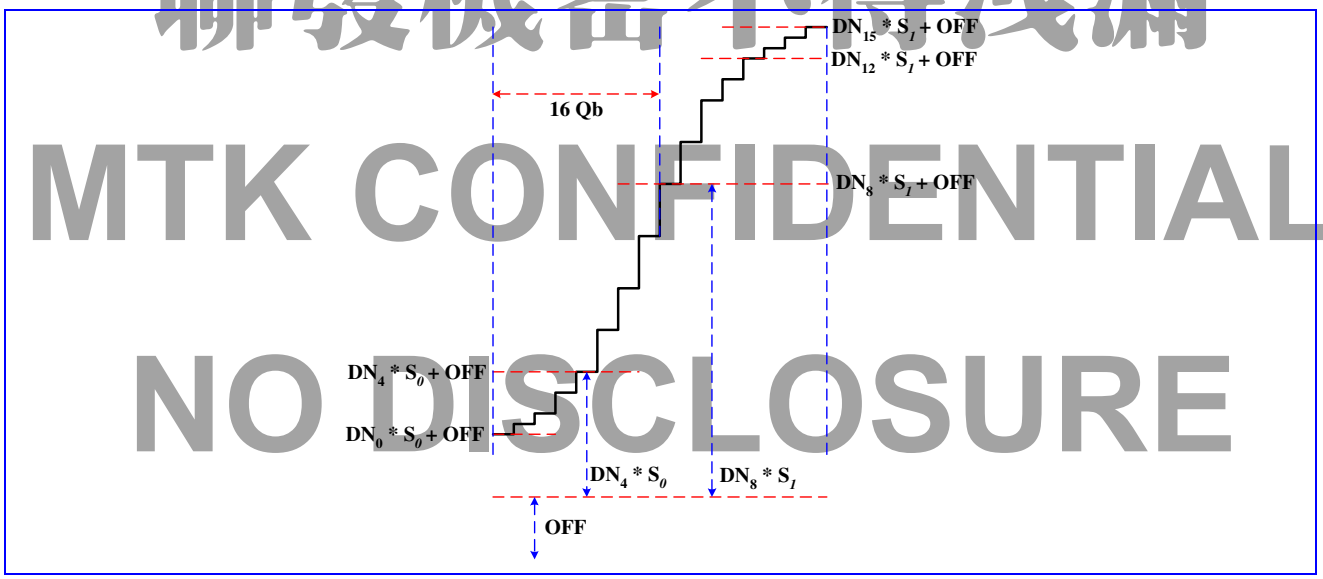

MTK CONFIDENTIAL
NO DISCLOSURE

Figure 83 **The timing diagram of the APC ramp.**

The 16 10-bit words are linearly interpolated into 32 10-bit words. A 10-bit D/A converter is then used to convert these 32 ramp values at a rate of 1.0833 MHz, that is, at quarter-bit rate. The timing diagram is shown in **Figure 84 錯誤！找不到參照來源。** and the final value is retained on the output until the next event occurs.

IWIT

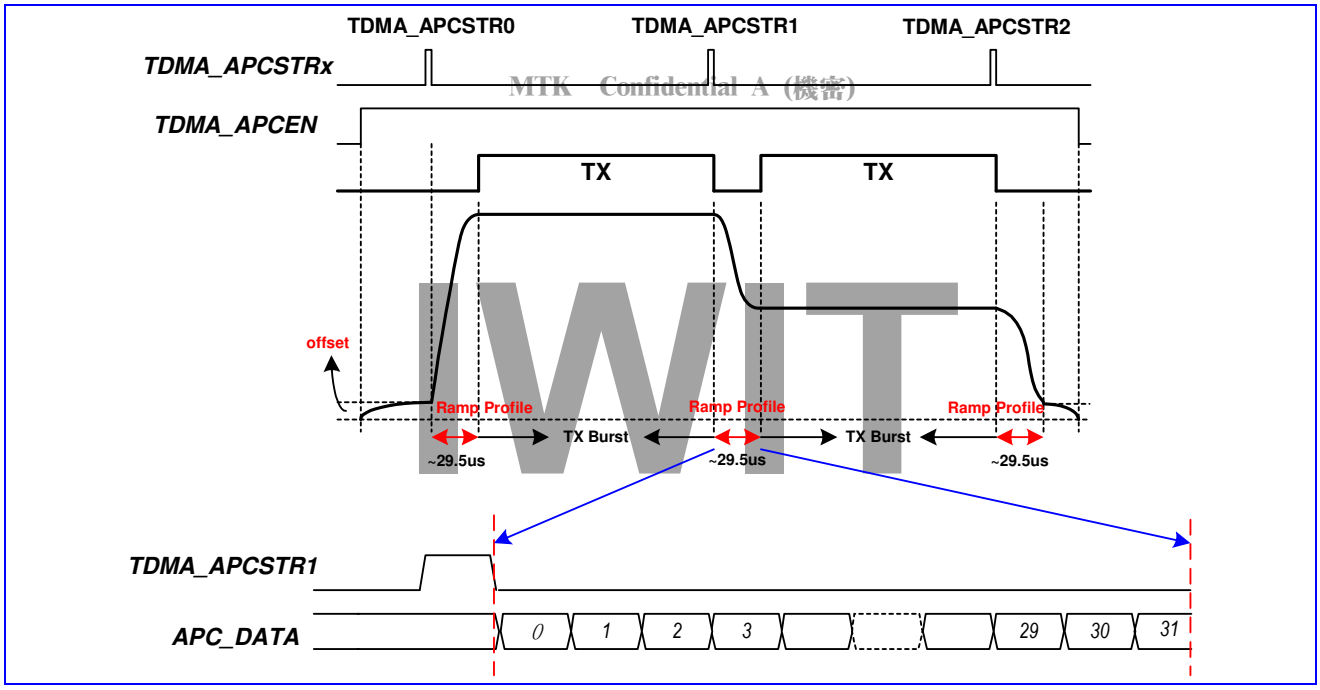

Figure 84 **Timing diagram of the APC ramping.**

The APC unit is only powered up when the APC window is open. The APC window is controlled by configuring the TDMA registers TDMA_BULCON1 and TDMA_BULCON2. Please refer to the TDMA timer unit for more detailed information.

The first offset value stored in the register APC_OFFSET0 also serves as the pedestal value, which is used to provide the initial power level for the PA.

Since the profile is not double-buffered, the timing to write the ramping profile is critical. The programmer must be restricted from writing to the data buffer during the ramping process, otherwise the ramp profile may be incorrect and lead to a malfunction.

聯發機密不得洩漏
MTK CONFIDENTIAL
NO DISCLOSURE
IWIT

8.4 Automatic Frequency Control (AFC) Unit

8.4.1 General Description

The Automatic Frequency Control (AFC) unit provides the direct control of the oscillator for frequency offset and Doppler shift compensation. The block diagram is of the AFC unit depicted in **Figure 85**. The module utilizes a 13-bit D/A converter to achieve high-resolution control. Two modes of operation provide flexibility when controlling the oscillator; they are described as follows.

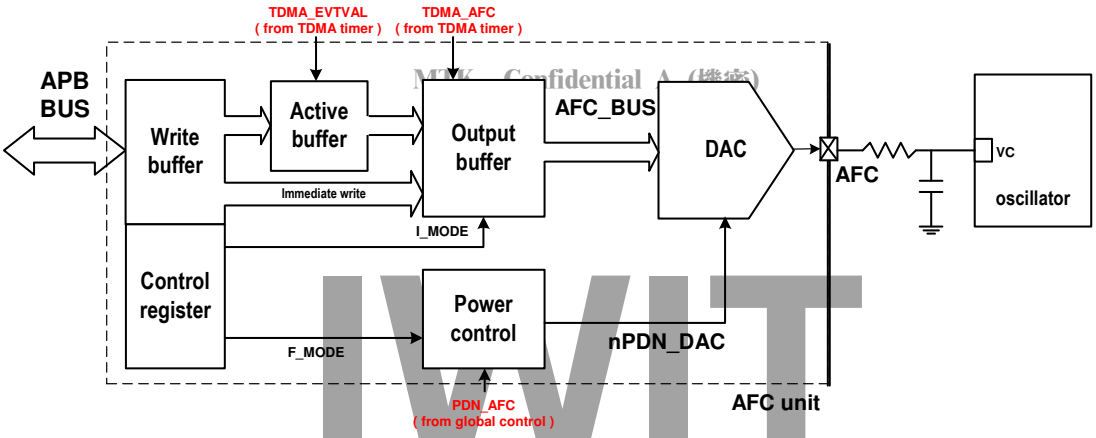

Figure 85 Block Diagram of the AFC Controller

In timer-triggered mode, the TDMA timer controls the AFC enabling events. Each TDMA frame can pulse at most four events. Double buffer architecture is supported. AFC values can be written to the write buffers. When the signal TDMA_EVTVAL is received, the values in the write buffers are latched into the active buffers. However, AFC values can also be written to the active buffers directly. Each event is associated with an active buffer sharing the same index. When a TDMA event is triggered by TDMA_AFC, the value in the corresponding active buffer takes effect. **Figure 86** shows a timing diagram of AFC events with respect to TX/RX/MX windows. In this mode, the D/A converter can stay powered on or be powered on for a programmable duration (256 quarter-bits, by default). The latter option is for power saving.

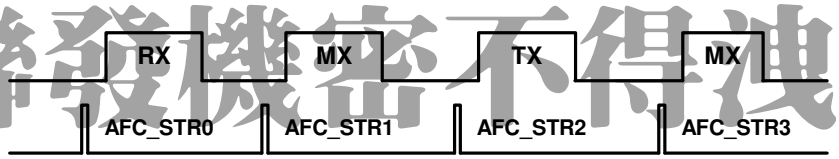

Figure 86 Timing Diagram for the AFC Controller

In immediate mode, the MCU can directly control the AFC value without event-triggering. The value written by the MCU takes effect immediately. In this mode, the D/A converter must be powered on continuously. When transitioning from immediate mode into timer-triggered mode (by setting flag I_MODE in the register AFC_CON to be 0), the D/A converter is kept powered on for a programmable duration (256 quarter-bits by default) if a TDMA_AFC is not been pulsed. The duration is prolonged upon receiving events.

聯發機密不得洩漏
MTK CONFIDENTIAL
NO DISCLOSURE
IWIT

8.4.2 Register Definitions

AFC+0000h AFC control register AFC_CON

Bit	15	14	13	12	11	10	9	8	7	6	5	4	3	2	1	0
Name													RDACT	F_MODE	FETENV	I_MODE
Type													R/W	R/W	R/W	R/W
Reset													0	0	0	0

Four control modes are defined and can be controlled through the AFC control register.

RDACT The flag enables the direct read operation from the active buffer. Note that the control flag is only applicable to the four data buffers AFC_DAT0, AFC_DAT1, AFC_DAT2, and AFC_DAT3.

- **0** APB read from the write buffer.
- **1** APB read from the active buffer.

FETENV The flag enables the direct write operation to the active buffer. Note that the control flag is only applicable to the four data buffers AFC_DAT0, AFC_DAT1, AFC_DAT2, and AFC_DAT3.

0 APB write to the write buffer.

1 APB write to the active buffer.

MTK Confidential A (機密)

F_MODE The flag enables the force power up mode.

0 The force power up mode is not enabled.

1 The force power up mode is enabled.

I_MODE The flag enables immediate mode. To enable immediate mode, force power up mode must also be enabled.

0 Immediate mode is not enabled.

1 Immediate mode is enabled.

IWIT

AFC +0004h AFC data register 0 AFC_DAT0

Bit	15	14	13	12	11	10	9	8	7	6	5	4	3	2	1	0
Name				AFCD												
Type				R/W												

The register stores the AFC value for the event 0 triggered by the TDMA timer in timer-triggered mode. When the RDACT or FETENV bit (of the AFC_CON register) is set, the data transfer operates on the active buffer. When neither flag is set, the data transfer operates on the write buffer.

AFCD The AFC sample for the D/A converter.

Four registers (AFC_DAT0, AFC_DAT1, AFC_DAT2, AFC_DAT3) of the same type correspond to the event triggered by the TDMA timer. The four registers are summarized in **Table 51**.

Register Address	Register Function	Acronym
AFC +0004h	AFC control value 0	AFC_DAT0
AFC +0008h	AFC control value 1	AFC_DAT1
AFC +000Ch	AFC control value 2	AFC_DAT2
AFC +0010h	AFC control value 3	AFC_DAT3

Table 51 AFC Data Registers

聯發機密不得洩漏
MTK CONFIDENTIAL

Immediate mode can only use AFC_DAT0. In this mode, only the control value in the AFC_DAT0 write buffer is used to control the D/A converter. Unlike timer-triggered mode, the control value in AFC_DAT0 write buffer can bypass the active buffer stage and be directly coupled to the output buffer in immediate mode. To use immediate mode, program the AFC_DAT0 in advance and then enable immediate mode by setting the I_MODE flag in the AFC_CON register.

NO DISCLOSURE

The registers AFC_DATA0, AFC_DAT1, AFC_DAT2, and AFC_DAT3 have no initial values, thus the register must be programmed before any AFC event takes place. The AFC value for the D/A converter, i.e., the output buffer value, is initially 0 after power up before any event occurs.

AFC +0014h AFC power up period AFC_PUPER

Bit	15	14	13	12	11	10	9	8	7	6	5	4	3	2	1	0
Name				PU_PER												
Type				R/W												
Reset				ff												

IWIT

This register stores the AFC power up period, which is 13 bits wide. The value ranges from 0 to 8191. If the I_MODE or F_MODE flag is set, this register has no effect since the D/A converter is powered up continuously. If neither flag is set, the register controls the power up duration of the D/A converter. During that period, the signal nPDN_DAC in **Figure 85** is set to 1(power up).

PU_PER Stores the AFC power up period. After hardware power up, the field is initialized to 255.

MTK Confidential A (機密)

9 Baseband Front End

Baseband Front End is a modem interface between TX/RX mixed-signal modules and digital signal processor (DSP). We can divide this block into two parts (see 錯誤! 找不到參照來源。). The first is the uplink (transmitting) path, which converts bit-stream from DSP into digital in-phase (I) and quadrature (Q) signals for TX mixed-signal module. The second part is the downlink (receiving) path, which receives digital in-phase (I) and quadrature (Q) signals from RX mixed-signal module, performs FIR filtering and then sends results to DSP. 錯誤! 找不到參照來源。 illustrates interconnection around Baseband Front End. In the figure the shadowed blocks compose Baseband Front End.

The uplink path is mainly composed of GMSK Modulator and uplink parts of Baseband Serial Ports, and the downlink path is mainly composed of RX digital FIR filter, RX interference detection filter (ITD) including power measurement blocks, downlink parts of Baseband Serial Ports and DSP I/O. Baseband Serial Ports is a serial interface used to communicate with DSP. In addition, there is a set of control registers in Baseband Front End that is intended for control of TX/RX mixed-signal modules, inclusive of several compensation circuit: calibration of I/Q DC offset, I/Q Quadrature Phase Compensation and I/Q Gain Mismatch of uplink analog-to-digital (D/A) converters as well as I/Q Gain Mismatch for downlink digital-to-analog (A/D) converters in TX/RX mixed-signal modules. The timing of bit streaming through Baseband Front End is completely under control of TDMA timer. Usually only either of uplink and downlink paths is active at one moment. However, both of the uplink and downlink paths will be active simultaneously when Baseband Front End is in loopback mode.

When either of TX windows in TDMA timer is opened, the uplink path in Baseband Front End will be activated. Accordingly components on the uplink path such as GMSK Modulator will be powered on, and then TX mixed-signal module is also powered on. The sub-block Baseband Serial Ports will sink TX data bits from DSP and then forward them to GMSK Modulator. The outputs from GMSK Modulator are sent to TX mixed-signal module in format of I/Q signals. Finally D/A conversions are performed in TX mixed-signal module and the output analog signal is output to RF module.

Similarly, while either of RX windows in TDMA timer is opened, the downlink path in Baseband Front End will be activated. Accordingly components on the downlink path such as RX mixed-signal module and RX digital FIR filter are then powered on. First A/D conversions are performed in RX mixed-signal module, and then the results in format of I/Q signals are sourced to Low Pass Filtering with different bandwidth (Narrow one about F_C = 90 kHz, Wide one about F_C = 110khz), Interference Detection Circuit to determine which Filter to be used by judging receiving power on current burst. Additionally, "I/Q Compensation Circuit" is an option in data path for modifying Receiving I/Q pair gain mismatch. Finally the results will be sourced to DSP through Baseband Serial Ports.

IWIT
聯發機密不得洩漏
MTK CONFIDENTIAL
NO DISCLOSURE
IWIT

MTK Confidential A (機密)

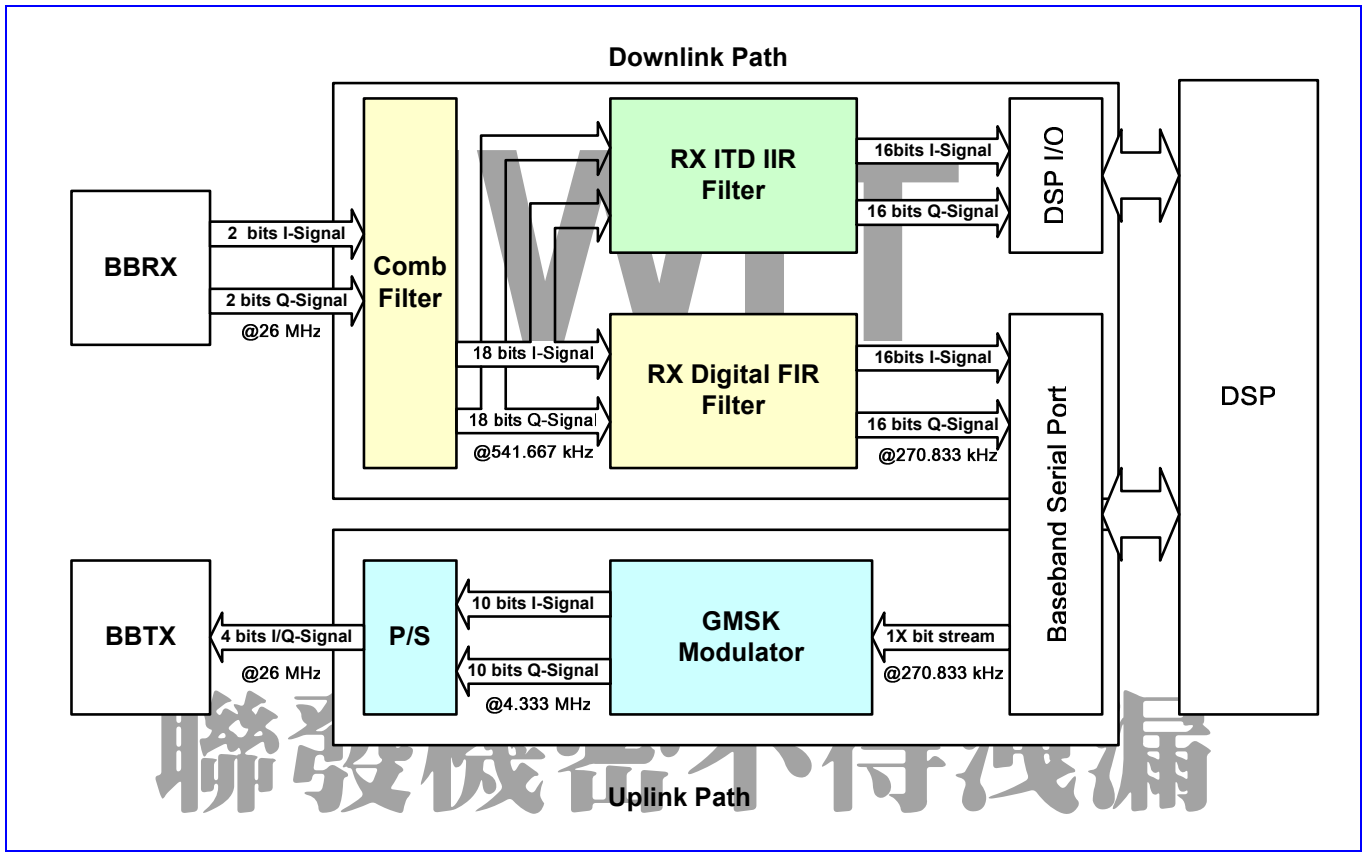

Figure 87 Block Diagram of Baseband Front End

MTK CONFIDENTIAL

9.1 Baseband Serial Ports

9.1.1 General Description

Baseband Front End communicates with DSP through the sub block of Baseband Serial Ports. Baseband Serial Ports interfaces with DSP in serial manner. This implies that DSP must be configured carefully in order to have Baseband Serial Ports cooperate with DSP core correctly.

NO DISCLOSURE

If downlink path is programmed in bypass-filter mode (**NOT** bypass-filter loopback mode), behavior of Baseband Serial Ports will be completely be different from that in normal function mode. The special mode is for testing purpose. Please see the subsequent section of Downlink Path for more details.

TX and RX windows are under control of TDMA timer. Please refer to functional specification of TDMA timer for the details on how to open/close a TX/RX window. Opening/Closing of TX/RX windows have two major effects on Baseband Front End: power on/off of corresponding components and data souring/sinking. It is worth noticing that Baseband Serial Ports is only intended for sinking TX data from DSP or sourcing data to DSP. It does not involve power on/off of TX/RX mixed-signal modules.

IWIT

As far as downlink path is concerned, if a RX window is opened by TDMA timer Baseband Front End will have RX mixed-signal module proceed to make A/D conversion, two parallel RX digital filter proceed to perform filtering and Baseband Serial Ports be activated to source data from RX digital filter to Master DSP while Power Measurement through

MTK Confidential A (機密)

DSP I/O to DSP no matter the data is meaningful or not. However, the interval between the moment that RX mixed-signal module is powered on and the moment that data proceed to be dumped by Baseband Serial Ports can be well controlled in TDMA timer. Let us denote RX enable window as the interval that RX mixed-signal module is powered on and denote RX dump window as the interval that data is dumped by Baseband Serial Ports. If the first samples from RX digital filter desire to be discarded, the corresponding RX enable window must cover the corresponding RX dump window. Note that RX dump windows always win over RX enable windows. It means that a RX dump window will always raise a RX enable window. RX enable windows can be raised by TDMA timer or by programming RX power-down bit in global control registers to be '0'. This is useful in debugging environment.

Similarly, a TX dump window refers to the interval that Baseband Serial Ports sinks data from DSP on uplink path and a TX enable window refers to the interval that TX mixed-signal module is powered on. A TX window controlled by TDMA timer involves a TX dump window and a TX enable window simultaneously. The interval between the moment that TX mixed-signal module is powered on and the moment that data proceed to be forwarded from DSP to GMSK or 8PSK modulator by Baseband Serial Ports can be well controlled in TDMA timer. TX dump windows always win over TX enable windows. It means that a TX dump window will always raise a TX enable window. TX enable windows can be raised by TDMA timer or by programming TX power-down bit in global control registers to be '0'. It is useful in debugging environment.

Accordingly, Baseband Serial Ports are only under the control of TX/RX dump window. Note that if TX/RX dump window is not integer multiplies of bit-time it will be extended to be integer multiplies of bit-time. For example, if TX/RX dump window has interval of 156.25 bit-times then it will be extended to 157 bit-times in Baseband Serial Ports.

For uplink path, if uplink path is enabled, then the bit BULEN (Baseband Up-Link Enable) will be '1'. Otherwise the bit BULEN will be 0.

For downlink path, if BDLEN (Baseband DownLink Enable) is enabled, RX mixed-signal module will also be powered on. Similarly, once uplink path is enabled, TX mixed-signal module will also be powered on. Furthermore, enabling BDLFS (Baseband Down-Link FrameSync) Baseband Serial Ports for downlink path refers to dumping results from RX digital FIR filter to DSP.

IWIT 勝發機密不得洩漏 MTK CONFIDENTIAL NO DISCLOSURE IWIT

9.1.2 Register Definitions

BFE+0000h Base-band Common Control Register BFE_CON

Bit	15	14	13	12	11	10	9	8	7	6	5	4	3	2	1	0
Name																BCIEN
Type																R/W
Reset																0

This register is for common control of Baseband Front End. It consists of ciphering encryption control.

BCIEN The bit is for ciphering encryption control. If the bit is set to '1', XOR will be performed on some TX bits (payload of Normal Burst) and ciphering pattern bit from DSP, and then the result is forwarded to GMSK Modulator only. Meanwhile, Baseband Front End will generate signals to drive DSP ciphering process and produce corresponding ciphering pattern bits if the bit is set to '1'. If the bit is set to '0', the TX bit from DSP will be forwarded to GMSK modulator directly. Baseband Front End will not activate DSP ciphering process.

- **0** Disable ciphering encryption.
- **1** Enable ciphering encryption.

MTK Confidential A (機密)

BFE +0004h Base-band Common Status Register BFE_STA

Bit	15	14	13	12	11	10	9	8	7	6	5	4	3	2	1	0
Name							BULEN4	BULEN3	BULEN2	BULEN1	BULFS4	BULFS3	BULFS2	BULFS1	BDLFS	BDLEN
Type							RO	RO	RO	RO	RO	RO	RO	RO	RO	RO
Reset							0	0	0	0	0	0	0	0	0	0

This register indicates status of Baseband Front End. Under control of TDMA timer, Baseband Front End can be driven in several statuses. If downlink path is enabled, then the bit BDLEN will be '1'. Otherwise the bit BDLEN will be '0'. If downlink parts of Baseband Serial Ports is enabled, the bit BDLFS will be '1'. Otherwise the bit BDLFS will be '0'. If uplink path is enabled, then the bit BULEN will be '1'. Otherwise the bit BULEN will be 0. If uplink parts of Baseband Serial Ports is enabled, the bit BULFS will be '1'. Otherwise the bit BULFS will be '0'. Once downlink path is enabled, RX mixed-signal module will also be powered on. Similarly, once uplink path is enabled, TX mixed-signal module will also be powered on. Furthermore, enabling Baseband Serial Ports for downlink path refers to dumping results from RX digital FIR filter to DSP. Similarly, enabling Baseband Serial Ports for uplink path refers to forwarding TX bit from DSP to GMSK modulator. BDLEN stands for "**B**aseband **D**own**L**ink **EN**able". BULEN stands for "**B**aseband **U**p**L**ink **EN**able". BDLFS stands for "**B**aseband **D**own**L**ink **F**rame**S**ync". BULFS stands for "**B**aseband **U**pLink **F**rame**S**ync".

BDLEN Indicate if downlink path is enabled.

- **0** Disabled
- **1** Enabled

BDLFS Indicate if Baseband Serial Ports for downlink path is enabled.

- **0** Disabled
- **1** Enabled

BULFS1 Indicate if Baseband Serial Ports for uplink path is enabled in 1st burst

- **0** Disabled
- **1** Enabled

BULFS2 Indicate if Baseband Serial Ports for uplink path is enabled in 2nd burst

- **0** Disabled
- **1** Enabled

BULFS3 Indicate if Baseband Serial Ports for uplink path is enabled in 3rd burst

- **0** Disabled
- **1** Enabled

BULFS4 Indicate if Baseband Serial Ports for uplink path is enabled in 4th burst

- **0** Disabled
- **1** Enabled

BULEN1 Indicate if uplink path is enabled in 1st burst.

- **0** Disabled
- **1** Enabled

BULEN2 Indicate if uplink path is enabled in 2nd burst.

- **0** Disabled
- **1** Enabled

BULEN3 Indicate if uplink path is enabled in 3rd burst.

- **0** Disabled
- **1** Enabled

IWIT
聯發機密不得洩漏
MTK CONFIDENTIAL
NO DISCLOSURE
IWIT

BULEN4 Indicate if uplink path is enabled in 4th burst.

- **0** Disabled
- **1** Enabled

9.2 Downlink Path (RX Path)

9.2.1 General Description

On the downlink path, the sub-block between RX mixed-signal module and Baseband Serial Ports is RX Path. It mainly consists of two parallel digital FIR filter with programmable tap number, two sets of multiplexing paths for loopback modes, interface for RX mixed-signal module, Interference Detection Circuit, I/Q Gain Mismatch compensation circuit, and interface for Baseband Serial Ports. The block diagram is shown in 錯誤! 找不到參照來源。.

While RX enable windows are open, RX Path will issue control signals to have RX mixed-signal module proceed to make A/D conversion. As each conversion is finished, one set of I/Q signals will be latched. There exists a digital FIR filter for these I/Q signals. The result of filtering will be dumped to Baseband Serial Ports whenever RX dump windows are opened.

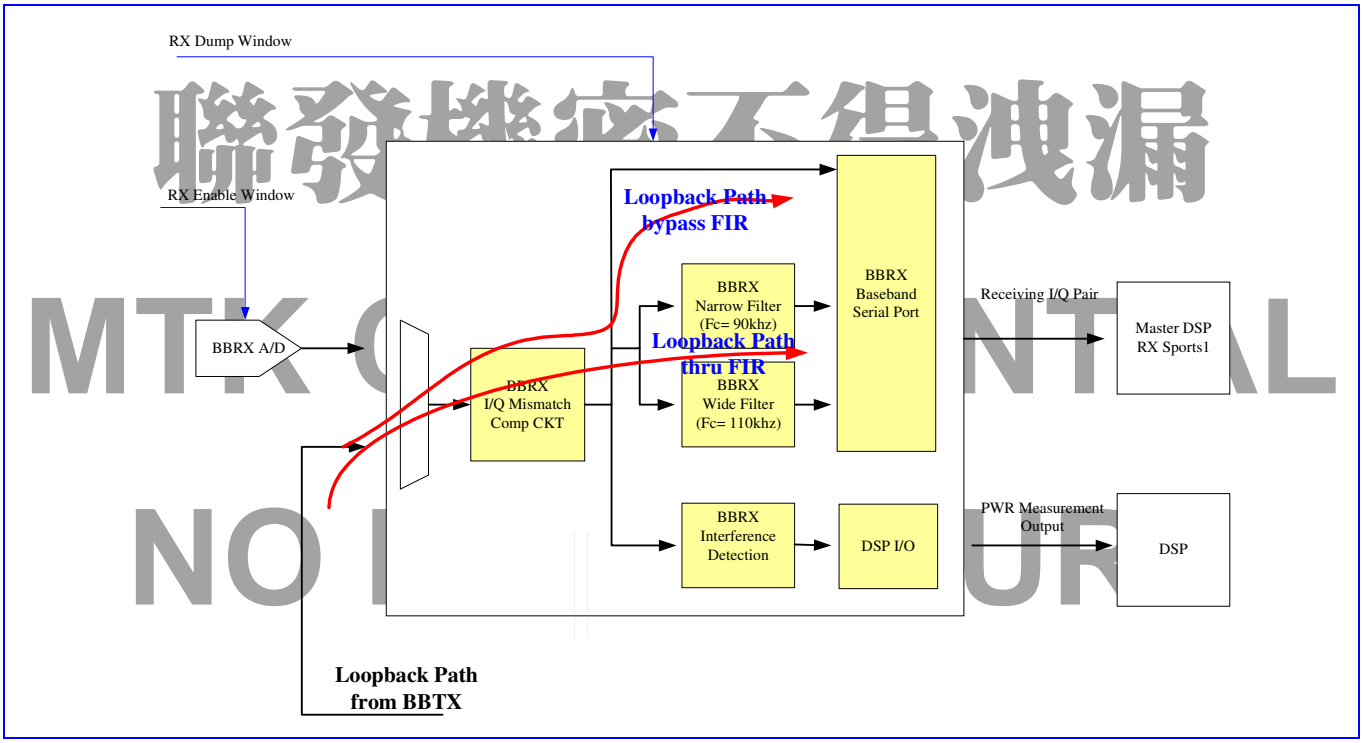

Figure 88 Block Diagram of RX Path

9.2.2 Comb Filter

The comb filter which takes the 2-bit A/D converter as input, and output the 18-bit I/Q data words to the baseband receiving path. The system is designed as 48X over-sampling with symbol period 541.7 kHz, thus the data inputs are 26MHz 2-bit signal. The input 2-bit signals are formed in (sign, magnitude) manner; that is, total 3 values are permitted as input: (-1, 0, +1).

MTK Confidential A (機密)

The data path is mainly a decimation filter which contains the integration stages and the decimation stages. For a 3rd order design with 48X over-sampling, gain of the data path is 48^3 = 110592, which locates between 2^{16} and 2^{17}. Thus the internal word-length must be set to 18-bit to avoid overflow in the integration process.

9.2.3 Compensation Circuit - I/Q Gain Mismatch

In order to compensate I/Q Gain Mismatch , configure IGAINSEL(I Gain Selection) in RX_CON control register, the I over Q ratio can be compensate for 0.3 dB/step, totally 11 steps resulted in dynamic range up to +/-1.5dB.

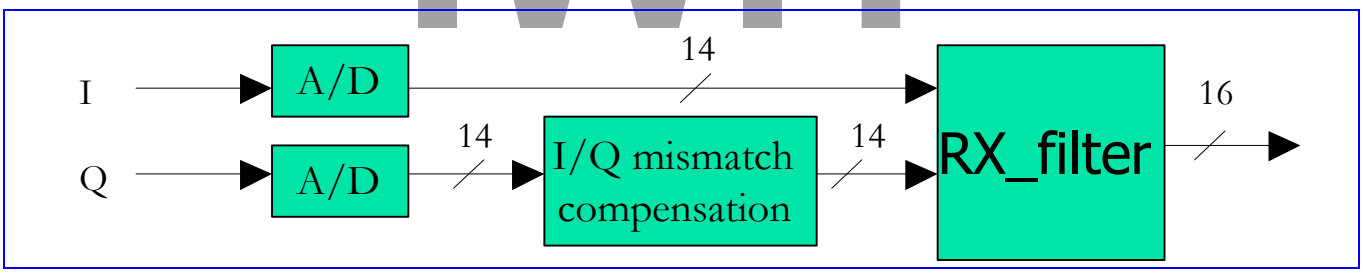

Figure 89 I/Q Mismatch Compensation Block Diagram

The I/Q swap functionality can be setting "1" for SWAP(I/Q Swapping) in RX_CFG control register, which is used to swap I/Q channel signals from RX mixed-signal module before they are latched into RX digital FIR filter. It is intended to provide flexibility for I/Q connection with RF modules

聯發機密不得洩漏

9.2.4 Phase De-rotation Circuit

Phase De-rotation Mode will usually turn on during FCB Detection for down conversion the wide spread receiving power to 67.7 kHz single tone.

MTK CONFIDENTIAL

Two separate control for implement this mode on data path through NarrowFIR filter or WideFIR filter by setting '1' to PHROEN_N (Phase Rotate Enable for NarrowFIR) or PHROEN_W(Phase Rotate Enable for WideFIR) in RX_CON control register, respectively.

NO DISCLOSURE

9.2.5 Adaptive Bandwidth & Programmable Digital FIR Filter

For the two parallel digital FIR Filter, the total tap number is programmable by FIRTPNO(FIR Tap number) in RX_CFG control register, which will configure the filter with different tap buffer depth.

9.2.5.1 Programmable tap & programmable Coefficient for FIR

In order to satisfy the signal requirements in both of idle and traffic modes, two sets of coefficients must be provided for the RX digital FIR filter. Therefore, the RX digital FIR filter is implemented as a FIR filter with programmable coefficients which can be accessed on the APB bus. The coefficient number can be programmable, range from 1~31. Each coefficient is ten-bit wide and coded in 2's complement.

Take 21 Tap Coefficient for example, based on assumption that the FIR filter has symmetric coefficients, only 11 coefficients are implemented as programmable registers to save gate count. Denoting these digital filter coefficients as RX_RAM0_CS0 ~ RX_RAM0_CS11(RX_RAM0 Coefficient Set 0~11), and these tap registers for I/Q channel signals as I/QTAPR [0:20], then the RX digital FIR filtering can be represented as the following equation:

MTK Confidential A (機密)

$$I_{out}(m) = \sum_{i=0}^{20} BDLDFCR[i] * ITAPR[i] \Big|_{\text{at time n+4m}} = BDLDFCR[11] * ITAPR[11] + \sum_{i=0}^{11} BDLDFCR[i] * (ITAPR[i] + ITAPR[20-i]) \Big|$$

$$Q_{out}(m) = \sum_{i=0}^{20} BDLDFCR[i] * QTAPR[i] \Big|_{\text{at time n+4m}} = BDLDFCR[11] * QTAPR[11] + \sum_{i=0}^{11} BDLDFCR[i] * (QTAPR[i] + QTAPR[20-i]) \Big|$$

$$BDLDFCR[i] = BDLDFCR[20-i], i = 0,1,\ldots,11$$

where ITAPR [0] and QTAPR [0] are the latest samples for I- and Q-channel respectively and assume $I_{out}(0), Q_{out}(0)$ are obtained based on the content of tap registers at time moment *n*. From the equation above it follows that the digital RX FIR filter will produce one output every four data conversions out of A/D converters. That is, filtering and decimation are performed simultaneously to achieve low power design.

However, different "Coefficient Set ID"(CS ID) will be dump to Slave DSP RX buffer to represent the current selecting of coefficient Set from either 2 ROM table or 2 set of programmable RAM table according to different burst mode, while ROM table are fixed coefficient and RAM table can be programmed through 2set of 16 control register (RX_RAM0_CS0~ RX_RAM_CS15, (RX_RAM1_CS0~RX_RAM1_CS15). Generally, CSID = 0 represent ROM table selection, while CSID 2~ CSID 15 represent RAM table selection. Please be noted that the total coefficient number in a RAM table should be greater than half of the FIRTPNO (total FIR Tap number) and smaller than half of maximum tap number (15) since the FIR function in symmetric behavior.

Additionally, the data sequence of two parallel FIR filter output will dump to Master DSP RX buffer in following order : "I channel output from Narrow FIR"=> " I channel output from Wide FIR""=>"Q channel output from Narrow FIR=>" Q channel output from Wide FIR.

聯發機密不得洩漏

9.2.5.1.1 Coefficient Set Selection

The Coefficient Set used for digital FIR can be changed during different burst mode switching. For example, during Normal Burst while no FB_STROBE (Frequency Burst Strobe, comes from TDMA controller) assertion, defined as "State B", "Coefficient Set ID" (CSID) selection for both Narrow/Wide filter can be configured by ST_B_WCOF_SEL (State B Wide FIR Coefficient Selection) and "ST_B_NCOF_SEL" (State B Narrow FIR Coefficient Selection) on RX_FIR_CSID_CON control register, respectively. Usually during State B, Layer 1 software will select RAM table coefficient from either RAM0 or RAM1 table in condition I for Narrow FIR and Wide FIR, respectively. The CS ID for both Narrow / Wide FIR filter be stored at Slave DSP RX buffer once TDMA trigger RX interrupt to DSP..ST_A_NCOF_SEL" (State A Narrow FIR Coefficient Selection) on RX_FIR_CSID_CON control register.

MTK CONFIDENTIAL
NO DISCLOSURE

During FCB detection, MCU will notice TDMA controller by assertion FB_STROBE, defined as "StateA". "Coefficient Set ID" (CS ID) selection for both Narrow/Wide filter can be configured by ST_A_WCOF_SEL(State A Wide FIR Coefficient Selection) and "ST_A_NCOF_SEL" (State A Narrow FIR Coefficient Selection) on RX_FIR_CSID_CON control register, respectively. Usually during State B, Layer 1 software will select CS ID 2 and CSID 3 from either ROM0 or ROM1 table or RAM0 or RAM1 table in Condition II for Narrow FIR and Wide FIR, respectively.

9.2.5.2 Interference Detection Circuit for Adaptive Bandwidth Scheme

Used to compare the power of Co-channel Interference and Adjacent-channel Interference for determine if WideFIR filter is needed rather than default NarrowFIR filter. Two parallel path of power measurement for evaluating Co-channel effect or Adjacent Channel Effect by analyzing power after High Pass Filter (HPF) or Band Pass Filter (BPF), respectively. If Co-channel effect is worse than Adjacent Channel effect, WideFIR filter is needed.

MTK Confidential A (機密)

The power measurement is accumulate I/Q Root Mean Square (RMS) power over the whole RX burst window, while exact accumulation period within the burst can be adjusted the starting point offset and duration length.. The "starting point Offset" and be configured by "RXID_PWR_OFF[7:0]" (RX Interference Detection Power Starting Point Offset) and duration period by " RXID_PWR_PER[7:0]"(RX Interference Detection Power Duration Period) in RX_PM_CON control register, while default value for starting offset is 11 and duration period is 141. The two accumulated power measurement output for Co-channel and Adjacent-channel will be dump to Slave DSP RX buffer alternatively at the end of the duration period within a burst. However, if the duration period is longer than the RX Dump Window, the accumulated measurement output will be dump out at falling edge of RX_DUMP_Window rather than the end of configured duration period.

Additionally, the power measurement data sequence at Slave DSP RX buffer will be "Coefficient Set ID for NarrowFIR filter"=> "Coefficient Set ID for WideFIR filter"=>"Power output of HPF(Co-channel)=>"Power output of BPF(Adjacent-channel), while the coefficient Set ID (CSID) is for DSP debug purpose.

The power result can be further scale down by control the PWR_SHFT_NO (power right Shift Number) in RX_CON control register. E.g. set to "1" will divide the power output by two.

9.2.5.3 Supporting Single Filter 2X symbol rate Mode

The two parallel FIR filter default output data rate in 1x Symbol rate after 2X decimation. but by programming 2XFIRSEL(2x Symbol Rate FIR Selection) in RX_CFG control register, WideFIR filter will be disable, while NarrowFIR filter will output data rate in 2X symbol rate without 2x decimation.

聯發機密不得洩漏

9.2.6 Debug Mode

9.2.6.1 Normal Mode bypass Filter

By setting "1" for BYPFLTR(Bypass Filter) in RX_CFG control register, the ADC outputs out of RX mixed-signal module will be directed into Baseband Serial Ports directly without through FIR. Limited by bandwidth of the serial interface between Baseband Serial Ports and DSP, only ADC outputs which are from either I-channel or Q-channel ADC can be dumped into DSP. Both I- and Q-channel ADC outputs cannot be dumped simultaneously. Which channel will be dumped is controlled by the register bit SWAP of the control register RX_CFG when downlink path is programmed in "Bypass RX digital FIR filter" mode. See register definition below for more details. The mode is for measurement of performance of A/D converters in RX mixed-signal module.

MTK CONFIDENTIAL
NO DISCLOSURE

9.2.6.2 TX-RX Digital Loopback Mode (Debug Mode)

In addition to normal function, there are two loopback modes in RX Path. One is bypass-filter loopback mode, and the other is through-filter loopback mode. They are intended for verification of DSP firmware and hardware. The bypass-filter loopback mode refers to that RX digital FIR filter is not on the loopback path. However, the through-filter loopback mode refers to that RX digital FIR filter is on the loopback path, while " thru-Filter Loopback Mode" can be configured by setting "2'b10" for BLPEN(Baseband Loopback Enable) or "bypass-Filter Loopback Mode" by setting " 2'b01" for BLPEN in RX_CON control register.

9.2.7 Register Definitions

BFE +0010h RX Configuration Register **RX_CFG**

Bit	15	14	13	12	11	10	9	8	7	6	5	4	3	2	1	0

MTK Confidential A (機密)

Name						FIRTPNO		2X FIRSEL	BYPFLTR	SWAP
Type						R/W		R/W	R/W	R/W
Reset						000000		0	0	0

This register is for configuration of downlink path, inclusive of configuration of RX mixed-signal module and RX path in Baseband Front End.

SWAP This register bit is for control of whether I/Q channel signals need to swap before they are inputted to Baseband Front End. It provides flexibility flexible of connection of I/Q channel signals between RF module and baseband module. The register bit has another purpose when the register bit "BYPFLTR" is set to 1. Please see description for the register bit "BYPFLTR".

- **0** I- and Q-channel signals are not swapped
- **1** I- and Q-channel signals are swapped

BYPFLTR Bypass RX FIR Filter control. The register bit is used to configure Baseband Front End in the state called "Bypass RX FIR filter state" or not. Once the bit is set to '1', RX FIR filter will be bypassed. That is, ADC outputs of RX mixed-signal module that are has 11-bit resolution and at sampling rate of 1.083MHz can be dumped into DSP by Baseband Serial Ports and RX FIR filtering will not be performed on them. Limited by bandwidth of the serial interface between Baseband Serial Ports and DSP, these ADC outputs are all from either I-channel or Q-channel ADC. Both of I- and Q-channel ADC outputs cannot be dumped simultaneously. When the bit is set to '1' and the register bit "SWAP" is set to '0', ADC outputs of I-channel will be dumped. When the bit is set to '1' and the register bit "SWAP" is set to '1', ADC outputs of Q-channel will be dumped.

- **0** Not bypass RX FIR filter
- **1** Bypass RX FIR filter

2XFIRSEL Enable for single FIR w/ output data rate in 2x Symbol rate output Enable. This mode will disable WideFIR, while Narrow FIR w/ 2x symbol rate without 2x decimation.

- **0** Disable Single FIR 2X symbol rate output mode.
- **1** Enable Single FIR 2X Symbol rate output mode

FIRTPNO RX FIR filter tap no. select. This control register will control the two parallel digital filter with different tap buffer depth since the FIR function in symmetric behavior. The maximum tap number is 31, minimum is 1., ODD number only.

IWIT
聯發機密不得洩漏
MTK CONFIDENTIAL
NO DISCLOSURE

BFE+0014h RX Control Register RX_CON

Bit	15	14	13	12	11	10	9	8	7	6	5	4	3	2	1	0
Name					PWR_SHFT_NO				IGAINSEL				PH_ROEN_N	PH_ROEN_W	BLPEN	
Type					R/W				R/W				R/W	R/W	R/W	
Reset					0000				0000				0	0	00	

This register is for control of downlink path, inclusive of control of RX mixed-signal module and RX path in Baseband Front End module.

BLPEN The register field is for loopback configuration selection in Baseband Front End.

- **00** Configure Baseband Front End in normal function mode
- **01** Configure Baseband Front End in bypass-filter loopback mode
- **10** Configure Baseband Front End in through-filter loopback mode

IWIT

MTK Confidential A (機密)

11 Reserved

PH_ROEN_W Enable for I/Q pair Phase De-rotation in Wide FIR Data Path,

0 Disable Phase De-rotation for I/Q pair.

1 Enable Phase De-rotation for I/Q pair.

PH_ROEN_N Enable for I/Q pair Phase De-rotation in Narrow FIR Data Path,

0 Disable Phase De-rotation for I/Q pair.

1 Enable Phase De-rotation for I/Q pair.

IGAINSEL RX I data Gain Compensation Select. 0.3dB/step, totally 11 steps and dynamic range up to +/-1.5dB for

0000 compensate 0dB for I/Q

0001 compensate 0.3dB for I/Q

0010 compensate 0.6dB for I/Q

0011 compensate 0.9dB for I/Q

0100 compensate 1.2dB for I/Q

0101 compensate 1.5dB for I/Q

1001 compensate –0.3dB for I/Q

1010 compensate -0.6dB for I/Q

1011 compensate –0.9dB for I/Q

1100 compensate –1.2dB for I/Q

1101 compensate –1.5dB for I/Q

Default No compensation for I/Q

PWR_SHFT_NO Power measuring Result Right Shift Number. The Power level measurement result can be right shift from 0 to 16 bits.

聯發機密不得洩漏

BFE+0018h RX Interference Detection Power Measurement Control Register RX_PWR_CON

MTK CONFIDENTIAL

Bit	15	14	13	12	11	10	9	8	7	6	5	4	3	2	1	0
Name	RXID_PWR_PER								RXID_PWR_OFF							
Type	R/W								R/W							
Reset	8D								B							

RXID_PWR_OFF RX Interference Detection Power Measurement Starting Offset. Setting this register will delay the starting time of Interference Detection Power Measurement in symbol time unit. Maximum value is 156, while default value is 11 (0xB).

NO DISCLOSURE

RXID_PWR_PER RX Interference Detection Power Measurement Accumulation Period. By setting this control register will determine the length of accumulation duration for power Measurement. Minimum value is 0, Maximum value is 156, while default value is 141(0x8D). Please notice that RXID_PWR_OFF + RXID_PWR_PER should less than 155 due to hardware implementation limitation.

BFE+001Ch RX FIR Coefficient Set ID Control Register RX_CSSEEL_CON

Bit	15	14	13	12	11	10	9	8	7	6	5	4	3	2	1	0
Name	RX_CSSEL_N_A								RX_CSSEL_N_B				RX_CSSEL_W_B			
Type	R/W								R/W				R/W			
Reset	0000								0010				0011			

These three set of Coefficient Set ID will be dump to slave DSP RX Buffer for indicating the current selection of FIR coefficient from either RAM or ROM table, while CSID= 0 represents ROM table selection, and CSID2~CSID15 represent RAM table selection.

MTK Confidential A (機密)

RX_CSSEL_W_B State B Coefficient Set Selection for WideFIR
RX_CSSEL_N_B State B Coefficient Set Selection for Narrow FIR
RX_CSSEL_N_A State A Coefficient Set Selection for Narrow FIR

BFE +0070h RX RAM0Coefficient Set 0Register RX_FIR_COEF_N0

Bit	15	14	13	12	11	10	9	8	7	6	5	4	3	2	1	0
Name											BDLDFC0R_N					
Type											R/W					
Reset											000000000					

This register is 1st of the 16 coefficient in RAM0 table, Coefficient Set ID 2 or 4. The content is coded in 2's complement. That is, its maximum is 255 and its minimum is –256, while the total coefficient number in this Coefficient Set has to be greater than half of TAPNO(programmable Tap no.) and smaller than half of maximum tap no(15).

Register Address	Register Function	Acronym
BFE +0070h	RX RAM0Coefficient Set 0 Register	RX_FIR_COEF_N0
BFE +0074h	RX RAM0Coefficient Set 1 Register	RX_FIR_COEF_N1
BFE +0078h	RX RAM0Coefficient Set 2 Register	RX_FIR_COEF_N2
BFE +007Ch	RX RAM0Coefficient Set 3 Register	RX_FIR_COEF_N3
BFE +0080h	RX RAM0Coefficient Set 4 Register	RX_FIR_COEF_N4
BFE +0084h	RX RAM0Coefficient Set 5 Register	RX_FIR_COEF_N5
BFE +0088h	RX RAM0Coefficient Set 6 Register	RX_FIR_COEF_N6
BFE +008Ch	RX RAM0Coefficient Set 7 Register	RX_FIR_COEF_N7
BFE +0090h	RX RAM0Coefficient Set 8 Register	RX_FIR_COEF_N8
BFE +0094h	RX RAM0Coefficient Set 9 Register	RX_FIR_COEF_N9
BFE +0098h	RX RAM0Coefficient Set 10 Register	RX_FIR_COEF_N10
BFE +009Ch	RX RAM0Coefficient Set 11Register	RX_FIR_COEF_N11
BFE +00a0h	RX RAM0Coefficient Set 12Register	RX_FIR_COEF_N12
BFE +00a4h	RX RAM0Coefficient Set 13Register	RX_FIR_COEF_N13
BFE +00a8h	RX RAM0Coefficient Set 14 Register	RX_FIR_COEF_N14
BFE +00aCh	RX RAM0Coefficient Set 15 Register	RX_FIR_COEF_N15

BFE +0020h RX RAM1 Coefficient Set 0 Register RX_FIR_COEF_W0

Bit	15	14	13	12	11	10	9	8	7	6	5	4	3	2	1	0
Name							BDLDFC0R_W									
Type							R/W									
Reset							000000000									

This register is 1st of the 16 coefficient in RAM1 table, Coefficient Set ID 2 or 4. The content is coded in 2's complement. That is, its maximum is 255 and its minimum is –256, while the total coefficient number in this Coefficient Set has to be greater than half of TAPNO(programmable Tap no.) and smaller than half of maximum tap no(15).

Register Address	Register Function	Acronym
BFE +0020h	RX RAM1 Coefficient Set 0 Register	RX_FIR_COEF_W0
BFE +0024h	RX RAM1 Coefficient Set 1Register	RX_FIR_COEF_W1
BFE +0028h	RX RAM1 Coefficient Set 2 Register	RX_FIR_COEF_W2

MTK NO DISCLOSURE

MTK Confidential A (機密)

BFE +002Ch	RX RAM1 Coefficient Set 3 Register	RX_FIR_COEF_W3
BFE +0030h	RX RAM1 Coefficient Set 4 Register	RX_FIR_COEF_W4
BFE +0034h	RX RAM1 Coefficient Set 5 Register	RX_FIR_COEF_W5
BFE +0038h	RX RAM1 Coefficient Set 6 Register	RX_FIR_COEF_W6
BFE +003Ch	RX RAM1 Coefficient Set 7 Register	RX_FIR_COEF_W7
BFE +0040h	RX RAM1 Coefficient Set 8 Register	RX_FIR_COEF_W8
BFE +0044h	RX RAM1 Coefficient Set 9 Register	RX_FIR_COEF_W9
BFE +0048h	RX RAM1 Coefficient Set 10 Register	RX_FIR_COEF_W10
BFE +004Ch	RX RAM1 Coefficient Set 11 Register	RX_FIR_COEF_W11
BFE +0050h	RX RAM1 Coefficient Set 12 Register	RX_FIR_COEF_W12
BFE +0054h	RX RAM1 Coefficient Set 13 Register	RX_FIR_COEF_W13
BFE +0058h	RX RAM1 Coefficient Set 14 Register	RX_FIR_COEF_W14
BFE +005Ch	RX RAM1 Coefficient Set 15 Register	RX_FIR_COEF_W15

BFE+00B0h RX Interference Detection HPF Power Register RX_HPWR_STS

Bit	15	14	13	12	11	10	9	8	7	6	5	4	3	2	1	0
Name	RX_PWR_HPF															
Type	R/O															
Reset	0000000000000000															

聯發科技股份有限公司

This register is for read the power measurement result of the HPF interference detection filter.

RX_PWR_HPF Value of the power measurement result for the outband interference detection.

BFE+00B4h RX Interference Detection BPF Power Register RX_BPWR_STS

MTK CONFIDENTIAL

Bit	15	14	13	12	11	10	9	8	7	6	5	4	3	2	1	0
Name	RX_PWR_BPF															
Type	R/O															
Reset	0000000000000000															

This register is for read the power measurement result of the BPF interference detection filter.

RX_PWR_BPF Value of the power measurement result for the inband interference detection.

NO DISCLOSURE

BFE+0743h RX HPF ITD Power Register of Window0 DSPIO_ITD_H_0

Bit	15	14	13	12	11	10	9	8	7	6	5	4	3	2	1	0
Name	ITD_H_DATA_0															
Type	R/O															
Reset	0000000000000000															

This register is for **DSP** to read the power measurement result of the BPF interference detection filter through DSP I/O.

DSPIO_ITD_H_0 Value of the power measurement result for the inband interference detection of window0.

Register Address	Register Function	Acronym
BFE +0743h	RX HPF ITD Power Register of Window0	DSPIO_ITD_H_0
BFE +0747h	RX HPF ITD Power Register of Window1	DSPIO_ITD_H_1
BFE +074Bh	RX HPF ITD Power Register of Window2	DSPIO_ITD_H_2
BFE +074Fh	RX HPF ITD Power Register of Window3	DSPIO_ITD_H_3
BFE +0753h	RX HPF ITD Power Register of Window4	DSPIO_ITD_H_4

MTK Confidential A (機密)

BFE +0757h	RX HPF ITD Power Register of Window5	DSPIO_ITD_H_5

BFE+0744h RX BPF ITD Power Register of Window0 DSPIO_ITD_B_0

Bit	15	14	13	12	11	10	9	8	7	6	5	4	3	2	1	0
Name	ITD_B_DATA_0															
Type	R/O															
Reset	0000000000000000															

This register is for **DSP** to read the power measurement result of the BPF interference detection filter through DSP I/O.

DSPIO_ITD_B_0 Value of the power measurement result for the outband interference detection of window0.

Register Address	Register Function	Acronym
BFE +0744h	RX BPF ITD Power Register of Window0	DSPIO_ITD_B_0
BFE +0748h	RX BPF ITD Power Register of Window1	DSPIO_ITD_B_1
BFE +074Ch	RX BPF ITD Power Register of Window2	DSPIO_ITD_B_2
BFE +0750h	RX BPF ITD Power Register of Window3	DSPIO_ITD_B_3
BFE +0754h	RX BPF ITD Power Register of Window4	DSPIO_ITD_B_4
BFE +0758h	RX BPF ITD Power Register of Window5	DSPIO_ITD_B_5

BFE+0759h RX ITD Power Measurement Ready Flag DSPIO_RXID_RDY

Bit	15	14	13	12	11	10	9	8	7	6	5	4	3	2	1	0
Name											RXID_RDY_5	RXID_RDY_4	RXID_RDY_3	RXID_RDY_2	RXID_RDY_1	RXID_RDY_0
Type											R/O	R/O	R/O	R/O	R/O	R/O
Reset											0	0	0	0	0	0

This register is for **DSP** to see whether the RX ITD power register is ready or not through DSP I/O. When the DSPIO_ITD_H_0 and DSPIO_ITD_B_0 are ready, bit 0 is set to 1. Moreover, while DSP read the data of DSPIO_ITD_H_0 and DSPIO_ITD_B_0, bit 0 is reset to 0.

RXID_RDY_0 Ready flag for DSP to read the ITD power measurement result of window0.

RXID_RDY_1 Ready flag for DSP to read the ITD power measurement result of window1.

RXID_RDY_2 Ready flag for DSP to read the ITD power measurement result of window2.

RXID_RDY_3 Ready flag for DSP to read the ITD power measurement result of window3.

RXID_RDY_4 Ready flag for DSP to read the ITD power measurement result of window4.

RXID_RDY_5 Ready flag for DSP to read the ITD power measurement result of window5.

9.3 Uplink Path (TX Path)

9.3.1 General Description

The purpose of the uplink path inside Baseband Front End is to sink TX symbols, from DSP, then perform GMSK modulation on them, then perform offset cancellation on I/Q digital signals, and finally control TX mixed-signal module to make D/A conversion on I/Q signals out of GMSK Modulator with offset cancellation. Accordingly, the uplink path is composed of uplink parts of Baseband Serial Ports, GSM Encryptor, GMSK Modulator and several compensation circuits including I/Q DC offset, I/Q Quadrature Phase Compensation, and I/Q Gain Mismatch. The block diagram of uplink path is shown as followed.

IWIT
MTK CONFIDENTIAL
NO DISCLOSURE
IWIT

MTK Confidential A (機密)

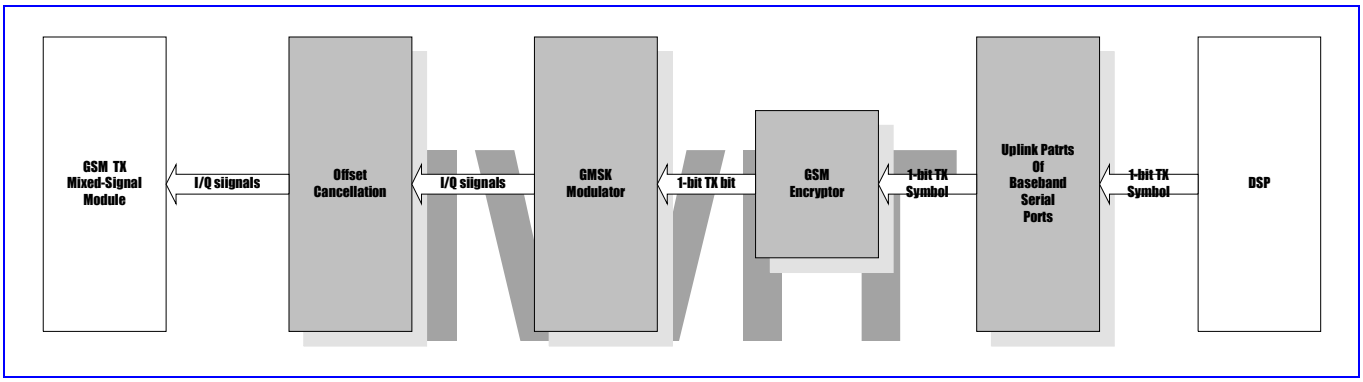

Figure 90 Block Diagram of Uplink Path

On uplink path, the content of a burst, including tail bits, data bits, and training sequence bits is sent from DSP. DSP outputs will be t translated by GMSK Modulator. Where translated bits after modulation will become I/Q digital signals with certain latency.

TDMA timer having a quarter-bit timing accuracy gives the timing windows for uplink operation. Uplink operation is controlled by TX enable window and TX dump window of TDMA timer. Usually, TX enable window is opened earlier than TX dump window. When TX enable window of TDMA timer is opened, uplink path in Baseband Front End will power-on GSK TX mixed-signal module and thus drive valid outputs to RF module. However, uplink parts of Baseband Serial Ports still do not sink data from DSP through the serial interface between Baseband Serial Ports and DSP until TX dump window of TDMA timer is opened.

聯發機密不得洩漏

9.3.2 Compensation Circuit

MTK CONFIDENTIAL

9.3.2.1 DC offset Cancellation

Offset cancellation will be performed on these I/Q digital signals to compensate offset error of D/A converters (DAC) in TX mixed-signal module. Finally the generated I/Q digital signals will be input to TX mixed-signal module that contains two DAC for I/Q signal respectively.

NO DISCLOSURE

9.3.3 Auxiliary Calibration Circuit - 540 kHz Sine Tone Generator

By setting ‘1’ to SGEN(Sine Tone Generation) in TX_CFG control register, the BBTX output will become 540khz single sine tone, which is used for Factory Calibration scheme for Mixed Signal Low Pass Filter Cut-off Frequency Accuracy.

9.3.4 GSM Encryptor

When uplink parts of Baseband Serial Ports pass a TX symbol to GSM Encryptor, GSM Encryptor will perform encryption on the TX symbol if set ‘1’ to BCIEN(Baseband Ciphering Encryption) in 錯誤！找不到參照來源。 register. Otherwise, the TX symbol will be directed to GMSK modulator directly.

IWIT

MTK Confidential A (機密)

9.3.5 Modulation

9.3.5.1 GMSK Modulation

GMSK Modulator is used to convert bit stream of GSM bursts into in-phase and quadrature-phase outputs by means of GMSK modulation scheme. It consists of a ROM table, timing control logic and some state registers for GMSK modulation scheme. GMSK Modulator is activated when TX dump window is opened. There is latency between assertion of TX dump window and the first valid output of GMSK Modulator. The reason is because the bit rate of TX symbols is 270.833 KHz and the output rate of GMSK Modulator is 4.333 MHz, and therefore timing synchronization is necessary between the two rates.

Additionally, in order to prevent phase discontinuity in between the multiple-burst Mode, the GMSK modulator will output continuous 67.7khs sine tone outside the burst once RX DAC Enable window is still asserted. Once RX DAC Enable window is disserted, GMSK modulator will park at DC level.

9.3.5.2 I/Q Swap

By setting '1' to IQSWP in TX_CFG control register, phase on I/Q plane will rotate in inverse direction. This option is to meet the different requirement form RF chip regarding I/Q plane. This control signal is for GMSK Modulation only.

9.3.5.3 Debug Mode

9.3.5.3.1 Modulation Bypass Mode

For DSP debug purpose, set both '1' for MDBYP(Modulator Bypass) in TX_CFG control register and BYPFLR(Bypass RX Filter) in RX_CFG control register for directly loopback DSP 16-bits data (10bits valid data plus sign or zero extension) through DAC only.

9.3.5.3.2 Force GMSK Modulator turn on

By setting '1' to APNDEN(Append Enable) bit in TX CFG control register, GMSK modulator will park on constant DC level during the non-burst period, while the I/Q pair output phase maybe discontinuous since both modulator will be reset at the beginning of the burst. However, the reset of the modulator will be helpful for the debugging purpose.

9.3.6 Register Definitions

BFE +0060h TX Configuration Register TX_CFG

Bit	15	14	13	12	11	10	9	8	7	6	5	4	3	2	1	0
Name									ALL_10_EN		SGEN	MDBYP				APNDEN
Type									RW		R/W	R/W				R/W
Reset									00		0	0				0

This register is for configuration of uplink path, inclusive of configuration of TX mixed-signal module and TX path in Baseband Front End.

APNDEN Appending Bits Enable. (For DSP digital loopback debug mode) The register bit is used to control the ending scheme of GPRS Mode GMSK modulation only.

0 Suitable for GPRS /EDGE mode. If a TX enable window contains several TX dump window, then GMSK modulator will still output in the intervals between two TX dump window and all 1's will be fed into GMSK

聯發機密不得洩漏
MTK CONFIDENTIAL
NO DISCLOSURE
IWIT

MTK Confidential A (機密)

modulator. In the other word, mainly used PA to perform the power ramp up/down, while Modulator output low amplitude sinewave. **Note that when the bit is set to '0', the interval between the moment at which TX enable window is activated and the moment at which TX dump window is activated must be multiples of one bit time.**

1 Suitable for GSM only. After a TX dump window, GMSK modulator will only output for some bit time.

MDBYP Modulator Bypass (For DSP Debug Mode) Select. The register bit is used to select the bypass mode for I/Q pair outputs bypassed both the GMSK/8PSK modulator

0 Regular Modulation Mode

1 Bypass Modulator Mode (DSP Debug Mode).

SGEN SineTone Generator Enable. (For Factory Calibration Purpose). The register bit is used to select the TX modulator output switch to 540 kHz Sine Tone.

0 BBTX output from regulator modulator output.

1 BBTX output switch to 540 kHz sine Tone

ALL_10GEN For Debug mode of BBTX. Generate all 1's or zero's input during BBTX valid burst. For GMSK modulation, set 2'b1 or 2'b10 will generate 67.7 kHz sine tone, while 8PSK modulator will generate 50 kHz sine tone. Default value 2'b00 is normal mode.

0 Normal Mode, regular modulator input from Slave DSP TX Buffer.

1 Debug Mode, All zero's input pattern generated; GMSK modulator will generate 67.7 kHz sine tone.

2 Debug Mode All 1's input pattern generated; GMSK modulator will generate 67.7 kHz sine tone.

聯發機密不得洩漏

BFE +0064h TX Control Register TX_CON

Bit	15	14	13	12	11	10	9	8	7	6	5	4	3	2	1	0
Name						TX_PH_SEL										IQSWP
Type						R/W										R/O
Reset						000										0

MTK CONFIDENTIAL

This register is for control of uplink path, inclusive of control of TX mixed-signal module and TX path in Baseband Front End.

IQSWP The register bit is for only read back the IQWAP control register status from TDMA_EVTENA1[7]

0: I and Q are not swapped.

1: I and Q are swapped.

NO DISCLOSURE

PHSEL Quadrature phase compensation select

000: 0 degree compensation.

001: 1 degree compensation.

010: 2 degree compensation.

011: 3 degree compensation.

100: -3 degree compensation.

101: -2 degree compensation.

110: -1 degree compensation.

111: 0 degree compensation.

BFE +0068h TX I/Q Channel Offset Compensation Register TX_OFF

Bit	15	14	13	12	11	10	9	8	7	6	5	4	3	2	1	0
Name	OFF_TYP		OFFQ[5:0]								OFFI[5:0]					

MTK Confidential A (機密)

Type	R/W		R/W			R/W
Reset	0		000000			000000

The register is for offset cancellation of I-channel DAC in TX mixed-signal module. It is for compensation of offset error caused by I/Q-channel DAC in TX mixed-signal module. It is coded in 2's complement, that is, with maximum 31 and minimum –32.

OFFI Value of offset cancellation for I-channel DAC in TX mixed-signal module

OFFQ Value of offset cancellation for Q-channel DAC in TX mixed-signal module

OFF_TYP Type of the OFFI and OFFQ register. While OFF_TYP = 1, the offset values are double buffered and can be chaneged burst by burst after EVENT_VALIDATE comes. Otherwise, the offset values would change immidately after the coming of APB commands, which can't be adjusted burst by burst.

0 No double buffer

1 Double buffered

IWIT
聯發機密不得洩漏
MTK CONFIDENTIAL
NO DISCLOSURE
IWIT

MTK Confidential A (機密)

10 Timing Generator

Timing is the most critical issue in GSM/GPRS applications. The TDMA timer provides a simple interface for the MCU to program all the timing-related events for receive event control, transmit event control and the timing adjustment. Detailed descriptions are mentioned in Section 10.1.

In pause mode, the 13MHz reference clock may be switched off temporarily for the purpose of power saving and the synchronization to the base-station is maintained by using a low power 32KHz crystal oscillator. The 32KHz oscillator is not accurate and therefore it should be calibrated prior to entering pause mode. The calibration sequence, pause begin sequence and the wake up sequence are described in Section 10.2.

10.1 TDMA timer

The TDMA timer unit is composed of three major blocks: Quarter bit counter, Signal generator and Event registers.

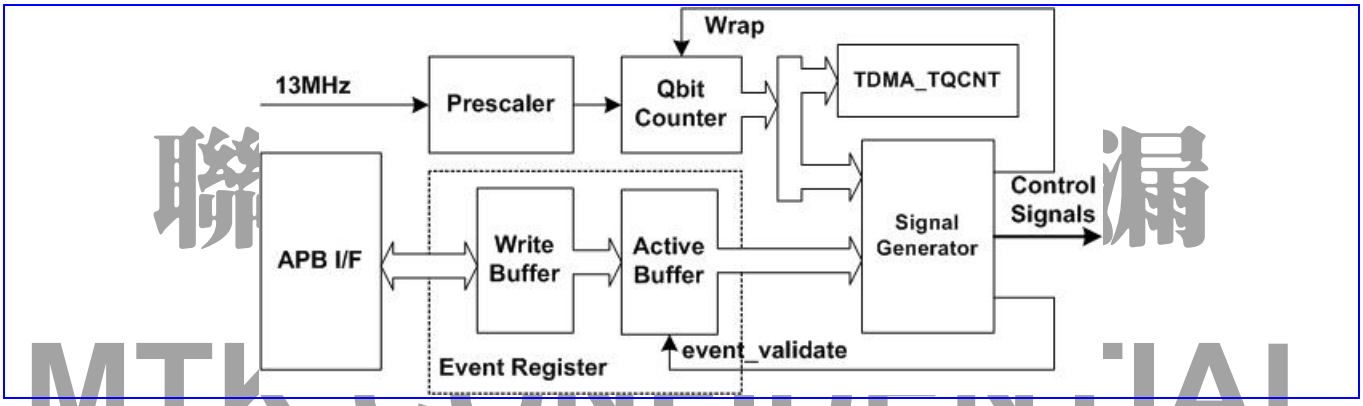

Figure 91 The block diagram of TDMA timer

By default, the quarter-bit counter continuously counts from 0 to the wrap position. In order to apply to cell synchronization and neighboring cell monitoring, the wrap position can be changed by the MCU to shorten or lengthen a TDMA frame. The wrap position is held in the TDMA_WRAP register and the current value of the TDMA quarter bit counter may be read by the MCU via the TDMA_TQCNT register.

The signal generator handles the overall comparing and event-generating processes. When a match has occurred between the quarter bit counter and the event register, a predefined control signal is generated. These control signals may be used for on-chip and off-chip purposes. Signals that change state more than once per frame make use of more than one event register.

The event registers are programmed to contain the quarter bit position of the event that is to occurr. The event registers are double buffered. The MCU writes into the first register, and the event TDMA_EVTVAL transfers the data from the write buffer to the active buffer, which is used by the signal generator for comparison with the quarter bit count. The TDMA_EVTVAL signal itself may be programmed at any quarter bit position. These event registers could be classified into four groups:

On-chip Control Events

TDMA_EVTVAL

聯發科技股份有限公司 MTK CONFIDENTIAL NO DISCLOSURE

MTK Confidential A (機密)

This event allows the data values written by the MCU to pass through to the active buffers.

TDMA_WRAP

TDMA quarter bit counter wrap position. This sets the position at which the TDMA quarter bit counter resets back to zero. The default value is 4999, changing this value will advance or retard the timing events in the frame following the next TDMA_EVTVAL signal.

TDMA_DTIRQ

DSP TDMA interrupt requests. DTIRQ triggers the DSP to read the command from the MCU/DSP Shard RAM to schedule the activities that will be executed in the current frame.

TDMA_CTIRQ1/CTIRQ2

MCU TDMA interrupt requests.

TDMA_AUXADC [1:0]

This signal triggers the monitoring ADC to measure the voltage, current, temperature, device id etc..

TDMA_AFC [3:0]

This signal powers up the automatic frequency control DAC for a programmed duration after this event.

Note: For both MCU and DSP TDMA interrupt requests, these signals are all active Low during one quarter bit duration and they should be used as edge sensitive events by the respective interrupt controllers.

On-chip Receive Events

TDMA_BDLON [5:0]

These registers are a set of six which contain the quarter bit event that initiates the receive window assertion sequence which powers up and enables the receive ADC, and then enables loading of the receive data into the receive buffer.

TDMA_BDLOFF [5:0]

These registers are a set of six which contain the quarter bit event that initiates the receive window de-assertion sequence which disables loading of the receive data into the receive buffer, and then powers down the receive ADC.

TDMA_RXWIN[5:0]

DSP TDMA interrupt requests. TDMA_RXWIN is usually used to initiate the related RX processing including two modes. In single-shot mode, TDMA_RXWIN is generated when the BRXFS signal is de-asserted. In repetitive mode, TDMA_RXWIN will be generated both regularly with a specific interval after BRXFS signal is asserted and when the BRXFS signal is de-asserted.

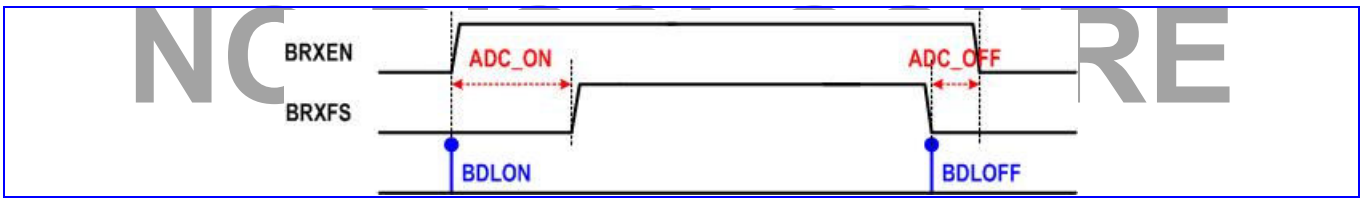

Figure 92 The timing diagram of BRXEN and BRXFS

Note: TDMA_BDLON/OFF event registers, together with TDMA_BDLCON register, generate the corresponding BRXEN and BRXFS window used to power up/down baseband downlink path and control the duration of data transmission to the DSP, respectively.

On-chip Transmit Events

TDMA_APC [6:0]

These registers initiate the loading of the transmit burst shaping values from the transmit burst shaping RAM into the transmit power control DAC.

TDMA_BULON [3:0]

聯發機密不得洩漏
MTK CONFIDENTIAL
NC RE
IWIT
IWIT

MTK Confidential A (機密)

This register contains the quarter bit event that initiates the transmit window assertion sequence which powers up the modulator DAC and then enables reading of bits from the transmit buffer into the GMSK modulator.

TDMA_BULOFF [3:0]

This register contains the quarter bit event that initiates the transmit window de-assertion sequence which disables the reading of bits from the transmit buffer into the GMSK modulator, and then power down the modulator DAC.

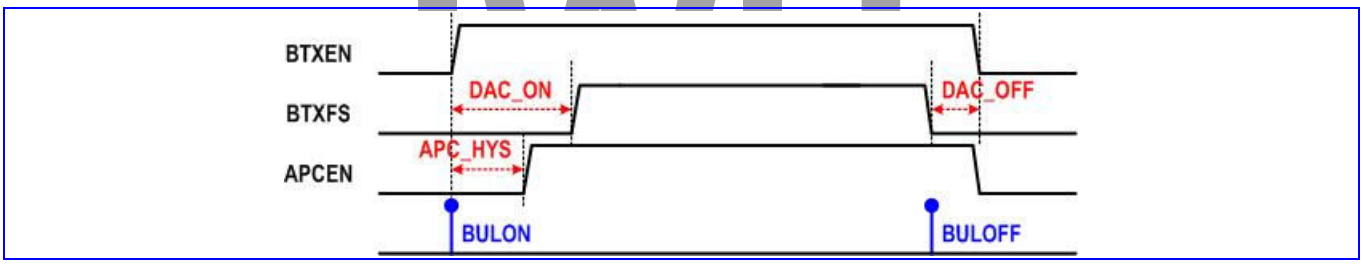

Figure 93 The timing diagram of BTXEN and BTXFS

Note: TDMA_BULON/OFF event registers, together with TDMA_BULCON1, TDMA_BULCON2 register, generate the corresponding BTXEN, BTXFS and APCEN window used to power up/down the baseband uplink path, control the duration of data transmission from the DSP and power up/down the APC DAC, respectively.

Off-chip Control Events

TDMA_BSI [15:0]

The quarter bit positions of these 16 BSI events are used to initiate the transfer of serial words to the transceiver and synthesizer for gain control and frequency adjustment.

TDMA_BPI [25:0]

The quarter bit positions of these 26 BPI events are used to generate changes of state on the output pins to control the external radio components.

MTK CONFIDENTIAL

10.1.1 Register Definitions

TDMA+0150h Event Enable Register 0 — TDMA_EVTENA 0

Bit	15	14	13	12	11	10	9	8	7	6	5	4	3	2	1	0
Name	AFC3	AFC2	AFC1	AFC0	BDL5	BDL4	BDL3	BDL2	BDL1	BDL0				CTIRQ2	CTIRQ1	DTIRQ
Type	R/W	R/W	R/W	R/W	R/W	R/W	R/W	R/W	R/W	R/W				R/W	R/W	R/W
Reset	0	0	0	0	0	0	0	0	0	0				0	0	0

DTIRQ Enable TDMA_DTIRQ

CTIRQ*n* Enable TDMA_CTIRQ*n*

AFC*n* Enable TDMA_AFC*n*

BDL*n* Enable TDMA_BDLON*n* and TDMA_BDLOFF*n*

For all these bits,

- **0** function is disabled
- **1** function is enabled

TDMA+0154h Event Enable Register 1 — TDMA_EVTENA 1

Bit	15	14	13	12	11	10	9	8	7	6	5	4	3	2	1	0

IWIT
NO DISCLOSURE
IWIT

MTK Confidential A (機密)

Name	GPRS				BUL3	BUL2	BUL1	BUL0		APC6	APC5	APC4	APC3	APC2	APC1	APC0
Type	R/W				R/W	R/W	R/W	R/W		R/W	R/W	R/W	R/W	R/W	R/W	R/W
Reset	0				0	0	0	0		0	0	0	0	0	0	0

APC*n* Enable TDMA_APC*n*

BUL*n* Enable TDMA_BULON*n* and TDMA_BULOFF*n*

For all these bits,

0 function is disabled

1 function is enabled

IWIT

TDMA +0158h Event Enable Register 2

TDMA_EVTENA 2

Bit	15	14	13	12	11	10	9	8	7	6	5	4	3	2	1	0
Name	BSI15	BSI14	BSI13	BSI12	BSI11	BSI10	BSI9	BSI8	BSI7	BSI6	BSI5	BSI4	BSI3	BSI2	BSI1	BSI0
Type	R/W	R/W	R/W	R/W	R/W	R/W	R/W	R/W	R/W	R/W	R/W	R/W	R/W	R/W	R/W	R/W
Reset	0	0	0	0	0	0	0	0	0	0	0	0	0	0	0	0

BSI*n* BSI event enable control

0 Disable TDMA_BSI*n*

1 Enable TDMA_BSI*n*

聯發機密不得洩漏

TDMA +015Ch Event Enable Register 3

TDMA_EVTENA 3

Bit	15	14	13	12	11	10	9	8	7	6	5	4	3	2	1	0
Name	BPI15	BPI14	BPI13	BPI12	BPI11	BPI10	BPI9	BPI8	BPI7	BPI6	BPI5	BPI4	BPI3	BPI2	BPI1	BPI0
Type	R/W	R/W	R/W	R/W	R/W	R/W	R/W	R/W	R/W	R/W	R/W	R/W	R/W	R/W	R/W	R/W
Reset	0	0	0	0	0	0	0	0	0	0	0	0	0	0	0	0

MTK CONFIDENTIAL

TDMA+0160h Event Enable Register 4

TDMA_EVTENA 4

Bit	15	14	13	12	11	10	9	8	7	6	5	4	3	2	1	0
Name							BPI25	BPI24	BPI23	BPI22	BPI21	BPI20	BPI19	BPI18	BPI17	BPI16
Type							R/W	R/W	R/W	R/W	R/W	R/W	R/W	R/W	R/W	R/W
Reset							0	0	0	0	0	0	0	0	0	0

NO DISCLOSURE

BPI*n* BPI event enable control

0 Disable TDMA_BPI*n*

1 Enable TDMA_BPI*n*

TDMA+0164h Event Enable Register 5

TDMA_EVTENA 5

Bit	15	14	13	12	11	10	9	8	7	6	5	4	3	2	1	0
Name											DIGRF_TX3	DIGRF_TX2	DIGRF_TX1	DIGRF_TX0	AUX1	AUX0
Type											R/W	R/W	R/W	R/W	R/W	R/W
Reset											0	0	0	0	0	0

AUX Auxiliary ADC event enable control

0 Disable Auxiliary ADC event

IWIT

MTK Confidential A (機密)

1 Enable Auxiliary ADC event

DIGRF_TX Dig RF event enable control

0 Disable Dig RF event

1 Enable Dig RF event

TDMA +0170h Qbit Timer Offset Control Register — TDMA_WRAPOFS

Bit	15	14	13	12	11	10	9	8	7	6	5	4	3	2	1	0
Name															TOI[1:0]	
Type															R/W	
Reset															0	

TOI This register defines the value used to advance the Qbit timer in unit of 1/4 quarter bit; the timing advance will be take place as soon as the TDMA_EVTVAL is occurred, and it will be cleared automatically.

TDMA +0174h Qbit Timer Biasing Control Register — TDMA_REGBIAS

Bit	15	14	13	12	11	10	9	8	7	6	5	4	3	2	1	0
Name			TQ_BIAS[13:0]													
Type			R/W													
Reset			0													

TQ_BIAS This register defines the Qbit offset value which will be added to the registers being programmed. It only takes effects on AFC, BDLON/OFF, BULON/OFF, APC, AUXADC, BSI and BPI event registers.

TDMA +0180h DTX Control Register — TDMA_DTXCON

Bit	15	14	13	12	11	10	9	8	7	6	5	4	3	2	1	0
Name													DTX3	DTX2	DTX1	DTX0
Type													R/W	R/W	R/W	R/W

DTX DTX flag is used to disable the associated transmit signals

0 BULON0, BULOFF0, APC_EV0 & APC_EV1 are controlled by TDMA_EVTENA1 register

1 BULON0, BULOFF0, APC_EV0 & APC_EV1 are disabled

TDMA +0184h Receive Interrupt Control Register — TDMA_RXCON

Bit	15	14	13	12	11	10	9	8	7	6	5	4	3	2	1	0
Name	MOD5	MOD4	MOD3	MOD2	MOD1	MOD0	RXINTCNT[9:0]									
Type	R/W	R/W	R/W	R/W	R/W	R/W	R/W									

RXINTCNT TDMA_RXWIN interrupt generation interval in quarter bit unit

MOD*n* Mode of Receive Interrupts

0 Single shot mode for the corresponding receive window

1 Repetitive mode for the corresponding receive window

TDMA +0188h Baseband Downlink Control Register — TDMA_BDLCON

Bit	15	14	13	12	11	10	9	8	7	6	5	4	3	2	1	0
Name	ADC_ON										ADC_OFF					
Type	R/W										R/W					

ADC_ON BRXEN to BRXFS setup up time in quarter bit unit.

IWIT 聯發機密不得洩漏 MTK CONFIDENTIAL NO DISCLOSURE IWIT

MTK Confidential A (機密)

ADC_OFF BRXEN to BRXFS hold up time in quarter bit unit.

TDMA +018Ch Baseband Uplink Control Register 1

TDMA_BULCON 1

Bit	15	14	13	12	11	10	9	8	7	6	5	4	3	2	1	0
Name	DAC_ON										DAC_OFF					
Type	R/W										R/W					

DAC_ON BTXEN to BTXFS setup up time in quarter bit unit.

DAC_OFF BTXEN to BTXFS hold up time in quarter bit unit.

TDMA +0190h Baseband Uplink Control Register 2

TDMA_BULCON 2

Bit	15	14	13	12	11	10	9	8	7	6	5	4	3	2	1	0
Name									APC_HYS							
Type									R/W							

APC_HYS APCEN to BTXEN hysteresis time in quarter bit unit.

Address	Type	Width	Reset Value	Name	Description
+0000h	R	[13:0]	—	TDMA_TQCNT	Read quarter bit counter
+0004h	R/W	[13:0]	0x1387	TDMA_WRAP	Latched Qbit counter reset position
+0008h	R/W	[13:0]	0x1387	TDMA_WRAPIMD	Direct Qbit counter reset position
+000Ch	R/W	[13:0]	0x0000	TDMA_EVTVAL	Event latch position
+0010h	R/W	[13:0]	—	TDMA_DTIRQ	DSP software control
+0014h	R/W	[13:0]	—	TDMA_CTIRQ1	MCU software control 1
+0018h	R/W	[13:0]	—	TDMA_CTIRQ2	MCU software control 2
+0020h	R/W	[13:0]	—	TDMA_AFC0	The 1st AFC control
+0024h	R/W	[13:0]	—	TDMA_AFC1	The 2nd AFC control
+0028h	R/W	[13:0]	—	TDMA_AFC2	The 3rd AFC control
+002Ch	R/W	[13:0]	—	TDMA_AFC3	The 4th AFC control
+0030h	R/W	[13:0]	—	TDMA_BDLON0	Data serialization of the 1st RX block
+0034h	R/W	[13:0]	—	TDMA_BDLOFF0	
+0038h	R/W	[13:0]	—	TDMA_BDLON1	Data serialization of the 2nd RX block
+003Ch	R/W	[13:0]	—	TDMA_BDLOFF1	
+0040h	R/W	[13:0]	—	TDMA_BDLON2	Data serialization of the 3rd RX block
+0044h	R/W	[13:0]	—	TDMA_BDLOFF2	
+0048h	R/W	[13:0]	—	TDMA_BDLON3	Data serialization of the 4th RX block
+004Ch	R/W	[13:0]	—	TDMA_BDLOFF3	
+0050h	R/W	[13:0]	—	TDMA_BDLON4	Data serialization of the 5th RX block
+0054h	R/W	[13:0]	—	TDMA_BDLOFF4	
+0058h	R/W	[13:0]	—	TDMA_BDLON5	Data serialization of the 6th RX block
+005Ch	R/W	[13:0]	—	TDMA_BDLOFF5	
+0060h	R/W	[13:0]	—	TDMA_BULON0	Data serialization of the 1st TX slot
+0064h	R/W	[13:0]	—	TDMA_BULOFF0	
+0068h	R/W	[13:0]	—	TDMA_BULON1	Data serialization of the 2nd TX slot
+006Ch	R/W	[13:0]	—	TDMA_BULOFF1	
+0070h	R/W	[13:0]	—	TDMA_BULON2	Data serialization of the 3rd TX slot
+0074h	R/W	[13:0]	—	TDMA_BULOFF2	
+0078h	R/W	[13:0]	—	TDMA_BULON3	Data serialization of the 4th TX slot
+007Ch	R/W	[13:0]	—	TDMA_BULOFF3	

IWT
廠發機密不得洩漏
MTK CONFIDENTIAL
IWT

MTK Confidential A (機密)

+0090h	R/W	[13:0]	—	TDMA_APC0	The 1st APC control
+0094h	R/W	[13:0]	—	TDMA_APC1	The 2nd APC control
+0098h	R/W	[13:0]	—	TDMA_APC2	The 3rd APC control
+009Ch	R/W	[13:0]	—	TDMA_APC3	The 4th APC control
+00A0h	R/W	[13:0]	—	TDMA_APC4	The 5th APC control
+00A4h	R/W	[13:0]	—	TDMA_APC5	The 6th APC control
+00A8h	R/W	[13:0]	—	TDMA_APC6	The 7th APC control
+00B0h	R/W	[13:0]	—	TDMA_BSI0	BSI event 0
+00B4h	R/W	[13:0]	—	TDMA_BSI1	BSI event 1
+00B8h	R/W	[13:0]	—	TDMA_BSI2	BSI event 2
+00BCh	R/W	[13:0]	—	TDMA_BSI3	BSI event 3
+00C0h	R/W	[13:0]	—	TDMA_BSI4	BSI event 4
+00C4h	R/W	[13:0]	—	TDMA_BSI5	BSI event 5
+00C8h	R/W	[13:0]	—	TDMA_BSI6	BSI event 6
+00CCh	R/W	[13:0]	—	TDMA_BSI7	BSI event 7
+00D0h	R/W	[13:0]	—	TDMA_BSI8	BSI event 8
+00D4h	R/W	[13:0]	—	TDMA_BSI9	BSI event 9
+00D8h	R/W	[13:0]	—	TDMA_BSI10	BSI event 10
+00DCh	R/W	[13:0]	—	TDMA_BSI11	BSI event 11
+00E0h	R/W	[13:0]	—	TDMA_BSI12	BSI event 12
+00E4h	R/W	[13:0]	—	TDMA_BSI13	BSI event 13
+00E8h	R/W	[13:0]	—	TDMA_BSI14	BSI event 14
+00ECh	R/W	[13:0]	—	TDMA_BSI15	BSI event 15
+0100h	R/W	[13:0]	—	TDMA_BPI0	BPI event 0
+0104h	R/W	[13:0]	—	TDMA_BPI1	BPI event 1
+0108h	R/W	[13:0]	—	TDMA_BPI2	BPI event 2
+010Ch	R/W	[13:0]	—	TDMA_BPI3	BPI event 3
+0110h	R/W	[13:0]	—	TDMA_BPI4	BPI event 4
+0114h	R/W	[13:0]	—	TDMA_BPI5	BPI event 5
+0118h	R/W	[13:0]	—	TDMA_BPI6	BPI event 6
+011Ch	R/W	[13:0]	—	TDMA_BPI7	BPI event 7
+0120h	R/W	[13:0]	—	TDMA_BPI8	BPI event 8
+0124h	R/W	[13:0]	—	TDMA_BPI9	BPI event 9
+0128h	R/W	[13:0]	—	TDMA_BPI10	BPI event 10
+012Ch	R/W	[13:0]	—	TDMA_BPI11	BPI event 11
+0130h	R/W	[13:0]	—	TDMA_BPI12	BPI event 12
+0134h	R/W	[13:0]	—	TDMA_BPI13	BPI event 13
+0138h	R/W	[13:0]	—	TDMA_BPI14	BPI event 14
+013Ch	R/W	[13:0]	—	TDMA_BPI15	BPI event 15
+0140h	R/W	[13:0]	—	TDMA_BPI16	BPI event 16
+0144h	R/W	[13:0]	—	TDMA_BPI17	BPI event 17
+0148h	R/W	[13:0]	—	TDMA_BPI18	BPI event 18
+014Ch	R/W	[13:0]	—	TDMA_BPI19	BPI event 19
+01A0h	R/W	[13:0]	—	TDMA_BPI20	BPI event 20
+01A4h	R/W	[13:0]	—	TDMA_BPI21	BPI event 21
+01A8h	R/W	[13:0]	—	TDMA_BPI22	BPI event 22
+01ACh	R/W	[13:0]	—	TDMA_BPI23	BPI event 23
+01B0h	R/W	[13:0]	—	TDMA_BPI24	BPI event 24
+01B4h	R/W	[13:0]	—	TDMA_BPI25	BPI event 25
+01C0h	R/W	[13:0]	—	TDMA_AUXEV0	Auxiliary ADC event 0

VIP
聯發機密不得洩漏

MTK Confidential A (機密)

+01C4h	R/W	[13:0]	—	TDMA_AUXEV1	Auxiliary ADC event 1
+0240h	R/W	[13:0]		TDMA_DIGRF_TX0_ON	Dig RF TX ON event0
+0244h	R/W	[13:0]		TDMA_DIGRF_TX1_ON	Dig RF TX ON event1
+0248h	R/W	[13:0]		TDMA_DIGRF_TX2_ON	Dig RF TX ON event2
+024Ch	R/W	[13:0]		TDMA_DIGRF_TX3_ON	Dig RF TX ON event3
+0250h	R/W	[13:0]		TDMA_DIGRF_TX0_OFF	Dig RF TX OFF event0
+0254h	R/W	[13:0]		TDMA_DIGRF_TX1_OFF	Dig RF TX OFF event1
+0258h	R/W	[13:0]		TDMA_DIGRF_TX2_OFF	Dig RF TX OFF event2
+025Ch	R/W	[13:0]		TDMA_DIGRF_TX3_OFF	Dig RF TX OFF event3
+0150h	R/W	[15:0]	0x0000	TDMA_EVTENA0	Event Enable Control 0
+0154h	R/W	[15:0]	0x0000	TDMA_EVTENA1	Event Enable Control 1
+0158h	R/W	[15:0]	0x0000	TDMA_EVTENA2	Event Enable Control 2
+015Ch	R/W	[15:0]	0x0000	TDMA_EVTENA3	Event Enable Control 3
+0160h	R/W	[9:0]	0x0000	TDMA_EVTENA4	Event Enable Control 4
+0164h	R/W	[5:0]	0x0000	TDMA_EVTENA5	Event Enable Control 5
+0170h	R/W	[1:0]	0x0000	TDMA_WRAPOFS	TQ Counter Offset Control Register
+0174h	R/W	[13:0]	0x0000	TDMA_REGBIAS	Biasing Control Register
+0180h	R/W	[3:0]	—	TDMA_DTXCON	DTX Control Register
+0184h	R/W	[15:0]	—	TDMA_RXCON	Receive Interrupt Control Register
+0188h	R/W	[15:0]	—	TDMA_BDLCON	Downlink Control Register
+018Ch	R/W	[15:0]	—	TDMA_BULCON1	Uplink Control Register 1
+0190h	R/W	[7:0]	—	TDMA_BULCON2	Uplink Control Register 2

聯發科技股份有限公司

Table 52 TDMA Timer Register Map

10.2 Slow Clocking Unit

MTK CONFIDENTIAL

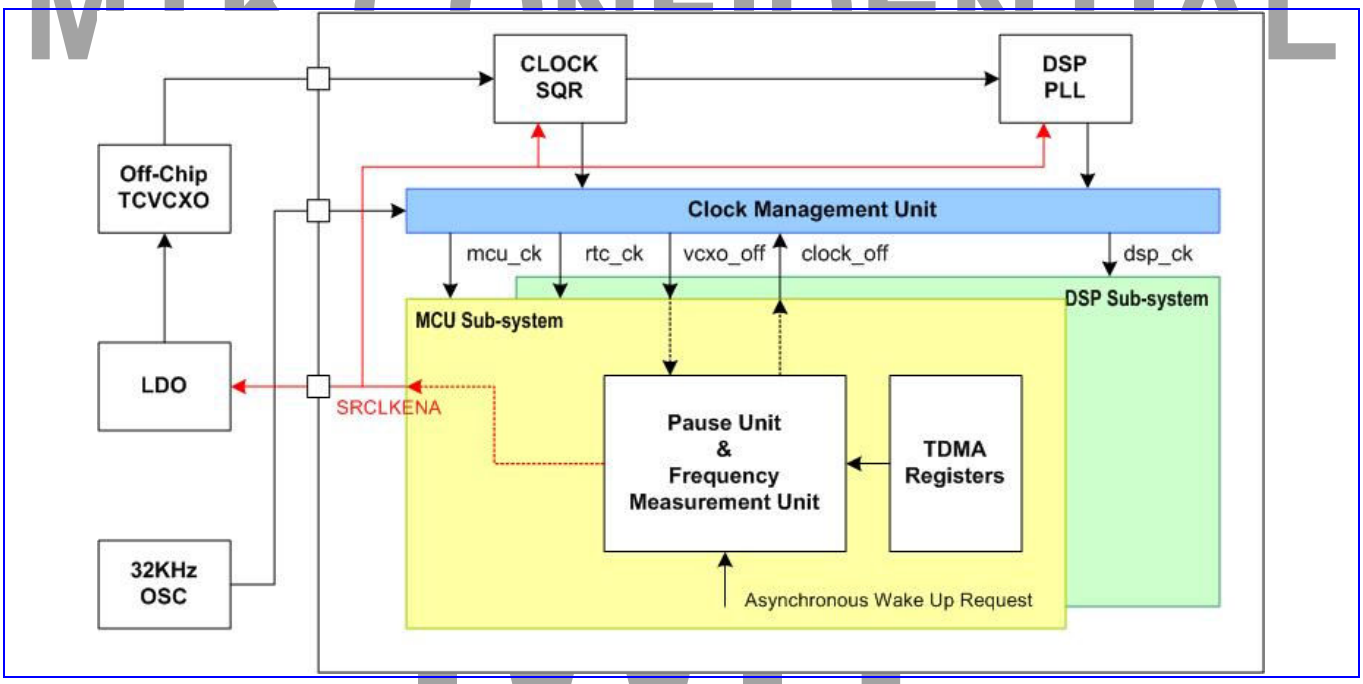

Figure 94 The block diagram of the slow clocking unit

MTK Confidential A (機密)

The slow clocking unit is provided to maintain the synchronization to the base-station timing using a 32KHz crystal oscillator while the 13MHz reference clock is switched off. As shown in Figure 94, this unit is composed of frequency measurement unit, pause unit, and clock management unit.

Because of the inaccuracy of the 32KHz oscillator, a frequency measurement unit is provided to calibrate the 32KHz crystal taking the accurate 13MHz source as the reference. The calibration procedure always takes place prior to the pause period.

The pause unit is used to initiate and terminate the pause mode procedure and it also works as a coarse time-base during the pause period.

The clock management unit is used to control the system clock while switching between the normal mode and the pause mode. SRCLKENA is used to turn on/off the clock squarer, DSP PLL and off-chip TCVCXO. CLOCK_OFF signal is used for gating the main MCU and DSP clock, and VCXO_OFF is used as the acknowledgement signal of the CLOCK_OFF request.

10.2.1 Register Definitions

TDMA +0218h Slow clocking unit control register SM_CON

Bit	15	14	13	12	11	10	9	8	7	6	5	4	3	2	1	0
Name															PAUSE_START	FM_START
Type															W	W
Reset															0	0

FM_START Initiate the frequency measurement procedure

PAUSE_START Initiate the pause mode procedure at the next timer wrap position

TDMA +0220h Slow clocking unit status register SM_STA

Bit	15	14	13	12	11	10	9	8
Name								PAUSE_ABORT
Type								R
Bit	7	6	5	4	3	2	1	0
Name	SETTLE_CPL	PAUSE_CPL	PAUSE_INT	PAUSE_RQST			FM_CPL	FM_RQST
Type	R	R	R	R			R	R

FM_RQST Frequency measurement procedure is requested

FM_CPL Frequency measurement procedure is completed

PAUSE_RQST Pause mode procedure is requested

PAUSE_INT Asynchronous wake up from pause mode

PAUSE_CPL Pause period is completed

SETTLE_CPL Settling period is completed

PAUSE_ABORT Pause mode is aborted because of the reception of interrupt prior to entering pause mode

TDMA +022Ch Slow clocking unit configuration register SM_CNF

Bit	15	14	13	12	11	10	9	8	7	6	5	4	3	2	1	0
Name											MSDC	RTC	EINT	KP	SM	FM
Type											R/W	R/W	R/W	R/W	R/W	R/W
Reset											0	0	0	0	1	1

IWIT
MTK CONFIDENTIAL
NO DISCLOSURE

MTK Confidential A (機密)

FM Enable interrupt generation upon completion of frequency measurement procedure
SM Enable interrupt generation upon completion of pause mode procedure
KP Enable asynchronous wake-up from pause mode by key press
EINT Enable asynchronous wake-up from pause mode by external interrupt
RTC Enable asynchronous wake-up from pause mode by real time clock interrupt
MSDC Enable asynchronous wake-up from pause mode by memory card insertion interrupt

Address	Type	Width	Reset Value	Name	Description
+0200h	R/W	[2:0]	—	SM_PAUSE_M	MSB of pause duration
+0204h	R/W	[15:0]	—	SM_PAUSE_L	16 LSB of pause duration
+0208h	R/W	[13:0]	—	SM_CLK_SETTLE	Off-chip VCXO settling duration
+020Ch	R	[2:0]	—	SM_FINAL_PAUSE_M	MSB of final pause count
+0210h	R	[15:0]	—	SM_FINAL_PAUSE_L	16 LSB of final pause count
+0214h	R	[13:0]	—	SM_QBIT_START	TQ_ COUNT value at the start of the pause
+0218h	W	[1:0]	0x0000	SM_CON	SM control register
+021Ch	R	[7:3,1:0]	0x0000	SM_STA	SM status register
+0220h	R/W	[15:0]	—	SM_FM_DURATION	32KHz measurement duration
+0224h	R	[9:0]	—	SM_FM_RESULT_M	10 MSB of frequency measurement result
+0228h	R	[15:0]	—	SM_FM_RESULT_L	16 LSB of frequency measurement result
+022Ch	R/W	[4:0]	0x0000	SM_CNF	SM configuration register

IWIT
聯發機密不得洩漏
MTK CONFIDENTIAL
NO DISCLOSURE
IWIT

11 Power, Clocks and Reset

This chapter describes the power, clock and reset management functions provided by MT6225. Together with Power Management IC (PMIC), MT6225 offers both fine and coarse resolutions of power control through software programming. With this efficient method, the developer can turn on selective resources accordingly in order to achieve optimized power consumption. The operating modes of MT6225 as well as main power states provided by the PMIC are shown in **Figure 95**.

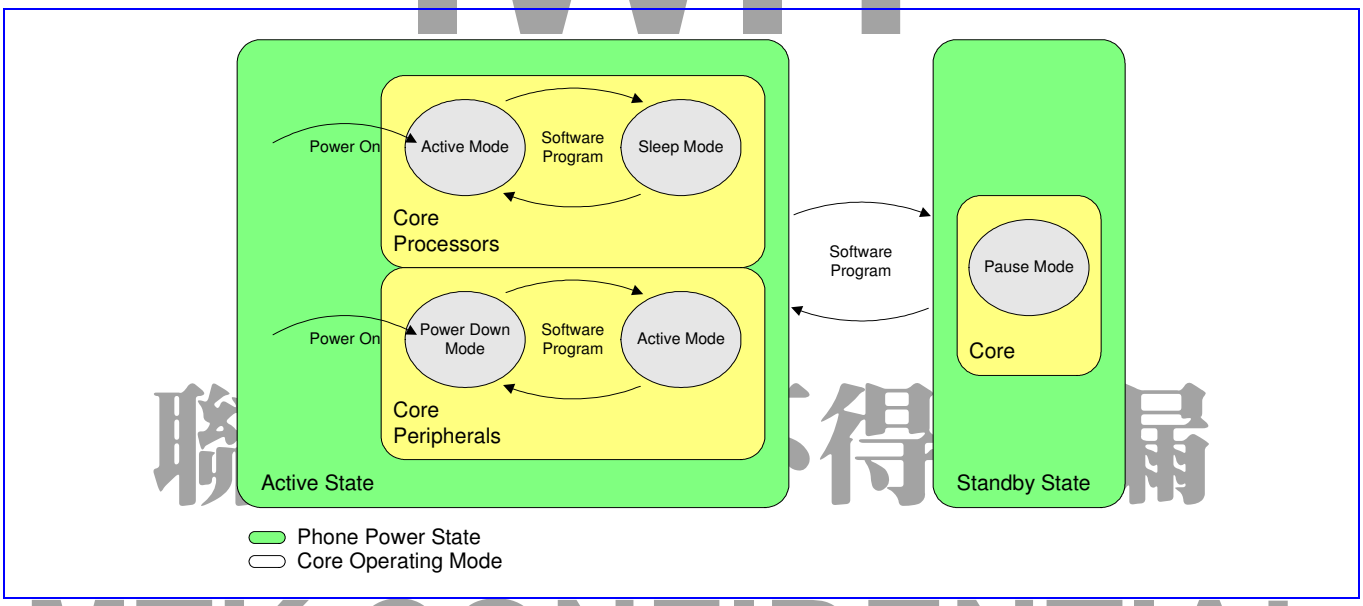

Figure 95 Major Phone Power States and Operating Modes for MT6225 based terminal

11.1 B2PSI

11.1.1 General Description

A 3-wire B2PSI interface is used for connecting to power management IC (PMIC). This bi-directional serial bus interface allows baseband to write to or read from PMIC. The bus protocol utilizes a 16-bit format. B2PSICK is the serial bus clock and is driven by the master. B2PSIDAT is the serial data; master or slave can drive it. B2PSICS is the bus selection signal. Once the B2PSICS goes LOW, baseband starts to transfer the 4 register bits followed by a read/write bit, then waits 3 clock cycles for the PMIC B2PSI state machine to decode the operation for the next 8 data bits. The state machine should count 16 clocks to complete the data transfer.

IWIT
MTK CONFIDENTIAL
NO DISCLOSURE
IWIT

MTK Confidential A (機密)

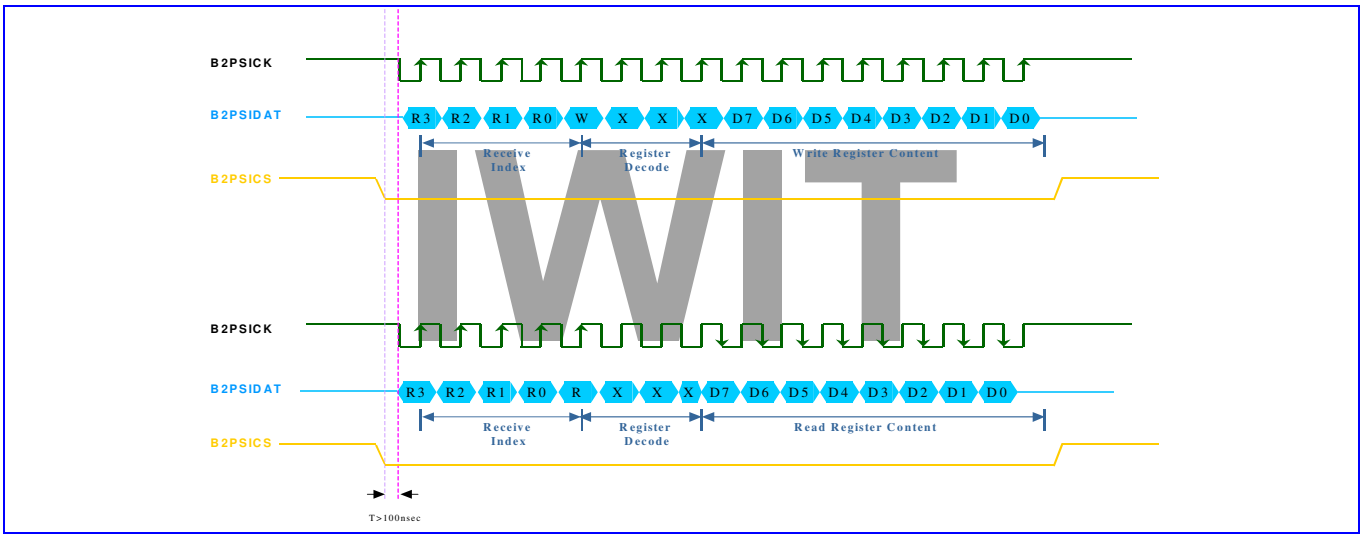

Figure 96 B2PSI bus timing

11.1.2 Register Definitions

B2PSI+0000h B2PSI data register B2PSI_DATA

Bit	15	14	13	12	11	10	9	8	7	6	5	4	3	2	1	0
Name	B2PSI_DATA [15:0]															
Type	R/W															
Reset	0															

B2PSI_DATA The B2PSI DATA format contains 4 bit register + 3 bit do not care + write / read bit + 8 bit data.

- **0** Read operation
- **1** Write operation

To prevent a writing error, B2PSI_DATA must be set to 8216h before the actual data write.

B2PSI +0008h B2PSI baud rate divider register B2PSI _DIV

Bit	15	14	13	12	11	10	9	8	7	6	5	4	3	2	1	0
Name	B2PSI _DIV [15:0]															
Type	R/W															
Reset	0															

B2PSI_DIV B2PSI clock rate divisor. B2PSICK = system clock rate / div.

B2PSI+0010h B2PSI status register B2PSI_STAT

Bit	15	14	13	12	11	10	9	8	7	6	5	4	3	2	1	0
Name															WRITE_SUCCESS	READ_READT
Type															RC	RC
Reset															0	0

READ_READY Read data ready.

- **0** Read data is not ready yet.
- **1** Read data is ready. The bit is cleared by reading B2PSI_STAT register or if B2PSI initializes a new transmit.

聯發機密不得洩漏
MTK CONFIDENTIAL
NO DISCLOSURE
IWIT

MTK Confidential A (機密)

WRITE_SUCCESS B2PSI write successfully.

- **0** B2PSI write is not finished yet.
- **1** B2PSI write has finished. The bit is cleared by reading B2PSI_STAT register or if B2PSI initializes a new transmit.

B2PSI+0014h B2PSI CS to CK time register **B2PSI_TIME**

Bit	15	14	13	12	11	10	9	8	7	6	5	4	3	2	1	0
Name														B2PSI_TIME		
Type														R/W		
Reset														0		

B2PSI_TIME The time interval that first B2PSICK is started after the B2PSICS is active low.
Time interval = 1/system clock * B2PSI_time.

11.2 Clocks

There are two major time bases in the MT6225. For the faster one is the 13 MHz clock originating from an off-chip temperature-compensated voltage controlled oscillator (TCVCXO) that can be either 13MHz or 26MHz. This signal is the input from the SYSCLK pad then is converted to the square-wave signal. The other time base is the 32768 Hz clock generated by an on-chip oscillator connected to an external crystal. **Figure 97** shows the clock sources as well as their utilizations inside the chip.

驛發機密不得洩漏
MTK CONFIDENTIAL
NO DISCLOSURE

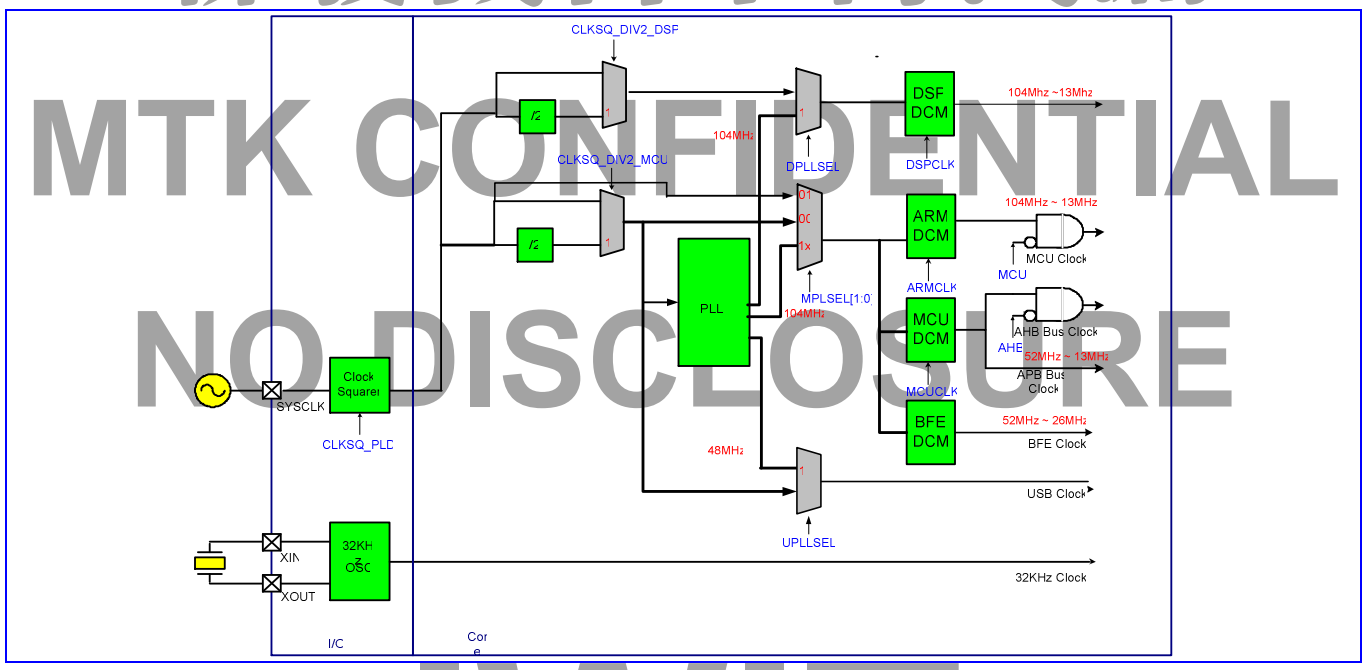

Figure 97 Clock distributions inside the MT6225.

MTK Confidential A (機密)

11.2.1 32.768 KHz Time Base

The 32768 Hz clock is always running. It's mainly used as the time base of the Real Time Clock (RTC) module, which maintains time and date with counters. Therefore, both the 32768Hz oscillator and the RTC module is powered by separate voltage supplies that shall not be powered down when the other supplies do.

In low power mode, the 13 MHz time base is turned off, so the 32768 Hz clock shall be employed to update the critical TDMA timer and Watchdog Timer. This time base is also used to clocks the keypad scanner logic.

11.2.2 13 MHz Time Base

One 1/2-dividers for PLL existing to allow using 26 or 13 MHz TCVCXO.

One phase-locked loops (PLL) to generate 624Mhz clock output, then a frequency divider futher divide 6, 6, 13 to generate 104Mhz, 104Mhz, 48Mhz for three primary clocks, DSP_CLOCK, MCU_CLOCK and USB_CLOCK, respectively. This three primary clocks then feed to DSP Clock Domain and MCU Clock Domain and USB, respectively. The PLL require no off-chip components for operations and can be turn off in order to save power. After power-on, the PLLs are off by default and the source clock signal is selected through multiplexers. The software shall take cares of the PLL lock time while changing the clock selections. The PLL and usages are listed below.

PLL supplies three clock source

DSP system clock, *DSP_CLOCK*. The outputted 104MHz clock is connected to DSP DCM (dynamic clock manager) for dynamically adjusting clock rate by digital clock divider.

MCU system clock, *MCU_CLOCK*, which paces the operations of the MCU cores, MCU memory system, and MCU peripherals as well. The outputted 104MHz clock is connected to ARM DCM and MCU DCM for dynamically adjusting clock rate by digital clock divider.

USB system clock, *USB_CLOCK*. The 48MHz is sent to USB module for its operation.

Note that PLL need some time to become stable after being powered up. The software shall take cares of the PLL lock time before switching them to the proper frequency. Usually, a software loop longer than the PLL lock time is employed to deal with the problem.

For power management, the MCU software program may stop MCU Clock by setting the Sleep Control Register. Any interrupt requests to MCU can pause the sleep mode, and thus MCU return to the running mode.

AHB also can be stop by setting the Sleep Control Register. However the behavior of AHB in sleep mode is a little different from that of MCU. After entering Sleep Mode, it can be temporarily waken up by any "hreq" (bus request), and then goes back to sleep automatically after all "hreqs" de-assert. Any transactions can take place as usual in sleep mode, and it can save power while there is no transaction on it. However the penalty is losing a little system efficiency for switching on and off bus clock, but the impact is small.

11.2.3 Dynamic Clock Switch of MCU Clock

Dynamic Clock Manager is implemented to allow MCU and DSP switching clock dynamically without any jitter, and enabling signal drift, and system can operate stably during any clock rate switch.

Please note that PLL must be enabled and the frequency shall be set as 624MHz, therefore the required MCU/DSP/USB clocks can be generated from 624MHz. Before switching to 52MHz clock rate, the clock from PLL DIV2 will feed through dynamic clock manager (DCM) directly. That means if PLL DIV2 is enabled, the internal clock rate is the half of SYSCLK. Contrarily, the internal clock rate is identical to SYSCLK.

IWIT
聯發機密不得洩漏
MTK CONFIDENTIAL
NO DISCLOSURE
IWIT

MTK Confidential A (機密)

However, the settings of some hardware modules is required to be changed before or after clock rate change. Software has the responsibility to change them at proper timing. The following table is list of hardware modules needed to be changed their setting during clock rate change.

Module Name	Programming Sequence
EMI	1. Low clock speed -> high clock speed Changing wait state before clock change. New wait state will not take effect until current EMI access is complete. Software should insert a period of time before switching clock. 2. High clock speed -> low clock speed Changing wait state after clock change.
NAND	1. Low clock speed -> high clock speed Changing wait state before clock change. New wait state will not take effect until current EMI access is complete. Software should insert a period of time before switching clock. 2. High clock speed -> low clock speed Changing wait state after clock change.
LCD	Change wait state while LCD in IDLE state.

Table 53 Programming sequence during clock switch

聯發機密不得洩漏

11.2.4 Register Definitions

CONFG+0100h PLL Frequency Register PLL

Bit	15	14	13	12	11	10	9	8	7	6	5	4	3	2	1	0
Name		Q_PLL		CALI					RST	UPLL SEL	DPLL SEL	MPLLSEL		PLLT ME	PLLVCOSEL	
Type		R/W		R/W					R/W	R/W	R/W	R/W		R/W	R/W	
Reset		0		0					0	0	0	0		0	00	

PLLVCOSEL Selects VCO in PLL frequency for PLL debug purpose. Default value is 0x0.

PLLTME PLL test mode Enable

- **0** Disable
- **1** Enables

MPLLSEL Select MCU Clock source. Using this mux to gate out unstable clock output from PLL after system boot up

- **00** PLL bypassed, using CLK from CLKSQ, default value after chip power up.
- **01** PLL bypassed, using CLK from SYSCLK
- **10** Using PLL Clock for MCU
- **11** Reserved

DPLLSEL Select DSP Clock source. Using this mux to gate out unstable clock output from PLL after system boot up

- **0** PLL bypassed, using CLK from CLKSQ
- **1** Using PLL Clock for DSP

UPLLSEL Select USB Clock source. Using this mux to gate out unstable clock output from PLL after system boot up

- **0** PLL bypassed, using CLK from CLKSQ
- **1** Using PLL Clock for USB

RST Reset Control of PLL

- **0** Normal Operation

NO DISCLOSURE
IWIT

MTK Confidential A (機密)

1 Reset the PLL

CALI Calibration Control for PLL

Q_PLL Select source of PLL output clock when in test

CONFG+110h Clock Control Register — CLK_CON

Bit	15	14	13	12	11	10	9	8	7	6	5	4	3	2	1	0
Name												DSP_EXTCK	USB_EXTCK	CLKSQ_PLD	CLKSQ_DIV2_MCU	CLKSQ_DIV2_DSP
Type												R/W	R/W	R/W	R/W	R/W
Reset												0	0	0	0	0

CLKSQ_DIV2_DSP Control the clock divider for DSP clock domain

0 Divider bypassed

1 Divider not bypassed

CLKSQ_DIV2_MCU Control the x2 clock divider for MCU clock domain

0 Divider bypassed

1 Divider not bypassed

CLKSQ_PLD Pull Down Control

0 Disable

1 Enables

USB_EXTCK Use external USB clock source.

0 Not use external clock.

1 Use external clock.

DSP_EXTCK Use external DSP clock source.

0 Not use external clock.

1 Use external clock.

聯發機密不得洩漏
MTK CONFIDENTIAL
NO DISCLOSURE
IWIT

CONFG+114h Sleep Control Register — SLEEP_CON

Bit	15	14	13	12	11	10	9	8	7	6	5	4	3	2	1	0
Name														DSP	AHB	MCU
Type														WO	WO	WO
Reset														0	0	0

MCU Stop the MCU Clock to force MCU Processor entering sleep mode. MCU clock will be resumed as long as there comes an interrupt request or system is reset.

0 MCU Clock is running

1 MCU Clock is stopped

AHB Stop the AHB Bus Clock to force the entire bus entering sleep mode. AHB clock will be resumed as long as there comes an interrupt request or system is reset.

0 AHB Bus Clock is running

1 AHB Bus Clock is stopped

DSP Stop the DSP Clock.

0 DSP Bus Clock is running

1 DSP Bus Clock is stopped

MTK Confidential A (機密)

CONFG+0118h MCU Clock Control Register MCUCLK_CON

Bit	15	14	13	12	11	10	9	8	7	6	5	4	3	2	1	0
Name					ARM_FSEL				SRCCLK				MCU_FSEL			
Type					R/W				R/W				R/W			
Reset					3				1				3			

MCU_FSEL MCU clock frequency selection. This control register is used to control the output clock frequency of MCU Dynamic Clock Manager. The clock frequency is from 13MHz to 52MHz. The waveform of the output clock is shown in Fig. **98.**

0 13MHz
1 26MHz
2 39MHz
3 52MHz
Others reserved

When MCU Clock Source bypass PLL (MPLL_SEL[1]==0), the output frequency is controlled by SRCCLK ,CLKSQ_DIV2_MCU , MPLL_SEL[0] and MCU_FSEL[0]

SRCCLK	CLKSQ_DIV2_MCU	MPLL_SEL[0]	MCU_FSEL[0]	
0	**0**	**x**	**x**	13Mhz
1	**1**	**0**	**0**	13Mhz
1	**1**	**1**	**1**	26Mhz

Other illegal

SRCCLK off-chip temperature-compensated voltage controlled oscillator (TCVCXO) frequency identifier.

0 13MHz
1 26MHz

ARM_FSEL ARM clock frequency selection. This control register is used to control the output clock frequency of ARM Dynamic Clock Manager. The clock frequency is from 13MHz to 104MHz.

0 13MHz
1 26MHz
2 39MHz
3 52MHz
4 65MHz
5 78MHz
6 91MHz
7 104MHz
Others reserved

Please note that the clock period of 39MHz is not uniform. The shortest period of 39MHz clock is the same as the period of 52MHz. As a result, the wait states of external interfaces, such as EMI, NAND, and so on, have to be configured based on 52MHz timing. Therefore, the MCU performance executing in external memory at 39MHz may be worse than at 26MHz. 65Mhz, 78MHz and 91MHz are not uniform clocks, either.

Also note that the maximum latency of clock switch is 8 104MHz-clock periods. Software provides at least 8T locking time after clock switch command.

IWIT
聯發機密不得洩漏
MTK CONFIDENTIAL
NO DISCLOSURE
IWIT

MTK Confidential A (機密)

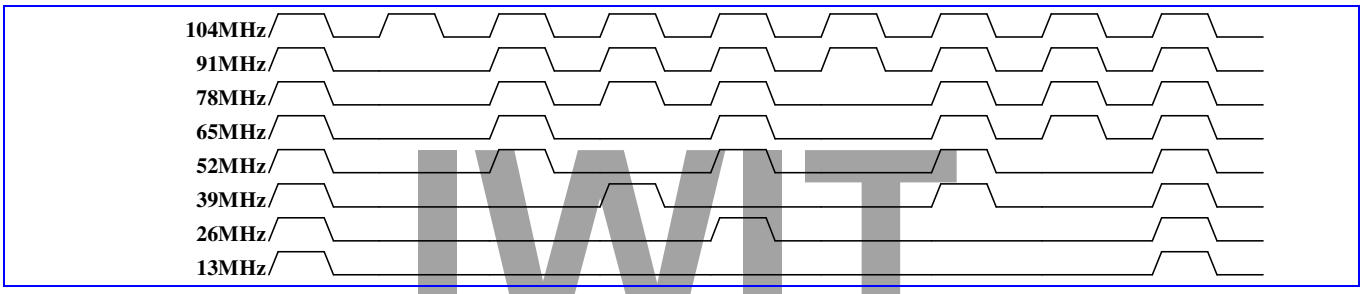

Figure 99 Output of Dynamic Clock Manager

CONFG+011Ch DSP Clock Control Register DSPCLK_CON

Bit	15	14	13	12	11	10	9	8	7	6	5	4	3	2	1	0
Name													DSP_FSEL			
Type													R/W			
Reset													3			

DSP_FSEL DSP clock frequency selection. This control register is used to control the output clock frequency of DSP Dynamic Clock Managers. The clock frequency is from 13MHz to 104MHz. Note that 39MHz, 65MHz, 78MHz, and 91MHz are not a uniform period clock rate.

0 13MHz
1 26MHz
2 39MHz
3 52MHz
4 65MHz
5 78MHz
6 91MHz
7 104MHz
Others reserved

聯發機密不得洩漏
MTK CONFIDENTIAL
NO DISCLOSURE

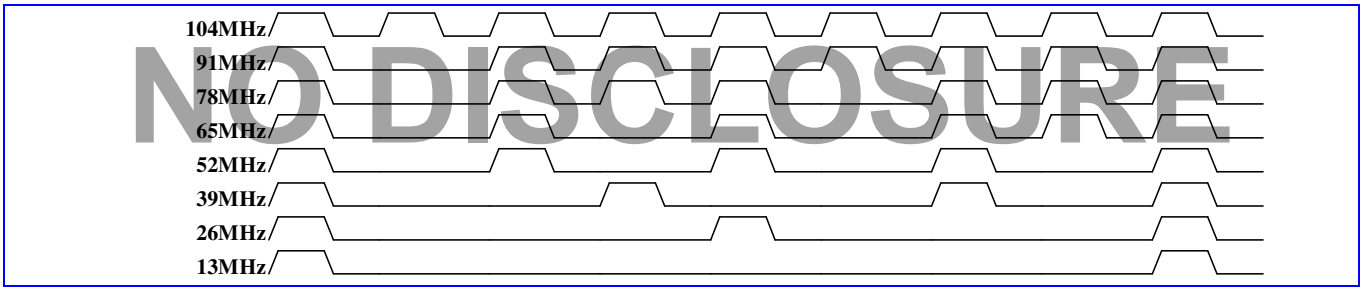

11.3 Reset Generation Unit (RGU)

Figure 100 shows the reset scheme used in MT6225. MT6225 provides three kinds of resets: hardware reset, watchdog reset, and software reset.

MTK Confidential A (機密)

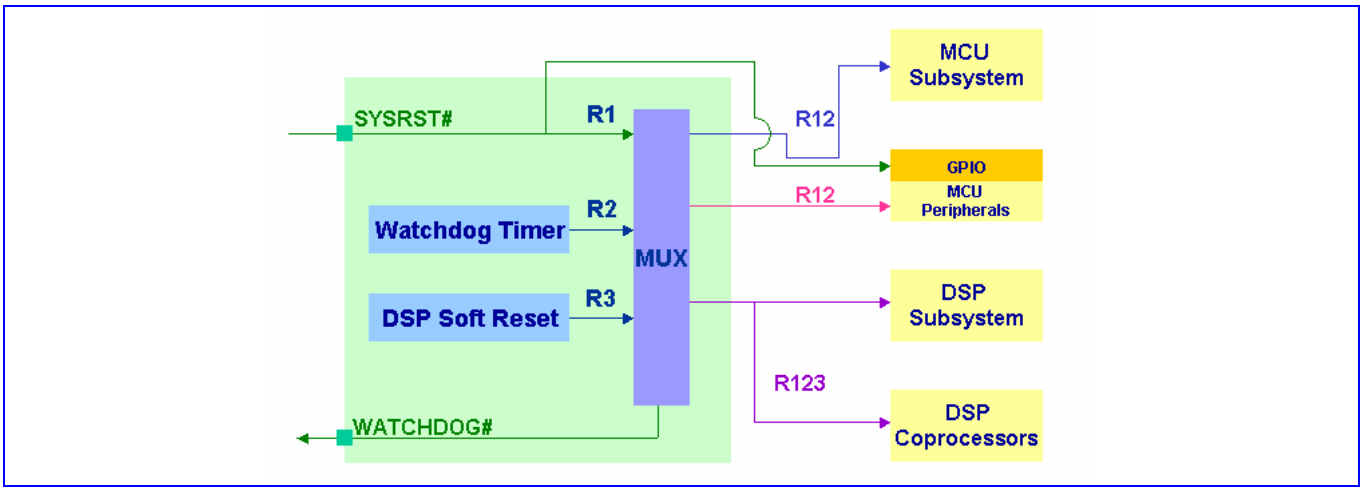

Figure 100 Reset Scheme Used in MT6225

11.3.1 General Description

11.3.1.1 Hardware Reset

This reset is input through the SYSRST# pin, which is driven low during power-on. The hardware reset has a global effect on the chip: all digital and analog circuits are initialized, except the Real Time Clock module. The initial states of the MT6225 sub-blocks are as follows:.

- All analog circuits are turned off.
- All PLLs are turned off and bypassed. The 13 MHz system clock is the default time base.
- Special trap states in GPIO.

11.3.1.2 Watchdog Reset

A watchdog reset is generated when the Watchdog Timer expires: the MCU software failed to re-program the timer counter in time. This situation is typically induced by abnormal software execution, which can be aborted by a hardwired watchdog reset. Hardware blocks that are affected by the watchdog reset are:

- MCU subsystem,
- DSP subsystem, and
- External components (trigged by software).

11.3.1.3 Software Resets

Software resets are local reset signals that initialize specific hardware components. For example, if hardware failures are detected, the MCU or DSP software may write to software reset trigger registers to reset those specific hardware modules to their initial states.

The following modules have software resets.

- DSP Core

聯發機密不得洩漏
MTK CONFIDENTIAL
NO DISCLOSURE
IWIT

MTK Confidential A (機密)

- DSP Coprocessors

11.3.2 Register Definitions

RGU +0000h Watchdog Timer Control Register WDT_MODE

Bit	15	14	13	12	11	10	9	8	7	6	5	4	3	2	1	0
Name	KEY[7:0]											AUTO-RESTART	IRQ	EXTEN	EXTPOL	ENABLE
Type												R/W	R/W	R/W	R/W	R/W
Reset												0	0	0	0	1

ENABLE Enables the Watchdog Timer.

- **0** Disables the Watchdog Timer.
- **1** Enables the Watchdog Timer.

EXTPOL Defines the polarity of the external watchdog pin.

- **0** Active low.
- **1** Active high.

EXTEN Specifies whether or not to generate an external watchdog reset signal.

- **0** The watchdog does not generate an external watchdog reset signal.
- **1** If the watchdog counter reaches zero, an external watchdog signal is generated.

IRQ Issues an interrupt instead of a Watchdog Timer reset. For debug purposes, RGU issues an interrupt to the MCU instead of resetting the system.

- **0** Disable.
- **1** Enable.

AUTO-RESTART Restarts the Watchdog Timer counter with the value of WDT_LENGTH while task ID is written into Software Debug Unit.

- **0** Disable. The counter restarts by writing KEY into the WDT_RESTART register.
- **1** Enable. The counter restarts by writing KEY into the WDT_RESTART register or by writing task ID into the software debug unit.

KEY Write access is allowed if KEY=0x22.

聯發機密不得洩漏
MTK CONFIDENTIAL
NO DISCLOSURE

RGU +0004h Watchdog Time-Out Interval Register WDT_LENGTH

Bit	15	14	13	12	11	10	9	8	7	6	5	4	3	2	1	0
Name	TIMEOUT[10:0]											KEY[4:0]				
Type	WO															
Reset	111_1111_1111b															

KEY Write access is allowed if KEY=08h.

TIMEOUT The counter is restarted with {TIMEOUT [10:0], 1_1111_1111b}. Thus the Watchdog Timer time-out period is a multiple of $512*T_{32k}$=15.6ms.

RGU +0008h Watchdog Timer Restart Register WDT_RESTART

Bit	15	14	13	12	11	10	9	8	7	6	5	4	3	2	1	0
Name	KEY[15:0]															
Type																
Reset																

MTK Confidential A (機密)

KEY Restart the counter if KEY=1971h.

RGU +000Ch Watchdog Timer Status Register WDT_STA

Bit	15	14	13	12	11	10	9	8	7	6	5	4	3	2	1	0
Name	WDT	SW_WDT														
Type	RO	RO														
Reset	0	0														

WDT Indicates the cause of the watchdog reset.

- **0** Reset not due to Watchdog Timer.
- **1** Reset because the Watchdog Timer time-out period expired.

SW_WDT Indicates if the watchdog was triggered by software.

- **0** Reset not due to software-triggered Watchdog Timer.
- **1** Reset due to software-triggered Watchdog Timer.

NOTE: A system reset does not affect this register. This bit is cleared when the WTU_MODE register ENABLE bit is written.

RGU +0010h CPU Peripheral Software Reset Register SW_PERIPH_RSTN

Bit	15	14	13	12	11	10	9	8	7	6	5	4	3	2	1	0
Name		DAMRST	USBRST						KEY							
Type		R/W	R/W													
Reset		0	0													

KEY Write access is allowed if KEY=37h.

DMARST Reset the DMA peripheral.

- **0** No reset.
- **1** Invoke a reset.

USBRST Reset the USB.

- **0** No reset.
- **1** Invoke a reset.

RGU +0014h DSP Software Reset Register SW_DSP_RSTN

Bit	15	14	13	12	11	10	9	8	7	6	5	4	3	2	1	0
Name	RST															
Type	R/W															
Reset	0															

RST Controls the DSP System Reset Control.

- **0** No reset.
- **1** Invoke a reset.

RGU +0018h Watchdog Timer Reset Signal Duration Register WDT_RSTINTREVAL

Bit	15	14	13	12	11	10	9	8	7	6	5	4	3	2	1	0
Name					LENGTH[11:0]											
Type					R/W											

聯發科技不得洩漏
MTK CONFIDENTIAL
NO DISCLOSURE
IWIT

MTK Confidential A (機密)

Reset					FFFh

LENGTH This register indicates the reset duration when Watchdog Timer times out. However, if the WDT_MODE register IRQ bit is set to 1, an interrupt is issued instead of a reset.

RGU+001Ch Watchdog Timer Software Reset Register WDT_SWRST

Bit	15	14	13	12	11	10	9	8	7	6	5	4	3	2	1	0
Name	KEY[15:0]															
Type																
Reset																

Software-triggered Watchdog Timer reset. If the register content matches the KEY, a watchdog reset is issued. However, if the WDT_MODE register IRQ bit is set to 1, an interrupt is issued instead of a reset.

KEY 1209h

11.4 Software Power Down Control

In addition to have Pause Mode at Standby State, the software program can also put each peripherals independently in Power Down Mode at Active State by gating their clock off. The typical logic implemented is described as **Figure 101**. For all these configuration bits, 1 means that the function is Power Down Mode and 0 means that it is in the Active Mode.

聯發機密不得洩漏

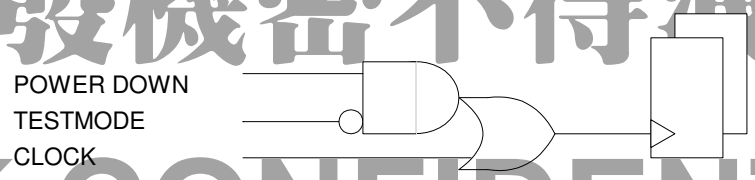

MTK CONFIDENTIAL

Figure 101 Power Down Control at Block Level

11.4.1 Register Definitions

NO DISCLOSURE

CONFG+300h Power Down Control 0 Register PDN_CON0

Bit	15	14	13	12	11	10	9	8	7	6	5	4	3	2	1	0
Name	DSP_DIV2		PLL	MCU_DIV2	CLKSQ					IRDBG			WAVETABLE	GCU	USB	DMA
Type	R/W		R/W	R/W	R/W					R W			R/ W	R/W	R/W	R/W
Reset	1		1	1	0					1			1	1	1	1

DMA Controls the DMA Controller Power Down
USB Controls the USB Controller Power Down
GCU Controls the GCU Controller Power Down
WAVETABLE Controls the Wavetable Power Down
IRDBG Controls the IRDBG Power Down
CLKSQ Controls the Clock squarer Power Down
MCU_DIV2 Controls the MCU DIV2 Power Down
PLL Controls the PLL Power Down

IWIT

MTK Confidential A (機密)

DSP_DIV2 Controls the DSP DIV2 Power Down

CONFG +304h Power Down Control 1 Register PDN_CON1

Bit	15	14	13	12	11	10	9	8	7	6	5	4	3	2	1	0
Name	IRDA	UART 3	SPI	NFI		PWM2	MSDC	UART 2	LCD	ALTER	PWM	SIM	UART 1	GPIO	KP	GPT
Type	R W	R W	R/W	R/W		R/W	R/W	R/W	R/W	R/W	R/W	R/W	R/W	R/W	R/W	R/W
Reset	1	1	1	1		1	1	1	1	1	1	1	0	1	1	1

GPT Controls the General Purpose Timer Power Down
KP Controls the Keypad Scanner Power Down
GPIO Controls the GPIO Power Down
UART1 Controls the UART1 Controller Power Down
SIM Controls the SIM Controller Power Down
PWM Controls the PWM Generator Power Down
ALTER Controls the Alerter Generator Power Down
LCD Controls the Serial LCD Controller Power Down
UART2 Controls the UART2 Controller Power Down
MSDC Controls the MS/SD Controller Power Down
PWM2 Controls the PWM2 Generator Power Down
NFI Controls the NAND FLASH Interface Power Down
SPI Controls the Serial Port Interface Power Down
UART3 Controls the UART3 Controller Power Down
IRDA Controls the IrDA Framer Power Down

聯發機密不得洩漏

CONFG +308h Power Down Control 2 Register PDN_CON2

Bit	15	14	13	12	11	10	9	8	7	6	5	4	3	2	1	0
Name	GMSK	BBRX	I^2C	AAFE	DIV	GCC	BFE	VAFE	AUXAD	FCS	APC	AFC	BPI	BSI	RTC	TDMA
Type	R/W	R/W	R/W	R/W	R/W	R/W	R/W	R/W	R/W	R/W	R/W	R/W	R/W	R/W	R/W	R/W
Reset	1	1	1	1	1	1	1	1	1	1	1	1	1	1	1	1

TDMA Controls the TDMA Power Down
RTC Controls the RTC Power Down
BSI Controls the BSI Power Down. This control will not be updated until both tdma_evtval and qbit_en are asserted.
BPI Controls the BPI Power Down. This control will not be updated until both tdma_evtval and qbit_en are asserted.
AFC Controls the AFC Power Down. This control will not be updated until both tdma_evtval and qbit_en are asserted.
APC Controls the APC Power Down. This control will not be updated until both tdma_evtval and qbit_en are asserted.
FCS Controls the FCS Power Down
AUXAD Controls the AUX ADC Power Down
VAFE Controls the Audio Front End of VBI Power Down
BFE Controls the Base-Band Front End Power Down
GCU Controls the GCU Power Down
DIV Controls the Divider Power Down
AAFE Controls the Audio Front End of MP3 Power Down
I^2C Controls the I^2C Power Down
BBRX Controls the BB RX Power Down

MTK CONFIDENTIAL
NO DISCLOSURE
IWIT

MTK Confidential A (機密)

GMSK Controls the GMSK Power Down

CONFG +30Ch Power Down Control 3 Register PDN_CON3

Bit	15	14	13	12	11	10	9	8	7	6	5	4	3	2	1	0
Name				ISP	RESZ											ICE
Type				R/W	R/W											R/W
Reset				1	1											1

ICE Enables the debug feature of the ARM7EJS core. It controls the DBGEN pin of the ICEBreaker.

RESZ Controls the Image Resizer Power Down

ISP Controls the Image Signal Processor Power Down

CONFG+0310h Power Down Set 0 Register PDN_SET0

Bit	15	14	13	12	11	10	9	8	7	6	5	4	3	2	1	0
Name	DSP_DIV2		PLL	MCU_DIV2	CLKSQ					IRDBG			WAVETABLE	GCU	USB	DMA
Type	W1S		W1S	W1S	W1S					W1S			W1S	W1S	W1S	W1S

CONFG+0314h Power Down Set 1 Register PDN_SET1

Bit	15	14	13	12	11	10	9	8	7	6	5	4	3	2	1	0
Name	IRDA	UART3	SPI	NFI		PWM2	MSDC	UART2	LCD	ALTER	PWM	SIM	UART1	GPIO	KP	GPT
Type	W1S	W1S	W1S	W1S		W1S	W1S	W1S	W1S	W1S	W1S	W1S	W1S	W1S	W1S	W1S

聯發科技機密 不得洩漏

CONFG+0318h Power Down Set 2 Register PDN_SET2

Bit	15	14	13	12	11	10	9	8	7	6	5	4	3	2	1	0
Name	GMSK	BBRX	SCCB	AAFE	DIV	GCC	BFE	VAFE	AUXAD	FCS	APC	AFC	BPI	BSI	RTC	TDMA
Type	W1S	W1S	W1S	W1S	W1S	W1S	W1S	W1S	W1S	W1S	W1S	W1S	W1S	W1S	W1S	W1S

MTK CONFIDENTIAL

CONFG+031Ch Power Down Set 3 Register PDN_SET3

NO DISCLOSURE

Bit	15	14	13	12	11	10	9	8	7	6	5	4	3	2	1	0
Name				ISP	RESZ											ICE
Type				W1S	W1S											W1S

These registers are used to individually set power down control bit. Only the bits set to 1 are in effect, and these power down control bits will set to 1. Else the other bits keep original value.

EACH BIT Set the Associated Power Down Control Bit to 1.

- **0** no effect
- **1** Set corresponding bit to 1

CONFG+0320h Power Down Clear 0 Register PDN_CLR0

Bit	15	14	13	12	11	10	9	8	7	6	5	4	3	2	1	0
Name	DSP_DIV2		PLL	MCU_DIV2	CLKSQ					IRDBG			WAVETABLE	GCU	USB	DMA
Type	W1C		W1C	W1C	W1C					W1C			W1C	W1C	W1C	W1C

MTK Confidential A (機密)

CONFG+0324h Power Down Clear 1 Register PDN_CLR1

Bit	15	14	13	12	11	10	9	8	7	6	5	4	3	2	1	0
Name	IRDA	UART 3	SPI	NFI		PWM2	MSDC	UART 2	LCD	ALTER	PWM1	SIM	UART 1	GPIO	KP	GPT
Type	W1C	W1C	W1C	W1C		W1C	W1C	W1C	W1C	W1C	W1C	W1C	W1C	W1C	W1C	W1C

CONFG+0328h Power Down Clear 2 Register PDN_CLR2

Bit	15	14	13	12	11	10	9	8	7	6	5	4	3	2	1	0
Name	GMSK	BBRX	SCCB	AAFE	DIV	GCC	BFE	VAFE	AUXAD	FCS	APC	AFC	BPI	BSI	RTC	TDMA
Type	W1C	W1C	W1C	W1C	W1C	W1C	W1C	W1C	W1C	W1C	W1C	W1C	W1C	W1C	W1C	W1C

CONFG+032Ch Power Down Clear 3 Register PDN_CLR3

Bit	15	14	13	12	11	10	9	8	7	6	5	4	3	2	1	0
Name				ISP	RESZ											ICE
Type				W1C	W1C											W1C

These registers are used to individually Clear power down control bit. Only the bits set to 1 are in effect, and these power down control bits will set to 0. Else the other bits keep original value.

聯發機密不得洩漏

EACH BIT Clear the Associated Power Down Control Bit.

- **0** no effect
- **1** Set corresponding bit to 0

MTK CONFIDENTIAL

NO DISCLOSURE

IWIT

MTK Confidential A (機密)

12 Analog Front-end & Analog Blocks

12.1 General Description

To communicate with analog blocks, a common control interface for all analog blocks is implemented. In addition, there are some dedicated interfaces for data transfer. The common control interface translates APB bus write and read cycle for specific addresses related to analog front-end control. During writing or reading of any of these control registers, there is a latency associated with transferring of data to or from the analog front-end. Dedicated data interface of each analog block is implemented in the corresponding digital block. The Analog Blocks includes the following analog function for complete GSM/GPRS base-band signal processing:

1. *Base-band RX*: For I/Q channels base-band A/D conversion
2. *Base-band TX*: For I/Q channels base-band D/A conversion and smoothing filtering, DC level shifting
3. *RF Control*: Two DACs for automatic power control (APC) and automatic frequency control (AFC) are included. Their outputs are provided to external RF power amplifier and VCXO), respectively.
4. *Auxiliary ADC*: Providing an ADC for battery and other auxiliary analog function monitoring
5. *Audio mixed-signal blocks:* It provides complete analog voice signal processing including microphone amplification, A/D conversion, D/A conversion, earphone driver, and etc. Besides, dedicated stereo D/A conversion and amplification for audio signals are included).
6. *Clock Generation*: A clock squarer for shaping system clock, and three PLLs that provide clock signals to DSP, MCU, and USB units are included
7. *XOSC32*: It is a 32-KHz crystal oscillator circuit for RTC application Analog Block Descriptions

IWIT
聯發機密不得洩漏
MTK CONFIDENTIAL
NO DISCLOSURE
IWIT

12.1.1 BBRX

12.1.1.1 Block Descriptions

The receiver (RX) performs base-band I/Q channels downlink analog-to-digital conversion:

1. *Analog input multiplexer:* For each channel, a 4-input multiplexer that supports offset and gain calibration is included.
2. *A/D converter:* Two 14-bit sigma-delta ADCs perform I/Q digitization for further digital signal processing.

12.1.1.2 Functional Specifications

The functional specifications of the base-band downlink receiver are listed in the following table.

Symbol	Parameter	Min	Typical	Max	Unit
N	Resolution		14		Bit
FC	Clock Rate		26		MHz
FS	Output Sampling Rate		13/12		MSPS
	Input Swing When GAIN='0'		0.8*AVDD 0.4*AVDD		Vpk Vpk

MTK Confidential A (機密)

	When GAIN='1'				
OE	Offset Error		+/- 10		mV
FSE	Full Swing Error		+/- 30		mV
	I/Q Gain Mismatch			0.5	dB
SINAD	Signal to Noise and Distortion Ratio - 45kHz sine wave in [0:90] kHz bandwidth - 145kHz sine wave in [10:190] kHz bandwidth	65 65			dB dB
ICN	Idle channel noise - [0:90] kHz bandwidth - [10:190] kHz bandwidth			-74 -70	dB dB
DR	Dynamic Range - [0:90] kHz bandwidth - [10:190] kHz bandwidth	74 70			dB dB
RIN	Input Resistance	75			kΩ
DVDD	Digital Power Supply	1.6	1.8	2.0	V
AVDD	Analog Power Supply	2.5	2.8	3.1	V
T	Operating Temperature	-20		80	℃
	Current Consumption Power-up Power-Down		5 5		mA µA

Table 54 Base-band Downlink Specifications

IWIT
聯發機密不得洩漏
MTK CONFIDENTIAL
NO DISCLOSURE

12.1.2 BBTX

12.1.2.1 Block Descriptions

The transmitter (TX) performs base-band I/Q channels up-link digital-to-analog conversion. Each channel includes:

1. *10-Bits D/A Converter:* It converts digital GMSK modulated signals to analog domain. The input to the DAC is sampled at 4.33-MHz rate with 10-bits resolution.
2. *Smoothing Filter:* The low-pass filter performs smoothing function for DAC output signals with a 350-kHz 2nd-order Butterworth frequency response.

12.1.2.2 Function Specifications

The functional specifications of the base-band uplink transmitter are listed in the following table.

Symbol	Parameter	Min	Typical	Max	Unit
N	Resolution		10		Bit
FS	Sampling Rate		4.33		MSPS
SINAD	Signal to Noise and Distortion Ratio	57	60		dB
	Output Swing	0.18*AVDD		0.89*AVDD	V
VOCM	Output CM Voltage	0.34*AVDD	0.5*AVDD	0.62*AVDD	V

IWIT

MTK Confidential A (機密)

	Output Capacitance			20	PF
	Output Resistance	10			KΩ
DNL	Differential Nonlinearity		+/- 0.5		LSB
INL	Integral Nonlinearity		+/- 1.0		LSB
OE	Offset Error		+/- 15		mV
FSE	Full Swing Error		+/- 30		mV
FCUT	Filter –3dB Cutoff Frequency	300	350	400	KHz
ATT	Filter Attenuation at 100-KHz 270-KHz 4.33-MHz	0.1 2.2 46.4	0.0 1.3 43.7	0.0 0.8 41.4	dB dB dB
	I/Q Gain Mismatch		+/- 0.5		dB
	I/Q Gain Mismatch Correction Range	-1.18		+1.18	dB
DVDD	Digital Power Supply	1.6	1.8	2.0	V
AVDD	Analog Power Supply	2.5	2.8	3.1	V
T	Operating Temperature	-20		80	℃
	Current Consumption Power-up Power-Down		5 5		mA µA

Table 55 Base-band Uplink Transmitter Specifications

聯發機密不得洩漏

12.1.3 AFC-DAC

MTK CONFIDENTIAL

12.1.3.1 Block Descriptions

As shown in the following figure, together with a 2nd-oder digital sigma-delta modulator, AFC-DAC is designed to produce a single-ended output signal at AFC pin. AFC pin should be connected to an external 1st-order R-C low pass filter to meet the 13-bits resolution (DNL) requirement[1].

NO DISCLOSURE

The AFC_BYP pin is the mid-tap of a resistor divider inside the chip to offer the AFC output common-mode level. Nominal value of this common-mode voltage is half the analog power supply, and typical value of output impedance of AFC_BYP pin is about 21kΩ. To suppress the noise on common mode level, it is suggested to add an external capacitance between AFC_BYP pin and ground. The value of the bypass capacitor should be chosen as large as possible but still meet the settling time requirement set by overall AFC algorithm[2].

[1] DNL performance depends on external output RC filter bandwidth: the narrower the bandwidth, the better the DNL. Thus, there exists a tradeoff between output setting speed and DNL performance

[2] AFC_BYP output impedance and bypass capacitance determine the common-mode settling RC time constant. Insufficient common-mode settling will affect the INL performance. A typical value of 1nF is suggested.

MTK Confidential A (機密)

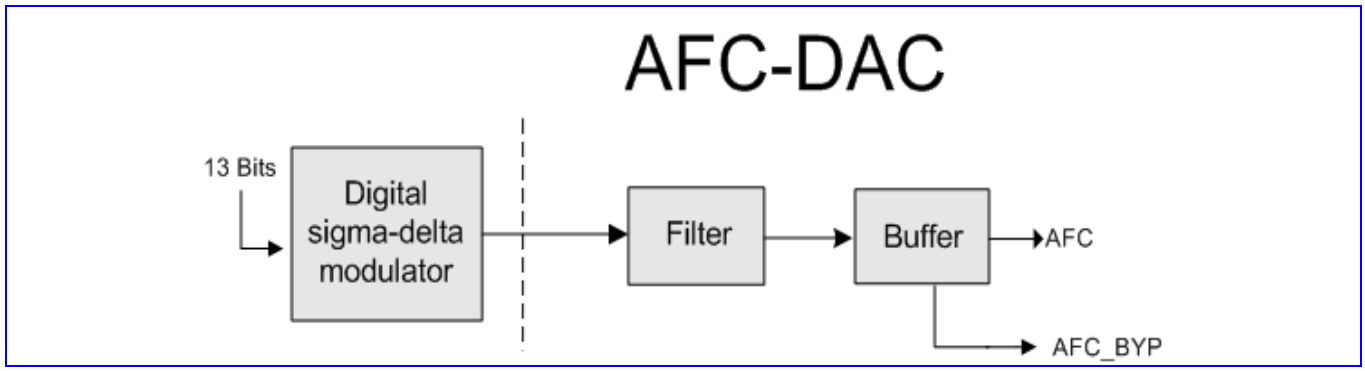

Figure 102 Block diagram of AFC-DAC

12.1.3.2 Functional Specifications

The following table gives the electrical specification of AFC-DAC.

Symbol	Parameter	Min	Typical	Max	Unit
N	Resolution		13		Bit
FS	Sampling Rate		6500		KHz
DVDD	Digital Power Supply	1.6	1.8	2.0	V
AVDD	Analog Power Supply	2.6	2.8	3.1	V
T	Operating Temperature	-20		80	℃
	Current Consumption Power-up Power-Down		1.2	1	mA µA
	Output Swing		0.75*AVDD		V
	Output Resistor (in AFC output RC network)	1			KΩ
DNL	Differential Nonlinearity		+1/-1		LSB
INL	Integral Nonlinearity		+4.0/-4.0		LSB

Table 56 Functional specification of AFC-DAC

聯發機密不得洩漏
MTK CONFIDENTIAL
NO DISCLOSURE

12.1.4 APC-DAC

12.1.4.1 Block Descriptions

The APC-DAC is a 10-bits DAC with output buffer aimed for automatic power control. Here blow are its analog pin assignment and functional specification tables.

12.1.4.2 Function Specifications

IWIT

Symbol	**Parameter**	**Min**	**Typical**	**Max**	**Unit**
N	Resolution		10		Bit
FS	Sampling Rate			1.0833	MSPS
SINAD	Signal to Noise and Distortion Ratio		50		dB

MTK Confidential A (機密)

	(10-KHz Sine with 1.0V Swing & 100-KHz BW)				
	99% Settling Time (Full Swing on Maximal Capacitance)			5	µS
	Output Swing			AVDD-0.2	V
	Output Capacitance			200	pF
	Output Resistance	10			KΩ
DNL	Differential Nonlinearity		+/- 0.5		LSB
INL	Integral Nonlinearity		+/- 1.0		LSB
OE	Offset Error		+/- 10		mV
FSE	Full Swing Error		+/- 10		mV
DVDD	Digital Power Supply	1.6	1.8	2.0	V
AVDD	Analog Power Supply	2.5	2.8	3.1	V
T	Operating Temperature	-20		80	℃
	Current Consumption Power-up Power-Down		600 1		µA µA

Table 57 APC-DAC Specifications

聯發機密不得洩漏

12.1.5 Auxiliary ADC

12.1.5.1 Block Descriptions

The auxiliary ADC includes the following functional blocks:

1. *Analog Multiplexer:* The analog multiplexer selects signal from one of the seven auxiliary input pins. Real word message to be monitored, like temperature, should be transferred to the voltage domain.
2. *10 bits A/D Converter:* The ADC converts the multiplexed input signal to 10-bit digital data.

MTK CONFIDENTIAL

12.1.5.2 Function Specifications

The functional specifications of the auxiliary ADC are listed in the following table.

NO DISCLOSURE

Symbol	Parameter	Min	Typical	Max	Unit
N	Resolution		10		Bit
FC	Clock Rate	0.1	1.0833	5	MHz
FS	Sampling Rate @ N-Bit			5/(N+1)	MSPS
	Input Swing	1.0		AVDD	V
VREFP	Positive Reference Voltage (Defined by AUX_REF pin)	1.0		AVDD	V
CIN	Input Capacitance Unselected Channel Selected Channel			 50 1.2	fF pF
RIN	Input Resistance Unselected Channel Selected Channel	 10 1.8			 MΩ MΩ

IWIT

MTK Confidential A (機密)

RS	Resistor String Between AUX_REF pin & ground Power Up Power Down	35 10	50	65	KΩ MΩ
	Clock Latency		11		1/FC
DNL	Differential Nonlinearity		+0.5/-0.5		LSB
INL	Integral Nonlinearity		+1.0/-1.0		LSB
OE	Offset Error		+/- 10		mV
FSE	Full Swing Error		+/- 10		mV
SINAD	Signal to Noise and Distortion Ratio (10-KHz Full Swing Input & 13-MHz Clock Rate)		50		dB
DVDD	Digital Power Supply	1.6	1.8	2.0	V
AVDD	Analog Power Supply	2.5	2.8	3.1	V
T	Operating Temperature	-20		80	℃
	Current Consumption Power-up Power-Down		300 1		µA µA

Table 58 The Functional specification of Auxiliary ADC

IWIT
聯發機密不得洩漏

12.1.6 Audio mixed-signal blocks

12.1.6.1 Block Descriptions

Audio mixed-signal blocks (AMB) integrate complete voice uplink/downlink and audio playback functions. As shown in the following figure, it includes mainly three parts. The first consists of stereo audio DACs and speaker amplifiers for audio playback. The second is the voice downlink path, including voice-band DACs and amplifiers, which produces voice signal to earphone or other auxiliary output device. Amplifiers in these two blocks are equipped with multiplexers to accept signals from internal audio/voice or external radio sources. The last is the voice uplink path, which is the interface between microphone (or other auxiliary input device) input and MT6225 DSP. A set of bias voltage is provided for external electret microphone..

MTK CONFIDENTIAL
NO DISCLOSURE
IWIT

MTK Confidential A (機密)

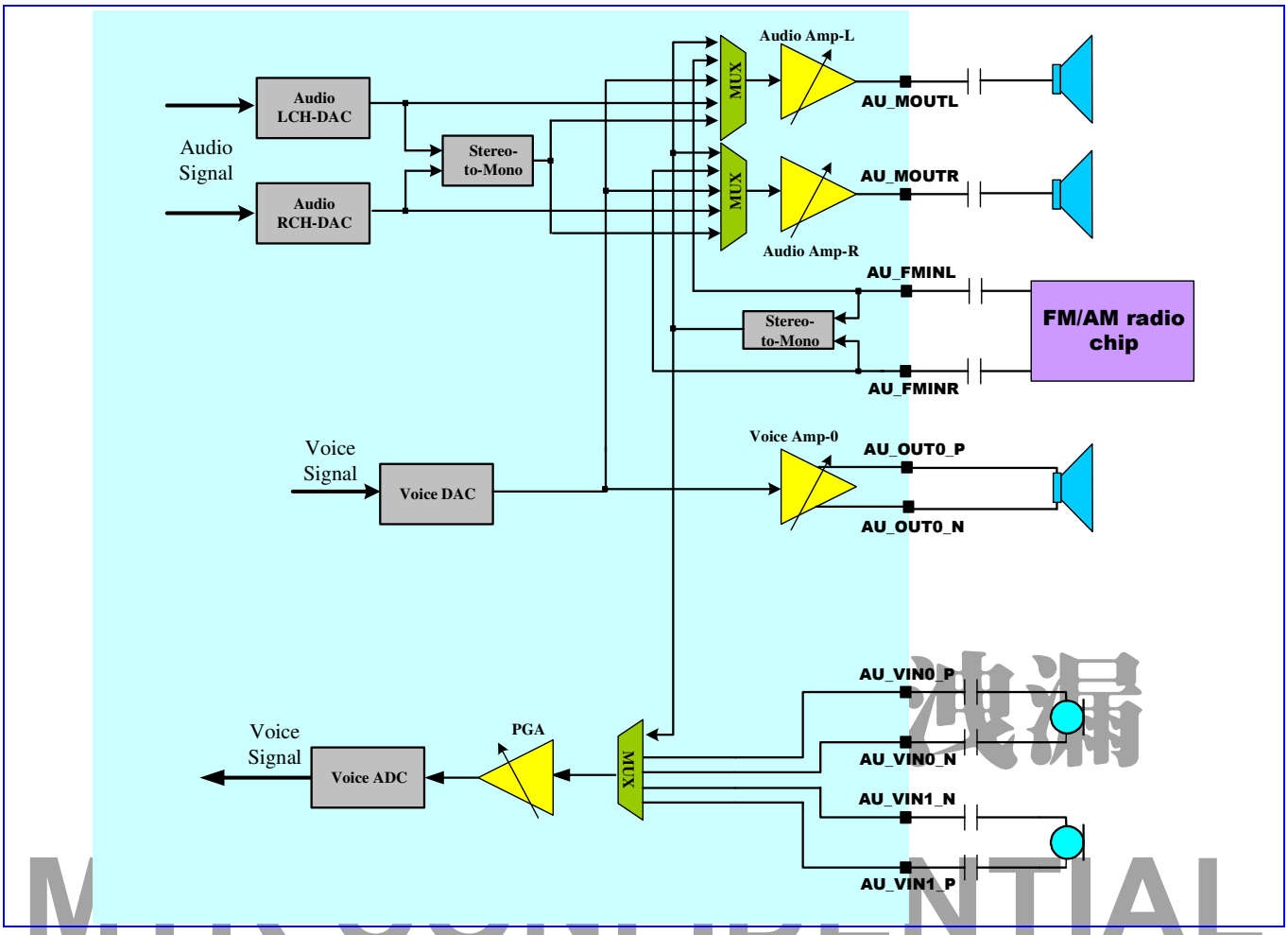

洩漏
MTK CONFIDENTIAL

Figure 103 Block diagram of audio mixed-signal blocks.

12.1.6.2 Functional Specifications

NO DISCLOSURE

The following table gives functional specifications of voice-band uplink/downlink blocks.

Symbol	Parameter	Min	Typical	Max	Unit
FS	Sampling Rate		4096		KHz
CREF	Decoupling Cap Between AU_VREF_P And AU_VREF_N		47		NF
DVDD	Digital Power Supply	1.6	1.8	2.0	V
AVDD	Analog Power Supply	2.5	2.8	3.1	V
T	Operating Temperature	-20		80	℃
IDC	Current Consumption		5		mA
VMIC	Microphone Biasing Voltage		1.9		V
IMIC	Current Draw From Microphone Bias			2	mA

IWIT

MTK Confidential A (機密)

	Pins				
Uplink Path[3]					
SINAD	Signal to Noise and Distortion Ratio Input Level: -40 dbm0 Input Level: 0 dbm0	29	69		dB dB
RIN	Input Impedance (Differential)	13	20	27	KΩ
ICN	Idle Channel Noise			-67	dBm0
XT	Crosstalk Level			-66	dBm0
Downlink Path[4]					
SINAD	Signal to Noise and Distortion Ratio Input Level: -40 dBm0 Input Level: 0 dBm0	29	69		dB dB
RLOAD	Output Resistor Load (Differential)	28			Ω
CLOAD	Output Capacitor Load			200	pF
ICN	Idle Channel Noise of Transmit Path			-67	dBm0
XT	Crosstalk Level on Transmit Path			-66	dBm0

Table 59 Functional specifications of analog voice blocks

聯發機密不得洩漏

Functional specifications of the audio blocks are described in the following.

Symbol	Parameter	Min	Typical	Max	Unit
FCK	Clock Frequency		Fs*128		KHz
Fs	Sampling Rate	32	44.1	48	KHz
AVDD	Power Supply	2.6	2.8	3.1	V
T	Operating Temperature	-20		80	℃
IDC	Current Consumption		5		mA
PSNR	Peak Signal to Noise Ratio		80		dB
DR	Dynamic Range		80		dB
VOUT	Output Swing for 0dBFS Input Level		0.85		Vrms
THD	Total Harmonic Distortion 45mW at 16 Ω Load			-40 -60	dB dB

MTK CONFIDENTIAL
NO DISCLOSURE
IWIT
IWIT

[3] For uplink-path, not all gain setting of VUPG meets the specification listed on table, especially for the several highest gains. The maximum gain that meets the specification is to be determined.

[4] For downlink-path, not all gain setting of VDPG meets the specification listed on table, especially for the several lowest gains. The minimum gain that meets the specification is to be determined.

MTK Confidential A (機密)

	22mW at 32 Ω Load				
RLOAD	Output Resistor Load (Single-Ended)	16			Ω
CLOAD	Output Capacitor Load			200	pF
XT	L-R Channel Cross Talk			TBD	dB

Table 60 Functional specifications of the analog audio blocks

12.1.7 Clock Squarer

12.1.7.1 Block Descriptions

For most VCXO, the output clock waveform is sinusoidal with too small amplitude (about several hundred mV) to make MT6228 digital circuits function well. Clock squarer is designed to convert such a small signal to a rail-to-rail clock signal with excellent duty-cycle. It provides also a pull-down function when the circuit is powered-down.

12.1.7.2 Function Specifications

The functional specification of clock squarer is shown in Table 61.

Symbol	Parameter	Min	Typical	Max	Unit
Fin	Input Clock Frequency		13		MHz
Fout	Output Clock Frequency		13		MHz
Vin	Input Signal Amplitude		500	AVDD	mVpp
DcycIN	Input Signal Duty Cycle		50		%
DcycOUT	Output Signal Duty Cycle	DcycIN-5		DcycIN+5	%
TR	Rise Time on Pin CLKSQOUT			5	ns/pF
TF	Fall Time on Pin CLKSQOUT			5	ns/pF
DVDD	Digital Power Supply	1.3	1.5	1.7	V
AVDD	Analog Power Supply	2.5	2.8	3.1	V
T	Operating Temperature	-20		80	℃
	Current Consumption		TBD		MA

Table 61 The Functional Specification of Clock Squarer

12.1.7.3 Application Notes

Here below in the figure is an equivalent circuit of the clock squarer. Please be noted that the clock squarer is designed to accept a sinusoidal input signal. If the input signal is not sinusoidal, its harmonic distortion should be low enough to not produce a wrong clock output. As an reference, for a 13MHz sinusoidal signal input with amplitude of 0.2V the harmonic distortion should be smaller than 0.02V.

聯發機密不得洩漏
MTK CONFIDENTIAL
NO DISCLOSURE
IWIT

MTK Confidential A (機密)

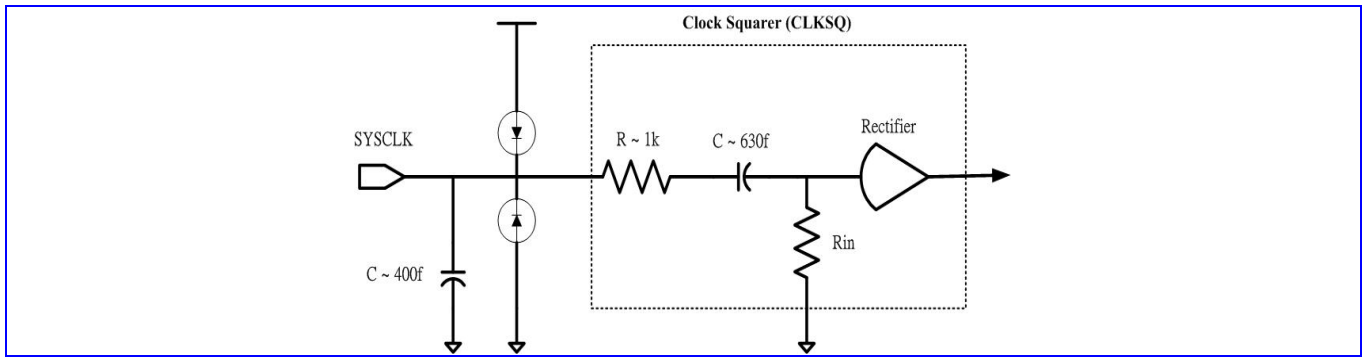

Figure 104 Equivalent circuit of Clock Squarer.

12.1.8 Phase Locked Loop

12.1.8.1 Block Descriptions

MT6228 includes three PLLs: DSP PLL, MCU PLL, and USB PLL. DSP PLL and MCU PLL are identical and programmable to provide either 52MHz or 78 MHz output clock while accepts 13MHz signal. USB PLL is designed to accept 4MHz input clock signal and provides 48MHz output clock.

12.1.8.2 Function Specifications

聯發機密不得洩漏

The functional specification of DSP/MCU PLL is shown in the following table.

Symbol	Parameter	Min	Typical	Max	Unit
Fin	Input Clock Frequency		13		MHz
Fout	Output Clock Frequency	52		78	MHz
	Lock-in Time		TBD		Ms
	Output Clock Duty Cycle	40	50	60	%
	Output Clock Jitter		650		ps
DVDD	Digital Power Supply	1.6	1.8	2.0	V
AVDD	Analog Power Supply	2.5	2.8	3.1	V
T	Operating Temperature	-20		80	℃
	Current Consumption		TBD		µA

MTK CONFIDENTIAL
NO DISCLOSURE

Table 62 The Functional Specification of DSP/MCU PLL

The functional specification of USB PLL is shown below.

Symbol	Parameter	Min	Typical	Max	Unit
Fin	Input Clock Frequency		4		MHz
Fout	Output Clock Frequency		48		MHz
	Lock-in Time		TBD		µs
	Output Clock Duty Cycle	40	50	60	%
	Output Clock Jitter		650		ps

IWIT

MTK Confidential A (機密)

DVDD	Digital Power Supply	1.3	1.5	1.7	V
AVDD	Analog Power Supply	2.5	2.8	3.1	V
T	Operating Temperature	-20		80	℃
	Current Consumption		TBD		µA

Table 63 The Functional Specification of USB PLL

12.1.9 32-KHz Crystal Oscillator

12.1.9.1 Block Descriptions

The low-power 32-KHz crystal oscillator XOSC32 is designed to work with an external piezoelectric 32.768kHz crystal and a load composed of two functional capacitors, as shown in the following figure.

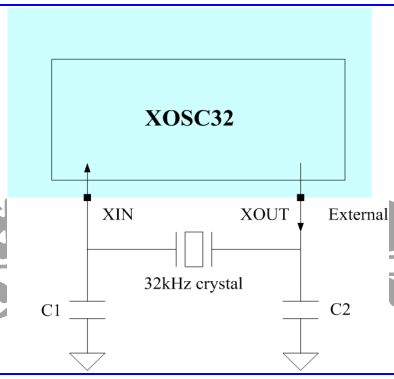

Figure 105 Block diagram of XOSC32

12.1.9.2 Functional specifications

The functional specification of XOSC32 is shown in the following table.

Symbol	Parameter	Min	Typical	Max	Unit
AVDDRTC	Analog power supply	1.2	1.5	2	V
Tosc	Start-up time			5	sec
Dcyc	Duty cycle		50		%
TR	Rise time on XOSCOUT		TBD		ns/pF
TF	Fall time on XOSCOUT		TBD		ns/pF
	Current consumption			5	µA
	Leakage current		1		µA
T	Operating temperature	-20		80	℃

Table 64 Functional Specification of XOSC32

Here below are a few recommendations for the crystal parameters for use with XOSC32.

Symbol	Parameter	Min	Typical	Max	Unit
F	Frequency range		32768		Hz

聯發機密 洩漏
MTK CONFIDENTIAL
NO DISCLOSURE
IWIT

MTK Confidential A (機密)

GL	Drive level			5	uW
Δf/f	Frequency tolerance		+/- 20		Ppm
ESR	Series resistance			50	KΩ
C0	Static capacitance			1.6	pF
CL[5]	Load capacitance	6		12.5	pF

Table 65 Recommended Parameters of the 32kHz crystal

12.2 MCU Register Definitions

12.2.1 BBRX

MCU APB bus registers for BBRX ADC are listed as followings.

MIXED+0300h BBRX ADC Analog-Circuit Control Register BBRX_AC_CON

Bit	15	14	13	12	11	10	9	8	7	6	5	4	3	2	1	0
Name				DITHEN	QSEL		ISEL		RSV	GAIN		CALBIAS				
Type				R/W	R/W		R/W		R/W	R/W		R/W				
Reset				0	00		00		0	0		00000				

Set this register for analog circuit configuration controls.

CALBIAS The register field is for control of biasing current in BBRX mixed-signal module. It is coded in 2's complement. That is, its maximum is 15 and minimum is –16. Biasing current in BBRX mixed-signal module has impact on the performance of A/D conversion. The larger the value of the register field, the larger the biasing current in BBRX mixed-signal module, and the larger the SNR.

GAIN The register bit is for configuration of gain control of analog inputs in GSM RX mixed-signal module.

- **00** Input range is 0.8x AVDD for analog inputs in GSM RX mixed-signal module.
- **01** Input range is 0.4x AVDD for analog inputs in GSM RX mixed-signal module.
- **10** Input range is 0.57x AVDD for analog inputs in GSM RX mixed-signal module.
- **11** Input range is 0.33x AVDD for analog inputs in GSM RX mixed-signal module.

ISEL Loopback configuration selection for I-channel in BBRX mixed-signal module

- **00** Normal mode
- **01** Loopback TX analog I
- **10** Loopback TX analog Q
- **11** Select the grounded input

QSEL Loopback configuration selection for Q-channel in BBRX mixed-signal module

- **00** Normal mode
- **01** Loopback TX analog Q
- **10** Loopback TX analog I
- **11** Select the grounded input

[5] CL is the parallel combination of C1 and C2 in the block diagram.

IWIT
聯發機密不得洩漏
MTK CONFIDENTIAL
NO DISCLOSURE
IWIT

MTK Confidential A (機密)

DITHDIS Dither feature Disable control register, which can effectively reduce the THD (total harmonic distortion) of the BBRX ADC.

0 turn on the dither (default value)

1 Disable the dither

12.2.2 BBTX

MCU APB bus registers for BBTX DAC are listed as followings.

MIXED+0400h BBTX DAC Analog-Circuit Control Register 0 — BBTX_AC_CON0

Bit	15	14	13	12	11	10	9	8	7	6	5	4	3	2	1	0
Name	CALRCDONE	STARTCALRC	GAIN			CALRCSEL			TRIMI				TRIMQ			
Type	R	R/W	R/W			R/W			R/W				R/W			
Reset	0	0	000			000			0000				0000			

Set this register for analog circuit configuration controls. The procedure to perform calibration processing for smoothing filter in BBTX mixed-signal module is as follows:

1. Write 1 to the register bit CARLC in the register TX_CON of Baseband Front End in order to activate clock required for calibration process. Initiate calibration process.
2. Write 1 to the register bit STARTCALRC. Start calibration process.
3. Read the register bit CALRCDONE. If read as 1, then calibration process finished. Otherwise repeat the step.
4. Write 0 to the register bit STARTCALRC. Stop calibration process.
5. Write 0 to the register bit CARLC in the register TX_CON of Baseband Front End in order to deactivate clock required for calibration process. Terminate calibration process.
6. The result of calibration process can be read from the register field CALRCOUT of the register BBTX_AC_CON1. Software can set the value to the register field CALRCSEL for 3-dB cutoff frequency selection of smoothing filter in DAC of BBTX.

Remember to set the register field CALRCCONT of the register BBTX_AC_CON1 to 0xb before the calibration process. It only needs to be set once.

TRIMQ The register field is used to control gain trimming of Q-channel DAC in BBTX mixed-signal module. It is coded in 2's complement, that is, with maximum 15 and minimum –16.

TRIMI The register field is used to control gain trimming of I-channel DAC in BBTX mixed-signal module. It is coded in 2's complement, that is, with maximum 15 and minimum –16.

CALRCSEL The register field is for selection of cutoff frequency of smoothing filter in BBTX mixed-signal module. It is coded in 2's complement. That is, its maximum is 3 and minimum is –4.

GAIN The register field is used to control gain of DAC in BBTX mixed-signal module. It has impact on both of I- and Q-channel DAC in BBTX mixed-signal module. It is coded in 2's complement, that is, with maximum 3 and minimum –4.

STARTCALRC Whenever 1 is writing to the bit, calibration process for smoothing filter in BBTX mixed-signal module will be triggered. Once the calibration process is completed, the register bit CARLDONE will be read as 1.

IWIT 聯發機密不得洩漏 MTK CONFIDENTIAL NO DISCLOSURE IWIT

MTK Confidential A (機密)

CALRCDONE The register bit indicates if calibration process for smoothing filter in BBTX mixed-signal module has finished. When calibration processing finishes, the register bit will be 1. When the register bit STARTCALRC is set to 0, the register bit becomes 0 again.

MIXED+0404h BBTX DAC Analog-Circuit Control Register 1

BBTX_AC_CON 1

Bit	15	14	13	12	11	10	9	8	7	6	5	4	3	2	1	0
Name	CALRCOUT			FLOAT	CALRCCNT						CALBIAS			CMV		
Type	R			R/W	R/W						R./W			R/W		
Reset	-			0	00000						0000			000		

Set this register for analog circuit configuration controls.

CMV The register field is used to control common voltage in BBTX mixed-signal module. It is coded in 2's complement, that is, with maximum 3 and minimum –4.

CALBIAS The register field is for control of biasing current in BBTX mixed-signal module. It is coded in 2's complement. That is, its maximum is 7 and minimum is –8. Biasing current in BBTX mixed-signal module has impact on performance of D/A conversion. Larger the value of the register field, the larger the biasing current in BBTX mixed-signal module.

CALRCCNT Parameter for calibration process of smoothing filter in BBTX mixed-signal module. Default value is '22'. Note that it is **NOT** coded in 2's complement. Therefore the range of its value is from 0 to 31. Remember to set it to 0x16 before BBTX calibration process if clock sent to BBTX is 26mhz. Otherwise set to 0xb if clock is 13mhz. It only needs to be set once.

FLOAT The register field is used to have the outputs of DAC in BBTX mixed-signal module float or not.

CALRCOUT After calibration processing for smoothing filter in BBTX mixed-signal module, a set of 3-bit value is obtained. It is coded in 2's complement.Bit	15	14	13	12	11	10	9	8	7	6	5	4	3	2	1	0

IWIT
嚴發機密不得洩漏
MTK CONFIDENTIAL
NO DISCLOSURE
IWIT

MTK Confidential A (機密)

Name				DCCOARSEQ	DCCOARSEI	DAC_PTR	DWAEN		COARSE	CALRCAUTOL	CALRCOPEN
Type	R/W	R/W	R/W	R/W	R/W	R/W	R/W	R/W	R/W	R/W	R/W
Reset	0	0	0	00	0	0000	0	0	0	0	0

Set this register for analog circuit configuration controls.

CALRCOPEN The register field is used to control normal Mode(close loop) or debug mode (open loop) for BBTX comparator in mixed signal

0 normal Mode (close loop)

1 debug Mode (open Loop)

CALRCAUTO The register field is used to control the result of calibration process of smoothing filter can automatically load to control the smoothing filter or not.

0 Not auto load, need manual load (default)

1 Auto load

COARSE The register field is used to control the central nominal value of BBTX DAC output

00 central nominal @ 1V

01 central nominal @ 1V –0.2V

10 reserved

11 central nominal @ 1V +0.2V

DWAEN The register field is used to turn on the DWA scheme of the BBTX DAC,

0 DWA scheme off (default)

1 DWA scheme on

DACPTR The register field is used to configured the staring pointer of 1 hot pulling of LSB[7:0] signal to BBTX DAC, range from 0~7. There is two different configuration. For DWAEN = 0, pointer always starts from the configuration value (e.g. if DACPTR = 3'b1, 1 hot will start pulling from LSB[1]). However, for DWAEN=1, the initial starting pointer will follow the configuration, while the pointer will move to most significant 1 hot pointer + 1 from the last LSB[7:0] input. (e.g. if DACPTR = 3'b1,and LSB[7:0] maybe 8'b00001110, then the next starting poiter will starts from LSB[4].). Defulat value is 0h.

DCCOARSEI The register field is used to control the central nominal value of BBTX DAC for I channel offset

00 central nominal @ +0mV

01 central nominal @ +30mV

11 central nominal @ - 30mV

10 reserved

DCCOARSEQ The register field is used to control the central nominal value of BBTX DAC for Q channel offset

00 central nominal @ +0mV

01 central nominal @ +30mV

11 central nominal @ - 30mV

10 reserved

IWIT
聯發機密不得洩漏
MTK CONFIDENTIAL
NO DISCLOSURE
IWIT

MTK Confidential A (機密)

12.2.3 AFC DAC

MCU APB bus registers for AFC DAC are listed as follows.

MIXED+0500h AFC DAC Analog-Circuit Control Register AFC_AC_CON

Bit	15	14	13	12	11	10	9	8	7	6	5	4	3	2	1	0
Name								GAIN SEL				CALI				
Type								R/W				R/W				
Reset								0				0				

Set this register for analog circuit configuration controls. Please refer to analog functional specification for more details.

GAINSEL gain selection of output swing

0 3/4VDD

1 **Full** VDD

CALI biasing current control

12.2.4 APC DAC

MCU APB bus registers for APC DAC are listed as followings.

MIXED+0600h APC DAC Analog-Circuit Control Register APC_AC_CON

Bit	15	14	13	12	11	10	9	8	7	6	5	4	3	2	1	0
Name											BYP	CALI				
Type											R/W	R/W				
Reset											0	0				

Set this register for analog circuit configuration controls. Please refer to analog functional specification for more details.

BYP bypass output buffer

CALI biasing current control

12.2.5 Auxiliary ADC

MCU APB bus registers for AUX ADC are listed as followings.

MIXED+0700h Auxiliary ADC Analog-Circuit Control Register AUX_AC_CON

Bit	15	14	13	12	11	10	9	8	7	6	5	4	3	2	1	0
Name											GAIN EN	CALI				
Type											R/W	R/W				
Reset											0	0				

Set this register for analog circuit configuration controls. Please refer to analog functional specification for more details.

CALI Biasing current control

GAINEN Comparator switch enable signal.

IWIT 聯發機密不得洩漏 MTK CONFIDENTIAL NO DISCLOSURE IWIT

MTK Confidential A (機密)

12.2.6 Voice Front-end

MCU APB bus registers for speech are listed as followings.

MIXED+0100h AFE Voice Analog Gain Control Register AFE_VAG_CON

Bit	15	14	13	12	11	10	9	8	7	6	5	4	3	2	1	0
Name						VUPG				VDPG0						
Type						R/W				R/W						
Reset						0000				0000						

Set this register for analog PGA gains. VUPG is set for microphone input volume control. And VDPG0 and VDPG1 are set for two output volume controls

VUPG voice-band up-link PGA gain control bits. For VCFG[3] = 1, it is only valid for INPUT 1.

VCFG [3] ='0'		VCFG [3] ='1'	
VUPG [4:0]	Gain	VUPG [4:0]	Gain
11111	42 dB	XX111	-21dB
11110	40 dB	XX110	-18dB
11101	38 dB	XX101	-15dB
11100	36 dB	XX100	-12dB
11011	34 dB	XX011	-9dB
11010	32 dB	XX010	-6dB
11001	30 dB	XX001	-3dB
11000	28 dB	XX000	0dB
10111	26 dB		
10110	24 dB		
10101	22 dB		
10100	20 dB		
10011	18 dB		
10010	16 dB		
10001	14 dB		
10000	12 dB		
01111	10 dB		
01110	8 dB		
01101	6 dB		
01100	4 dB		
01011	2 dB		
01010	0 dB		
01001	-2 dB		
01000	-4 dB		
00111	-6 dB		
00110	-8 dB		

聯發機密不得洩漏
MTK CONFIDENTIAL
NO DISCLOSURE
IWIT

MTK Confidential A (機密)

00101	-10 dB		
00100	-12 dB		
00011	-14 dB		
00010	-16 dB		
00001	-18 dB		
00000	-20 dB		

VDPG0 voice-band down-link PGA0 gain control bits

VDPG0 [3:0]	Gain
1111	8dB
1110	6dB
1101	4dB
1100	2dB
1011	0dB
1010	-2dB
1001	-4dB
1000	-6dB
0111	-8dB
0110	-10dB
0101	-12dB
0100	-14dB
0011	-16dB
0010	-18dB
0001	-20dB
0000	-22dB

聯發機密不得洩漏
MTK CONFIDENTIAL
NO DISCLOSURE
IWIT

MIXED+0104h AFE Voice Analog-Circuit Control Register 0 AFE_VAC_CON0

Bit	15	14	13	12	11	10	9	8	7	6	5	4	3	2	1	0
Name	VDC_COUPLE	VMIC_SHORT	VMIC_VREF		VCFG						VDSEND0	VCALI				
Type	R/W	R/W	R/W		R/W						R/W	R/W				
Reset	0	0	00		00000						00	00000				

Set this register for analog circuit configuration controls.

VDC_COUPLE Selectively choose DC couple microphone sense.

- **0** Disable DC couple sense of microphone
- **1** Enable DC couple sense of microphone

VMIC_SHORT Selectively short AU_MICBIASP / AU_MICBIASN.

- **0** float MIC_BIASN and short it to MIC_BIASP when handsfree mode mic is plugged in

MTK Confidential A (機密)

1 short MIC_BIASN to ground when handsfree mode mic is plugged in. In this mode, differential mic has current leakage and cause power loss.

VMIC_VREF Tuning MICBIASP DC voltage.

00 1.9V
01 2.0V
10 2.1V
11 2.2V

VCFG[4] microphone biasing control

0 differential biasing
1 single-ended biasing

VCFG[3] gain mode control. This control register is only valid to input 1. Others can be amplification mode only.

0 amplification
1 attenuation

VCFG[2] coupling control

0 AC
1 DC

VCFG[1:0] input select control

00 input 0
01 input 1
10 FM
11 reserved

VDSEND0 single-ended configuration control for out0

VCALI biasing current control, in 2's complement format

IWIT
聯發機密不得洩漏
MTK CONFIDENTIAL

MIXED+0108h AFE Voice Analog-Circuit Control Register 1 AFE_VAC_CON1

Bit	15	14	13	12	11	10	9	8	7	6	5	4	3	2	1	0
Name	VUPOP_EN	VBIAS_EN	VOC_EN	VBG_CTRL			VIBOOT	VFLOAT	VRSDON						VADCINMODE	VDACINMODE
Type	R/W	R/W	R/W	R/W			R/W	R/W	R/W						R/W	R/W
Reset	0	0	0	000			1	0	0						0	0

NO DISCLOSURE

Set this register for analog circuit configuration controls. There are several loop back modes and test modes implemented for test purposes. Suggested value is 0280h.

VUPOP_EN de-pop noise enable

0: disable
1: enable

VBIAS_EN voice downlink buffer bias current control

0: normal bias current
1: increase bias current

VOC_EN voice downlink buffer over current protection

0: disable
1: enable

VBG_CTRL voice-band bandgap control

IWIT

MTK Confidential A (機密)

IBOOT voice downlink DAC bias current control

0: increase bias current
1: normal bias current

VFLOAT voice-band output driver float

0: normal operating mode
1: float mode

VRSDON voice-band redundant signed digit function on

0: 1-bit 2-level mode
1: 2-bit 3-level mode

VADCINMODE Voice-band ADC output mode.

0: normal operating mode
1: the ADC input from the DAC output

VDACINMODE Voice-band DAC input mode.

0: normal operating mode
1: the DAC input from the ADC output

MIXED+010Ch AFE Voice Analog Power Down Control Register

AFE_VAPDN_CON

Bit	15	14	13	12	11	10	9	8	7	6	5	4	3	2	1	0
Name											VPDN_BIAS	VPDN_LNA	VPDN_ADC	VPDN_DAC		VPDN_OUT0
Type											R/W	R/W	R/W	R/W		R/W
Reset											0	0	0	0		0

Set this register to power up analog blocks. 0: power down, 1: power up.

VPDN_BIAS bias block
VPDN_LNA low noise amplifier block
VPDN_ADC ADC block
VPDN_DAC DAC block
VPDN_OUT0 OUT0 buffer block

MIXED+0110h AFE Voice AGC Control Register

AFE_VAGC_CON

Bit	15	14	13	12	11	10	9	8	7	6	5	4	3	2	1	0
Name		AAGCEN	AGCTEST	RELNOIDURSEL		RELNOILEVSEL		FRELCKSEL		SRELCKSEL		ATTTHDCAL		ATTCKSEL	HYSTEREN	DAGCEN
Type		R/W	R/W	R/W		R/W		R/W		R/W		R/W		R/W	R/W	R/W
Reset		0	0	00		00		00		00		00		0	0	0

Set this register for analog circuit configuration controls. There are several loop back modes and test modes implemented for test purposes. Suggested value is 4dcfh.

DAGCEN Digital AGC function enable. The loop-back path of AGC comprises analog comparators and digital gain control circuitry. This control register is used to enable the digital gain control circuitry. For normal function, DAGCEN and AAGCEN shall be set to "1" to enable voice AGC function.

IWIT
瞬發機密不得洩漏
MTK CONFIDENTIAL
NO DISCLOSURE
IWIT

MTK Confidential A (機密)

HYSTEREN AGC hysteresis function enable

ATTCKSEL attack clock selection

0: 16 KHz
1: 32 KHz

ATTTHDCAL attack threshold calibration

SRELCKSEL release slow clock selection

00: 1000/512 Hz
01: 1000/256 Hz
10: 1000/128 Hz
11: 1000/64 Hz

FRELCKSEL release fast clock selection

00: 1000/64 Hz
01: 1000/32 Hz
10: 1000/16 Hz
11: 1000/8 Hz

RELNOILEVSEL release noise level selection

00: -8 dB
01: -14 dB
10: -20 dB
11: -26 dB

RELNOIDURSEL release noise duration selection

00: 64 ms
01: 32 ms
10: 16 ms
11: 8 ms, 32768/4096

AAGCEN Analog AGC function enable. This control bit is used to enable the comparators of AGC loop-back path.

IWIT
聯發機密不得洩漏
MTK CONFIDENTIAL
NO DISCLOSURE

12.2.7 Audio Front-end

MCU APB bus registers for audio are listed as followings.

MIXED+0200h AFE Audio Analog Gain Control Register AFE_AAG_CON

Bit	15	14	13	12	11	10	9	8	7	6	5	4	3	2	1	0
Name							AMUTER	AMUTEL	APGR				APGL			
Type							R/W	R/W	R/W				R/W			
Reset							0	0	0000				0000			

Set this register for analog PGA gains.

AMUTER audio PGA L-channel mute control
AMUTEL audio PGA R-channel mute control
APGR audio PGA R-channel gain control
APGL audio PGA L-channel gain control

APGR [3:0] / APGL [3:0]	Gain

IWIT

MTK Confidential A (機密)

1111	23dB
1110	20dB
1101	17dB
1100	14dB
1011	13dB
1010	8dB
1001	5dB
1000	2dB
0111	-1dB
0110	-4dB
0101	-7dB
0100	-10dB
0011	-13dB
0010	-16dB
0001	-19dB
0000	-22dB

IWIT
聯發機密不得洩漏

MIXED+0204h **AFE Audio Analog-Circuit Control Register** **AFE_AAC_CON**

Bit	15	14	13	12	11	10	9	8	7	6	5	4	3	2	1	0
Name			APRO_SC	ADEPOP		ABUFSELR			ABUFSELL			ACALI				
Type			R/W	R/W		R/W			R/W			R/W				
Reset			0	0		000			000			00000				

MTK CONFIDENTIAL

Set this register for analog circuit configuration controls.

APRO_SC Short circuit protection.

- **0** disable
- **1** enable

NO DISCLOSURE

ADEPOP De-POP noise.

- **0** disable
- **1** enable

ABUFSELR audio buffer R-channel input selection

- **000**: audio DAC R/L-channel output; stereo to mono
- **001**: audio DAC R-channel output
- **010**: voice DAC output
- **100**: external FM R/L-channel radio output, stereo to mono
- **101**: external FM R-channel radio output
- **OTHERS**: reserved.

ABUFSELL audio buffer L-channel input selection

- **000**: audio DAC R/L-channel output; stereo to mono
- **001**: audio DAC L-channel output

IWIT

MTK Confidential A (機密)

010: voice DAC output
100: external FM R/L-channel radio output, stereo to mono
101: external FM L-channel radio output
OTHERS: reserved.

ACALI audio bias current control, in 2's complement format

MIXED+0208h AFE Audio Analog Power Down Control Register — AFE_AAPDN_CON

Bit	15	14	13	12	11	10	9	8	7	6	5	4	3	2	1	0
Name												APDN_BIAS	APDN_DACR	APDN_DACL	APDN_OUTR	APDN_OUTL
Type												R/W	R/W	R/W	R/W	R/W
Reset												0	0	0	0	0

Set this register to power up analog blocks. 0: power down, 1: power up. Suggested value is 00ffh.

APDN_BIAS BIAS block
APDN_DACR R-channel DAC block
APDN_DACL L-channel DAC block
APDN_OUTR R-channel OUT buffer block
APDN_OUTL L-channel OUT buffer block

聯發機密不得洩漏

MIXED+020Ch Enhanced Audio Analog Front End Control & Parameters — AFE_AAC_NEW

Bit	15	14	13	12	11	10	9	8	7	6	5	4	3	2	1	0
Name								MIC_SHORT	BUF_BIAS		DAC_MODE	MUX		VCMBUF_EN	VCM_MODE	DC_COUPLE
Type								R/W	R/W		R/W	R/W		R/W	R/W	R/W
Reset								0	0		0			0	0	0

MT6225 ehnahced audio DAC application circuitry selection and control parameters.

MIC_SHORT Selectively short AU_MICBIASP and AU_MICBIASN. Useless.

BUF_BIAS Select buffer quasi-current.
- **00** Nominal bias current
- **01** Larger bias current
- **10** Smallest bias current
- **11** Smaller bias current

DAC_MODE Select two different DAC circuitry.
- **0** New DAC
- **1** Old DAC

MUX Mux audio DAC output to DM R/L pins.
- **00** FM input
- **01** FM input
- **10** Left channel DAC
- **11** Right channel O/P

VCMBUF_EN Enable DC couple VCM buffer.

MTK CONFIDENTIAL
NO DISCLOSURE
IWIT

MTK Confidential A (機密)

0 Disable VCM buffer

1 Enable VCM buffer

VCM_MODE Change common mode generation circuitry.

0 New VCM circuitry

1 Old VCM circuitry

DC_COUPLE Enable DC couple microphone sense. Useless.

0 Disable

1 Enable

IWIT

12.2.8 Reserved

Some registers are reserved for further extensions.

MIXED+0800h Reserved 0 Analog Circuit Control Register 0 — RES0_AC_CON 0

Bit	15	14	13	12	11	10	9	8	7	6	5	4	3	2	1	0
Name																
Type	R/W	R/W	R/W	R/W	R/W	R/W	R/W	R/W	R/W	R/W	R/W	R/W	R/W	R/W	R/W	R/W
Reset	0	0	0	0	0	0	0	0	0	0	0	0	0	0	0	0

聯發機密不得洩漏

MIXED+0804h Reserved 0 Analog Circuit Control Register 1 — RES0_AC_CON 1

Bit	15	14	13	12	11	10	9	8	7	6	5	4	3	2	1	0
Name																
Type	R/W	R/W	R/W	R/W	R/W	R/W	R/W	R/W	R/W	R/W	R/W	R/W	R/W	R/W	R/W	R/W
Reset	0	0	0	0	0	0	0	0	0	0	0	0	0	0	0	0

MTK CONFIDENTIAL

MIXED+0900h Reserved 1 Analog Circuit Control Register 0 — RES1_AC_CON 0

Bit	15	14	13	12	11	10	9	8	7	6	5	4	3	2	1	0
Name																
Type	R/W	R/W	R/W	R/W	R/W	R/W	R/W	R/W	R/W	R/W	R/W	R/W	R/W	R/W	R/W	R/W
Reset	0	0	0	0	0	0	0	0	0	0	0	0	0	0	0	0

NO DISCLOSURE

MIXED+0904h Reserved 1 Analog Circuit Control Register 1 — RES1_AC_CON 1

Bit	15	14	13	12	11	10	9	8	7	6	5	4	3	2	1	0
Name																
Type	R/W	R/W	R/W	R/W	R/W	R/W	R/W	R/W	R/W	R/W	R/W	R/W	R/W	R/W	R/W	R/W
Reset	0	0	0	0	0	0	0	0	0	0	0	0	0	0	0	0

IWIT

MIXED+0A00h Reserved 2 Analog Circuit Control Register 0 — RES2_AC_CON 0

Bit	15	14	13	12	11	10	9	8	7	6	5	4	3	2	1	0
Name																
Type	R/W	R/W	R/W	R/W	R/W	R/W	R/W	R/W	R/W	R/W	R/W	R/W	R/W	R/W	R/W	R/W
Reset	0	0	0	0	0	0	0	0	0	0	0	0	0	0	0	0

MTK Confidential A (機密)

MIXED+0A04h Reserved 2 Analog Circuit Control Register 1 — RES2_AC_CON1

Bit	15	14	13	12	11	10	9	8	7	6	5	4	3	2	1	0
Name																
Type	R/W	R/W	R/W	R/W	R/W	R/W	R/W	R/W	R/W	R/W	R/W	R/W	R/W	R/W	R/W	R/W
Reset	0	0	0	0	0	0	0	0	0	0	0	0	0	0	0	0

MIXED+0B00h Reserved 3 Analog Circuit Control Register 0 — RES3_AC_CON0

Bit	15	14	13	12	11	10	9	8	7	6	5	4	3	2	1	0
Name																
Type	R/W	R/W	R/W	R/W	R/W	R/W	R/W	R/W	R/W	R/W	R/W	R/W	R/W	R/W	R/W	R/W
Reset	0	0	0	0	0	0	0	0	0	0	0	0	0	0	0	0

MIXED+0B04h Reserved 3 Analog Circuit Control Register 1 — RES3_AC_CON1

Bit	15	14	13	12	11	10	9	8	7	6	5	4	3	2	1	0
Name																
Type	R/W	R/W	R/W	R/W	R/W	R/W	R/W	R/W	R/W	R/W	R/W	R/W	R/W	R/W	R/W	R/W
Reset	0	0	0	0	0	0	0	0	0	0	0	0	0	0	0	0

MIXED+0C00h Reserved 4 Analog Circuit Control Register 0 — RES4_AC_CON0

Bit	15	14	13	12	11	10	9	8	7	6	5	4	3	2	1	0
Name																
Type	R/W	R/W	R/W	R/W	R/W	R/W	R/W	R/W	R/W	R/W	R/W	R/W	R/W	R/W	R/W	R/W
Reset	0	0	0	0	0	0	0	0	0	0	0	0	0	0	0	0

MIXED+0C04h Reserved 4 Analog Circuit Control Register 1 — RES4_AC_CON1

Bit	15	14	13	12	11	10	9	8	7	6	5	4	3	2	1	0
Name																
Type	R/W	R/W	R/W	R/W	R/W	R/W	R/W	R/W	R/W	R/W	R/W	R/W	R/W	R/W	R/W	R/W
Reset	0	0	0	0	0	0	0	0	0	0	0	0	0	0	0	0

MIXED+0D00h Reserved 5 Analog Circuit Control Register 0 — RES5_AC_CON0

Bit	15	14	13	12	11	10	9	8	7	6	5	4	3	2	1	0
Name																
Type	R/W	R/W	R/W	R/W	R/W	R/W	R/W	R/W	R/W	R/W	R/W	R/W	R/W	R/W	R/W	R/W
Reset	0	0	0	0	0	0	0	0	0	0	0	0	0	0	0	0

MIXED+0D04h Reserved 5 Analog Circuit Control Register 1 — RES5_AC_CON1

Bit	15	14	13	12	11	10	9	8	7	6	5	4	3	2	1	0
Name																

聯發科技密不得洩漏
MTK CONFIDENTIAL
NO DISCLOSURE

MTK Confidential A (機密)

Type	R/W	R/W	R/W	R/W	R/W	R/W	R/W	R/W	R/W	R/W	R/W	R/W	R/W	R/W	R/W	R/W
Reset	0	0	0	0	0	0	0	0	0	0	0	0	0	0	0	0

MIXED+0E00h Reserved 6 Analog Circuit Control Register 0 RES6_AC_CON0

Bit	15	14	13	12	11	10	9	8	7	6	5	4	3	2	1	0
Name																
Type	R/W	R/W	R/W	R/W	R/W	R/W	R/W	R/W	R/W	R/W	R/W	R/W	R/W	R/W	R/W	R/W
Reset	0	0	0	0	0	0	0	0	0	0	0	0	0	0	0	0

MIXED+0E04h Reserved 6 Analog Circuit Control Register 1 RES6_AC_CON1

Bit	15	14	13	12	11	10	9	8	7	6	5	4	3	2	1	0
Name																
Type	R/W	R/W	R/W	R/W	R/W	R/W	R/W	R/W	R/W	R/W	R/W	R/W	R/W	R/W	R/W	R/W
Reset	0	0	0	0	0	0	0	0	0	0	0	0	0	0	0	0

MIXED+0F00h Reserved 7 Analog Circuit Control Register 0 RES7_AC_CON0

Bit	15	14	13	12	11	10	9	8	7	6	5	4	3	2	1	0
Name																
Type	R/W	R/W	R/W	R/W	R/W	R/W	R/W	R/W	R/W	R/W	R/W	R/W	R/W	R/W	R/W	R/W
Reset	0	0	0	0	0	0	0	0	0	0	0	0	0	0	0	0

MIXED+0F04h Reserved 7 Analog Circuit Control Register 1 RES7_AC_CON1

Bit	15	14	13	12	11	10	9	8	7	6	5	4	3	2	1	0
Name																
Type	R/W	R/W	R/W	R/W	R/W	R/W	R/W	R/W	R/W	R/W	R/W	R/W	R/W	R/W	R/W	R/W
Reset	0	0	0	0	0	0	0	0	0	0	0	0	0	0	0	0

聯發機密不得洩漏
MTK CONFIDENTIAL

12.3 Programming Guide

12.3.1 BBRX Register Setup

NO DISCLOSURE

The register used to control analog base-band receiver is BBRX_AC_CON.

12.3.1.1 Programmable Biasing Current

To maximize the yield in modern digital process, the receiver features providing 5-bit 32-level programmable current to bias internal analog blocks. The 5-bits registers CALBIAS [4:0] is coded with 2's complement format.

12.3.1.2 Offset / Gain Calibration

The base-band downlink receiver (RX), together with the base-band uplink transmitter (TX) introduced in the next section, provides necessary analog hardware for DSP algorithm to correct the mismatch and offset error. The connection for measurement of both RX/TX mismatch and gain error is shown in **Figure** 106, and the corresponding calibration procedure is described below.

IWIT

MTK Confidential A (機密)

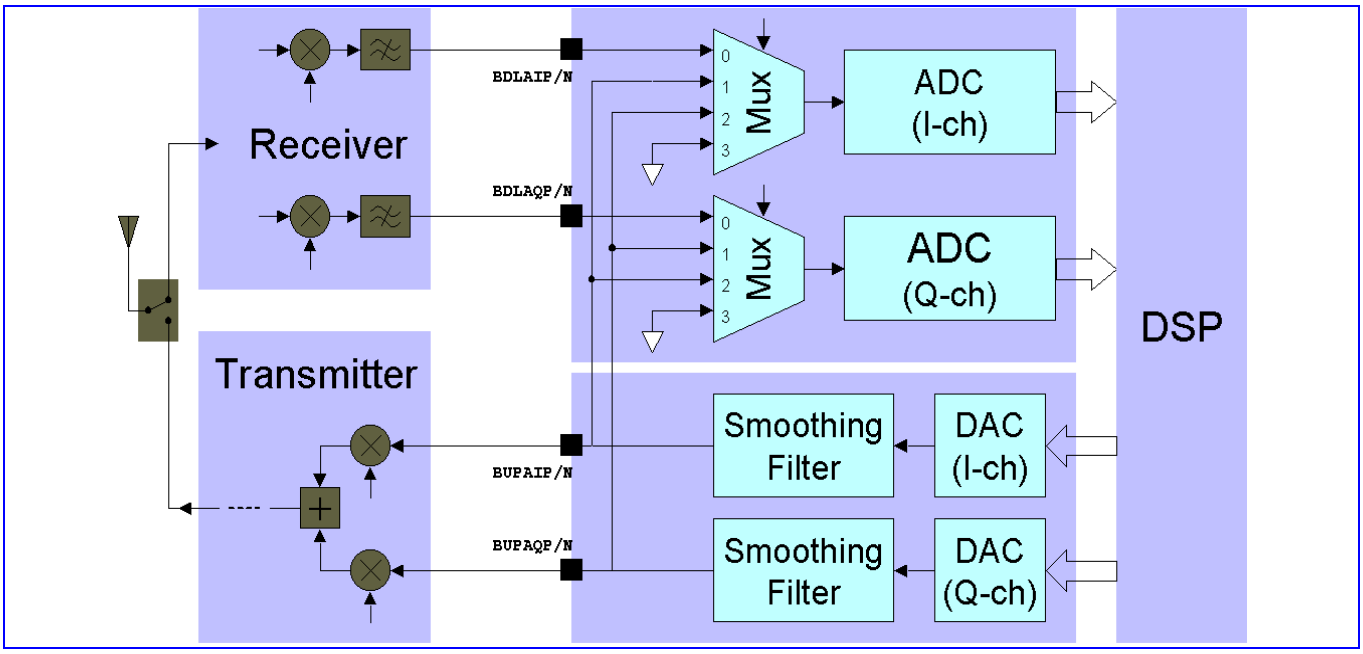

Figure 106 Base-band A/D and D/A Offset and Gain Calibration

聯發機密不得洩漏

12.3.1.3 Downlink RX Offset Error Calibration

The RX offset measurement is achieved by selecting grounded input to A/D converter (set ISEL [1:0] ='11' and QSEL [1:0] ='11' to select channel 3 of the analog input multiplexer, as shown in **Figure** 107. The output of the ADC is sent to DSP for further offset cancellation. The offset cancellation accuracy depends on the number of samples being converted. That is, more accurate measurement can be obtained by collecting more samples followed by averaging algorithm.

MTK CONFIDENTIAL

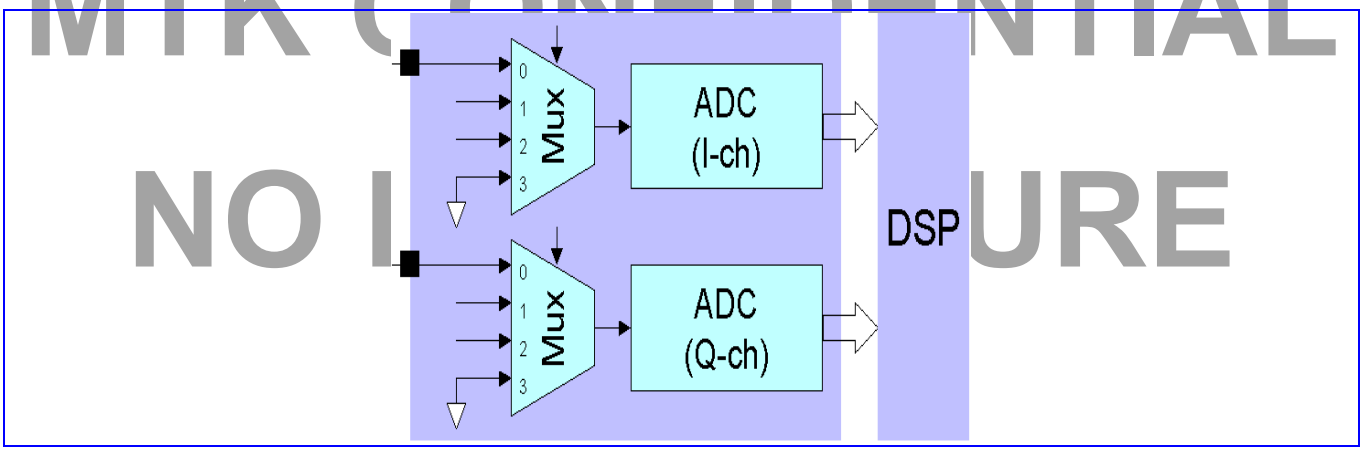

NO LEAKAGE

Figure 107 Downlink ADC Offset Error Measurement

12.3.1.4 Downlink RX and Uplink TX Gain Error Calibration

To measure the gain mismatch error, both I/Q uplink TXs should be programmed to produce full-scale pure sinusoidal waves output. Such signals are then fed to downlink RX for A/D conversion, in the following two steps.

IWIT

A. The uplink I-channel output are connected to the downlink I-channel input, and the uplink Q-channel output are connected to the downlink Q-channel input. This can be achieved by setting ISEL [1:0] ='01' and QSEL [1:0] ='01' (shown in **Figure** 108 (A)).

B. The uplink I-channel output are then connected to the downlink Q-channel input, and the uplink Q-channel output are connected to the downlink I-channel input. This can be achieved by setting ISEL [1:0] ='10' and QSEL [1:0] ='10' (shown in **Figure** 108 (B)).

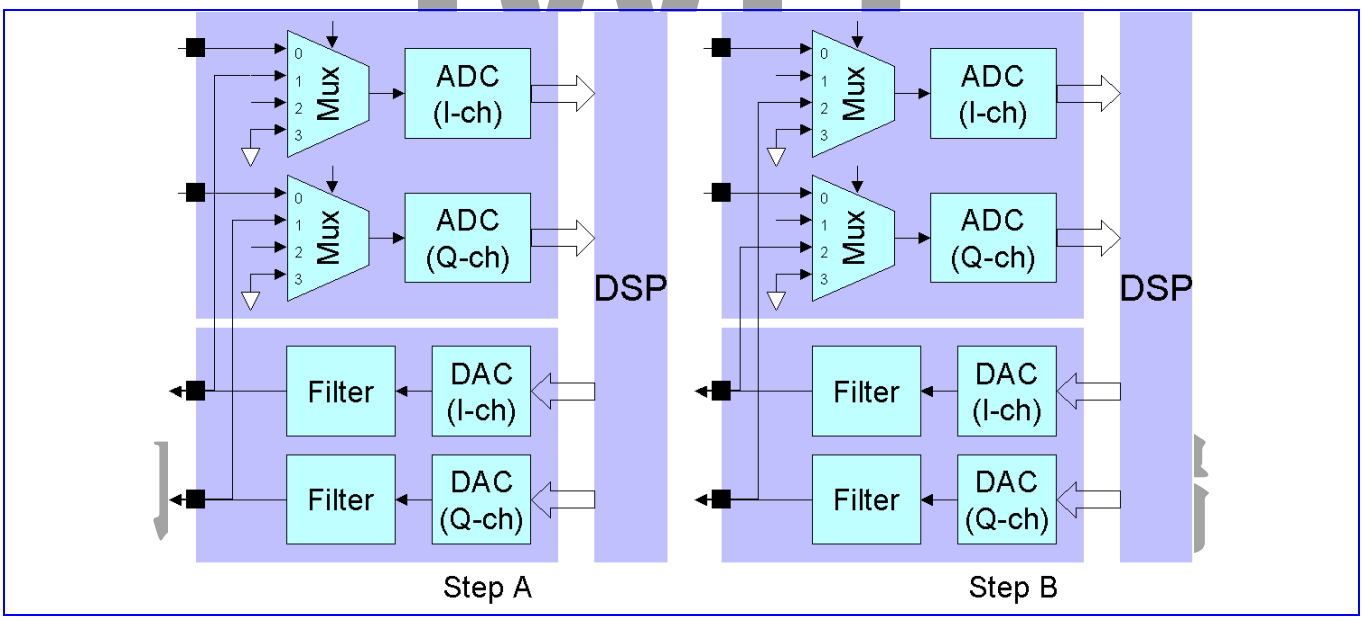

Figure 108 Downlink RX and Up-link TX Gain Mismatch Measurement (A) I/Q TX connect to I/Q RX (B) I/Q TX connect to Q/I RX

Once above successive procedures are completed, RX/TX gain mismatch could be easily obtained because the amplitude mismatch on RX digitized result in step A and B is the sum and difference of RX and TX gain mismatch, respectively.

The gain error of the downlink RX can be corrected in the DSP section and the uplink TX gain error can be corrected by the gain trimming facility that TX block provide.

12.3.1.5 Uplink TX Offset Error Calibration

Once the offset of the downlink RX is known and corrected, the offset of the uplink TX alone could be easily estimated. The offset error of TX should be corrected in the digital domain by means of the programmable feature of the digital GMSK modulator.

Finally, it is important that above three calibration procedures should be exercised in order, that is, correct the RX offset first, then RX/TX gain mismatch, and finally TX offset. This is owing to that analog gain calibration in TX will affect its offset, while the digital offset correction has no effect on gain.

12.3.2 BBTX Register Setup

The register used to control analog base-band transmitter is BBTX_AC_CON0 and BBTX_AC_CON1.

MTK CONFIDENTIAL
NO DISCLOSURE

MTK Confidential A (機密)

12.3.2.1 Output Gain Control

The output swing of the uplink transmitter is controlled by register GAIN [2:0] coded in 2's complement with about 2dB step. When TRIMI [3:0] / TRIMQ [3:0] = 0 the swing is listed in **Table** 66, defined to be the difference between positive and negative output signal.

GAIN [2:0]	Output Swing	For AVDD=2.8 (V)
+3 (011)	AVDD*0.900 (+6.02 dB)	2.52
+2 (010)	AVDD*0.720 (+4.08 dB)	2.02
+1 (001)	AVDD*0.576 (+2.14 dB)	1.61
+0 (000)	AVDD*0.450 (+0.00 dB)	1.26
-1 (111)	AVDD*0.360 (-1.94 dB)	1
-2 (110)	AVDD*0.288 (-3.88 dB)	0.81
-3 (101)	AVDD*0.225 (-6.02 dB)	0.63
-4 (100)	AVDD*0.180 (-7.95 dB)	0.5

Table 66 Output Swing Control Table

聯發機密不得洩漏

12.3.2.2 Output Gain Trimming

I/Q channels can also be trimmed separately to compensate gain mismatch in the base-band transmitter or the whole transmission path including RF module. The gain trimming is adjusted in 16 steps spread from –1.18dB to +1.18dB (**Table** 67), compared to the full-scale range set by GAIN [2:0].

MTK CONFIDENTIAL
NO DISCLOSURE

TRIMI [3:0] / TRIMQ [3:0]	Gain Step (dB)
+7 (0111)	1.18
+6 (0110)	1.00
+5 (0101)	0.83
+4 (0100)	0.66
+3 (0011)	0.49
+2 (0010)	0.32
+1 (0001)	0.16
+0 (0000)	0.00
-1 (1111)	-0.16
-2 (1110)	-0.31
-3 (1101)	-0.46
-4 (1100)	-0.61
-5 (1011)	-0.75
-6 (1010)	-0.90
-7 (1001)	-1.04

MTK Confidential A (機密)

-8 (1000)	-1.18

Table 67 Gain Trimming Control Table

12.3.2.3 Output Common-Mode Voltage

The output common-mode voltage is controlled by CMV [2:0] with about 0.08*AVDD step, as listed in the following table.

CMV [2:0]	Common-Mode Voltage
+3 (011)	AVDD*0.62
+2 (010)	AVDD*0.58
+1 (001)	AVDD*0.54
+0 (000)	AVDD*0.50
-1 (111)	AVDD*0.46
-2 (110)	AVDD*0.42
-3 (101)	AVDD*0.38
-4 (100)	AVDD*0.34

Table 68 Output Common-Mode Voltage Control Table

聯發機密不得洩漏

12.3.2.4 Programmable Biasing Current

The transmitter features providing 5-bit 32-level programmable current to bias internal analog blocks. The 5-bits registers CALBIAS [4:0] is coded with 2's complement format.

12.3.2.5 Smoothing Filter Characteristic

MTK CONFIDENTIAL

The 2nd –order Butterworth smoothing filter is used to suppress the image at DAC output: it provides more than 40dB attenuation at the 4.44MHz sampling frequency. To tackle with the digital process component variation, programmable cutoff frequency control bits CALRCSEL [2:0] are included. User can directly change the filter cut-off frequency by different CALRCSEL value (coded with 2's complement format and with a default value 0). In addition, an internal calibration process is provided, by setting START CALRC to high and CALRCCNT to an appropriate value (default is 11). After the calibration process, the filter cut-off frequency is calibrated to 350kHz +/- 50 kHz and a new CALRCOUT value is stored in the register. During the calibration process, the output of the cell is high-impedance.

NO DISCLOSURE

12.3.3 AFC-DAC Register Setup

The register used to control the APC DAC is AFC_AC_CON, which providing 5-bit 32-level programmable current to bias internal analog blocks. The 5-bits registers CALI [4:0] is coded with 2's complement format.

12.3.4 APC-DAC Register Setup

The register used to control the APC DAC is AFC_AC_CON, which providing 5-bit 32-level programmable current to bias internal analog blocks. The 5-bits registers CALI [4:0] is coded with 2's complement format.

12.3.5 Auxiliary A/D Conversion Register Setup

The register used to control the Aux-ADC is AUX_AC_CON. For this register, which providing 5-bit 32-level

MTK Confidential A (機密)

programmable current to bias internal analog blocks. The 5-bits registers CALI [4:0] is coded with 2's complement format.

12.3.6 Voice-band Blocks Register Setup

The registers used to control AMB are AFE_VAG_CON, AFE_VAC_CON0, AFE_VAC_CON1, and AFE_VAPDN_CON. For these registers, please refer to chapter "Analog Chip Interface"

12.3.6.1 Reference Circuit

The voice-band blocks include internal bias circuits, a differential bandgap voltage reference circuit and a differential microphone bias circuit. Internal bias current could be calibrated by varying VCALI[4:0] (coded with 2's complement format).

The differential bandgap circuit generates a low temperature dependent voltage for internal use. For proper operation, there should be an external 47nF capacitor connected between differential output pins AU_VREFP and AU_VREFN. The bandgap voltage (~1.24V[6], typical) also defines the dBm0 reference level through out the audio mixed-signal blocks**.** The following table illustrates typical 0dBm0 voltage when uplink/downlink programmable gains are unity. For other gain setting, 0dBm0 reference level should be scaled accordingly.

Symbol	Parameter	Min	Typical	Max	Unit
$V_{0dBm0,UP}$	0dBm0 Voltage for Uplink Path, Applied Differentially Between Positive and Negative Microphone Input Pins		0.2V		V-rms
$V_{0dBm0,Dn}$	0dBm0 voltage for Downlink Path, Appeared Differentially Between Positive and Negative Power Amplifier Output Pins		0.6V		V-rms

Table 69 0dBm0 reference level for unity uplink/downlink gain

The microphone bias circuit generates a differential output voltage between AU_MICBIAS_P and AU_MICBIAS_N for external electret type microphone. Typical output voltage is 1.9 V. In singled-ended mode, by set VCFG[3] =1, AU_MICBIAS_N is pull down while output voltage is present on AU_MICBIAS_P, respect to ground. The max current supplied by microphone bias circuit is 2mA.

12.3.6.2 Uplink Path

Uplink path of voice-band blocks includes an uplink programmable gain amplifier and a sigma-delta modulator.

12.3.6.2.1 Uplink Programmable Gain Amplifier

Input to the PGA is a multiplexer controlled by VCFG [3:0], as described in the following table. In normal operation, both input AC and DC coupling are feasible for attenuation the input signal (gain <= 0dB). However, only AC coupling is suggested if amplification of input signal is desired (gain>=0dB).

[6] The bandgap voltage could be calibrated by adjusting control signal VBG_CTRL[1:0]. Its default value is [00]. VBG_CTRL not only adjust the bandgap voltage but also vary its temperature dependence. Optimal value of VBG_CTRL is to be determined.

聯發機密不得洩漏
MTK CONFIDENTIAL
NO DISCLOSURE
IWIT

MTK Confidential A (機密)

Control Signal	Function	Descriptions
VCFG [0]	Input Selector	0: Input 0 (From AU_VIN0_P / AU_VIN0_N) Is Selected 1: Input 1 (From AU_VIN1_P / AU_VIN1_N) Is Selected
VCFG [1]	Coupling Mode	0: AC Coupling 1: DC Coupling
VCFG [2]	Gain Mode	0: Amplification Mode (gain >= 0 dB) 1: Attenuation Mode (gain <= 0dB)
VCFG [3]	Microphone Biasing	0: Differential Biasing (Take Bias Voltage Between AU_MICBIAS_P and AU_MICBIAS_N) 1: Signal-Ended Biasing (Take Bias Voltage From AU_MICBIAS_P Respected to Ground. AU_MICBIAS_N Is Connected to Ground)

Table 70 Uplink PGA input configuration setting

The PGA itself provides programmable gain (through VUPG [3:0]) with step of 3dB, as listed in the following table.

VCFG [2] ='0'		VCFG [2] ='1'	
VUPG [3:0]	Gain	VUPG [3:0]	Gain
1111	NA	X111	-21dB
1110	42dB	X110	-18dB
1101	39dB	X101	-15dB
1100	36dB	X100	-12dB
1011	33dB	X011	-9dB
1010	30dB	X010	-6dB
1001	27dB	X001	-3dB
1000	24dB	X000	0dB
0111	21dB		
0110	18dB		
0101	15dB		
0100	12dB		
0011	9dB		
0010	6dB		
0001	3dB		
0000	0dB		

Table 71 Uplink PGA gain setting (VUPG [3:0])

The following table illustrates typically the 0dBm0 voltage applied at the microphone inputs, differentially, for several gain settings.

VCFG [2] ='0'		VCFG [2] ='1'	
VUPG [3:0]	0dBm0 (V-rms)	VUPG [3:0]	0dBm0 (V-rms)
1100	3.17mV	X110	1.59V

聯發機密不得洩漏
MTK CONFIDENTIAL
NO DISCLOSURE
IWIT
IWIT

MTK Confidential A (機密)

1000	12.6mV	X100	0.8V
0100	50.2mV	X010	0.4V
0000	0.2V	X000	0.2V

Table 72 0dBm0 voltage at microphone input pins

IWIT

12.3.6.2.2 Sigma-Delta Modulator

Analog-to-digital conversion in uplink path is made with a second-order sigma-delta modulator (SDM) whose sampling rate is 4096kHz. Output signals are coded in either one-bit or RSD format, optionally controlled by VRSDON register.

For test purpose, one can set VADCINMODE to HI to form a look-back path from downlink DAC output to SDM input. The default value of VADCINMODE is zero.

12.3.6.3 Downlink Path

Downlink path of voice-band blocks includes a digital to analog converter (DAC) and two programmable output power amplifiers.

12.3.6.3.1 Digital to Analog Converter

The DAC converts input bit-stream to analog signal by sampling rate of 4096kHz. . Besides, it performs a 2nd-order 40kHz butterworth filtering. The DAC receives input signals from MT6228 DSP by set VDACINMODE = 0. It can also take inputs from SDM output by setting VDACINMODE = 1.

聯發機密不得洩漏

12.3.6.3.2 Downlink Programmable Power Amplifier

Voice-band analog blocks include two identical output power amplifiers with programmable gain. Amplifier 0 and amplifier 1 can be configured to either differential or single-ended mode by adjusting VDSEND [0] and VDSEND [1], respectively. In single-ended mode, when VDSEND[0] =1, output signal is present at AU_VOUT0_P pin respect to ground. Same as VDSEND[1] for AU_VOUT1_P pin.

MTK CONFIDENTIAL

For the amplifier itself, programmable gain setting is described in the following table.

NO DISCLOSURE

VDPG0 [3:0] / VDPG1 [3:0]	Gain
1111	8dB
1110	6dB
1101	4dB
1100	2dB
1011	0dB
1010	-2dB
1001	-4dB
1000	-6dB
0111	-8dB
0110	-10dB
0101	-12dB
0100	-14dB

IWIT

MTK Confidential A (機密)

0011	-16dB
0010	-18dB
0001	-20dB
0000	-22dB

Table 73 Downlink power amplifier gain setting

Control signal VFLOAT, when set to 'HI', is used to make output nodes totally floating in power down mode. If VFLOAT is set to 'LOW" in power down mode, there will be a resistor of 50k ohm (typical) between AU_VOUT0_P and AU_VOUT0_N, as well as between AU_VOUT0_P and AU_VOUT0_N.

The amplifiers deliver signal power to drive external earphone. The minimum resistive load is 28 ohm and the upper limit of the output current is 50mA. On the basis that 3.14dBm0 digital input signal into downlink path produces DAC output differential voltage of 0.87V-rms (typical), the following table illustrates the power amplifier output signal level (in V-rms) and signal power for an external 32 ohm resistive load.

VDPG	Output Signal Level (V-rms)	Output Signal Power (mW / dBm)
0010	0.11	0.37/-4.3
0110	0.27	2.28/3.6
1010	0.69	14.8/11.7
1110	1.74	94.6/19.8

Table 74 Output signal level/power for 3.14dBm0 input. External resistive load = 32 ohm

The following table illustrates the output signal level and power for different resistive load when VDPG =1110.

RLOAD	Output Signal Level (V-rms)	Output Signal Power (mW / dBm)
30	1.74	101/20
100	1.74	30.3/14.8
600	1.74	5/7

Table 75 Output signal level/power for 3.14dBm0 input, VDPG =1110

12.3.6.4 Power Down Control

Each block inside audio mixed-signal blocks features dedicated power-down control, as illustrated in the following table.

Control Signal	Descriptions
VPDN_BIAS	Power Down Reference Circuits (Active Low)
VPDN_LNA	Power Down Uplink PGA (Active Low)
VPDN_ADC	Power Down Uplink SDM (Active Low)
VPDN_DAC	Power Down DAC (Active Low)
VPDN_OUT0	Power Down Downlink Power Amp 0 (Active Low)

聯發機密不得洩漏
MTK CONFIDENTIAL
NO DISCLOSURE
IWIT

MTK Confidential A (機密)

VPDN_OUT1	Power Down Downlink Power Amp 1 (Active Low)

Table 76 Voice-band blocks power down control

12.3.7 Audio-band Blocks Register Setup

The registers used to control audio blocks are AFE_AAG_CON, AFE_AAC_CON, and AFE_AAPDN_CON. For these registers, please refer to chapter "Analog Chip Interface"

12.3.7.1 Output Gain Control

Audio blocks include stereo audio DACs and programmable output power amplifiers. The DACs convert input bit-stream to analog signal by sampling rate of Fs*128 where Fs could be 32kHz, 44.1kHz, or 48kHz. Besides, it performs a 2nd-order butterworth filtering. The two identical output power amplifiers with programmable gain are designed to driving external AC-coupled single-end speaker. The minimum resistor load is 16 ohm and the maximum driving current is 50mA. The programmable gain setting, controlled by APGR[] and APGL[], is the same as that of the voice-band amplifiers.

Unlike voice signals, 0dBFS defines the full-scale audio signals amplitude. Based on bandgap reference voltage again, the following table illustrates the power amplifier output signal level (in V-rms) and signal power for an external 16 ohm resistive load.

APGR[]/ APGL[]	Output Signal Level (V-rms)	Output Signal Power (mW / dBm)
0010	0.055	0.19/-7.2
0110	0.135	1.14/0.6
1010	0.345	7.44/8.7
1110	0.87	47.3/16.7

Table 77 Output signal level/power for 0dBFS input. External resistive load = 16 ohm

12.3.7.2 Mute Function and Power Down Control

By setting AMUTER (AMUTEL) to high, right (Left) channel output will be muted.

Each block inside audio mixed-signal blocks features dedicated power-down control, as illustrated in the following table.

Control Signal	Descriptions
APDN_BIAS	Power Down Reference Circuits (Active Low)
APDN_DACL	Power Down L-Channel DAC (Active Low)
APDN_DACR	Power Down R-Channel DAC (Active Low)
APDN_OUTL	Power Down L-Channel Audio Amplifier (Active Low)
APDN_OUTR	Power Down R-Channel Audio Amplifier (Active Low)

Table 78 Audio-band blocks power down control

聯發機密不得洩漏
MTK CONFIDENTIAL
NO DISCLOSURE
IWIT
IWIT

12.3.8 Multiplexers for Audio and Voice Amplifiers

The audio/voice amplifiers feature accepting signals from various signal sources including AU_FMINR/AU_FMINL pins, that aimed to receive stereo AM/FM signal from external radio chip:

1) Voice-band amplifier 0 accepts signals from voice DAC output only.
2) Voice-band amplifier 1 accepts signal from either voice DAC, audio DAC, or AM/FM radio input pins (controlled by register VBUF1SEL[]). For the last two cases, left and right channel signals will be summed together to form a mono signal first.
3) Audio left/right channel amplifiers receive signals from either voice DAC, audio DAC, or AM/FM radio input pins (controlled by registers ABUFSELL[] and ABUFSELR[]), too. Left and right channel amplifiers will produce identical output waveforms when receiving mono signals from voice DAC.

12.3.9 Preferred Microphone and Earphone Connections

In this section, preferred microphone and earphone connections are discussed.

Differential connection of microphone is shown below. This is the preferred method to obtain the possible best performance. C1 and Rin form an AC coupling and high-pass network. C1*Rin should be chosen such that the in-band signal will not be attenuated too much. For differential minimum resistance of 13k ohm, minimum value of C1 is 170nF for less than 1dB attenuation at 300Hz. R2 is determined by microphone sensitivity. C2 and R2 form another low-pass filter to filtering noise coming from microphone bias pins. Pole frequency less than 50Hz is recommended.

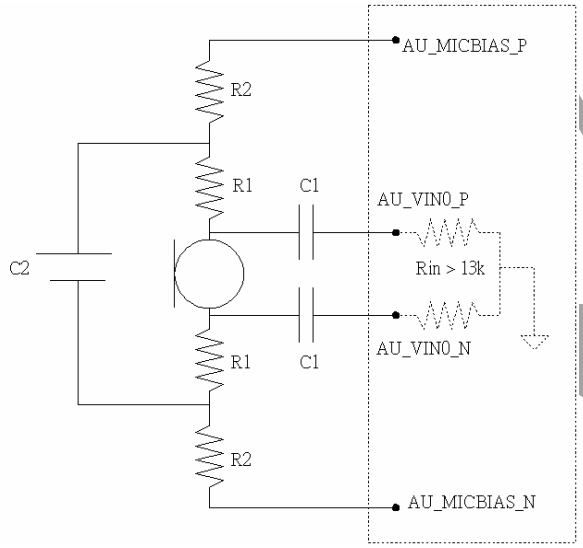

Figure 6 Differential Microphone Connection

For reference, single-ended connection method of microphone is shown below. R1 and R3 are chosen based on microphone sensitivity requirement. C1 and Rin form an AC coupling and high-pass network. R2 and C2 constitute a low-pass network for filtering out noise from microphone bias pins.

MTK Confidential A (機密)
IWIT
聯發機密不得洩漏
MTK CONFIDENTIAL
NOT FOR PUBLIC DISCLOSURE
IWIT

MTK Confidential A (機密)

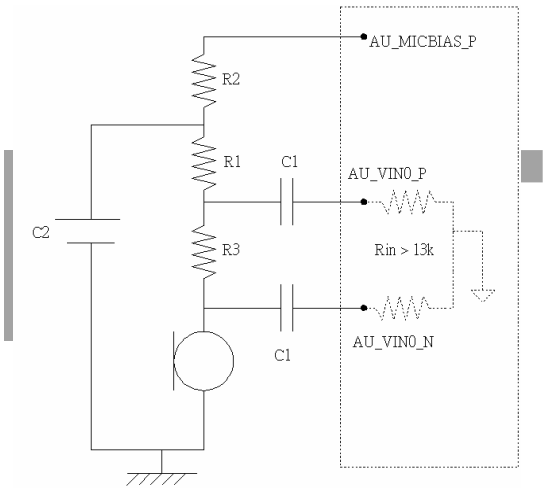

Figure 7 Single-ended Microphone Connection

For earphone, both differential and single-ended connections can be used. Advantage of differential connection includes lower cost and better click-noise immunity. For single-ended connection, an additional AC-coupling capacitor is necessary to not provide DC voltage to earphone. The high-pass cut-off frequency formed by AC-coupling capacitor and earphone equivalent load should be low enough (e.g. < 300 Hz).

聯發機密不得洩漏

12.3.10 Clock Squarer Register Setup

The register used to control clock squarer is CLK_CON. For this register, please refer to chapter "Clocks"

CLKSQ_PLD is used to bypass the clock squarer.

MTK CONFIDENTIAL

12.3.11 Phase-Locked Loop Register Setup

For registers control the PLL, please refer to chapter "Clocks" and "Software Power Down Control"

12.3.11.1 Frequency Setup

The DSP/MCU PLL itself could be programmable to output either 52MHz or 78MHz clocks. Accompanied with additional digital dividers, 13/26/39/52/65/78 MHz clock outputs are supported.

NO DISCLOSURE

12.3.11.2 Programmable Biasing Current

The PLLs feature providing 5-bit 32-level programmable current to bias internal analog blocks. The 5-bits registers CALI [4:0] is coded with 2's complement format.

12.3.12 32-khz Crystal Oscillator Register Setup

IWIT

For registers that control the oscillator, please refer to chapter "Real Time Clock" and "Software Power Down Control".

XOSCCALI[4:0] is the calibration control registers of the bias current, and is coded with 2's complement format.

[1] CL is the parallel combination of C1 and C2 in the block diagram.

MTK Confidential A (機密)

13 Digital Pin Electrical Characteristics

- **Based on I/O power supply (VDD33) = 3.3 V**
- **Vil (max) = 0.8 V**
- **Vih (min) = 2.0 V**

Ball 12x12	Name	Dir	Driving Iol & Ioh Typ (mA)	Vol at Iol Max (V)	Voh at Ioh Min (V)	PU/PD Resistor			Pull	Cin (pF)
						Min	Typ	Max		
			JTAG Port							
C2	**JTRST#**	I				40K	75K	190K	PD	5.2
D2	**JTCK**	I				40K	75K	190K	PU	5.2
D3	**JTDI**	I				40K	75K	190K	PU	5.2
E1	**JTMS**	I				40K	75K	190K	PU	5.2
E2	**JTDO**	O	4	0.4	2.4					
F1	**JRTCK**	O	4	0.4	2.4					
			RF Parallel Control Unit							
E3	**BPI_BUS0**	O	2/8	0.4	2.4					
E4	**BPI_BUS1**	O	2/8	0.4	2.4					
F2	**BPI_BUS2**	O	2/8	0.4	2.4					
F3	**BPI_BUS3**	O	2/8	0.4	2.4					
F4	**BPI_BUS4**	O	2	0.4	2.4					
F5	**BPI_BUS5**	O	2	0.4	2.4					
F6	**BPI_BUS6**	IO	2	0.4	2.4	40K	75K	190K	PD	5.2
G5	**BPI_BUS7**	IO	2	0.4	2.4	40K	75K	190K	PD	5.2
G4	**BPI_BUS8**	IO	2	0.4	2.4	40K	75K	190K	PD	5.2
G3	**BPI_BUS9**	IO	2	0.4	2.4	40K	75K	190K	PD	5.2
			RF Serial Control Unit							
G2	**BSI_CS0**	O	2	0.4	2.4					
G1	**BSI_DATA**	O	2	0.4	2.4					
H1	**BSI_CLK**	O	2	0.4	2.4					
			Serial LCD/PM IC Interface							
H2	LSCK	IO	2/4/6/8	0.4	2.4	40K	75K	190K	PU	5.2
H3	LSA0	IO	2/4/6/8	0.4	2.4	40K	75K	190K	PU	5.2
H4	LSDA	IO	2/4/6/8	0.4	2.4	40K	75K	190K	PU	5.2
J1	LSCE0#	IO	2/4/6/8	0.4	2.4	40K	75K	190K	PU	5.2
J2	LSCE1#	IO	2/4/6/8	0.4	2.4	40K	75K	190K	PU	5.2
			Parallel LCD/NAND-Flash Interface							
J3	LPCE1#	IO	2/4/6/8	0.4	2.4	40K	75K	190K	PU	5.2
J4	**LPCE0#**	O	2/4/6/8	0.4	2.4					
K1	**LRST#**	O	2/4/6/8	0.4	2.4					
K2	**LRD#**	O	2/4/6/8	0.4	2.4					
K3	**LPA0**	O	2/4/6/8	0.4	2.4					
K4	**LWR#**	O	2/4/6/8	0.4	2.4					
K5	NLD17	IO	2/4/6/8	0.4	2.4	40K	75K	190K	PD	5.2
L5	NLD16	IO	2/4/6/8	0.4	2.4	40K	75K	190K	PD	5.2
L4	**NLD15**	IO	2/4/6/8	0.4	2.4	40K	75K	190K	PD	5.2
L3	**NLD14**	IO	2/4/6/8	0.4	2.4	40K	75K	190K	PD	5.2

IWIT 聯發機密不得洩漏 MTK CONFIDENTIAL NO DISCLOSURE IWIT

MTK Confidential A (機密)

L2	**NDL13**	IO	2/4/6/8	0.4	2.4	40K	75K	190K	PD	5.2
L1	**NLD12**	IO	2/4/6/8	0.4	2.4	40K	75K	190K	PD	5.2
M5	**NLD11**	IO	2/4/6/8	0.4	2.4	40K	75K	190K	PD	5.2
M4	**NLD10**	IO	2/4/6/8	0.4	2.4	40K	75K	190K	PD	5.2
M3	**NLD9**	IO	2/4/6/8	0.4	2.4	40K	75K	190K	PD	5.2
M2	**NLD8**	IO	2/4/6/8	0.4	2.4	40K	75K	190K	PD	5.2
M1	**NLD7**	IO	2/4/6/8	0.4	2.4	40K	75K	190K	PD	5.2
N4	**NLD6**	IO	2/4/6/8	0.4	2.4	40K	75K	190K	PD	5.2
N3	**NLD5**	IO	2/4/6/8	0.4	2.4	40K	75K	190K	PD	5.2
N2	**NLD4**	IO	2/4/6/8	0.4	2.4	40K	75K	190K	PD	5.2
N1	**NLD3**	IO	2/4/6/8	0.4	2.4	40K	75K	190K	PD	5.2
P4	**NLD2**	IO	2/4/6/8	0.4	2.4	40K	75K	190K	PD	5.2
P3	**NLD1**	IO	2/4/6/8	0.4	2.4	40K	75K	190K	PD	5.2
P2	**NLD0**	IO	2/4/6/8	0.4	2.4	40K	75K	190K	PD	5.2
P1	**NRNB**	IO	4	0.4	2.4	40K	75K	190K	PU	5.2
R4	**NCLE**	IO	4	0.4	2.4	40K	75K	190K	PD	5.2
R2	**NALE**	IO	4	0.4	2.4	40K	75K	190K	PD	5.2
R1	**NWE#**	IO	4	0.4	2.4	40K	75K	190K	PU	5.2
T1	**NRE#**	IO	4	0.4	2.4	40K	75K	190K	PU	5.2
U1	**NCE#**	IO	4	0.4	2.4	40K	75K	190K	PU	5.2
			SIM Card Interface							
K14	**SIMRST**	O	2	0.4	2.4					
J17	**SIMCLK**	O	2	0.4	2.4					
J16	**SIMVCC**	O	2	0.4	2.4					
J15	SIMSEL	IO	2	0.4	2.4	40K	75K	190K	PD	5.2
J14	**SIMDATA**	IO	2	0.4	2.4					5.2
			Dedicated GPIO Interface							
T3	**GPIO0**	IO	2	0.4	2.4	40K	75K	190K	PU	5.2
U4	**GPIO1**	IO	2	0.4	2.4	40K	75K	190K	PU	5.2
T4	**GPIO2**	IO	2	0.4	2.4	40K	75K	190K	PU	5.2
U5	**GPIO3**	IO	2	0.4	2.4	40K	75K	190K	PU	5.2
G13	**GPIO4**	IO	4	0.4	2.4	40K	75K	190K	PU	5.2
F13	**GPIO5**	IO	4	0.4	2.4	40K	75K	190K	PD	5.2
D13	**GPIO6**	IO	4	0.4	2.4	40K	75K	190K	PD	5.2
D14	**GPIO7**	IO	4	0.4	2.4	40K	75K	190K	PD	5.2
B16	**GPIO8**	IO	4	0.4	2.4	40K	75K	190K	PU	5.2
A16	**GPIO9**	IO	4	0.4	2.4	40K	75K	190K	PU	5.2
			Miscellaneous							
U3	**SYSRST#**	I								5.2
K8	**WATCHDOG#**	O	4	0.4	2.4					
U2	**SRCLKENA**	O	2	0.4	2.4					
T2	SRCLKENAI	IO	2	0.4	2.4	40K	75K	190K	PD	5.2
			Keypad Interface							
G15	**KCOL4**	I				40K	75K	190K	PU	5.2
G14	**KCOL3**	I				40K	75K	190K	PU	5.2
F17	**KCOL2**	I				40K	75K	190K	PU	5.2
F16	**KCOL1**	I				40K	75K	190K	PU	5.2
F15	**KCOL0**	I				40K	75K	190K	PU	5.2

IWI
聯發機密不得洩漏
MTK CONFIDENTIAL
NO DISCLOSURE
IWI

MTK Confidential A (機密)

F14	**KROW5**	O	2	0.4	2.4					
E17	**KROW4**	O	2	0.4	2.4					
E16	**KROW3**	O	2	0.4	2.4					
E15	**KROW2**	O	2	0.4	2.4					
E14	**KROW1**	O	2	0.4	2.4					
D17	**KROW0**	O	2	0.4	2.4					
			External Interrupt Interface							
T5	**EINT0**	I				40K	75K	190K	PU	5.2
R5	**EINT1**	I				40K	75K	190K	PU	5.2
P5	**EINT2**	I				40K	75K	190K	PU	5.2
U6	**EINT3**	I				40K	75K	190K	PU	5.2
			External Memory Interface							
M14	**ED0**	IO	2~16	0.4	2.4					5.2
M15	**ED1**	IO	2~16	0.4	2.4					5.2
M16	**ED2**	IO	2~16	0.4	2.4					5.2
M17	**ED3**	IO	2~16	0.4	2.4					5.2
N14	**ED4**	IO	2~16	0.4	2.4					5.2
N15	**ED5**	IO	2~16	0.4	2.4					5.2
N16	**ED6**	IO	2~16	0.4	2.4					5.2
N17	**ED7**	IO	2~16	0.4	2.4					5.2
P15	**ED8**	IO	2~16	0.4	2.4					5.2
P16	**ED9**	IO	2~16	0.4	2.4					5.2
P17	**ED10**	IO	2~16	0.4	2.4					5.2
R16	**ED11**	IO	2~16	0.4	2.4					5.2
R17	**ED12**	IO	2~16	0.4	2.4					5.2
T17	**ED13**	IO	2~16	0.4	2.4					5.2
U17	**ED14**	IO	2~16	0.4	2.4					5.2
T16	**ED15**	IO	2~16	0.4	2.4					5.2
R14	**ERD#**	O	2~16	0.4	2.4					
P13	**EWR#**	O	2~16	0.4	2.4					
R13	**ECS0#**	O	2~16	0.4	2.4					
T15	**ECS1#**	O	2~16	0.4	2.4					
T14	**ECS2#**	O	2~16	0.4	2.4					
U16	**ELB#**	O	2~16	0.4	2.4					
P14	**EUB#**	O	2~16	0.4	2.4					
N12	**EPDN#**	O	2	0.4	2.4					
R12	**EADV#**	O	2~16	0.4	2.4					
T12	**EWAIT**	I				40K	75K	190K	PU	5.2
P12	**ECLK**	O	2~16	0.4	2.4					
U14	**ERAS#**	O	2~16	0.4	2.4					
U15	**ECAS#**	O	2~16	0.4	2.4					
U13	**ECKE**	O	2~16	0.4	2.4					
T13	**EDCLK**	O	2~16	0.4	2.4					
U12	**EA1**	O	2~16	0.4	2.4					
N11	**EA2**	O	2~16	0.4	2.4					
P11	**EA3**	O	2~16	0.4	2.4					
R11	**EA4**	O	2~16	0.4	2.4					
T11	**EA5**	O	2~16	0.4	2.4					
U11	**EA6**	O	2~16	0.4	2.4					

IWIT
聯發機密不得洩漏
MTK CONFIDENTIAL
NO DISCLOSURE
IWIT

MTK Confidential A (機密)

P10	**EA7**	O	2~16	0.4	2.4					
R10	**EA8**	O	2~16	0.4	2.4					
T10	**EA9**	O	2~16	0.4	2.4					
U10	**EA10**	O	2~16	0.4	2.4					
P9	**EA11**	O	2~16	0.4	2.4					
R9	**EA12**	O	2~16	0.4	2.4					
T9	**EA13**	O	2~16	0.4	2.4					
U9	**EA14**	O	2~16	0.4	2.4					
P8	**EA15**	O	2~16	0.4	2.4					
R8	**EA16**	O	2~16	0.4	2.4					
T8	**EA17**	O	2~16	0.4	2.4					
U8	**EA18**	O	2~16	0.4	2.4					
P7	**EA19**	O	2~16	0.4	2.4					
R7	**EA20**	O	2~16	0.4	2.4					
T7	**EA21**	O	2~16	0.4	2.4					
U7	**EA22**	O	2~16	0.4	2.4					
P6	**EA23**	O	2~16	0.4	2.4					
R6	**EA24**	O	2~16	0.4	2.4					
T6	**EA25**	O	2~16	0.4	2.4					
			Memory Card Interface							
M13	**MCCM0**	IO	4~16	0.4	2.4	40K	75K	190K	PU/PD	5.2
L14	**MCDA0**	IO	4~16	0.4	2.4	40K	75K	190K	PU/PD	5.2
L15	**MCDA1**	IO	4~16	0.4	2.4	40K	75K	190K	PU/PD	5.2
L16	**MCDA2**	IO	4~16	0.4	2.4	40K	75K	190K	PU/PD	5.2
L17	**MCDA3**	IO	4~16	0.4	2.4	40K	75K	190K	PU/PD	5.2
K17	**MCCK**	O	4~16	0.4	2.4					
K16	**MCWP**	IO	2	0.4	2.4	40K	75K	190K	PU	5.2
K15	**MCINS**	IO	2	0.4	2.4	40K	75K	190K	PU	5.2
			UART/IrDA Interface							
H17	**URXD1**	I				40K	75K	190K	PU	5.2
H16	**UTXD1**	O	2	0.4	2.4					
H15	URXD2	IO	2	0.4	2.4	40K	75K	190K	PU	5.2
H14	UTXD2	IO	2	0.4	2.4	40K	75K	190K	PU	5.2
G17	URXD3	IO	2	0.4	2.4	40K	75K	190K	PU	5.2
G16	UTXD3	IO	2	0.4	2.4	40K	75K	190K	PU	5.2
			Digital Audio Interface							
D16	DAICLK	IO	4	0.4	2.4	40K	75K	190K	PU	5.2
D15	DAIPCMOUT	IO	4	0.4	2.4	40K	75K	190K	PD	5.2
C17	DAIPCMIN	IO	4	0.4	2.4	40K	75K	190K	PU	5.2
C16	DAISYNC	IO	4	0.4	2.4	40K	75K	190K	PU	5.2
			Image Sensor Interface							
C15	CMRST	IO	2	0.4	2.4	40K	75K	190K	PD	5.2
B15	CMPDN	IO	2	0.4	2.4	40K	75K	190K	PD	5.2
A15	**CMVREF**	I				40K	75K	190K	PU/PD	5.2
C14	**CMHREF**	I				40K	75K	190K	PU/PD	5.2
A17	**CMPCLK**	I				40K	75K	190K	PD	5.2
B17	**CMMCLK**	O	2~16	0.4	2.4	40K	75K	190K	PD	
B14	**CMDAT7**	IO	2	0.4	2.4	40K	75K	190K	PD	5.2

IWIT
聯發機密不得洩漏
MTK CONFIDENTIA
NO DISCLOSURE
IWIT

MTK Confidential A (機密)

A14	**CMDAT6**	IO	2	0.4	2.4	40K	75K	190K	PD	5.2
C13	**CMDAT5**	IO	2	0.4	2.4	40K	75K	190K	PD	5.2
B13	**CMDAT4**	IO	2	0.4	2.4	40K	75K	190K	PD	5.2
A13	**CMDAT3**	IO	2	0.4	2.4	40K	75K	190K	PD	5.2
D12	**CMDAT2**	IO	2	0.4	2.4	40K	75K	190K	PD	5.2
C12	CMDAT1	IO	2	0.4	2.4	40K	75K	190K	PD	5.2
B12	CMDAT0	IO	2	0.4	2.4	40K	75K	190K	PD	5.2

IWIT

聯發機密不得洩漏

MTK CONFIDENTIAL

NO DISCLOSURE

IWIT