MT6252 GSM/GPRS Baseband Processor Data Sheet

Version: 1.0

Release date: 2011-01-25

MediaTek Confidential Release for Cenon WCX

© 2010 - 2011 MediaTek Inc.

This document contains information that is proprietary to MediaTek Inc.

Unauthorized reproduction or disclosure of this information in whole or in part is strictly prohibited.

Specifications are subject to change without notice.

Revision History

Revision	Date	Comments
1.0	Jan 21, 2011	Initial Version

MediaTek Confidential Release for Cenon WCX

MediaTek Confidential Release for Cenon WCX

This document contains information that is proprietary to MediaTek Inc.

Unauthorized reproduction or disclosure of this information in whole or in part is strictly prohibited.

TABLE OF CONTENTS

Revision History 2

Preface 4

1 System Overview 5
- 1.1 Platform Features 8
- 1.2 Modem Features 9
- 1.3 Multimedia Features 11
- 1.4 General Description 12

2 Product Description 13
- 2.1 Pin Description 13
- 2.2 Electrical Characteristics 40
- 2.3 System Configurations 43
- 2.4 Power-on Sequence 44
- 2.5 Analog Baseband 47
- 2.6 PMU 54
- 2.7 GSM/GPRS RF 70
- 2.8 Package Information 79
- 2.9 Ordering Information 82

3 Micro-Controller Unit Subsystem 83
- 3.1 Direct Memory Access 85
- 3.2 Interrupt Controller 112

4 Microcontroller Peripherals 133
- 4.1 Pulse-Width Modulation Outputs 133
- 4.2 SIM Interface 137
- 4.3 Keypad Scanner 153
- 4.4 General Purpose Inputs/Outputs 159
- 4.5 General Purpose Timer 211
- 4.6 UART 217
- 4.7 Real Time Clock 242
- 4.8 Auxiliary ADC Unit 253
- 4.9 I2C / SCCB Controller 262
- 4.10 USB Device Controller 277
- 4.11 SD/MMC Memory Card Controller 292

5 Multi-Media Subsystem 321
- 5.1 LCD Interface 321
- 5.2 Camera Interface 379

6 Analog Front-end & Analog Blocks 394
- 6.1 General Description 394
- 6.2 ABB Register Definitions 406
- 6.3 PMU Registers Definition 440
- 6.4 Programming Guide 498

MediaTek Confidential Release for Cenon WCX

This document contains information that is proprietary to MediaTek Inc.

Unauthorized reproduction or disclosure of this information in whole or in part is strictly prohibited.

Preface

Acronym for Register Type

R/W	Capable of both read and write access
RO	Read only
RC	Read only. After reading the register bank, each bit which is HIGH(1) will be cleared to LOW(0) automatically.
WO	Write only
W1S	Write only. When writing data bits to register bank, each bit which is HIGH(1) will cause the corresponding bit to be set to 1. Data bits which are LOW(0) have no effect on the corresponding bit.
W1C	Write only. When writing data bits to register bank, each bit which is HIGH(1) will cause the corresponding bit to be cleared to 0. Data bits which are LOW(0) have no effect on the corresponding bit.

MediaTek Confidential Release for Cenon WCX

MediaTek Confidential Release for Cenon WCX

This document contains information that is proprietary to MediaTek Inc.

Unauthorized reproduction or disclosure of this information in whole or in part is strictly prohibited.

1 System Overview

MT6252 is a GSM/GPRS handset chip solution which integrates RF, analog baseband, digital baseband as well as Power Management Unit (PMU) and can greatly reduce the component count and make a smaller PCB size. Besides, MT6252 is capable of Single Antenna Interference Cancellation (SAIC) and AMR speech. Based on a 32-bit ARM7EJ-S™ RISC processor, MT6252 provides an unprecedented platform with high quality modem performance. The typical application diagram is shown as in **Figure 1**.

Platform

MT6252 has the ARM7EJ-S™ RISC processor running at up to 104 MHz, which provides best trade-off between system performance and power consumption.

For large amount of data transfer, high performance Direct Memory Access (DMA) is implemented, which greatly enhances the data movement speed while reducing MCU processing load.

Memory

MT6252 supports serial Flash interface with various operating frequencies.

Multimedia

MT6252 multimedia system contains many hardware accelerators to enrich user experience, including the camera interface, display controller/resizer/rotator, etc.

MT6252 utilizes high resolution audio DAC, digital audio, and audio synthesis technology to provide superior audio features; e.g. MP3 ring tones.

Connectivity and Storage

MT6252 supports UART as well as a Bluetooth interface. Also, it is embedded with necessary peripheral blocks: keypad scanner with the capability to detect the multiple key presses, multiple-SIM controller, real time clock, PWM, LCD controller, USB 1.1 FS/LS, MMC/SD and general purpose programmable I/Os.

MT6252 supports USB download with battery.

Audio

Using a highly integrated mixed-signal Audio Front-End architecture, MT6252 allows easy audio interfacing with direct connection to the audio transducers. The audio interface integrates D/A and A/D converters for the voice band, as well as high resolution stereo D/A converters for the audio band. In addition, MT6252 provides stereo input and analog mux, and supports the AMR codec to optimize speech and audio quality.

The 700 mW class-AB amplifier is also embedded to save the BOM cost without having to adopt an external amplifier.

Radio

MediaTek Confidential Release for Cenon WCX

This document contains information that is proprietary to MediaTek Inc.

Unauthorized reproduction or disclosure of this information in whole or in part is strictly prohibited.

MT6252 integrates a mixed-signal baseband front-end in order to provide a radio interface with flexibility for efficient customization. It builds in gain /offset calibration mechanisms and filters with programmable coefficients for comprehensive compatibility control on RF modules. MT6252 achieves great MODEM performance by utilizing a high resolution A/D converter in the RF downlink path.

MT6252 RF is a low current transceiver to support a true quad-band GSM/GPRS cellular system. The highly integrated RF system implements the high sensitivity and channel selection receiver, high precision transmission modulator, low phase noise frequency synthesizer, and the digitally controlled crystal oscillator. The external components required for a GPRS radio design include the Rx SAWs, PA, switchplexer, X'TAL, and a few passives.

Debug Function

The JTAG interface enables in-circuit debugging of software program with the ARM7EJ-S™ core. With this standardized debugging interface, MT6252 provides developers with a wide set of options in choosing ARM development kits from different third party vendors.

Low Power Features

MT6252 offers various low power features to reduce system power consumption. Features include Pause Mode of 32 kHz clocking at Standby State, Power Down Mode for individual peripherals, and Processor Sleep Mode. In addition, MT6252 is also fabricated using the advanced low leakage CMOS process, in order to provide an ultra low leakage solution.

Power Management

MT6252 integrates all regulators that a voice-centric phone needs, including thirteen LDOs optimized for specific GSM/GPRS baseband sub-systems. In addition to Li-Ion battery charge function, MT6252 are equipped with a SIM-level shifter interface, one open-drain output switch controlling the KPLED and one LDO specifically driving the vibrator motor. MT6252's power management schemes also cover thermal overload protection, Under-voltage Lock-out protection (UVLO), over-voltage protection, and the power-on reset/start-up timer, etc.

Package

The MT6252 device is offered in an 11.6 mm×12.1 mm, 305-ball, 0.5 mm staggered pin pitch TFBGA package.

MediaTek Confidential Release for Cenon WCX
MediaTek Confidential Release for Cenon WCX

This document contains information that is proprietary to MediaTek Inc.

Unauthorized reproduction or disclosure of this information in whole or in part is strictly prohibited.

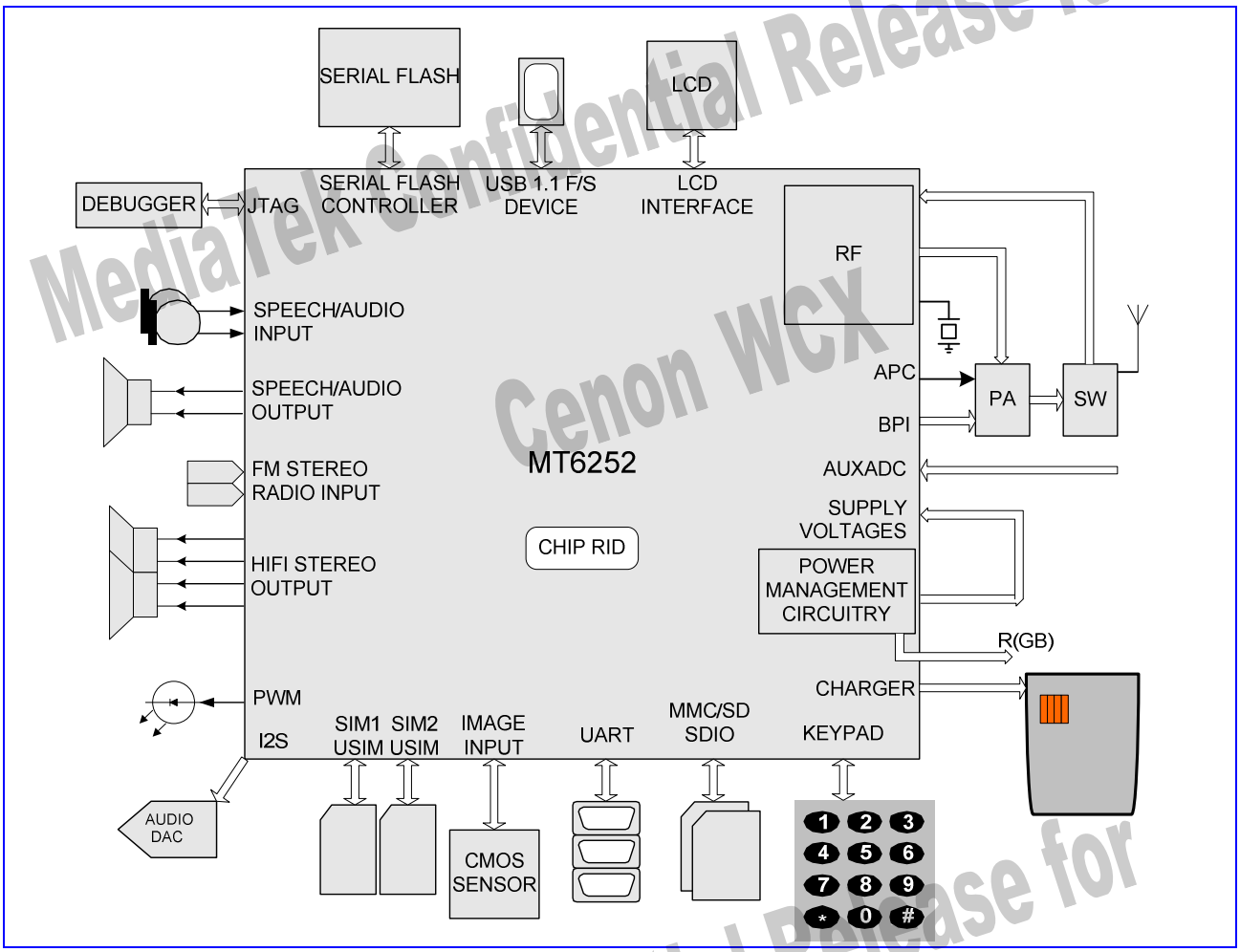

Figure 1 Key applications of MT6252

MediaTek Confidential Release for Cenon WCX

This document contains information that is proprietary to MediaTek Inc.

Unauthorized reproduction or disclosure of this information in whole or in part is strictly prohibited.

1.1 Platform Features

General

- Integrated voice-band, audio-band and baseband analog front ends
- 11.6 mm×12.1 mm, 305-ball, 0.5 mm pitch TFBGA package

MCU Subsystem

- ARM7EJ-S 32-bit RISC processor
- High performance multi-layer AMBA bus
- Java hardware acceleration for fast Java-based games and applets
- Operating frequency: 104 MHz
- On-chip boot ROM for factory Flash programming
- Watchdog timer for system crash recovery
- 4 sets of General Purpose Timers
- Circuit switch data coprocessor
- Division coprocessor
- Frame check sequence coprocessor

Serial Flash Interfaces

- Supports various operating frequency combinations for Serial Flash
- Supports QPI and SPI Serial Flash

User Interfaces

- 8-row × 8-column keypad controller with a hardware scanner
- Supports multiple key presses for gaming
- SIM/USIM controller with hardware T=0/T=1 protocol control
- Real Time Clock (RTC) operating with a separate power supply
- General Purpose I/Os (GPIOs)
- 1 set of Pulse Width Modulation (PWM) output
- Maximum 7 external interrupt lines

Security

- Supports the security key and chip random ID

Connectivity

- Three sets of UARTs with hardware flow control and speed of up to 921600 bps
- FS/LS USB 1.1 device controller
- Multimedia Card/Secure Digital Memory Card
- DAI/PCM and I2S interface for audio applications

MediaTek Confidential Release for Cenon WCX
MediaTek Confidential Release for Cenon WCX

This document contains information that is proprietary to MediaTek Inc.

Unauthorized reproduction or disclosure of this information in whole or in part is strictly prohibited.

Low Power Schemes

- Power Down Mode for analog and digital circuits
- Processor Sleep Mode
- Pause Mode of 32 kHz clocking at Standby State
- 2-channel auxiliary 10-bit A/D converter for application usage other than battery monitoring

Power and Supply Management

- Charger Input up to 8 V
- Thirteen sets of LDOs optimized for specific GSM sub-systems
- Built-in LDO for RF transceiver
- High operation efficiency and low standby current
- Li-Ion battery charge function
- Multi- SIM Card Interface
- Four open-drain output current regulators to supply/control the LED
- LDO-type vibrator
- One NMOS switch to control R(GB) LED
- Thermal Overload Protection
- Under-voltage Lock-out Protection
- Over-voltage Protection

- Test and Debug
- Built-in digital and analog loop back modes for both audio and baseband front-ends
- DAI port complying with GSM Rec.11.10

1.2 Modem Features

Integrated RF Receiver

- Quad-band differential input LNAs
- Quadrature RF mixers
- Fully integrated channel filter

Integrated RF Transmitter

- Precise transmission modulator
- Low noise SAWLESS transmitter

Integrated RF Frequency Synthesizer

- Programmable fractional-N synthesizer
- Integrated VCO
- Integrated loop filter
- Fast settling time suitable for multi-slot GPRS applications

Integrated Digitally controlled Crystal Oscillator (DCXO)

MediaTek Confidential Release for Cenon WCX
MediaTek Confidential Release for Cenon WCX

This document contains information that is proprietary to MediaTek Inc.

Unauthorized reproduction or disclosure of this information in whole or in part is strictly prohibited.

- 26 MHz crystal oscillator
- On-chip programmable capacitor array for coarse tuning
- On-chip programmable capacitor array for fine-tuning

Radio Interface and Baseband Front Ends

- High resolution A/D converter for downlink baseband I and Q signals
- Calibration mechanism of offset and gain mismatch from analog baseband
- 10-bit D/A Converter for automatic power control
- Programmable radio Rx filter with adaptive bandwidth control
- Dedicated Rx filter for FB acquisition
- Baseband Parallel Interface (BPI) with programmable driving strength
- Multi-band support

Voice and Modem Codec

- Dial tone generation
- Voice memo
- Noise reduction
- Echo suppression
- Advanced Sidetone Oscillation Reduction
- Digital sidetone generator with programmable gain
- Two programmable acoustic compensation filters
- GSM/GPRS quad vocoders for adaptive multirate (AMR), enhanced full rate (EFR), full rate (FR) and half rate (HR)
- GSM channel coding, equalization and A5/1, A5/2 and A5/3 ciphering
- GPRS GEA1, GEA2 and GEA3 ciphering
- Programmable GSM/GPRS modem
- GSM Circuit Switch Data
- GPRS Class 12

Voice Interface and Voice Front End

- Two microphone inputs sharing one low noise amplifier with programmable gain and automatic gain control (AGC) mechanism
- Voice power amplifier with programmable gain
- A/D Converter for voice uplink path
- D/A Converter for voice downlink path
- Supports half-duplex hands-free operation
- Compliant with GSM 03.50

MediaTek Confidential Release for Cenon WCX
MediaTek Confidential Release for Cenon WCX

This document contains information that is proprietary to MediaTek Inc.

Unauthorized reproduction or disclosure of this information in whole or in part is strictly prohibited.

1.3 Multimedia Features

LCD Interface

- Supports an 8-/9-bit parallel interface
- Supports a serial interface

LCD Controller

- Supports LCD module with a maximum resolution up to 240x320 at 16 bpp
- Capable of combining display memories with up to 4 blending layers
- Supports hardware dithering function
- Supports hardware display rotation on each layer

Camera Interface

- Supports YUV422/RGB565 sensor interface

Multimedia Data Path

- Supports hardware source accumulation scaling function
- Supports hardware rotation function

Audio Codec

- Wavetable synthesis with up to 64 tones
- Advanced wavetable synthesizer capable of generating simulated stereo
- Wavetable including GM full set of 128 instruments and 47 sets of percussions
- PCM Playback and Record
- Digital Audio Playback

Audio Interface and Audio Front End

- Supports the I2S interface
- High resolution D/A converters for stereo audio playback
- Stereo analog input for stereo audio source
- Analog multiplexer for stereo audio
- FM radio recording
- Stereo-to-Mono conversion

MediaTek Confidential Release for Cenon WCX
MediaTek Confidential Release for Cenon WCX

This document contains information that is proprietary to MediaTek Inc.

Unauthorized reproduction or disclosure of this information in whole or in part is strictly prohibited.

1.4 General Description

Based on a dual-processor architecture, MT6252 integrates both an ARM7EJ-S core and digital signal processor cores. ARM7EJ-S is the main processor running the 2G and 2.5G protocol software. Digital signal processors are used to implement the MODEM algorithms as well as advanced audio functions. Except for some mixed-signal circuitries, the other building blocks in MT6252 are connected to either the microcontroller or one of the digital signal processors.

MT6252 consists of the following subsystems:

- Highly integrated RF transceiver for multi-band GSM and GPRS cellular systems
- Microcontroller Unit (MCU) Subsystem, including an ARM7EJ-S RISC processor and the accompanying memory management and interrupt handling logics
- Digital Signal Processor (DSP) Subsystem, including DSP cores and the accompanying memory, memory controller, and interrupt controller
- MCU/DSP Interface, where the MCU and the DSPs exchange hardware and software information
- Microcontroller Peripherals, including all user interface modules and RF control interface modules
- Microcontroller Coprocessors: Running computing-intensive processes in place of a microcontroller
- DSP Peripherals: Hardware accelerators for GSM/GPRS channel codec
- Multimedia Subsystem, including camera interface, display controller/resizer/rotator, etc.
- Voice Front End: The data path for converting analog speech from and to digital speech
- Audio Front End: The data path for converting stereo audio from stereo audio source
- Baseband Front End: The data path for converting digital signals of RF modules to analog signals or vice versa
- Timing Generator: Generating the control signals related to the TDMA frame timing
- Power, Reset and Clock subsystem: Managing the power, reset, and clock distribution inside MT6252
- LDOs, power-on sequences, switches and SIM-level shifters

Details of the individual subsystems and blocks are described in the following chapters.

MediaTek Confidential Release for Cenon WCX
MediaTek Confidential Release for Cenon WCX

This document contains information that is proprietary to MediaTek Inc.

Unauthorized reproduction or disclosure of this information in whole or in part is strictly prohibited.

2 Product Description

2.1 Pin Description

2.1.1 Ball Diagram

MT6252 is designed using 11.6 mm x 12.1 mm, 305-ball, 0.5 mm pitch TFBGA package. Pin-outs and the top view are illustrated in **Figure 2** for this package. Outline and dimensions of the package are illustrated in **Figure 19**, while the definition of the package is shown in **Table 33**.

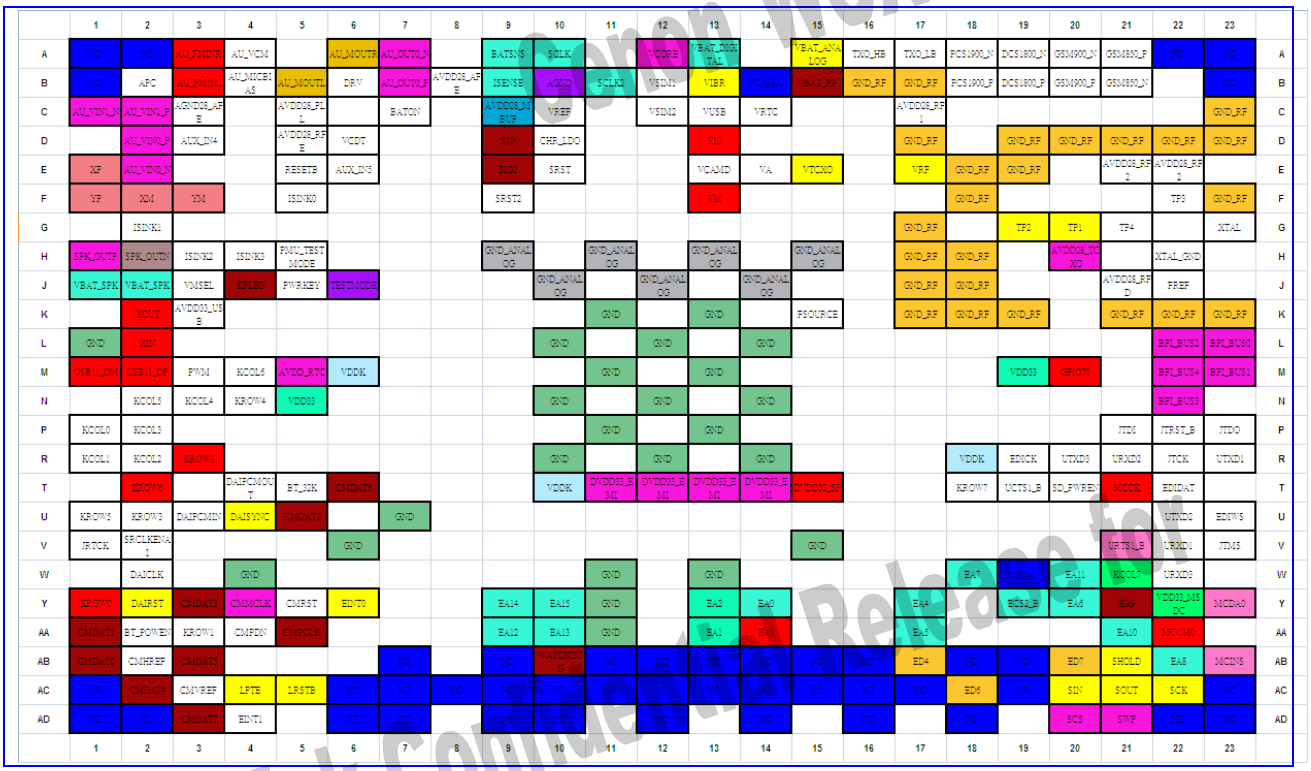

Figure 2 Top view of MT6252 11.6 x 12.1 mm 0.5 mm pitch TFBGA package

2.1.2 Pin Coordination

The pin coordination is shown as in **Table 1**.

MediaTek Confidential Release for Cenon WCX

This document contains information that is proprietary to MediaTek Inc.

Unauthorized reproduction or disclosure of this information in whole or in part is strictly prohibited.

	Pin Name		Pin Name		Pin Name
B10	AGND	N12	GND	AB7	NC
C3	AGND28_AFE	N14	GND	AC7	NC
B2	APC	P11	GND	AD7	NC
B3	AU_FMINL	P13	GND	A2	NC
A3	AU_FMINR	R10	GND	A1	NC
B4	AU_MICBIAS	R12	GND	B1	NC
B5	AU_MOUTL	R14	GND	AC1	NC
A6	AU_MOUTR	U7	GND	AD1	NC
A7	AU_OUT0_N	V6	GND	AD2	NC
B7	AU_OUT0_P	V15	GND	W19	NC
A4	AU_VCM	W4	GND	AC8	NC
E2	AU_VIN0_N	W11	GND	AB9	NC
D2	AU_VIN0_P	W13	GND	AC9	NC
C1	AU_VIN1_N	Y11	GND	AD9	NC
C2	AU_VIN1_P	H9	GND_ANALOG	AC10	NC
D3	AUX_IN4	H11	GND_ANALOG	AD10	NC
E6	AUX_IN5	H13	GND_ANALOG	AB11	NC
M5	AVDD_RTC	H15	GND_ANALOG	AC11	NC
B8	AVDD28_AFE	J10	GND_ANALOG	AB12	NC
C9	AVDD28_MBUF	J12	GND_ANALOG	AC12	NC
C5	AVDD28_PLL	J14	GND_ANALOG	AD12	NC
C17	AVDD28_RF1	B16	GND_RF	AB13	NC
E21	AVDD28_RF2	B17	GND_RF	AC13	NC
E22	AVDD28_RF2	C23	GND_RF	AB14	NC
J21	AVDD28_RFD	D17	GND_RF	AC14	NC
D5	AVDD28_RFE	D19	GND_RF	AD14	NC

MediaTek Confidential Release for Cenon WCX

This document contains information that is proprietary to MediaTek Inc.

Unauthorized reproduction or disclosure of this information in whole or in part is strictly prohibited.

H20	AVDD28_TCXO	D20	GND_RF	A18	PCS1900_N
K3	AVDD33_USB	D21	GND_RF	B18	PCS1900_P
C7	BATON	D22	GND_RF	H5	PMU_TESTMODE
A9	BATSNS	D23	GND_RF	M3	PWM
L23	BPI_BUS0	E18	GND_RF	J5	PWRKEY
M23	BPI_BUS1	E19	GND_RF	E5	RESETB
L22	BPI_BUS2	F18	GND_RF	AC22	SCK
N22	BPI_BUS3	F23	GND_RF	A10	SCLK
M22	BPI_BUS4	G17	GND_RF	B11	SCLK2
T5	BT_32K	H17	GND_RF	AD20	SCS
AA2	BT_POWEN	H18	GND_RF	T20	SD_PWREN
D10	CHR_LDO	J17	GND_RF	AB21	SHOLD
AB1	CMDAT0	J18	GND_RF	AC20	SIN
AA1	CMDAT1	K17	GND_RF	D9	SIO
U5	CMDAT2	K18	GND_RF	E9	SIO2
Y3	CMDAT3	K19	GND_RF	AC21	SOUT
AC2	CMDAT4	K21	GND_RF	H2	SPK_OUTN
AB3	CMDAT5	K22	GND_RF	H1	SPK_OUTP
T6	CMDAT6	K23	GND_RF	V2	SRCLKENAI
AD3	CMDAT7	M20	GPIO70	E10	SRST
AB2	CMHREF	B21	GSM850_N	F9	SRST2
Y4	CMMCLK	A21	GSM850_P	AD21	SWP
AA5	CMPCLK	A20	GSM900_N	J6	TESTMODE
AA4	CMPDN	B20	GSM900_P	G20	TP1
Y5	CMRST	B9	ISENSE	G19	TP2
AC3	CMVREF	F5	ISINK0	F22	TP3
W2	DAICLK	G2	ISINK1	G21	TP4

MediaTek Confidential Release for Cenon WCX

This document contains information that is proprietary to MediaTek Inc.

Unauthorized reproduction or disclosure of this information in whole or in part is strictly prohibited.

U3	DAIPCMIN	H3	ISINK2	A16	TXO_HB
T4	DAIPCMOUT	H4	ISINK3	A17	TXO_LB
Y2	DAIRST	V1	JRTCK	T19	UCTS1_B
U4	DAISYNC	R22	JTCK	V21	URTS1_B
A19	DCS1800_N	P21	JTDI	V22	URXD1
B19	DCS1800_P	P23	JTDO	R21	URXD2
B6	DRV	V23	JTMS	W22	URXD3
T11	DVDD33_EMI	P22	JTRST_B	M1	USB11_DM
T12	DVDD33_EMI	P1	KCOL0	M2	USB11_DP
T13	DVDD33_EMI	R1	KCOL1	R23	UTXD1
T14	DVDD33_EMI	R2	KCOL2	U22	UTXD2
T15	DVDD33_SF	P2	KCOL3	R20	UTXD3
Y14	EA0	N3	KCOL4	E14	VA
AA13	EA1	N2	KCOL5	A15	VBAT_ANALOG
AA21	EA10	M4	KCOL6	A13	VBAT_DIGITAL
W20	EA11	W21	KCOL7	B15	VBAT_RF
AA9	EA12	J4	KPLED	J1	VBAT_SPK
AA10	EA13	Y1	KROW0	J2	VBAT_SPK
Y9	EA14	AA3	KROW1	B14	VCAMA
Y10	EA15	R3	KROW2	E13	VCAMD
Y13	EA2	U2	KROW3	D6	VCDT
AA14	EA3	N4	KROW4	A12	VCORE
Y17	EA4	U1	KROW5	M19	VDD33
AA17	EA5	T2	KROW6	N5	VDD33
Y20	EA6	T18	KROW7	Y22	VDD33_MSDC
W18	EA7	AC4	LPTE	M6	VDDK

MediaTek Confidential Release for Cenon WCX

This document contains information that is proprietary to MediaTek Inc.

Unauthorized reproduction or disclosure of this information in whole or in part is strictly prohibited.

AB22	EA8	AC5	LRSTB	R18	VDDK
Y21	EA9	T21	MCCK	T10	VDDK
Y19	ECS2_B	AA22	MCCM0	B13	VIBR
AB17	ED4	Y23	MCDA0	D13	VIO
AC18	ED6	AB23	MCINS	F13	VM
AB20	ED7	AC6	NC	J3	VMSEL
R19	EDICK	AD6	NC	C10	VREF
T22	EDIDAT	AB15	NC	E17	VRF
U23	EDIWS	AC15	NC	C14	VRTC
Y6	EINT0	AB16	NC	B12	VSIM1
AD4	EINT1	AC16	NC	C12	VSIM2
J22	FREF	AD16	NC	E15	VTCXO
K15	FSOURCE	AC17	NC	C13	VUSB
AA11	GND	AB18	NC	AB10	WATCHDOG
K11	GND	AB19	NC	L2	XIN
K13	GND	AC19	NC	F2	XM
L1	GND	AD18	NC	K2	XOUT
L10	GND	AD22	NC	E1	XP
L12	GND	AD23	NC	G23	XTAL
L14	GND	AC23	NC	H22	XTAL_GND
M11	GND	B23	NC	F3	YM
M13	GND	A23	NC	F1	YP
N10	GND	A22	NC		

Table 1 Pin coordination

MediaTek Confidential Release for Cenon WCX

This document contains information that is proprietary to MediaTek Inc.

Unauthorized reproduction or disclosure of this information in whole or in part is strictly prohibited.

2.1.3 Detailed Pin Description

Abbreviation	Description
AI	Analog input
AO	Analog output
AIO	Analog bi-direction
DI	Digital input
DO	Digital output
DIO	Digital bi-direction
P	Power
G	Ground

Table 2 Acronyms for pin types

Pin Name	Type	Description	Power Domain
System			
TEST_MODE	DIO	Factory test mode enable input	VRTC
XIN	AI	32.768 KHz crystal input	VRTC
XOUT	AO	32.768 KHz crystal output	VRTC
SRCLKENAI	DIO	Security Enable	VDD33
BT_POWEN	DIO	Bluetooth Power Enable	VDD33
SD_PWREN	DIO	SD Power Enable	VDDK
BT_32K	DIO	Bluetooth 32KHz clk	VDD33
PWM	DIO	Pulse-width modulated signal	VDD33
RF Control Circuitry			
BPI_BUS0	DIO	RF hard-wire control bus bit 0	VDD33
BPI_BUS1	DIO	RF hard-wire control bus bit 1	VDD33
BPI_BUS2	DIO	RF hard-wire control bus bit 2	VDD33
BPI_BUS3	DIO	RF hard-wire control bus bit 3	VDD33
BPI_BUS4	DIO	RF hard-wire control bus bit 4	VDD33
UART Interface 1			
URXD1	DIO	UART 1 receive data	VDDK
UTXD1	DIO	UART 1 transmit data	VDDK
URXD2	DIO	UART 2 receive data	VDDK

MediaTek Confidential Release for Cenon WCX

This document contains information that is proprietary to MediaTek Inc.

Unauthorized reproduction or disclosure of this information in whole or in part is strictly prohibited.

Pin Name	Type	Description	Power Domain
UTXD2	DIO	UART 2 transmit data	VDDK
URXD2	DIO	UART 3 receive data	VDDK
UTXD2	DIO	UART 3 transmit data	VDDK
URTS1_B	DIO	UART1 request to send (active low)	DVDD33_EMI
UCTS1_B	DIO	UART1 clear to send (active low)	DVDD33_EMI
Digital Audio Interface			
DAICLK	DIO	DAI interface clock output	VDD33
DAIPCMOUT	DIO	DAI PCM data output	VDD33
DAIPCMIN	DIO	DAI PCM data input	VDD33
DAISYNC	DIO	DAI reset signal input	VDD33
DAIRST	DIO	DAI frame synchronization input	VDD33
JTAG Interface			
JTMS	DI	JTAG test port mode switch	VDD33
JTDI	DI	JTAG test port data input	VDD33
JTCK	DI	JTAG test port clock input	VDD33
JTRST_B	DI	JTAG test port reset input	VDD33
JRTCK	DIO	JTAG test port returned clock output	VDD33
JTDO	DIO	JTAG test port data output	VDD33
External Interrupt			
EINT0	DIO	External interrupt 0	VDDK
EINT1	DIO	External interrupt 1	VDDK
Keypad Interface			
KCOL0	DIO	Keypad column 0	VDD33
KCOL1	DIO	Keypad column 1	VDD33
KCOL2	DIO	Keypad column 2	VDD33
KCOL3	DIO	Keypad column 3	VDD33
KCOL4	DIO	Keypad column 4	VDD33
KCOL5	DIO	Keypad column 5	VDD33
KCOL6	DIO	Keypad column 6	VDD33
KCOL7	DIO	Keypad column 7	VDD33
KROW0	DIO	Keypad row 0	VDD33
KROW1	DIO	Keypad row 1	VDD33
KROW2	DIO	Keypad row 2	VDD33

MediaTek Confidential Release for Cenon WCX

This document contains information that is proprietary to MediaTek Inc.

Unauthorized reproduction or disclosure of this information in whole or in part is strictly prohibited.

Pin Name	Type	Description	Power Domain
KROW3	DIO	Keypad row 3	VDD33
KROW4	DIO	Keypad row 4	VDD33
KROW5	DIO	Keypad row 5	VDD33
KROW6	DIO	Keypad row 6	VDD33
KROW7	DIO	Keypad row 7	VDD33
Camera Interface			
CMRST	DIO	CMOS sensor reset signal output	VDD33
CMPDN	DIO	CMOS sensor power down control	VDD33
CMVREF	DIO	CMOS sensor vertical reference signal input	VDD33
CMHREF	DIO	CMOS sensor horizontal reference signal input	VDD33
CMDAT0	DIO	CMOS sensor data input 0	VDD33
CMDAT1	DIO	CMOS sensor data input 1	VDD33
CMDAT2	DIO	CMOS sensor data input 2	VDD33
CMDAT3	DIO	CMOS sensor data input 3	VDD33
CMDAT4	DIO	CMOS sensor data input 4	VDD33
CMDAT5	DIO	CMOS sensor data input 5	VDD33
CMDAT6	DIO	CMOS sensor data input 6	VDD33
CMDAT7	DIO	CMOS sensor data input 7	VDD33
CMPCLK	DIO	CMOS sensor master clock output	VDD33
CMMCLK	DIO	CMOS sensor master clock output	VDD33
External Memory Interface			
ED4	DIO	Reserved	DVDD33_EMI
ED6	DIO	Reserved	DVDD33_EMI
ED7	DIO	Reserved	DVDD33_EMI
EA0	DIO	Reserved	DVDD33_EMI
EA1	DIO	Reserved	DVDD33_EMI
EA2	DIO	Reserved	DVDD33_EMI
EA3	DIO	Reserved	DVDD33_EMI
EA4	DIO	Reserved	DVDD33_EMI
EA5	DIO	Reserved	DVDD33_EMI
EA6	DIO	Reserved	DVDD33_EMI
EA7	DIO	Reserved	DVDD33_EMI
EA8	DIO	Reserved	DVDD33_EMI
EA9	DIO	Reserved	DVDD33_EMI

MediaTek Confidential Release for Cenon WCX

This document contains information that is proprietary to MediaTek Inc.

Unauthorized reproduction or disclosure of this information in whole or in part is strictly prohibited.

Pin Name	Type	Description	Power Domain
EA10	DIO	Reserved	DVDD33_EMI
EA11	DIO	Reserved	DVDD33_EMI
EA12	DIO	Reserved	DVDD33_EMI
EA13	DIO	Reserved	DVDD33_EMI
EA14	DIO	Reserved	DVDD33_EMI
EA15	DIO	Reserved	DVDD33_EMI
ECS2_B	DIO	Reserved	DVDD33_EMI
WATCHDOG	DIO	Reserved	DVDD33_EMI
MS/SD Card Interface			
MCINS	DIO	SD Card Detect Input	DVDD33_EMI
MCDA0	DIO	SD Serial Data IO 0/Memory Stick Serial Data IO	VDD33_MSDC
MCCK	DIO	SD Serial Clock/Memory Stick Serial Clock	VDD33_MSDC
MCCM0	DIO	SD Command Output/Memory Stick Bus State Output	VDD33_MSDC
USB Interface			
DP	AIO	D+ data input/output	VUSB
DM	AIO	D- data input/output	VUSB
LCD Interface			
LPTE	DIO	Parallel display interface	DVDD33_EMI
LRSTB	DIO	Parallel display interface Reset Signal	DVDD33_EMI
SIM Card Interface			
SIO	DIO	SIM Data Input / Outputs	VSIM1
SRST	DO	SIM card reset output	VSIM1
SCLK	DO	SIM card clock output	VSIM1
SIO2	DIO	SIM 2 Data Input / Outputs	VSIM2
SRST2	DIO	SIM 2 card reset output	VSIM2
SCLK2	DIO	SIM 2 card clock output	VSIM2
Serial Flash Interface			
SCS	DIO	Serial Flash Chip Select	DVDD33_SF
SIN	DIO	Serial Flash Data input / output	DVDD33_SF
SOUT	DIO	Serial Flash Data input / output	DVDD33_SF
SHOLD	DIO	Serial Flash Data input / output	DVDD33_SF
SWP	DIO	Serial Flash Data input / output	DVDD33_SF
SCK	DIO	Serial Flash Clock	DVDD33_SF

MediaTek Confidential Release for Cenon WCX

This document contains information that is proprietary to MediaTek Inc.

Unauthorized reproduction or disclosure of this information in whole or in part is strictly prohibited.

Pin Name	Type	Description	Power Domain
PMIC Miscellaneous			
PMU_TESTMODE	AIO	PMU test mode	
VBAT_RF	AIO	RF used battery voltage input	-
VBAT_Analog	AIO	Analog used battery voltage input	-
VBAT_Digital	AIO	Digital used battery voltage input	-
VREF	AIO	Reference voltage for PMIC	-
VBAT_BACKUP	AIO	Backup battery for RTC	-
BATSNS	AIO	Battery sense input	-
ISENSE	AIO	Current sense input	-
VMSEL	AIO	Memory supply voltage level select input	-
BATON	AIO	Battery insertion test	-
PWRKEY	AIO	Power key press input (low active)	-
RESETB	AIO	Power on reset (low active)	-
VCORE	AIO	Voltage output to digital core	-
SPK_OUTP	AIO	Speaker positive output	-
SPK_OUTN	AIO	Speaker negative output	-
PMU LDO Outputs			
VTCXO	AIO	Crystal or VCTCXO LDO output	
VRF	AIO	RF LDO output	
VCAMA	AIO	Camera module analog/io power	
VA	AIO	Analog LDO output	
VM	AIO	External memory LDO output	
VIO	AIO	Digital I/O voltage LDO output	
VCAMD	AIO	Camera module core/io power	
VUSB	AIO	USB power	
VSIM1	AIO	LDO output to SIM card	
VSIM2	AIO	LDO output to SIM 2 card	
PMU Charger and LED Driving Interface			
DRV	AIO	Charging driving	
CHRIN	AIO	Charger-In voltage detection	
CHR_LDO	AIO	Charger regulator	
VIBR	AIO	Vibrator driving output	
KP_LED	AIO	Keypad LED driver input	
ISINK1	AIO	Current sink1 for B/L LED	

MediaTek Confidential Release for Cenon WCX

This document contains information that is proprietary to MediaTek Inc.

Unauthorized reproduction or disclosure of this information in whole or in part is strictly prohibited.

Pin Name	Type	Description	Power Domain
ISINK3	AIO	Current sink3 for B/L LED	
ISINK2	AIO	Current sink2 for B/L LED	
ISINK4	AIO	Current sink4 for B/L LED	
RF Interface			
GSM850_N	AIO	Differential RF input ball for RX GSM850 band	AVDD28_RF1
GSM850_P	AIO	Differential RF input ball for RX GSM850 band	AVDD28_RF1
GSM900_N	AIO	Differential RF input ball for RX GSM900 band	AVDD28_RF1
GSM900_P	AIO	Differential RF input ball for RX GSM900 band	AVDD28_RF1
DCS1800_N	AIO	Differential RF input ball for RX DCS1800 band	AVDD28_RF1
DCS1800_P	AIO	Differential RF input ball for RX DCS1800 band	AVDD28_RF1
PCS1900_N	AIO	Differential RF input ball for RX PCS1900 band	AVDD28_RF1
PCS1900_P	AIO	Differential RF input ball for RX PCS1900 band	AVDD28_RF1
TXO_LB	AIO	RF output ball for TX LB (GSM900/GSM850)	AVDD28_RF1
TXO_HB	AIO	RF output ball for TX HB (DCS/PCS)	AVDD28_RF1
FREF	AIO	Monitor ball for DCXO output	AVDD28_TCXO
XTAL	AIO	Input ball for DCXO crystal	AVDD28_TCXO
XTAL_GND	AIO	Input ball for DCXO crystal ground	AVDD28_TCXO
TP1	AIO	RF test ball 1	AVDD28_TCXO
TP2	AIO	RF test ball 2	AVDD28_TCXO
TP3	AIO	RF test ball 3	AVDD28_TCXO
TP4	AIO	RF test ball 4	AVDD28_TCXO
Analog Baseband Interface			
AU_MOUTL	A	Audio analog output left channel	
AU_MOUTR	A	Audio analog output right channel	
AU_FMINR	A	FM radio analog input right channel	
AU_FMINL	A	FM radio analog input left channel	
AU_OUT0_N	A	Earphone 0 amplifier output (-)	
AU_OUT0_P	A	Earphone 0 amplifier output (+)	
AU_VIN1_P	A	Microphone 1 amplifier input (+)	
AU_VIN1_N	A	Microphone 1 amplifier input (-)	
AU_VIN0_N	A	Microphone 0 amplifier input (+)	
AU_VIN0_P	A	Microphone 0 amplifier input (-)	
AUX_IN4	A	Auxiliary ADC input	
AUX_IN5	A	Auxiliary ADC input	

MediaTek Confidential Release for Cenon WCX

This document contains information that is proprietary to MediaTek Inc.

Unauthorized reproduction or disclosure of this information in whole or in part is strictly prohibited.

Pin Name	Type	Description	Power Domain
APC	A	Automatic power control DAC output	
XP	A	Touch panel X-axis positive input	
XM	A	Touch panel X-axis negative input	
YP	A	Touch panel Y-axis positive input	
YM	A	Touch panel Y-axis negative input	
AU_VCM	A	Clean VCM for reference buffer	
AU_MICBIAS	A	Microphone bias source P	
Digital Power			
VDDK	P	Supply voltage of digital core	
VDD33	P	Supply voltage of digital IO	
DVDD33_SF	P	Supply voltage of digital Serial Flash IO	
VDD33_MSDC	P	Supply voltage of digital SD/MS IO	
DVDD33_EMI	P	Supply voltage of external memory interface	
RF Power and Ground			
AVDD28_RF1	P	AVDD 2.8V for RFSYS front end circuit block	
AVDD28_RF2	P	AVDD 2.8V for RFSYS RFVCO	
AVDD28_TCXO	P	AVDD 2.8V for RFSYS DCXO, SX and RX IF	
AVDD28_RFD	P	AVDD 2.8V for RFSYS Digital circuit block	
GND_RF	G	RF Ground	
Analog Power and Ground			
AGND28_AFE	A	AFE AGND (clean reference ground)	-
VUSB	A	Supply voltage of USB analog	-
VRTC	A	Supply voltage of real time clock circuitry	-
VBAT_SPK	A	Supply voltage of Speaker	
GND_ANALOG	A	Supply ground of analog	-
AVDD28_PLL	A	Supply voltage of PLL	
AVDD28_RFE	A	Supply voltage of RFE	
AVDD28_MBUF	A	Audio buffer AVDD	
AVDD28_AFE	A	AFE AVDD	
AGND	A	Clean GND for ANALOG Circuitry	
GND	A	Ground for MT6252	

Table 3 Pin function description and power domain

MediaTek Confidential Release for Cenon WCX

This document contains information that is proprietary to MediaTek Inc.

Unauthorized reproduction or disclosure of this information in whole or in part is strictly prohibited.

Name	Reset			Output Drivability	Termination When Not Used	IO Type
	State	Aux	PU/PD			
Analog IO						
APC	-	-	-	-	-	ANALOG
AU_FMINL	-	-	-	-	-	ANALOG
AU_FMINR	-	-	-	-	-	ANALOG
AU_MICBIAS	-	-	-	-	-	ANALOG
AU_MOUTL	-	-	-	-	-	ANALOG
AU_MOUTR	-	-	-	-	-	ANALOG
AU_OUT0_N	-	-	-	-	-	ANALOG
AU_OUT0_P	-	-	-	-	-	ANALOG
AU_VCM	-	-	-	-	-	ANALOG
AU_VIN0_N	-	-	-	-	-	ANALOG
AU_VIN0_P	-	-	-	-	-	ANALOG
AU_VIN1_N	-	-	-	-	-	ANALOG
AU_VIN1_P	-	-	-	-	-	ANALOG
AUX_IN4	-	-	-	-	-	ANALOG
AUX_IN5	-	-	-	-	-	ANALOG
BATON	-	-	-	-	-	ANALOG
DCS1800_N	-	-	-	-	-	ANALOG
DCS1800_P	-	-	-	-	-	ANALOG
DRV	-	-	-	-	-	ANALOG
FREF	-	-	-	-	-	ANALOG
FSOURCE	-	-	-	-	-	ANALOG
GSM850_N	-	-	-	-	-	ANALOG
GSM850_P	-	-	-	-	-	ANALOG
GSM900_N	-	-	-	-	-	ANALOG
GSM900_P	-	-	-	-	-	ANALOG
ISENSE	-	-	-	-	-	ANALOG
ISINK0	-	-	-	-	-	ANALOG
ISINK1	-	-	-	-	-	ANALOG
ISINK2	-	-	-	-	-	ANALOG
ISINK3	-	-	-	-	-	ANALOG
KPLED	-	-	-	-	-	ANALOG
PCS1900_N	-	-	-	-	-	ANALOG
PCS1900_P	-	-	-	-	-	ANALOG

MediaTek Confidential Release for Cenon WCX

This document contains information that is proprietary to MediaTek Inc.

Unauthorized reproduction or disclosure of this information in whole or in part is strictly prohibited.

Name	Reset			Output Drivability	Termination When Not Used	IO Type
	State	Aux	PU/PD			
PMU_TESTMODE	-	-	-	-	VSS	ANALOG
PWRKEY	-	-	-	-	-	ANALOG
RESETB	-	-	-	-	-	ANALOG
SCLK	-	-	-	-	-	ANALOG
SCLK2	-	-	-	-	-	ANALOG
SIO	-	-	-	-	-	ANALOG
SIO2	-	-	-	-	-	ANALOG
SPK_OUTN	-	-	-	-	-	ANALOG
SPK_OUTP	-	-	-	-	-	ANALOG
SRST	-	-	-	-	-	ANALOG
SRST2	-	-	-	-	-	ANALOG
TP1	-	-	-	-	VSS	ANALOG
TP2	-	-	-	-	VSS	ANALOG
TP3	-	-	-	-	VSS	ANALOG
TP4	-	-	-	-	VSS	ANALOG
TXO_HB	-	-	-	-	-	ANALOG
TXO_LB	-	-	-	-	-	ANALOG
USB11_DM	-	-	-	-	-	ANALOG
USB11_DP	-	-	-	-	-	ANALOG
VCDT	-	-	-	-	-	ANALOG
VMSEL	-	-	-	-	-	ANALOG
VREF	-	-	-	-	-	ANALOG
XIN	-	-	-	-	-	ANALOG
XM	-	-	-	-	-	ANALOG
XOUT	-	-	-	-	-	ANALOG
XP	-	-	-	-	-	ANALOG
XTAL	-	-	-	-	-	ANALOG
YM	-	-	-	-	-	ANALOG
YP	-	-	-	-	-	ANALOG
PWR/GND						
AVDD_RTC	-	-	-	-	-	PWR
AVDD28_AFE	-	-	-	-	-	PWR
AVDD28_MBUF	-	-	-	-	-	PWR
AVDD28_PLL	-	-	-	-	-	PWR

MediaTek Confidential Release for Cenon WCX

This document contains information that is proprietary to MediaTek Inc.

Unauthorized reproduction or disclosure of this information in whole or in part is strictly prohibited.

Name	Reset			Output Drivability	Termination When Not Used	IO Type
	State	Aux	PU/PD			
AVDD28_RF1	-	-	-	-	-	PWR
AVDD28_RF2	-	-	-	-	-	PWR
AVDD28_RFD	-	-	-	-	-	PWR
AVDD28_RFE	-	-	-	-	-	PWR
AVDD28_TCXO	-	-	-	-	-	PWR
AVDD33_USB	-	-	-	-	-	PWR
BATSNS	-	-	-	-	-	PWR
CHR_LDO	-	-	-	-	-	PWR
VA	-	-	-	-	-	PWR
VBAT_ANALOG	-	-	-	-	-	PWR
VBAT_DIGITAL	-	-	-	-	-	PWR
VBAT_RF	-	-	-	-	-	PWR
VBAT_SPK	-	-	-	-	-	PWR
VCAMA	-	-	-	-	-	PWR
VCAMD	-	-	-	-	-	PWR
VCORE	-	-	-	-	-	PWR
VDD33	-	-	-	-	-	PWR
VDD33_MSDC	-	-	-	-	-	PWR
DVDD33_EMI	-	-	-	-	-	PWR
DVDD33_SF	-	-	-	-	-	PWR
VDDK	-	-	-	-	-	PWR
VIBR	-	-	-	-	-	PWR
VIO	-	-	-	-	-	PWR
VM	-	-	-	-	-	PWR
VRF	-	-	-	-	-	PWR
VSIM1	-	-	-	-	-	PWR
VSIM2	-	-	-	-	-	PWR
VTCXO	-	-	-	-	-	PWR
VUSB	-	-	-	-	-	PWR
VRTC	-	-	-	-	-	PWR
AGND28_AFE	-	-	-	-	-	GND
AGND	-	-	-	-	-	GND
GND	-	-	-	-	-	GND
GND_ANALOG	-	-	-	-	-	GND

MediaTek Confidential Release for Cenon WCX

This document contains information that is proprietary to MediaTek Inc.

Unauthorized reproduction or disclosure of this information in whole or in part is strictly prohibited.

Name	Reset			Output Drivability	Termination When Not Used	IO Type
	State	Aux	PU/PD			
GND_RF	-	-	-	-	-	GND
XTAL_GND	-	-	-	-	-	GND
TESTMODE						
TESTMODE	I	X	PD	12mA	No Need	IO Type 2
RF Control Circuitry						
BPI_BUS4	LO	X	-	2,4,6,8mA	No Need	IO Type 2
BPI_BUS3	LO	X	-	2,4,6,8mA	No Need	IO Type 2
BPI_BUS2	LO	X	-	2,4,6,8mA	No Need	IO Type 2
BPI_BUS1	LO	X	-	2,4,6,8mA	No Need	IO Type 2
BPI_BUS0	LO	X	-	2,4,6,8mA	No Need	IO Type 2
UART Interface 1						
URXD1	I	0	PU	4,8,12,16mA	No Need	IO Type 2
UTXD1	HO	0	PU	4,8,12,16mA	No Need	IO Type 2
UCTS1_B	I	0	PU	4,8,12,16mA	No Need	IO Type 2
URTS1_B	I	0	PU	4,8,12,16mA	No Need	IO Type 2
UART Interface 2						
URXD2	I	0	PU	4,8,12,16mA	No Need	IO Type 2
UTXD2	I	0	PU	4,8,12,16mA	No Need	IO Type 2
UART Interface 3						
URXD3	I	0	PU	4,8,12,16mA	No Need	IO Type 2
UTXD3	I	0	PU	4,8,12,16mA	No Need	IO Type 2
Digital Audio Interface						
DAICLK	I	0	PD	2,4,6,8mA	No Need	IO Type 2
DAIPCMOUT	I	0	PD	2,4,6,8mA	No Need	IO Type 2
DAIPCMIN	I	0	PD	2,4,6,8mA	No Need	IO Type 2
DAISYNC	I	0	PD	2,4,6,8mA	No Need	IO Type 2
DAIRST	I	0	PD	2,4,6,8mA	No Need	IO Type 2
JTAG Interface						
JTMS	I	X	PU	N/A	No Need	IO Type 3
JTDI	I	X	PU	N/A	No Need	IO Type 3
JTCK	I	X	PU	N/A	No Need	IO Type 3
JTRST_B	I	X	PD	N/A	No Need	IO Type 3
JTDO	XO	X	-	2,4,6,8mA	No Need	IO Type 2
JRTCK	LO	4	PU	2,4,6,8mA	No Need	IO Type 2

MediaTek Confidential Release for Cenon HCX

This document contains information that is proprietary to MediaTek Inc.

Unauthorized reproduction or disclosure of this information in whole or in part is strictly prohibited.

Name	Reset			Output Drivability	Termination When Not Used	IO Type
	State	Aux	PU/PD			
PWM						
PWM	I	2	-	4,8,12,16mA	VSS	IO Type 2
External Interrupt						
EINT0	I	1	PU	2,4,6,8mA	No Need	IO Type 2
EINT1	I	1	PU	2,4,6,8mA	No Need	IO Type 2
Keypad Interface						
KCOL7	I	0	PU	2,4,6,8mA	No Need	IO Type 2
KCOL6	I	0	PU	2,4,6,8mA	No Need	IO Type 2
KCOL5	I	0	PU	2,4,6,8mA	No Need	IO Type 2
KCOL4	I	0	PU	2,4,6,8mA	No Need	IO Type 2
KCOL3	I	0	PU	2,4,6,8mA	No Need	IO Type 2
KCOL2	I	0	PU	2,4,6,8mA	No Need	IO Type 2
KCOL1	I	0	PU	2,4,6,8mA	No Need	IO Type 2
KCOL0	I	0	PU	2,4,6,8mA	No Need	IO Type 2
KROW7	I	0	PD	2,4,6,8mA	No Need	IO Type 2
KROW6	I	0	PD	2,4,6,8mA	No Need	IO Type 2
KROW5	I	0	PD	2,4,6,8mA	No Need	IO Type 2
KROW4	I	0	PD	2,4,6,8mA	No Need	IO Type 2
KROW3	I	0	PD	2,4,6,8mA	No Need	IO Type 2
KROW2	I	0	PD	2,4,6,8mA	No Need	IO Type 2
KROW1	I	0	PD	2,4,6,8mA	No Need	IO Type 2
KROW0	I	0	PD	2,4,6,8mA	No Need	IO Type 2
System						
SRCLKENA	I	1	PD	2,4,6,8mA	No Need	IO Type 2
Camera Interface						
CMRST	I	0	PU	4,8,12,16mA	No Need	IO Type 2
CMPDN	I	0	PD	4,8,12,16mA	No Need	IO Type 2
CMVREF	I	0	PD	4,8,12,16mA	No Need	IO Type 2
CMHREF	I	0	PD	4,8,12,16mA	No Need	IO Type 2
CMDAT7	I	0	PD	4,8,12,16mA	No Need	IO Type 2
CMDAT6	I	0	PD	4,8,12,16mA	No Need	IO Type 2
CMDAT5	I	0	PD	4,8,12,16mA	No Need	IO Type 2
CMDAT4	I	0	PD	4,8,12,16mA	No Need	IO Type 2
CMDAT3	I	0	PD	4,8,12,16mA	No Need	IO Type 2

MediaTek Confidential Release for Cenon HCX

This document contains information that is proprietary to MediaTek Inc.

Unauthorized reproduction or disclosure of this information in whole or in part is strictly prohibited.

Name	Reset			Output Drivability	Termination When Not Used	IO Type
	State	Aux	PU/PD			
CMDAT2	I	0	PD	4,8,12,16mA	No Need	IO Type 2
CMDAT1	I	0	PD	4,8,12,16mA	No Need	IO Type 2
CMDAT0	I	0	PD	4,8,12,16mA	No Need	IO Type 2
CMPCLK	I	0	PD	4,8,12,16mA	No Need	IO Type 2
CMMCLK	I	0	PD	4,8,12,16mA	No Need	IO Type 2
LCD Interface						
LPTE	I	0	PD	4,8,12,16mA	No Need	IO Type 2
LRSTB	I	0	PD	4,8,12,16mA	No Need	IO Type 2
I2S						
EDICK	I	0	PD	4,8,12,16mA	No Need	IO Type 2
EDIDAT	I	0	PD	4,8,12,16mA	No Need	IO Type 2
EDIWS	I	0	PD	4,8,12,16mA	No Need	IO Type 2
External Memory Interface						
EA15	LO	0	-	2,4,6,8,10,12,14,16mA	No Need	IO Type 2
EA14	LO	0	-	2,4,6,8,10,12,14,16mA	No Need	IO Type 2
EA13	LO	0	-	2,4,6,8,10,12,14,16mA	No Need	IO Type 2
EA12	LO	0	-	2,4,6,8,10,12,14,16mA	No Need	IO Type 2
EA11	LO	0	-	2,4,6,8,10,12,14,16mA	No Need	IO Type 2
EA10	LO	0	-	2,4,6,8,10,12,14,16mA	No Need	IO Type 2
EA9	LO	0	-	2,4,6,8,10,12,14,16mA	No Need	IO Type 2
EA8	LO	0	-	2,4,6,8,10,12,14,16mA	No Need	IO Type 2
EA7	LO	0	-	2,4,6,8,10,12,14,16mA	No Need	IO Type 2
EA6	LO	0	-	2,4,6,8,10,12,14,16mA	No Need	IO Type 2
EA5	LO	0	-	2,4,6,8,10,12,14,16mA	No Need	IO Type 2
EA4	LO	0	-	2,4,6,8,10,12,14,16mA	No Need	IO Type 2
EA3	LO	0	-	2,4,6,8,10,12,14,16mA	No Need	IO Type 2
EA2	LO	0	-	2,4,6,8,10,12,14,16mA	No Need	IO Type 2
EA1	LO	0	-	2,4,6,8,10,12,14,16mA	No Need	IO Type 2
EA0	LO	0		2,4,6,8,10,12,14,16mA	No Need	IO Type 2
ECS2_B	HO	0	-	2,4,6,8,10,12,14,16mA	No Need	IO Type 2
ED7	LO	0	-	2,4,6,8,10,12,14,16mA	No Need	IO Type 2
ED6	LO	0	-	2,4,6,8,10,12,14,16mA	No Need	IO Type 2
ED4	LO	X	-	2,4,6,8,10,12,14,16mA	No Need	IO Type 2
WATCHDOG	HO	X	PD	2,4,6,8,10,12,14,16mA	No Need	IO Type 2

MediaTek Confidential Release for Canon WCX

This document contains information that is proprietary to MediaTek Inc.

Unauthorized reproduction or disclosure of this information in whole or in part is strictly prohibited.

Name	Reset			Output Drivability	Termination When Not Used	IO Type
	State	Aux	PU/PD			
Serial Flash Interface						
SCK	LO	1	-	2,4,6,8,10,12,14,16mA	No Need	IO Type 2
SWP	LO	1	-	2,4,6,8,10,12,14,16mA	No Need	IO Type 2
SHOLD	LO	1	-	2,4,6,8,10,12,14,16mA	No Need	IO Type 2
SCS	HO	1	-	2,4,6,8,10,12,14,16mA	No Need	IO Type 2
SIN	LO	1	-	2,4,6,8,10,12,14,16mA	No Need	IO Type 2
SOUT	LO	1	-	2,4,6,8,10,12,14,16mA	No Need	IO Type 2
MS/SD Card Interface						
MCINS	I	0	PU	4,8,12,16mA	No Need	IO Type 2
MCCK	I	0	PD	4,8,12,16mA	No Need	IO Type 2
MCDA0	I	0	PD	4,8,12,16mA	No Need	IO Type 2
MCCM0	I	0	PD	4,8,12,16mA	No Need	IO Type 2
SD_PWREN	I	0	PD	2,4,6,8mA	No Need	IO Type 2
MISC/GPIO						
BT_POWEN	I	0	PD	2,4,6,8mA	No Need	IO Type 2
BT_32K	I	0	PD	2,4,6,8mA	No Need	IO Type 2
GPIO70	I	0	PD	2,4,6,8mA	No Need	IO Type 2

Table 4 Default pin state drivability

Abbreviation	Description
I	Input
LO	Low output
HO	High output
XO	Low or high output
PU	Pull-up
PD	Pull-down
-	No PU/PD
0~N	Aux. function number
X	Delicate function pin

Table 5 State of Pins

MediaTek Confidential Release for Cenon WCX

This document contains information that is proprietary to MediaTek Inc.

Unauthorized reproduction or disclosure of this information in whole or in part is strictly prohibited.

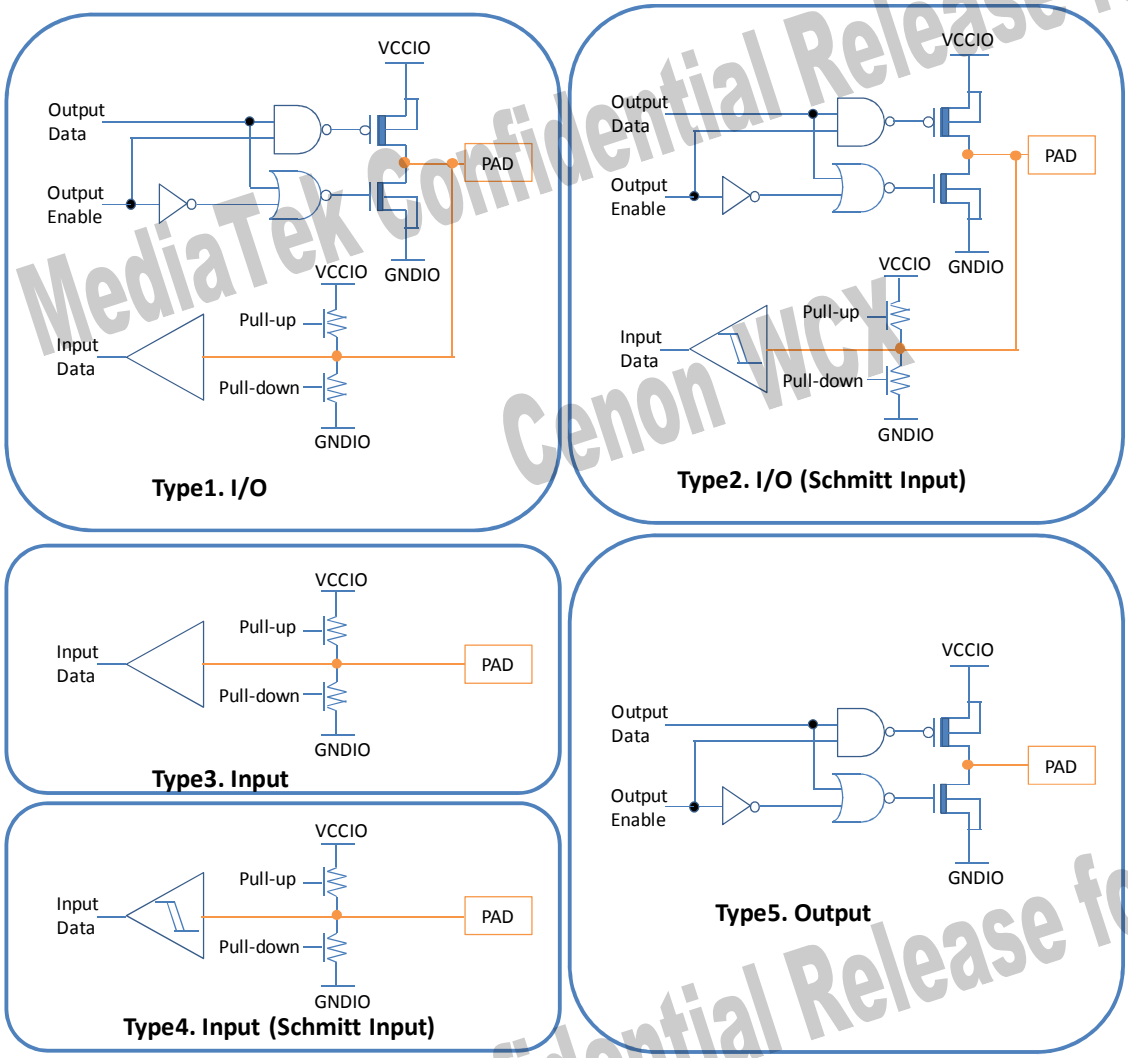

Figure 3 IO Types in state of pins

2.1.4 Pin Multiplexing, Capability and Settings

Abbreviation	Description
PU	Pull-up, not controllable

MediaTek Confidential Release for Cenon WCX

This document contains information that is proprietary to MediaTek Inc.

Unauthorized reproduction or disclosure of this information in whole or in part is strictly prohibited.

Abbreviation	Description
PD	Pull-down, not controllable
CU	Pull-up, controllable
CD	Pull-down, controllable
X	Cannot pull-up or pull-dowm

Table 6 Acronyms for pull-up/down typess

Name	Aux. Function	Aux. Name	Aux. Type	PU/PD/ CU/CD	Driving	SMT
PWM	0	GPIO0	IO	CU, CD	4mA, 8mA, 12mA, 16mA	0
	1	PWM1 output	O	CU, CD	4mA, 8mA, 12mA, 16mA	0
	2	CLKSQ_SEL	I	CU, CD	-	0
KCOL6	0	GPIO1	IO	CU, CD	2mA,4mA,6mA,8mA	0
	1	KCOL6	I	CU, CD	-	0
	2	EINT4	I	CU, CD	-	0
KCOL5	0	GPIO2	IO	CU, CD	2mA,4mA,6mA,8mA	0
	1	KCOL5	I	CU, CD	-	0
	3	CAM_SDA	O	CU, CD	2mA,4mA,6mA,8mA	0
KCOL4	0	GPIO3	IO	CU, CD	2mA,4mA,6mA,8mA	0
	1	KCOL4	I	CU, CD	-	0
	3	CAM_SCL	O	CU, CD	2mA,4mA,6mA,8mA	0
KCOL3	0	GPIO4	IO	CU, CD	2mA,4mA,6mA,8mA	0
	1	KCOL3	I	CU, CD	-	0
	2	UART1 CTS	I	CU, CD	-	0
	3	BSI clock	O	CU, CD	2mA,4mA,6mA,8mA	0
KCOL2	0	GPIO5	IO	CU, CD	2mA,4mA,6mA,8mA	0
	1	KCOL2	I	CU, CD	-	0
	2	UART1 CTS	I	CU, CD	-	0
	3	BSI clock	O	CU, CD	2mA,4mA,6mA,8mA	0
KCOL1	0	GPIO6	IO	CU, CD	2mA,4mA,6mA,8mA	0
	1	KCOL1	I	CU, CD	-	0
	3	BSI clock	O	CU, CD	2mA,4mA,6mA,8mA	0
	5	EDICK	IO	CU, CD	2mA,4mA,6mA,8mA	0
KCOL0	0	GPIO7	IO	CU, CD	2mA,4mA,6mA,8mA	0
	1	KCOL0	I	CU, CD	-	0
KROW5	0	GPIO8	IO	CU, CD	2mA,4mA,6mA,8mA	0
	1	KROW5	IO	CU, CD	2mA,4mA,6mA,8mA	0
	2	EINT5	I	CU, CD	-	0
	5	EDIDAT	IO	CU, CD	2mA,4mA,6mA,8mA	0
KROW4	0	GPIO9	IO	CU, CD	2mA,4mA,6mA,8mA	0
	1	KROW4	IO	CU, CD	2mA,4mA,6mA,8mA	0
	3	SRCLKENA	O	CU, CD	2mA,4mA,6mA,8mA	0
	5	EDIWS	IO	CU, CD	2mA,4mA,6mA,8mA	0
KROW3	0	GPIO10	IO	CU, CD	2mA,4mA,6mA,8mA	0
	1	KROW3	IO	CU, CD	2mA,4mA,6mA,8mA	0
	2	URST1 RTS_B	O	CU, CD	2mA,4mA,6mA,8mA	0

MediaTek Confidential Release for Cenon WCX

This document contains information that is proprietary to MediaTek Inc.

Unauthorized reproduction or disclosure of this information in whole or in part is strictly prohibited.

Name	Aux. Function	Aux. Name	Aux. Type	PU/PD/ CU/CD	Driving	SMT
	4	LSA0	O	CU, CD	2mA,4mA,6mA,8mA	0
KROW2	0	GPIO11	IO	CU, CD	2mA,4mA,6mA,8mA	0
	1	KROW2	IO	CU, CD	2mA,4mA,6mA,8mA	0
	4	LSCK	O	CU, CD	2mA,4mA,6mA,8mA	0
	5	URTD3	O	CU, CD	2mA,4mA,6mA,8mA	0
KROW1	0	GPIO12	IO	CU, CD	2mA,4mA,6mA,8mA	0
	1	KROW1	IO	CU, CD	2mA,4mA,6mA,8mA	0
	4	LSDA	IO	CU, CD	2mA,4mA,6mA,8mA	0
KROW0	0	GPIO13	IO	CU, CD	2mA,4mA,6mA,8mA	0
	1	KROW0	IO	CU, CD	2mA,4mA,6mA,8mA	0
	4	LSDI	IO	CU, CD	2mA,4mA,6mA,8mA	0
ECS2_B	0	GPIO14	IO	CU, CD	2mA, 6mA, 8mA, 10mA, 12mA , 14mA, 16mA, 18mA	0
	1	ECS2_B	O	CU, CD	2mA, 6mA, 8mA, 10mA, 12mA , 14mA, 16mA, 18mA	0
	2	LPCE0_B	O	CU, CD	2mA, 6mA, 8mA, 10mA, 12mA , 14mA, 16mA, 18mA	0
	3	LSCE0_B	O	CU, CD	2mA, 6mA, 8mA, 10mA, 12mA , 14mA, 16mA, 18mA	0
	6	SEN2LCM_CS_B	O	CU, CD	2mA, 6mA, 8mA, 10mA, 12mA , 14mA, 16mA, 18mA	0
DAICLK	0	GPIO15	O	CU, CD	2mA,4mA,6mA,8mA	0
	1	DAICLK	O	CU, CD	2mA,4mA,6mA,8mA	0
	3	EDICLK	IO	CU, CD	2mA,4mA,6mA,8mA	0
DAIPCMOUT	0	GPIO16	IO	CU, CD	2mA,4mA,6mA,8mA	0
	1	DAIPCMOUT	O	CU, CD	2mA,4mA,6mA,8mA	0
	3	EDI_DATA	IO	CU, CD	2mA,4mA,6mA,8mA	0
DAIPCMIN	0	GPIO17	IO	CU, CD	2mA,4mA,6mA,8mA	0
	1	DAIPCMIN	I	CU, CD	-	0
DAIRST	0	GPIO18	IO	CU, CD	2mA,4mA,6mA,8mA	0
	1	DAIRST	I	CU, CD	-	0
DAISYNC	0	GPIO19	IO	CU, CD	2mA,4mA,6mA,8mA	0
	1	DAISYNC	O	CU, CD	2mA,4mA,6mA,8mA	0
	3	EDI_WS	IO	CU, CD	2mA,4mA,6mA,8mA	0
URXD3	0	GPIO20	IO	CU, CD	4mA,8mA,12mA,16mA	0
	1	URXD3	I	CU, CD	-	0
	2	UCTS2_B	I	CU, CD	-	0
UTXD3	0	GPIO21	IO	CU, CD	4mA,8mA,12mA,16mA	0
	1	UTXD3	O	CU, CD	4mA,8mA,12mA,16mA	0
	2	URTS2_B	O	CU, CD	4mA,8mA,12mA,16mA	0
URXD2	0	GPIO22	IO	CU, CD	4mA,8mA,12mA,16mA	0
	1	URXD2	I	CU, CD	-	0
	2	UCTS1_B	I	CU, CD	-	0
	3	CAM_SCL	IO	CU, CD	4mA,8mA,12mA,16mA	0
UTXD2	0	GPIO23	IO	CU, CD	4mA,8mA,12mA,16mA	0
	1	UTXD2	O	CU, CD	-	0
	2	URTS1_B	O	CU, CD	-	0
	3	CAM_SDA	IO	CU, CD	4mA,8mA,12mA,16mA	0
UCTS1_B	0	GPIO24	IO	CU, CD	4mA,8mA,12mA,16mA	0
	1	UCTS1_B	I	CU, CD	-	0

MediaTek Confidential Release for Cenon WCX

This document contains information that is proprietary to MediaTek Inc.

Unauthorized reproduction or disclosure of this information in whole or in part is strictly prohibited.

Name	Aux. Function	Aux. Name	Aux. Type	PU/PD/ CU/CD	Driving	SMT
	2	CAM_SCL	IO	CU, CD	4mA,8mA,12mA,16mA	0
	3	NLD13	IO	CU, CD	4mA,8mA,12mA,16mA	0
	5	EINT5	I	CU, CD	-	0
URTS1_B	0	GPIO25	IO	CU, CD	4mA,8mA,12mA,16mA	0
	1	UCTS1_B	O	CU, CD	-	0
	2	CAM_SDA	IO	CU, CD	4mA,8mA,12mA,16mA	0
	3	NLD14	IO	CU, CD	4mA,8mA,12mA,16mA	0
	5	EINT6	I	CU, CD	-	0
EINT0	0	GPIO26	IO	CU, CD	2mA,4mA,6mA,8mA	0
	1	EINT0	I	CU, CD	-	0
EINT1	0	GPIO27	IO	CU, CD	2mA,4mA,6mA,8mA	0
	1	EINT1	I	CU, CD	-	0
BPI_BUS4	0	GPIO28	IO	CU, CD	2mA,4mA,6mA,8mA	0
	1	BPI_BUS4	O	CU, CD	2mA,4mA,6mA,8mA	0
PAD_IO_SIM2	0	GPIO29	IO	X	4mA	0
	1	SIO2	IO	X	4mA	0
PAD_CLK_SIM2	0	GPIO30	IO	X	4mA	0
	1	SCLK2	O	X	4mA	0
PAD_RST_SIM2	0	GPIO31	IO	X	4mA	0
	1	SRST2	O	X	4mA	0
BT_POWEN	0	GPIO32	IO	CU, CD	2mA,4mA,6mA,8mA	0
SD_PWREN	0	GPIO33	IO	CU, CD	2mA,4mA,6mA,8mA	0
	1	CLK32K	O	CU, CD	2mA,4mA,6mA,8mA	0
BT_32K	0	GPIO34	IO	CU, CD	2mA,4mA,6mA,8mA	0
	2	SRCLKENA	O	CU, CD	2mA,4mA,6mA,8mA	0
SRCLKENAI	0	GPIO35	IO	CU, CD	2mA,4mA,6mA,8mA	0
	1	SRCLKENAI	I	CU, CD	-	0
MCINS	0	GPIO36	IO	CU, CD	4mA,8mA,12mA,16mA	0
	1	MCINS	I	CU, CD	-	0
	3	NLD15	IO	CU, CD	4mA,8mA,12mA,16mA	0
	5	EINT6	I	CU, CD	-	0
MCCK	0	GPIO37	IO	CU, CD	4mA,8mA,12mA,16mA	0
	1	MCCK	I	CU, CD	-	0
MCDA0	0	GPIO38	IO	CU, CD	4mA,8mA,12mA,16mA	0
	1	MCDA0	IO	CU, CD	4mA,8mA,12mA,16mA	0
MCCM0	0	GPIO39	IO	CU, CD	4mA,8mA,12mA,16mA	0
	1	MCCM0	IO	CU, CD	4mA,8mA,12mA,16mA	0
LPTE	0	GPIO40	IO	CU, CD	4mA,8mA,12mA,16mA	0
	1	LPTE	I	CU, CD	-	0
LRSTB	0	GPIO41	IO	CU, CD	4mA,8mA,12mA,16mA	0
	1	LRSTB	O	CU, CD	4mA,8mA,12mA,16mA	0
ECS3_B	0	GPIO42	IO	CU, CD	2mA, 6mA, 8mA, 10mA, 12mA , 14mA, 16mA, 18mA	0
	2	LPCE1_B	O	CU, CD	2mA, 6mA, 8mA, 10mA, 12mA , 14mA, 16mA, 18mA	0
	3	LSCE1_B	O	CU, CD	2mA, 6mA, 8mA, 10mA, 12mA , 14mA, 16mA, 18mA	0
	6	SEN2LCM_CS_B	O	CU, CD	2mA, 6mA, 8mA, 10mA,	0

MediaTek Confidential Release for Cenon WCX

This document contains information that is proprietary to MediaTek Inc.

Unauthorized reproduction or disclosure of this information in whole or in part is strictly prohibited.

Name	Aux. Function	Aux. Name	Aux. Type	PU/PD/ CU/CD	Driving	SMT
					12mA , 14mA, 16mA, 18mA	
	7	EINT2	I	CU, CD	-	0
KCOL7	0	GPIO43	IO	CU, CD	2mA,4mA,6mA,8mA	0
	1	KCOL7	I	CU, CD	-	0
	2	EINT2	I	CU, CD	-	0
	4	LSCK	O	CU, CD	2mA,4mA,6mA,8mA	0
KROW6	0	GPIO44	IO	CU, CD	2mA,4mA,6mA,8mA	0
	1	KROW6	IO	CU, CD	2mA,4mA,6mA,8mA	0
	4	LSDA	IO	CU, CD	2mA,4mA,6mA,8mA	0
KROW7	0	GPIO45	IO	CU, CD	2mA,4mA,6mA,8mA	0
	1	KROW6	IO	CU, CD	2mA,4mA,6mA,8mA	0
	2	EINT3	I	CU, CD	-	0
	4	CAM_SDA	O	CU, CD	2mA,4mA,6mA,8mA	0
CMDAT0	0	GPIO47	IO	CU, CD	4mA,8mA,12mA,16mA	0
	1	CMDAT0	I	CU, CD	-	0
	2	CAM_CSD	I	CU, CD	-	0
CMDAT1	0	GPIO48	IO	CU, CD	4mA,8mA,12mA,16mA	0
	1	CMDAT1	I	CU, CD	-	0
	2	LSDA	IO	CU, CD	4mA,8mA,12mA,16mA	0
CMDAT2	0	GPIO49	IO	CU, CD	4mA,8mA,12mA,16mA	0
	1	CMDAT2	I	CU, CD	-	0
CMDAT3	0	GPIO50	IO	CU, CD	4mA,8mA,12mA,16mA	0
	1	CMDAT3	I	CU, CD	-	0
CMDAT4	0	GPIO51	IO	CU, CD	4mA,8mA,12mA,16mA	0
	1	CMDAT4	I	CU, CD	-	0
CMDAT5	0	GPIO52	IO	CU, CD	4mA,8mA,12mA,16mA	0
	1	CMDAT5	I	CU, CD	-	0
CMDAT6	0	GPIO53	IO	CU, CD	4mA,8mA,12mA,16mA	0
	1	CMDAT6	I	CU, CD	-	0
CMDAT7	0	GPIO54	IO	CU, CD	4mA,8mA,12mA,16mA	0
	1	CMDAT7	I	CU, CD	-	0
CMHREF	0	GPIO55	IO	CU, CD	4mA,8mA,12mA,16mA	0
	1	CMHREF	I	CU, CD	-	0
CMVREF	0	GPIO56	IO	CU, CD	4mA,8mA,12mA,16mA	0
	1	CMVREF	I	CU, CD	-	0
CMPDN	0	GPIO57	IO	CU, CD	4mA,8mA,12mA,16mA	0
	1	CMPDN	O	CU, CD	4mA,8mA,12mA,16mA	0
	2	LSCK	O	CU, CD	4mA,8mA,12mA,16mA	0
CMMCLK	0	GPIO58	IO	CU, CD	4mA,8mA,12mA,16mA	0
	1	CMMCLK	O	CU, CD	4mA,8mA,12mA,16mA	0
CMPCLK	0	GPIO59	IO	CU, CD	4mA,8mA,12mA,16mA	0
	1	CMPCLK	I	CU, CD	-	0
	2	CAM_CSK	I	CU, CD	-	0
CMRST	0	GPIO60	IO	CU, CD	4mA,8mA,12mA,16mA	0
	1	CMRST	O	CU, CD	4mA,8mA,12mA,16mA	0
EDICK	0	GPIO61	IO	CU, CD	4mA,8mA,12mA,16mA	0
	1	EDICK	IO	CU, CD	4mA,8mA,12mA,16mA	0
	3	BPI_BUS5	O	CU, CD	4mA,8mA,12mA,16mA	0
EDIDAT	0	GPIO62	IO	CU, CD	4mA,8mA,12mA,16mA	0

MediaTek Confidential Release for Cenon WCA

This document contains information that is proprietary to MediaTek Inc.

Unauthorized reproduction or disclosure of this information in whole or in part is strictly prohibited.

Name	Aux. Function	Aux. Name	Aux. Type	PU/PD/ CU/CD	Driving	SMT
	1	EDIDAT	IO	CU, CD	4mA,8mA,12mA,16mA	0
	3	BPI_BUS6	O	CU, CD	4mA,8mA,12mA,16mA	0
EDI_WS	0	GPIO63	IO	CU, CD	4mA,8mA,12mA,16mA	0
	1	EDI_WS	IO	CU, CD	4mA,8mA,12mA,16mA	0
	3	BPI_BUS6	O	CU, CD	4mA,8mA,12mA,16mA	0
SCK	0	GPIO64	IO	CU, CD	2mA, 6mA, 8mA, 10mA, 12mA , 14mA, 16mA, 18mA	0/1
	1	SCK	O	CU, CD	2mA, 6mA, 8mA, 10mA, 12mA , 14mA, 16mA, 18mA	0/1
	2	LSCK	O	CU, CD	2mA, 6mA, 8mA, 10mA, 12mA , 14mA, 16mA, 18mA	0/1
SWP	0	GPIO65	IO	CU, CD	2mA, 6mA, 8mA, 10mA, 12mA , 14mA, 16mA, 18mA	0/1
	1	SWP	IO	CU, CD	2mA, 6mA, 8mA, 10mA, 12mA , 14mA, 16mA, 18mA	0/1
	2	LSCK	O	CU, CD	2mA, 6mA, 8mA, 10mA, 12mA , 14mA, 16mA, 18mA	0/1
SHOLD	0	GPIO66	IO	CU, CD	2mA, 6mA, 8mA, 10mA, 12mA , 14mA, 16mA, 18mA	0/1
	1	SHOLD	IO	CU, CD	2mA, 6mA, 8mA, 10mA, 12mA , 14mA, 16mA, 18mA	0/1
	2	LSCE0_B	O	CU, CD	2mA, 6mA, 8mA, 10mA, 12mA , 14mA, 16mA, 18mA	0/1
SCS	0	GPIO67	IO	CU, CD	2mA, 6mA, 8mA, 10mA, 12mA , 14mA, 16mA, 18mA	0/1
	1	SCS	O	CU, CD	2mA, 6mA, 8mA, 10mA, 12mA , 14mA, 16mA, 18mA	0/1
	2	LSCE1_B	O	CU, CD	2mA, 6mA, 8mA, 10mA, 12mA , 14mA, 16mA, 18mA	0/1
SIN	0	GPIO68	IO	CU, CD	2mA, 6mA, 8mA, 10mA, 12mA , 14mA, 16mA, 18mA	0/1
	1	SIN	IO	CU, CD	2mA, 6mA, 8mA, 10mA, 12mA , 14mA, 16mA, 18mA	0/1
	2	LSDI	I	CU, CD	-	0/1
	3	EINT3	I	CU, CD	-	0/1
SOUT	0	GPIO69	IO	CU, CD	2mA, 6mA, 8mA, 10mA, 12mA , 14mA, 16mA, 18mA	0/1
	1	SOUT	IO	CU, CD	2mA, 6mA, 8mA, 10mA, 12mA , 14mA, 16mA, 18mA	0/1
	2	LSDA	I	CU, CD	-	0/1
	3	EINT3	I	CU, CD	-	0/1
GPIO70	0	GPIO70	IO	CU, CD	2mA,4mA,6mA,8mA	0
	2	EINT4	I	CU, CD	2mA,4mA,6mA,8mA	0
	3	CLK32K	O	CU, CD	2mA,4mA,6mA,8mA	0
	4	CAM_SCL	IO	CU, CD	2mA,4mA,6mA,8mA	0
EA0	0	EA0	IO	CU, CD	2mA, 6mA, 8mA, 10mA, 12mA , 14mA, 16mA, 18mA	0/1
	1	LPA0	O	CU, CD	2mA, 6mA, 8mA, 10mA, 12mA , 14mA, 16mA, 18mA	0/1
	3	SEN2LCM_A0	O	CU, CD	2mA, 6mA, 8mA, 10mA,	0/1

MediaTek Confidential Release for Cenon Tech

This document contains information that is proprietary to MediaTek Inc.

Unauthorized reproduction or disclosure of this information in whole or in part is strictly prohibited.

Name	Aux. Function	Aux. Name	Aux. Type	PU/PD/ CU/CD	Driving	SMT
					12mA , 14mA, 16mA, 18mA	
EA1	0	EA0	IO	CU, CD	2mA, 6mA, 8mA, 10mA, 12mA , 14mA, 16mA, 18mA	0/1
	1	LRD_B	O	CU, CD	2mA, 6mA, 8mA, 10mA, 12mA , 14mA, 16mA, 18mA	0/1
EA2	0	EA0	IO	CU, CD	2mA, 6mA, 8mA, 10mA, 12mA , 14mA, 16mA, 18mA	0/1
	1	LWR_B	O	CU, CD	2mA, 6mA, 8mA, 10mA, 12mA , 14mA, 16mA, 18mA	0/1
	3	SEN2LCM_WR_B	O	CU, CD	2mA, 6mA, 8mA, 10mA, 12mA , 14mA, 16mA, 18mA	0/1
EA3	0	EA3	IO	CU, CD	2mA, 6mA, 8mA, 10mA, 12mA , 14mA, 16mA, 18mA	0/1
	1	NLD0	IO	CU, CD	2mA, 6mA, 8mA, 10mA, 12mA , 14mA, 16mA, 18mA	0/1
	2	LSCK	O	CU, CD	2mA, 6mA, 8mA, 10mA, 12mA , 14mA, 16mA, 18mA	0/1
	3	CAMDAT0	I	CU, CD	-	0/1
EA4	0	EA4	IO	CU, CD	2mA, 6mA, 8mA, 10mA, 12mA , 14mA, 16mA, 18mA	0/1
	1	NLD1	IO	CU, CD	2mA, 6mA, 8mA, 10mA, 12mA , 14mA, 16mA, 18mA	0/1
	2	LSA0	O	CU, CD	2mA, 6mA, 8mA, 10mA, 12mA , 14mA, 16mA, 18mA	0/1
	3	CAMDAT1	I	CU, CD	-	0/1
EA5	0	EA5	IO	CU, CD	2mA, 6mA, 8mA, 10mA, 12mA , 14mA, 16mA, 18mA	0/1
	1	NLD2	IO	CU, CD	2mA, 6mA, 8mA, 10mA, 12mA , 14mA, 16mA, 18mA	0/1
	2	LSDA	IO	CU, CD	2mA, 6mA, 8mA, 10mA, 12mA , 14mA, 16mA, 18mA	0/1
	3	CAMDAT2	I	CU, CD	-	0/1
EA6	0	EA6	IO	CU, CD	2mA, 6mA, 8mA, 10mA, 12mA , 14mA, 16mA, 18mA	0/1
	1	NLD3	IO	CU, CD	2mA, 6mA, 8mA, 10mA, 12mA , 14mA, 16mA, 18mA	0/1
	2	LSDI	I	CU, CD	-	0/1
	3	CAMDAT3	I	CU, CD	-	0/1
EA7	0	EA7	IO	CU, CD	2mA, 6mA, 8mA, 10mA, 12mA , 14mA, 16mA, 18mA	0/1
	1	NLD4	IO	CU, CD	2mA, 6mA, 8mA, 10mA, 12mA , 14mA, 16mA, 18mA	0/1
	3	CMDAT4	I	CU, CD	-	0/1
EA8	0	EA8	IO	CU, CD	2mA, 6mA, 8mA, 10mA, 12mA , 14mA, 16mA, 18mA	0/1
	1	NLD5	IO	CU, CD	2mA, 6mA, 8mA, 10mA, 12mA , 14mA, 16mA, 18mA	0/1
	3	CMDAT5	I	CU, CD	-	0/1
EA9	0	EA9	IO	CU, CD	2mA, 6mA, 8mA, 10mA, 12mA , 14mA, 16mA, 18mA	0/1
	1	NLD6	IO	CU, CD	2mA, 6mA, 8mA, 10mA,	0/1

MediaTek Confidential Release for Cenon WCX

This document contains information that is proprietary to MediaTek Inc.

Unauthorized reproduction or disclosure of this information in whole or in part is strictly prohibited.

Name	Aux. Function	Aux. Name	Aux. Type	PU/PD/ CU/CD	Driving	SMT
					12mA , 14mA, 16mA, 18mA	
	3	CMDAT6	I	CU, CD	-	0/1
EA10	0	EA10	IO	CU, CD	2mA, 6mA, 8mA, 10mA, 12mA , 14mA, 16mA, 18mA	0/1
	1	NLD7	IO	CU, CD	2mA, 6mA, 8mA, 10mA, 12mA , 14mA, 16mA, 18mA	0/1
	3	CMDAT7	I	CU, CD	-	0/1
EA11	0	EA11	IO	CU, CD	2mA, 6mA, 8mA, 10mA, 12mA , 14mA, 16mA, 18mA	0/1
	1	NLD8	IO	CU, CD	2mA, 6mA, 8mA, 10mA, 12mA , 14mA, 16mA, 18mA	0/1
EA12	0	EA12	IO	CU, CD	2mA, 6mA, 8mA, 10mA, 12mA , 14mA, 16mA, 18mA	0/1
	1	NLD9	IO	CU, CD	2mA, 6mA, 8mA, 10mA, 12mA , 14mA, 16mA, 18mA	0/1
	2	CMMCLK	O	CU, CD	2mA, 6mA, 8mA, 10mA, 12mA , 14mA, 16mA, 18mA	0/1
	3	CMMCLK	O	CU, CD	2mA, 6mA, 8mA, 10mA, 12mA , 14mA, 16mA, 18mA	0/1
EA13	0	EA13	IO	CU, CD	2mA, 6mA, 8mA, 10mA, 12mA , 14mA, 16mA, 18mA	0/1
	1	NLD10	IO	CU, CD	2mA, 6mA, 8mA, 10mA, 12mA , 14mA, 16mA, 18mA	0/1
	2	CAM_CSK	I	CU, CD	-	0/1
	3	CMPCLK	I	CU, CD	-	0/1
EA14	0	EA14	IO	CU, CD	2mA, 6mA, 8mA, 10mA, 12mA , 14mA, 16mA, 18mA	0/1
	1	NLD11	IO	CU, CD	2mA, 6mA, 8mA, 10mA, 12mA , 14mA, 16mA, 18mA	0/1
	2	CAM_CSD	I	CU, CD	-	0/1
	3	CAMHSYNC	I	CU, CD	-	0/1
EA15	0	EA15	IO	CU, CD	2mA, 6mA, 8mA, 10mA, 12mA , 14mA, 16mA, 18mA	0/1
	1	NLD12	IO	CU, CD	2mA, 6mA, 8mA, 10mA, 12mA , 14mA, 16mA, 18mA	0/1
	2	CMPDN	O	CU, CD	2mA, 6mA, 8mA, 10mA, 12mA , 14mA, 16mA, 18mA	0/1
	3	CAMVSYNC	I	CU, CD	-	0/1
ED6	0	ED6	IO	CU, CD	2mA, 6mA, 8mA, 10mA, 12mA , 14mA, 16mA, 18mA	0/1
	2	CMRST	O	CU, CD	2mA, 6mA, 8mA, 10mA, 12mA , 14mA, 16mA, 18mA	0/1
	3	LSCE1_B	O	CU, CD	2mA, 6mA, 8mA, 10mA, 12mA , 14mA, 16mA, 18mA	0/1
	4	SEN2LCM_CS_B	O	CU, CD	2mA, 6mA, 8mA, 10mA, 12mA , 14mA, 16mA, 18mA	0/1
	5	CAM_SDA	IO	CU, CD	2mA, 6mA, 8mA, 10mA, 12mA , 14mA, 16mA, 18mA	0/1
	6	LPCE1_B	O	CU, CD	2mA, 6mA, 8mA, 10mA, 12mA , 14mA, 16mA, 18mA	0/1
ED7	0	ED7	IO	CU, CD	2mA, 6mA, 8mA, 10mA,	0/1

MediaTek Confidential Release for Cenon Tech

This document contains information that is proprietary to MediaTek Inc.

Unauthorized reproduction or disclosure of this information in whole or in part is strictly prohibited.

Name	Aux. Function	Aux. Name	Aux. Type	PU/PD/ CU/CD	Driving	SMT
					12mA , 14mA, 16mA, 18mA	
	2	CMPDN	O	CU, CD	2mA, 6mA, 8mA, 10mA, 12mA , 14mA, 16mA, 18mA	0/1
	3	LPCE1_B	O	CU, CD	2mA, 6mA, 8mA, 10mA, 12mA , 14mA, 16mA, 18mA	0/1
	4	SEN2LCM_CS_B	O	CU, CD	2mA, 6mA, 8mA, 10mA, 12mA , 14mA, 16mA, 18mA	0/1
	5	CAM_SCL	IO	CU, CD	2mA, 6mA, 8mA, 10mA, 12mA , 14mA, 16mA, 18mA	0/1
	6	LSCE1_B	O	CU, CD	2mA, 6mA, 8mA, 10mA, 12mA , 14mA, 16mA, 18mA	0/1
URXD1	0	URXD1	I	PU	-	0
	1	EINT2	I	PU	-	0
	2	LSCK	O	PU	4mA,8mA,12mA,16mA	0
UTXD1	0	UTXD1	O	PU	4mA,8mA,12mA,16mA	0
	1	EINT3	I	PU	4mA,8mA,12mA,16mA	0
	2	LSDA	IO	PU/CD	4mA,8mA,12mA,16mA	0

Table 7 Pin multiplexing, capability and settings

2.2 Electrical Characteristics

2.2.1 Absolute Maximum Ratings

Prolonged exposure to absolute maximum ratings may reduce device reliability. Functional operation at these maximum ratings is not implied.

Pin Name	Description	Min	Max	Unit
VBAT_DIGITAL, VBAT_ANALOG, VBAT_SPK, VBAT_RF	Battery regulator supply voltage	-0.3	+4.73	V
VDD33	Regulated digital I/O supply voltage	-0.3	+3.63	V
VUSB	Regulated USB supply voltage	-0.3	+3.63	V
DVDD33_EMI	Regulated memory supply voltage	-0.3	+3.63	V
DVDD33_SF	Regulated serial flash supply voltage	-0.3	+3.63	V

MediaTek Confidential Release for Cenon WCX

This document contains information that is proprietary to MediaTek Inc.

Unauthorized reproduction or disclosure of this information in whole or in part is strictly prohibited.

VDD33_MSDC	Regulated memory card supply voltage	-0.3	+3.63	V
VDDK	Regulated digital circuit supply voltage	-0.3	+1.65	V
AVDD28_MBUF, AVDD28_RFE, AVDD28_AFE, AVDD28_PLL, AVDD_RTC	Regulated analog circuit supply voltage	-0.3	+3.63	V
AVDD28_RF1, AVDD28_RF2, AVDD28_TCXO, AVDD28_RFD	Regulated RF circuit supply voltage	-0.3	+3.63	V

Warning: Stressing the device beyond the Absolute Maximum Ratings may cause permanent damage. These are stress ratings only.

Symbol	Description	Min	Max	Unit
Tstg	Storage temperature	-55	+125	Celsius

2.2.2 Recommended Operating Conditions

Pin Name	Description	Min	Max	Unit
VBAT_DIGITAL, VBAT_ANALOG, VBAT_SPK, VBAT_RF	Battery regulator supply voltage		+4.3	V
VDD33	Regulated digital I/O supply voltage	+2.7	+2.9	V
VUSB	Regulated USB supply voltage	+2.97	+3.63	V
DVDD33_EMI	Regulated supply voltage for memory	+1.7	+1.95	V
DVDD33_SF	Regulated supply voltage for serial flash	+1.7(+1.65?)	+3.6	V
VDD33_MSDC	Regulated supply voltage for SD card	+2.7	+3.6	V
VDDK	Regulated digital circuit supply voltage	+1.08	+1.32	V
AVDD28_MBUF, AVDD28_RFE, AVDD28_AFE, AVDD28_PLL, AVDD_RTC	Regulated analog supply voltage	+2.7	+2.9	V

MediaTek Confidential Release for Cenon WCX

This document contains information that is proprietary to MediaTek Inc.

Unauthorized reproduction or disclosure of this information in whole or in part is strictly prohibited.

AVDD28_RF1, AVDD28_RF2, AVDD28_TCXO, AVDD28_RFD	Regulated RF circuit supply voltage	+2.7	+2.9	V

Warning: Operation beyond the Operating Conditions is not recommended. Extended exposure may affect device reliability.

Symbol	Description	Min	Max	Unit
Topr	Operating temperature	-20	+80	Celsius

2.2.3 Serial Flash Interface

Symbol	Description		Min.	Typ.	Max.	Unit
fSCLK	Clock frequency for supporting serial flash				104	MHz
tSLCH	/CS active setup time (relative to SCLK)			5		ns
tSHSL	/CS deselect time			10		ns
tCHSL	/CS not active hold time (relative to SCLK)			5		ns
tDVCH	Data in setup time			3		ns
tCHSH	/CS active hold time (relative to SCLK)			5		ns
tSHCH	/CS not active setup time (relative to SCLK)			5		ns
tCLQV	Clock Low to Output Valid Loading: 30pF / 15pF	Loading :30pF			8	ns
		Loading :15pF			6	ns
tCH	Clock high time			4.5		ns
tCL	Clock low time			4.5		ns

Table 8 Serial Flash AC Characteristics

MediaTek Confidential Release for Cenon WCX

This document contains information that is proprietary to MediaTek Inc.

Unauthorized reproduction or disclosure of this information in whole or in part is strictly prohibited.

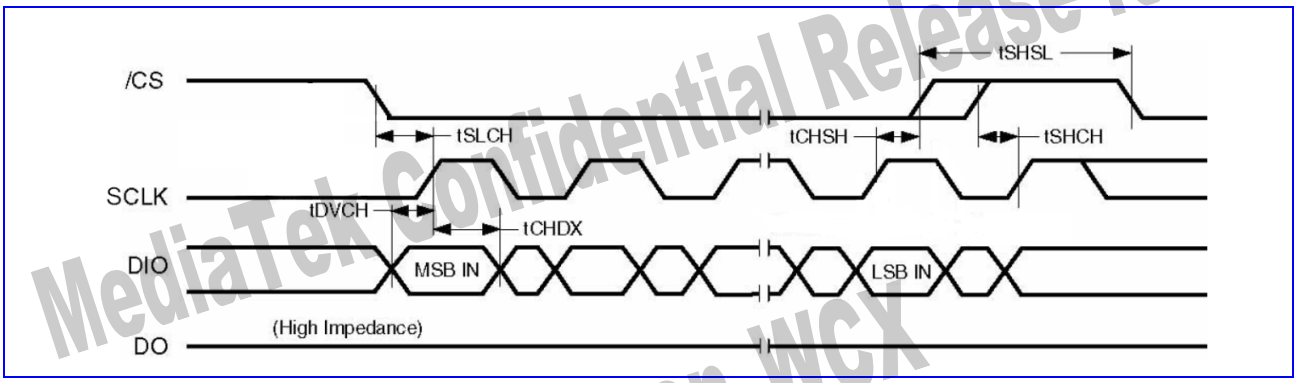

Figure 4 Serial Flash write timing

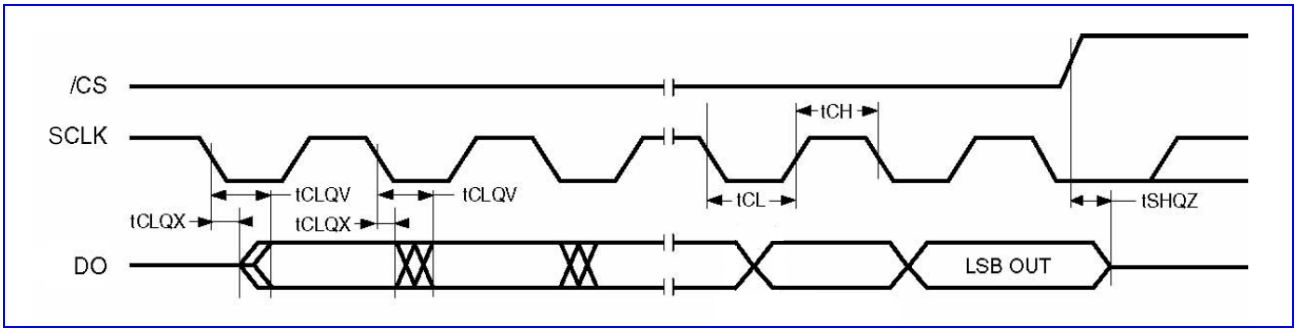

Figure 5 Serial Flash read timing

2.3 System Configurations

2.3.1 Strapping Resistors

Pin Name	Description	Trapping Condition
DIASYNC	Pull-up with 100K resistor	Reset
PWM	Pull-down with 100K resistor	(GPIO_MODE0==2)
DAIRST	Pull-up with 100K resistor	Reset

Table 9 Strapping table

MediaTek Confidential Release for Cenon WCX

This document contains information that is proprietary to MediaTek Inc.

Unauthorized reproduction or disclosure of this information in whole or in part is strictly prohibited.

2.3.2 Constant Tied Pins

Pin Name	Tie Value
TESTMODE	GND
PMU_TESTMODE	GND

2.4 Power-on Sequence

The power-on/off sequence which is controlled by “Control” and “Reset Generator” is shown as follows,

MediaTek Confidential Release for Cenon WCX

MediaTek Confidential Release for Cenon WCX

This document contains information that is proprietary to MediaTek Inc.

Unauthorized reproduction or disclosure of this information in whole or in part is strictly prohibited.

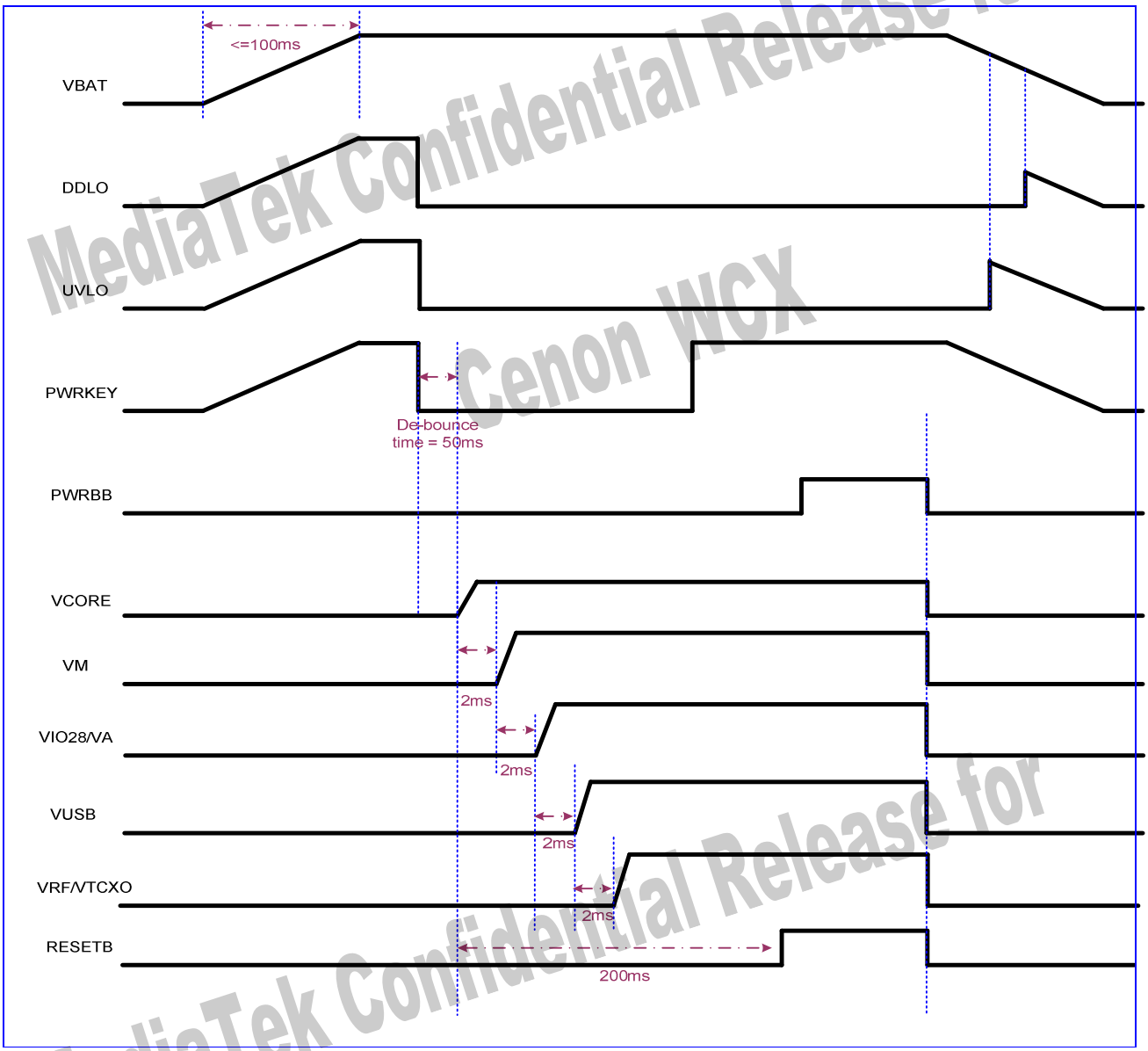

Figure 6 Power-on/off Control Sequence

Note that the above figure only shows one power-on/off condition. The MT6252 handles the powering ON and OFF of the handset. Use the following three ways to switch on the handset (When VBAT ≥ 3.2 V):

MediaTek Confidential Release for Cenon WCX

This document contains information that is proprietary to MediaTek Inc.

Unauthorized reproduction or disclosure of this information in whole or in part is strictly prohibited.

- Pulling PWRKEY low (User push PWRKEY)
- Pulling PWRBB high (Baseband BB_WakeUp)
- Valid charger plug-in

Pulling PWRKEY low is a normal way to turn on the handset. That will turn on VCORE, VIO, VM, VA and VUSB as long as the PWRKEY is kept low. The VRF and VTCXO are turned on when SRCLKEN is high. The microprocessor then starts and pulls PWRBB high. After that, PWRKEY can be released. Pulling PWRBB high will also turn on the handset. This is the case when the alarm in the RTC expires.

In addition, applying a valid external supply on CHRIN will also turn on the handset. However, If the battery is in UV state (VBAT < 3.2 V), the handset cannot be turned on.

The UVLO function of MT6252 prevents system startup when the initial voltage of the main battery is below the 3.2 V threshold. When the battery voltage is greater than 3.2 V, the UVLO comparator switches and the threshold is reduced to 2.9 V. This allows the handset to start smoothly unless the battery decays to 2.9 V and below.

Once the MT6252 enters the UVLO state, it draws a very low quiescent current. The VRTC LDO is still active until the DDLO disables it.

MediaTek Confidential Release for Cenon WCX
MediaTek Confidential Release for Cenon WCX

This document contains information that is proprietary to MediaTek Inc.

Unauthorized reproduction or disclosure of this information in whole or in part is strictly prohibited.

2.5 Analog Baseband

2.5.1 Audio Mixed-signal Blocks

2.5.1.1 Block Descriptions

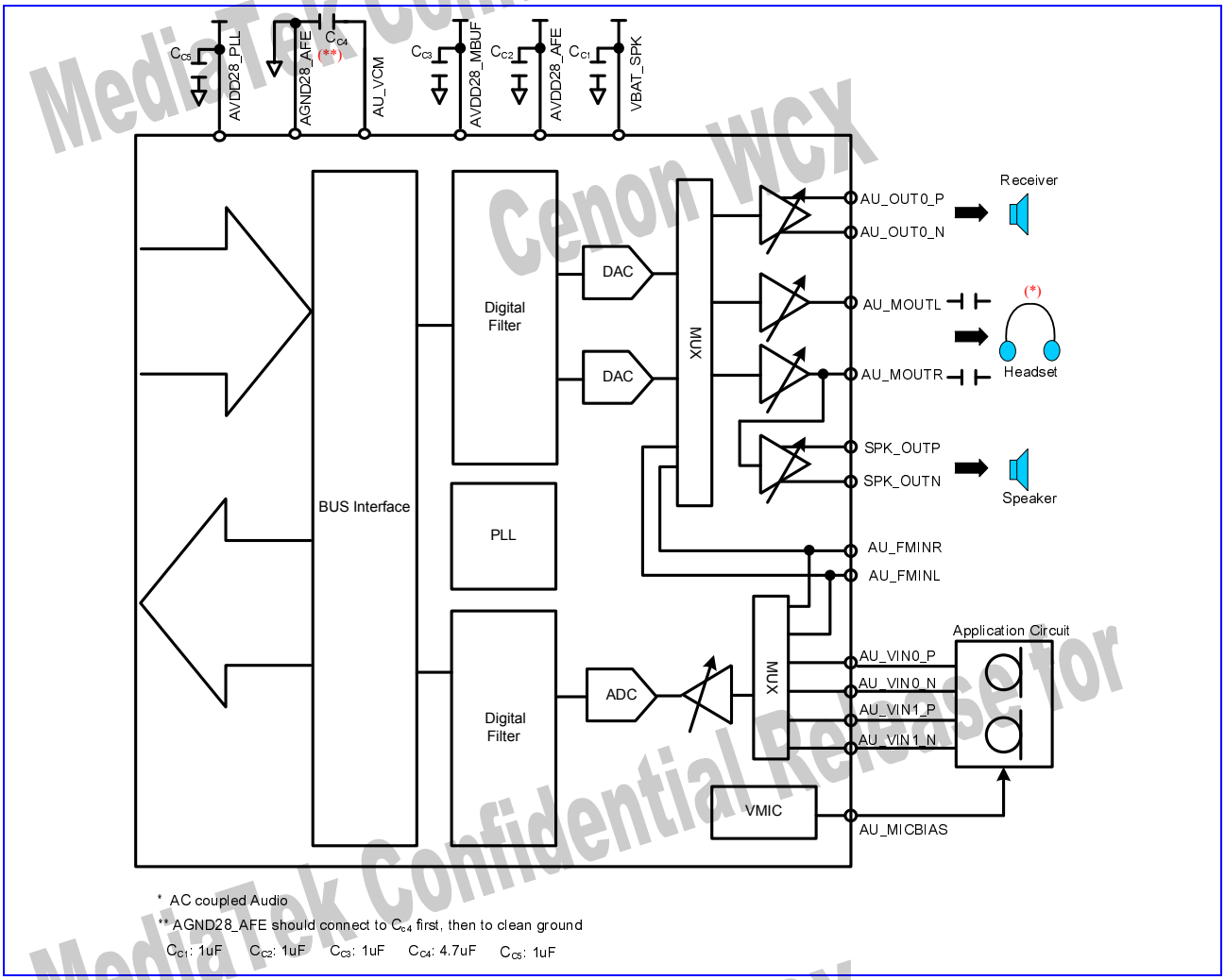

Figure 7 Block diagram of audio/speech part

MediaTek Confidential Release for Cenon WCX

This document contains information that is proprietary to MediaTek Inc.

Unauthorized reproduction or disclosure of this information in whole or in part is strictly prohibited.

2.5.1.2 Functional Specification

The following table provides functional specifications of voice-band uplink/downlink blocks.

Symbol	Description	Min.	Typ.	Max.	Unit
AVDD	Power Supply (AVDD28_MBUF, AVDD28_AFE, AVDD28_PLL)	2.7	2.8	2.9	V
VMIC	Microphone Biasing Voltage		1.9	2.2	V
Uplink Path					
SINAD	Signal to Noise and Distortion Ratio Input Level: -40 dbm0 Input Level: 0 dbm0	29	69		dB dB
RIN	Input Impedance (Differential)	13	20	27	KΩ
Downlink Path					
SINAD	Signal to Noise and Distortion Ratio Input Level: -40 dBm0 Input Level: 0 dBm0	29	69		dB dB
RLOAD	Output Resistor Load (Differential)		32		Ω
CLOAD	Output Capacitor Load			200	pF

Table 10 Functional specifications of analog voice blocks

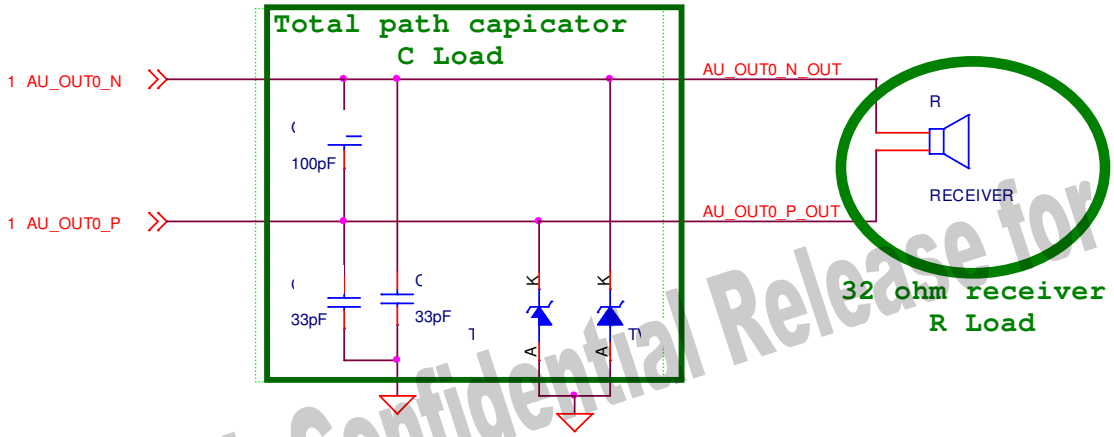

Functional specifications of the audio blocks are described in the following.

Symbol	Description	Min.	Typ.	Max.	Unit
Fs	Sampling Rate	32	44.1	48	KHz
AVDD	Power Supply (AVDD28_MBUF, AVDD28_AFE,	2.6	2.8	3.0	V

MediaTek Confidential Release for Cenon WCX

This document contains information that is proprietary to MediaTek Inc.

Unauthorized reproduction or disclosure of this information in whole or in part is strictly prohibited.

	AVDD28_PLL)				
PSNR	Peak Signal to Noise Ratio		88		dB
VOUT	Output Swing for 0dBFS Input Level		0.64		Vrms
THD	Total Harmonic Distortion 22mW at 32 Ω Load		-70		dB
RLOAD	Output Resistor Load (Single-ended)		32		Ω
CLOAD	Output Capacitor Load			200	pF

Table 11 Functional specifications of the analog audio blocks

2.5.2 BBRX

2.5.2.1 Functional Specification

The receiver (RX) performs base-band I/Q channels downlink analog-to-digital conversion:

1. *Analog input multiplexer:* For each channel, a 4-input multiplexer that supports offset and gain calibration is included.
2. *A/D converter:* Two 14-bit sigma-delta ADCs perform I/Q digitization for further digital signal processing.

Symbol	Description	Min.	Typ.	Max.	Unit
N	Resolution		14		Bit
FC	Clock Rate		26		MHz
FS	Output Sampling Rate		13/12		MSPS
SINAD	Signal to Noise and Distortion Ratio - 45kHz sine wave in [0:90] kHz bandwidth - 145kHz sine wave in [10:190] kHz bandwidth	65 65			dB dB
ICN	Idle channel noise - [0:90] kHz bandwidth - [10:190] kHz bandwidth			-74 -70	dB dB
DR	Dynamic Range - [0:90] kHz bandwidth - [10:190] kHz bandwidth	74 70			dB dB
RIN	Input Resistance	75			kΩ
DVDD	Digital Power Supply	1.08	1.2	1.32	V
AVDD	Analog Power Supply (AVDD_RFE)	2.7	2.8	2.9	V
T	Operating Temperature	-20		80	℃
	Current Consumption Power-up Power-down		5 5		mA μA

Table 12 Base-band Downlink Specifications

MediaTek Confidential Release for Canon WCX

This document contains information that is proprietary to MediaTek Inc.

Unauthorized reproduction or disclosure of this information in whole or in part is strictly prohibited.

2.5.3 Auxiliary ADC / Touch Screen Controller

2.5.3.1 Block Descriptions

The auxiliary ADC includes the following functional blocks:

1. *Analog Multiplexer:* The analog multiplexer selects signal from one of the several auxiliary input pins. Real world messages to be monitored, such as the temperature, should be transferred to the voltage domain.
2. *10-bit A/D Converter:* The ADC converts the multiplexed input signal to 10-bit digital data.

Touch Screen Interface can control input pads (XP, XM, YP, and YM) to obtain X/Y-position on the external touch screen device. Touch Screen Interface contains three main blocks; which are touch screen pads control logic, ADC interface logic and interrupt generation logic.

AuxADC Channel ID	Description
Channel 0	Internal use
Channel 1	Internal use
Channel 2	Internal use
Channel 3	Internal use
Channel 4	External (AUX_IN4)
Channel 5	External (AUX_IN5)
Channel 6	Internal use
Channel 7	Internal use
Channel 8	Internal use
Channel 9	Internal use
Channel 10	Internal use
Channel 11	Internal use
Channel 12	Internal use
Channel 13	Internal use
Channel 14	Internal use
Channel 15	Internal use

Table 13 AuxADC channel list

MediaTek Confidential Release for Cenon WCX

This document contains information that is proprietary to MediaTek Inc.

Unauthorized reproduction or disclosure of this information in whole or in part is strictly prohibited.

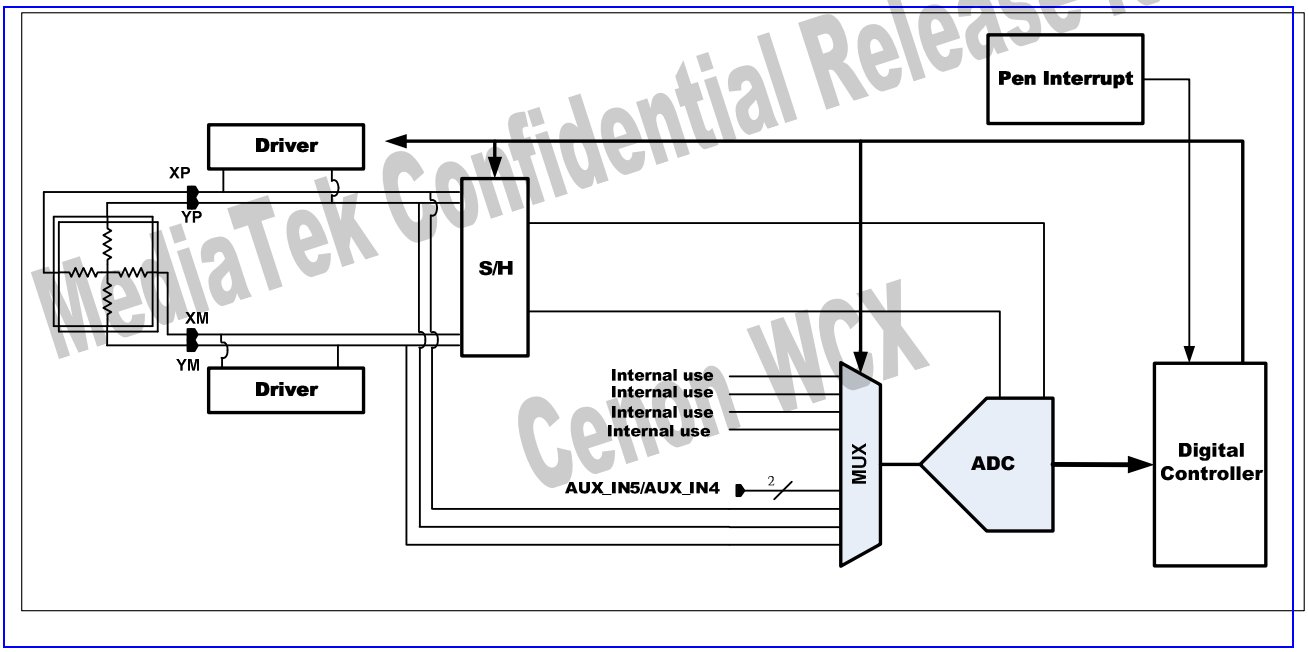

Figure 8 Block diagram of AuxADC and touch screen

2.5.3.2 Function Specifications

The functional specifications of the auxiliary ADC are listed in the following table.

Symbol	Description	Min.	Typ.	Max.	Unit
N	Resolution		10		Bit
FC	Clock Rate		1.0833		MHz
FS	Sampling Rate @ N-Bit		1.0833/(N+1)		MSPS
	Input Swing	0		AVDD	V
CIN	Input Capacitance Unselected Channel Selected Channel			 50 1.2	 fF pF
RIN	Input Resistance Unselected Channel Selected Channel	 10 1.8			 MΩ MΩ
	Clock Latency		11		1/FC
DNL	Differential Nonlinearity		+1.0/-1.0		LSB

MediaTek Confidential Release for Cenon WCX

This document contains information that is proprietary to MediaTek Inc.

Unauthorized reproduction or disclosure of this information in whole or in part is strictly prohibited.

INL	Integral Nonlinearity		+1.0/-1.0		LSB
DVDD	Digital Power Supply	1..08	1.2	1.32	V
AVDD	Analog Power Supply (AVDD_RFE)	2.7	2.8	2.9	V
T	Operating Temperature	-20		80	℃
	Current Consumption Power-up Power-Down		 150 1		 μA μA
Ztp	Supported Touch Panel Impedance	200		2K	Ohm

Table 14 The Functional specification of Auxiliary ADC

2.5.4 32-KHz Crystal Oscillator (RTC)

The low-power 32-KHz crystal oscillator XOSC32 is designed to work with an external piezoelectric 32.768KHz crystal and a load composed of two functional capacitors, as shown in the following figure.

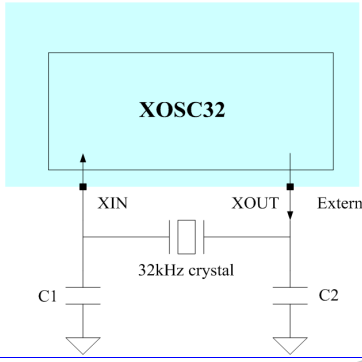

Figure 9 Block diagram of XOSC32

The functional specification of XOSC32 is shown in the following table.

Symbol	Description	Min.	Typ.	Max.	Unit
AVDDRTC	Analog power supply	1.0	2.8	3.0	V
Tosc	Start-up time			1	sec
Dcyc	Duty cycle	20	50	80	%
	Current consumption			5	μA
	Leakage current		1		μA
T	Operating temperature	-20		80	℃

MediaTek Confidential Release for Cenon WCX

This document contains information that is proprietary to MediaTek Inc.

Unauthorized reproduction or disclosure of this information in whole or in part is strictly prohibited.

Table 15 Functional specification of XOSC32

Following are a few recommendations for the crystal parameters to be used with XOSC32.

Symbol	Description	Min.	Typ.	Max.	Unit
F	Frequency range		32768		Hz
GL	Drive level			5	uW
Δf/f	Frequency tolerance		+/- 20		ppm
ESR	Series resistance			50	KΩ
C0	Static capacitance			1.6	pF
C1/C2	Load capacitance	6		12.5	pF

Table 16 Recommended parameters of the 32 kHz crystal

2.5.5 APC DAC

2.5.5.1 Block Descriptions

The APC-DAC is a 10-bit DAC with an output buffer aiming for automatic power control. Following is the functional specification table.

2.5.5.2 Function Specifications

Symbol	Parameter	Min	Typical	Max	Unit
N	Resolution		10		Bit
FS	Sampling Rate			1.0833	MSPS
	Output Swing	0		AVDD	V
	Drive Capacitance		200		pF
	Drive Resistance		10		kΩ
DNL	Differential Nonlinearity		+/- 1.0		LSB
INL	Integral Nonlinearity		+/- 1.0		LSB
DVDD	Digital Power Supply	1.08	1.2	1.32	V
AVDD	Analog Power Supply (AVDD_RFE)	2.7	2.8	2.9	V

MediaTek Confidential Release for Cenon WCX

This document contains information that is proprietary to MediaTek Inc.

Unauthorized reproduction or disclosure of this information in whole or in part is strictly prohibited.

T	Operating Temperature	-20		80	℃
	Current Consumption Power-up Power-Down		 200 1		 µA µA

Table 17 APC-DAC specifications

2.6 PMU

Power management unit (PMU), is integrated into analog part. Following is the PMU block diagram.

MediaTek Confidential Release for Cenon WCX

This document contains information that is proprietary to MediaTek Inc.

Unauthorized reproduction or disclosure of this information in whole or in part is strictly prohibited.

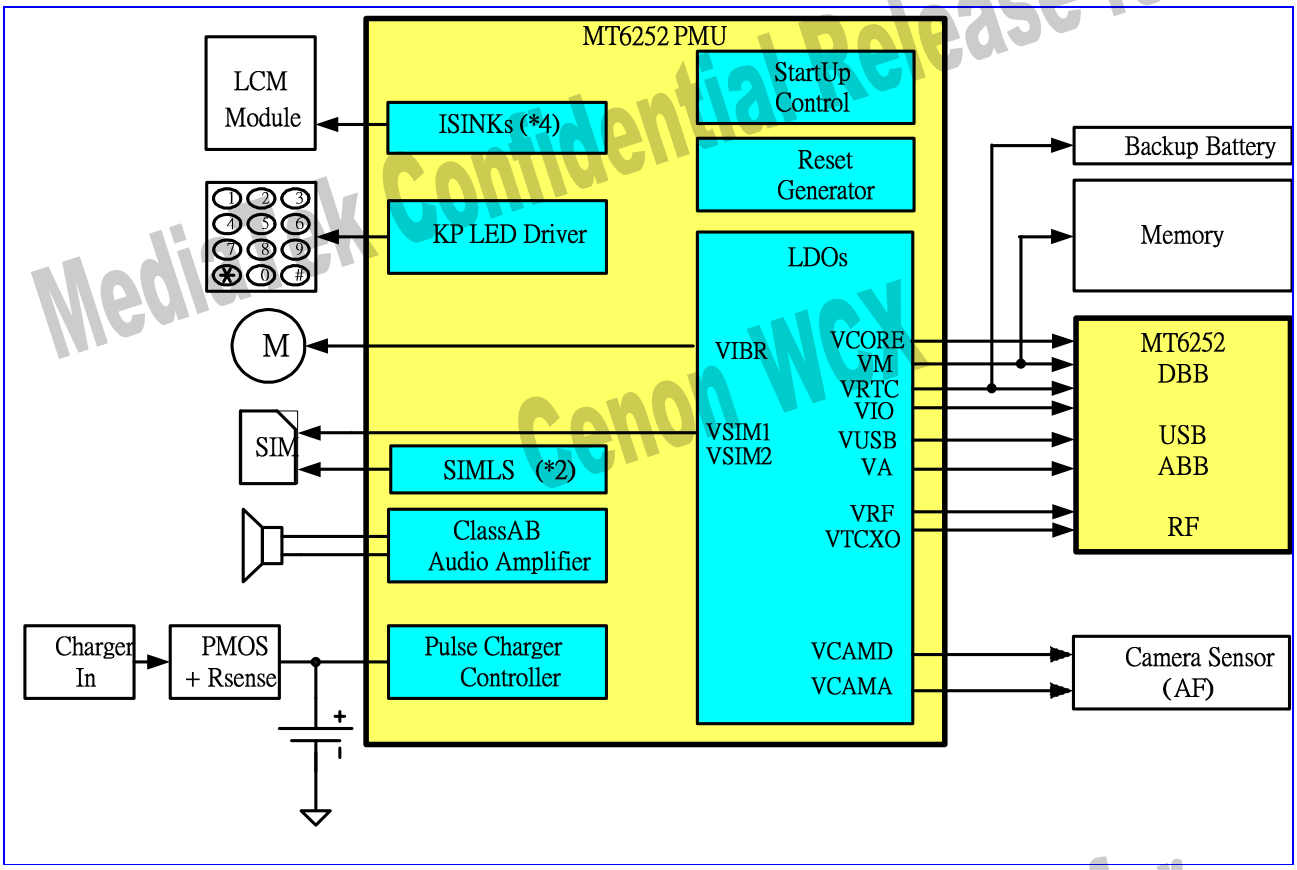

Figure 10 PMU system block diagram

2.6.1 Low Dropout Regulators (LDOs), and Reference

The PMU Integrates 13 LDOs that are optimized for their given functions by balancing quiescent current, dropout voltage, line/load regulation, ripple rejection, and output noise.

MediaTek Confidential Release for Cenon WCX

This document contains information that is proprietary to MediaTek Inc.

Unauthorized reproduction or disclosure of this information in whole or in part is strictly prohibited.

2.6.1.1 Block Description

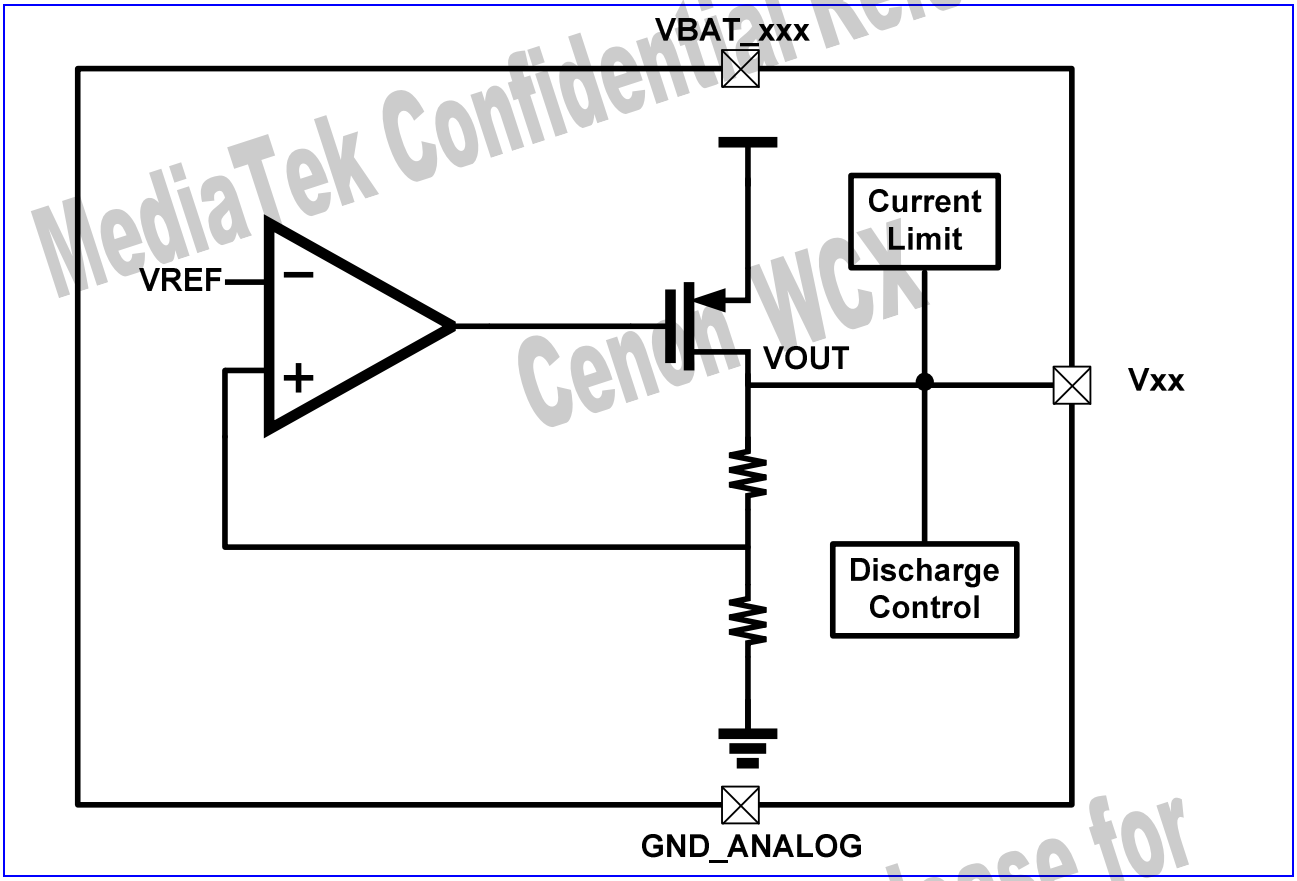

Figure 11 LDO block diagram

2.6.1.2 LDO Types

Type	LDO Name	Vout	Imax	Description
ALDO	VRF	2.8	150	RF circuit
ALDO	VA	2.8	100	Analog baseband
ALDO	VTCXO	2.8	40	13/26 MHz reference clock

MediaTek Confidential Release for Cenon WCX

This document contains information that is proprietary to MediaTek Inc.

Unauthorized reproduction or disclosure of this information in whole or in part is strictly prohibited.

Type	LDO Name	Vout	Imax	Description
ALDO	VCAMA	1.5/1.8/2.5/2.8	150	Analog camera power
DLDO	VCORE	0.8V~1.35V(25mv/step)	200	Digital core
DLDO	VIO	2.8	200	Digital IO
DLDO	VM	1.8/2.9	150	External memory, selectable
DLDO	VSIM1	1.8/3.0	30	SIM card, selectable
DLDO	VSIM2	1.3/1.5/1.8/2.5/2.8/3.0/3.3	30	SIM2 card, selectable
DLDO	VUSB	3.3	50	USB
DLDO	VIBR	1.3/1.5/1.8/2.5/2.8/3.0/3.3	150	Vibrator
DLDO	VCAMD	1.3/1.5/1.8/2.5/2.8/3.0/3.3	100	Digital camera power
RTCLDO	VRTC	2.8	2	Real-time clock

Table 18 LDO types and brief specification

2.6.1.3 Functional Specification

Symbol	Description	Condition	Min.	Typ.	Max.	Unit
	Load capacitor(VA/VTCXO)			1		µF
	Load capacitor(VRF/VCAMA)			2.2		µF
	Current limit		1.2*Imax		5*Imax	mA
	Vout	Including load regulation, line regulation, and temperature coefficient	max(-5%, -0.1V)		max(+5% , +0.1V)	V
	Transient response	Slew: 15mA/us	-0.1		+0.1	V
	Temperature coefficient				100	ppm/C
	PSRR	Iout<0.5*Imax 217<f<3K Hz	65			dB
		Iout<0.5*Imax 3K<f<30K Hz	45			dB
	Output noise	10 to 80K Hz		90		uVrms
	Quiescent current	Iout=0			55	µA
	Turn-on overshoot	Iout=0			max(+10 %, +0.1V)	V
	Turn-on settling time	Iout=0			360	µS

Table 19 Analog LDO Specification

MediaTek Confidential Release for Cenon WCX

This document contains information that is proprietary to MediaTek Inc.

Unauthorized reproduction or disclosure of this information in whole or in part is strictly prohibited.

Symbol	Description	Condition	Min.	Typ.	Max.	Unit
	Load capacitor(except VIO)			1		µF
	Load capacitor(VIO)			2.2		µF
	Current limit(except VCAMD)		1.2*Imax		5*Imax	mA
	Current limit(VCAMD)		2*Imax		8*Imax	mA
	Vout	Include load regulation, line regulation, and temperature coefficient	max(-5%, -0.1V)		max(+5% , +0.1V)	V
	Transient response	Slew: 15mA/us	max(-5%, -0.1V)		max(+5% , +0.1V)	V
	Temperature coefficient				100	ppm/C
	Output noise	10 to 80K Hz		250	500	uVrms
	Quiescent current	Iout=0			15	µA
	Turn-on overshoot	Iout=0			max(+10 %, +0.1V)	V
	Turn-on settling time(except VIO)	Iout=0			360	µs
	Turn-on settling time(VIO)	Iout=0			40	µs

Table 20 Digital LDO Specification

MediaTek Confidential Release for Cenon WCX

This document contains information that is proprietary to MediaTek Inc.

Unauthorized reproduction or disclosure of this information in whole or in part is strictly prohibited.

2.6.2 SIM Interface

2.6.2.1 Block Description

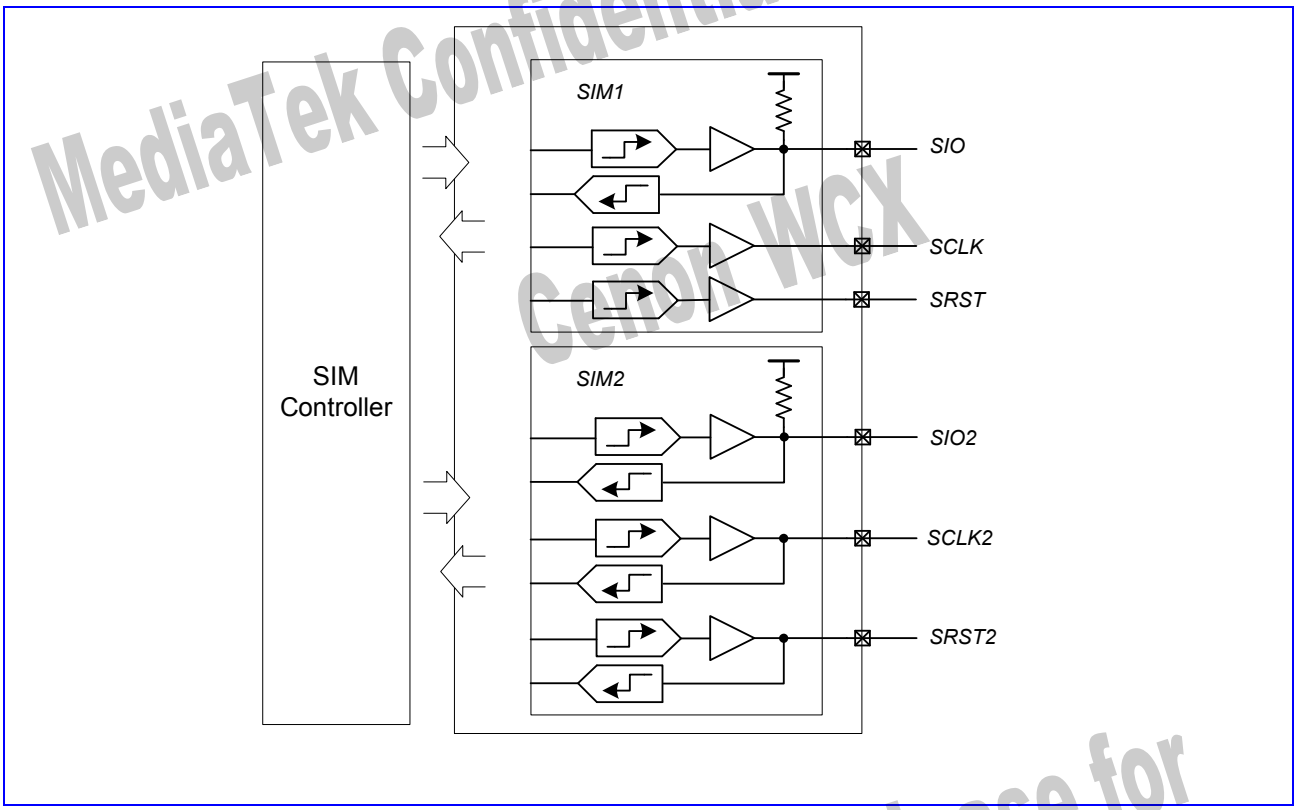

Figure 12 SIM interface block diagram

There are two SIM card interface modules to support two SIM cards simultaneously. The SIM card interface circuitry of PMU meets all ETSI and IMT-2000 SIM interface requirements. It provides level shifting needs for the low voltage GSM controller to communicate with either 1.8 V or 3 V SIM cards. All SIM cards contain a clock input, a reset input, and a bi-directional data input/output. The clock and reset inputs to SIM cards are level shifted from the supply of digital baseband to the SIM supply (Vsim). The bi-directional data bus is internal pull high to Vsim via 5 kΩ resistor.

The 2nd SIM card interface can be used for supporting another SIM card or mobile TV. The interface pins such as SIO2, SRST2, SCLK2, can be configured as GPIO when there is no need to use the 2nd SIM card interface.

MediaTek Confidential Release for Cenon WCX

This document contains information that is proprietary to MediaTek Inc.

Unauthorized reproduction or disclosure of this information in whole or in part is strictly prohibited.

All pins that connect to the SIM card (Vsim, SRST, SCLK, SIO) withstand over 2kV HBM (human body mode) ESD. In order to ensure proper ESD protection, careful board layout is required.

2.6.2.2 Functional Specification

Symbol	Description	Condition	Min.	Typ.	Max.	Unit
Interface to 3 V SIM Card						
	Output Low of SRST	I = 200 µA			0.36	V
	Output High of SRST	I = -200 µA	0.9*VSIM			V
	Output Low of SCLK	I = 200 µA			0.4	V
	Output High of SCLK	I =-100 µA	0.9*VSIM			V
	Input/Output High of SIO	I = ±20 µA	VSIM-0.4			V
	(Iil)Pull high current of SIO	Vil = 0 V			-1	mA
	(Vol)Input/Output Low of SIO	Iol = 1 mA			0.4	V
Interface to 1.8 V SIM Card						
	Output Low of SRST	I = 200 µA			0.2*VSIM	V
	Output High of SRST	I = -200 µA	0.9*VSIM			V
	Output Low of SCLK	I = 200 µA			0.12*VSIM	V
	Output High of SCLK	I = -100 µA	0.9*VSIM			V
	Input/Output Low of SIO				0.15*VSIM	V
	Input/Output High of SIO	I = ±20 µA	VSIM-0.4			V
	(Iil)Pull high current of SIO	Vil = 0 V			-1	mA
	(Vol)Input/Output Low of SIO	Iol = 1 mA			0.15*VSIM	V
SIM Card Interface Timing						
	SIO pull-up resistance to VSIM		4	5	6	kΩ
	SRST, SIO rise/fall times	VSIM = 3, 1.8 V, load with 30 pF			1	µs
	SCLK rise/fall times	VSIM = 3 V, CLK load with 30 pF			18	ns
		VSIM = 1.8 V, CLK load with 30 pF			50	ns
	SCLK frequency	CLK load with 30 pF			5	MHz
	SCLK duty cycle	SIMCLK Duty = 50%, fsimclk = 5 MHz	47		53	%

Table 21 SIM Level Shifter

MediaTek Confidential Release for Cenon WCX

This document contains information that is proprietary to MediaTek Inc.

Unauthorized reproduction or disclosure of this information in whole or in part is strictly prohibited.

2.6.3 Current Sink Driver and Keypad LED Switches

2.6.3.1 Block Description

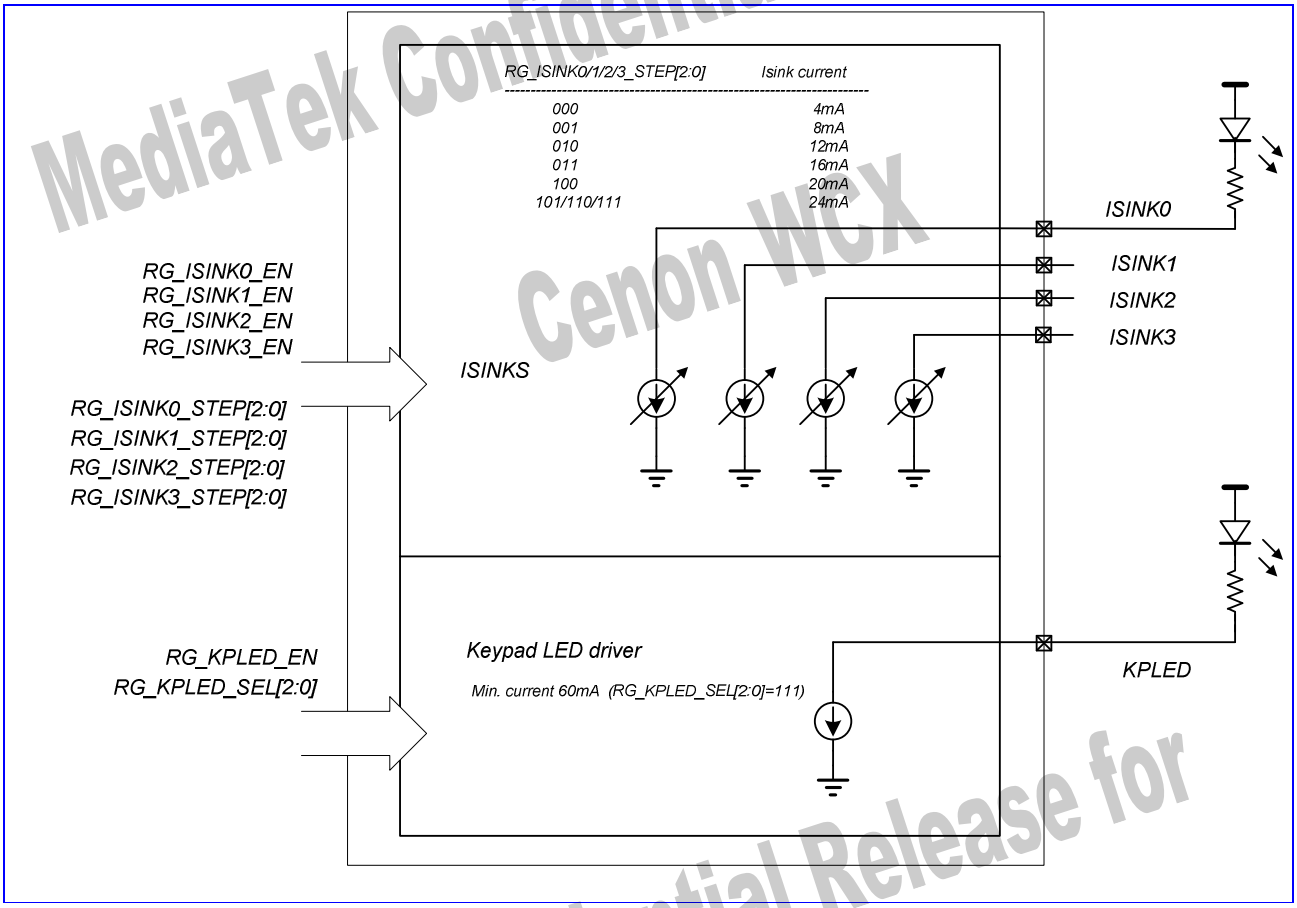

Figure 13 Current sink and keypad LED driver block diagram

2.6.3.2 Functional Specification

Four current controlled open drain drivers (Isink0~3) are also implemented to drive LCM backlight module and each provides 6 current level steps up to 24 mA. These current sinks are controlled by enabling registers (RG_ISINK0~3_EN). The impedance output is high when disabled. The sink current can be set by RG_ISINK0~3_STEP[2:0] from 000 (4 mA)

MediaTek Confidential Release for Cenon WCX

This document contains information that is proprietary to MediaTek Inc.

Unauthorized reproduction or disclosure of this information in whole or in part is strictly prohibited.

to 101 (24 mA) at 4 mA per step. Also, the drivers can be switching on/off through dimming control. The dimming frequency and duty can be programmed by registers. For details, please refer to the "PWM" section.

Built-in open-drain output switches drive the Keypad LED in the handset. This driver is controlled by baseband with enable registers (RG_KPLED_EN), and the output is high impedance when disabled. The Keypad LED connects its anode to VBAT and its cathode to the ballast resistor. The other terminal of the ballast resistor connects to the driver of MT6252. The Keypad LED driver is a low Ron switch which allows 60mA current.

The brightness of the Keypad LED can be controlled by changing the external ballast resistor or switching on/off the driver through dimming control. The dimming frequency and duty can be programmed by registers. For the details, please refer to the "PWM" section.

Symbol	Description	Condition	Min.	Typ.	Max.	Unit
	Sink current of Keypad LED Driver	Von<0.5V, 100% dimming duty	60			mA
	Sink current of ISINK0~3	Von<0.3V, 100% dimming duty		24		mA

Table 22 KP LED functional specification

2.6.4 Battery Charge

2.6.4.1 Block Description

The charger circuit in MT6252 is shown as in the following block diagram.

MediaTek Confidential Release for Cenon WCX

This document contains information that is proprietary to MediaTek Inc.

Unauthorized reproduction or disclosure of this information in whole or in part is strictly prohibited.

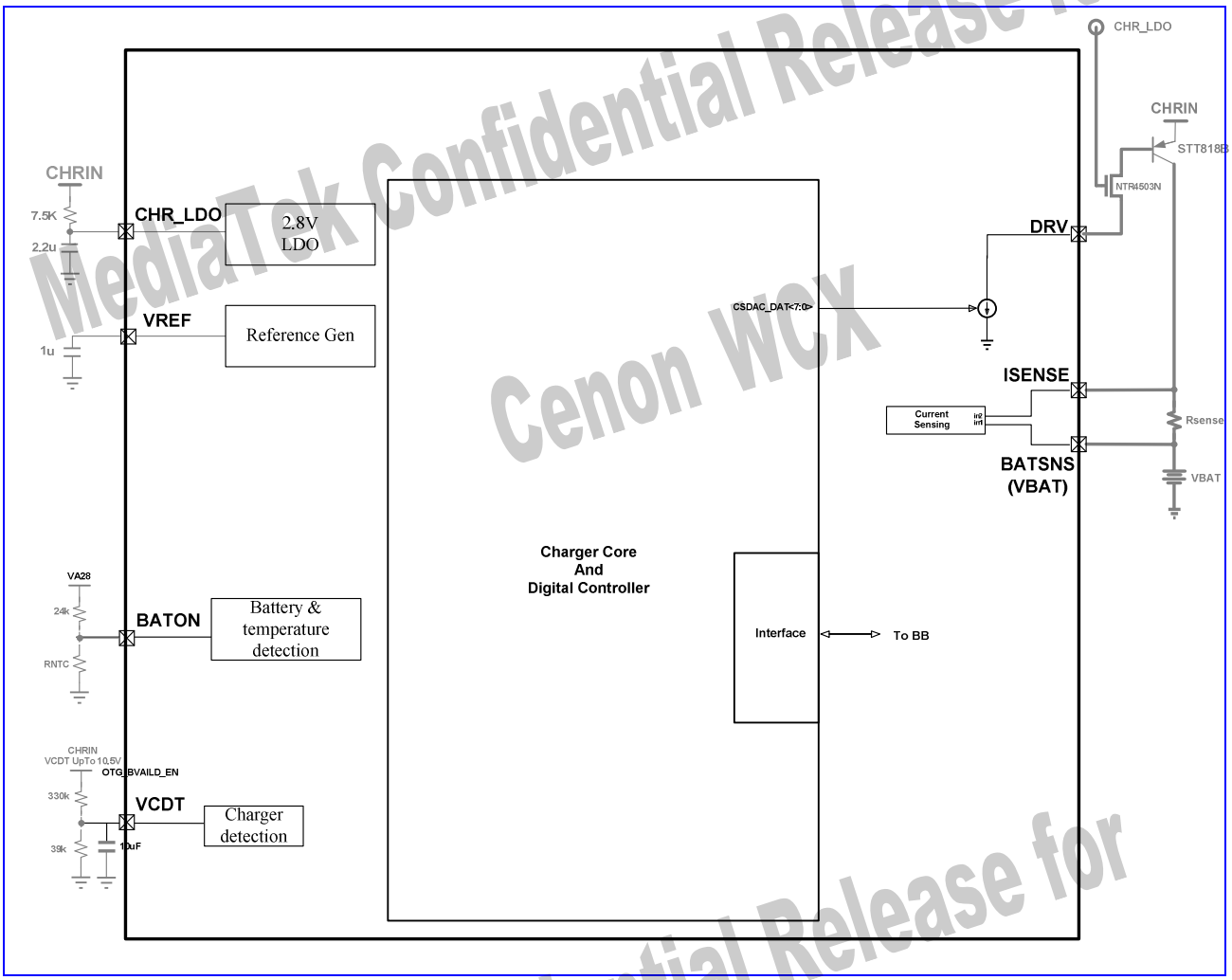

Figure 14 Battery charger block diagram

2.6.4.2 Functional Specification

The charger controller senses the charger input voltage (CHRIN) from either a standard AC-DC adaptor or an USB charger. When the charger input voltage is within a pre-determined range, the charging process is activated. This detector can resist higher input voltages than other parts of the PMU. Therefore, if an invalid charging source is detected (> 7.0 V), the charger detector stops the charging process immediately to avoid burning out the chip or even the phone.

MediaTek Confidential Release for Cenon WCX

This document contains information that is proprietary to MediaTek Inc.

Unauthorized reproduction or disclosure of this information in whole or in part is strictly prohibited.

Also if the charger-in level is not high enough (<4.3V), the charger will also be disabled to avoid improper charging behavior.

Symbol	Description	Condition	Min.	Typ.	Max.	Unit
	Charger detect-on range		4.3		7	V

Table 23 Charger Specifications

2.6.4.3 Charging Control

When the charger is active, the charger controller manages the charging phase according to the battery status. During the charging period, the battery voltage is constantly monitored. The battery charger in MT6252 supports pre-charge mode (VBAT<3.2V, PMU power-off state), CC mode (constant current mode or fast charging mode within the range of 3.2V<VBAT<4.2V) and Top-Off mode to optimize the charging procedure for the Li-ion battery.

2.6.4.4 Pre-charge Mode

When the battery voltage is in the UVLO state, the charger operates in the pre-charge mode. There are two steps in this mode. While the battery voltage is deeply discharged below 2.2V, PRECC0 trickle charging current applies to the battery.

The PRECC0 trickle charging current is about 56 mA when VBAT is under 2.2 V.

When the battery voltage exceeds 2.2 V, the so-called PRECC1 stage, the closed-loop pre-charge is enabled. The voltage drop across the external RSENSE is kept around 40 mV (AC Charger) or 14 mV (USB Host). The closed-loop pre-charge current can be calculated using the following formulas:

$$I_{PRECC1,AC\ adapter} = \frac{V_{SENSE}}{Rsense} = \frac{40mV}{Rsense}$$

$$I_{PRECC1,USB\ HOST} = \frac{V_{SENSE}}{Rsense} = \frac{14mV}{Rsense}$$

Symbol	Description	Condition	Min.	Typ.	Max.	Unit
	IUNIT with 500ms Pulse	**VBAT<2.2V**		**56**		**mA**
	Pre-charging current	VBAT<2.2V		56		mA
		VBAT>=2.2V(USB HOST)		$14/R_{sense}$		mA
		VBAT>=2.2V(AC Adapter)		$40/R_{sense}$		mA

© 2011 MediaTek Inc.

This document contains information that is proprietary to MediaTek Inc.

Unauthorized reproduction or disclosure of this information in whole or in part is strictly prohibited.

MediaTek Confidential Release for Cenon WCX

Symbol	Description	Condition	Min.	Typ.	Max.	Unit
	IUNIT with 500ms Pulse	**VBAT<2.2V**		**56**		**mA**
	Pre-charging off threshold	CHR_EN=L		3.3		V
	Pre-charging off hysteresis			0.4		V

Table 24 Pre-charge Specifications

2.6.4.5 Constant Current Mode

As the battery is charged up and over 3.2 V, it can switch to the CC mode (CHR_EN should be high). In CC mode, several charging currents can be set by programming registers or the external RSENSE resistor. The charging current can be determined by CS_VTH/RSENSE, where CS_VTH is programmed by registers. For example, if RSENSE is selected as 0.2 ohm, the CC mode charging current can be set between 70 mA and 800 mA. It can accommodate the battery charger to the various charger inputs with different current capabilities.

Symbol	Description	Condition	Min.	Typ.	Max.	Unit
	CC mode charging current (CS_VTH)	RG_CS_VTH [2:0]=000		$14/R_{sense}$		mA
		RG_CS_VTH [2:0]=001		$40/R_{sense}$		mA
		RG_CS_VTH [2:0]=010		$80/R_{sense}$		mA
		RG_CS_VTH [2:0]=011		$90/R_{sense}$		mA
		RG_CS_VTH [2:0]=100		$110/R_{sense}$		mA
		RG_CS_VTH [2:0]=101		$130/R_{sense}$		mA
		RG_CS_VTH [2:0]=110		$140/R_{sense}$		mA
		RG_CS_VTH [2:0]=111		$160/R_{sense}$		mA
	Current sensing resistor	RSENSE		0.2		ohm

Table 25 Constant Current Specifications

2.6.4.6 Top-Off Mode and Over-voltage Protection

While the battery voltage reaches about 4.2 V, a constant current with a much shorter period is used for charging. It allows more frequent full battery detections in the non-charging period. This is called full voltage charging mode or constant voltage charging mode in correspondence to a linear charger. While the battery voltage reaches 4.2 V, more

MediaTek Confidential Release for Cenon WCX

This document contains information that is proprietary to MediaTek Inc.

Unauthorized reproduction or disclosure of this information in whole or in part is strictly prohibited.

than the pre-setting times within the limited charging cycles, the end-of-charging process starts. It may prolong the charging and detecting period to get the optimized the full charging volume. This end-of-charging process is fully controlled by the baseband and can be easily optimized for different battery packs. Once the battery voltage exceeds 4.35 V, a hardware Over-voltage protection (OV) should be activated and the charger will be turned off immediately.

Symbol	Description	Condition	Min.	Typ.	Max.	Unit
	Charging complete threshold		4.15	4.2	4.25	V
	Battery Over voltage protection threshold (OV)			4.35		V

Table 26 Top-Off Specifications

MediaTek Confidential Release for Cenon WCX

This document contains information that is proprietary to MediaTek Inc.

Unauthorized reproduction or disclosure of this information in whole or in part is strictly prohibited.

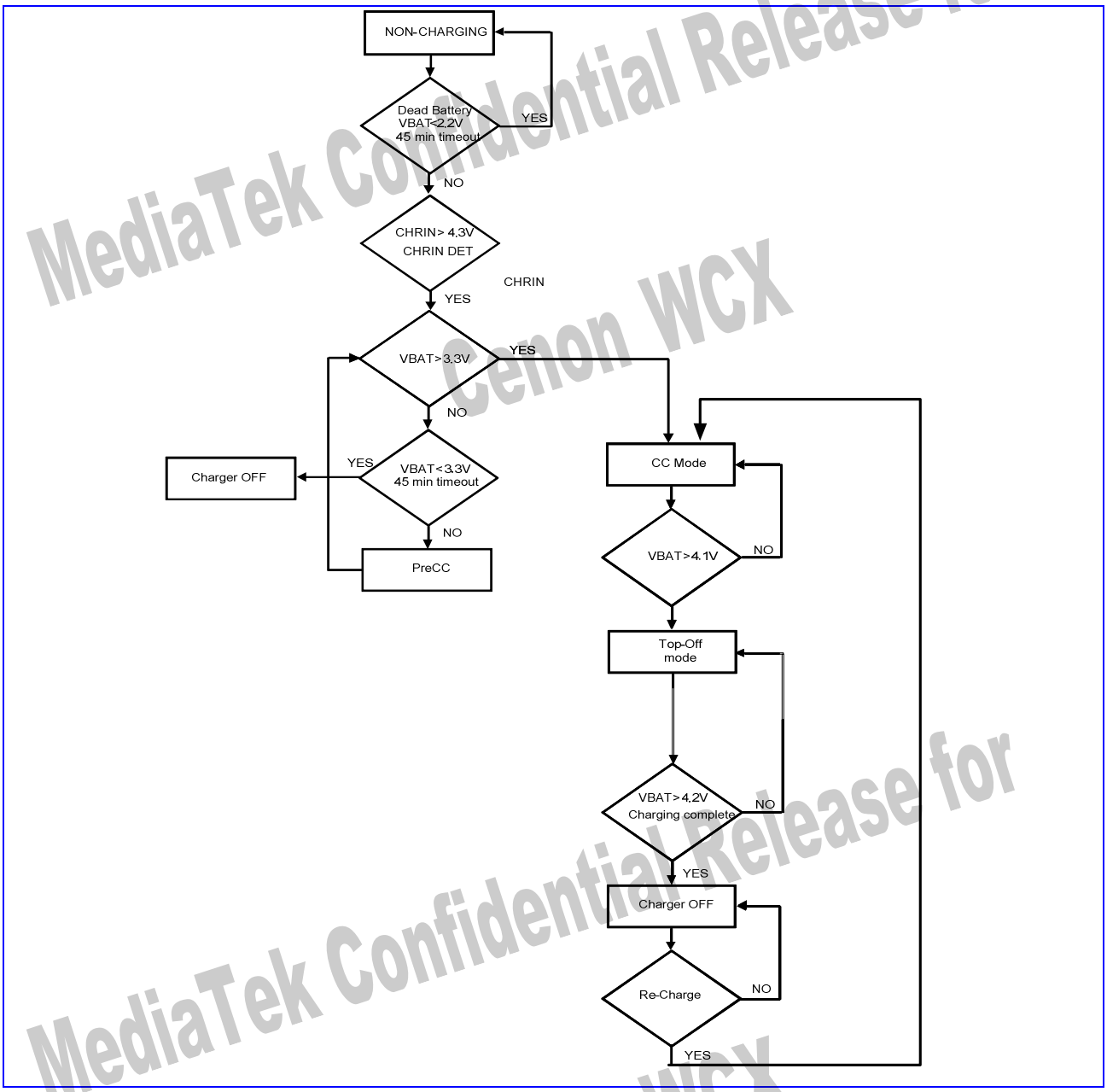

Figure 15 Charging States Diagram

MediaTek Confidential Release for Cenon WCX
MediaTek Confidential Release for Cenon WCX

This document contains information that is proprietary to MediaTek Inc.

Unauthorized reproduction or disclosure of this information in whole or in part is strictly prohibited.

CHR_EN is a register programmed by the register setting, which is controlled by BB or SW. In other words, BB and SW are the masters to manage the charging process at VBAT > 3.2 V. It can implement any charging profile; e.g. trickling charging, simply by programming CHR_EN.

Pin BATON turns off the charger immediately if it goes high (> 2.5±0.1 V). This function is designated to stop CC or Top-Off charging mode in case the battery is accidentally removed

2.6.4.7 Charging Profile

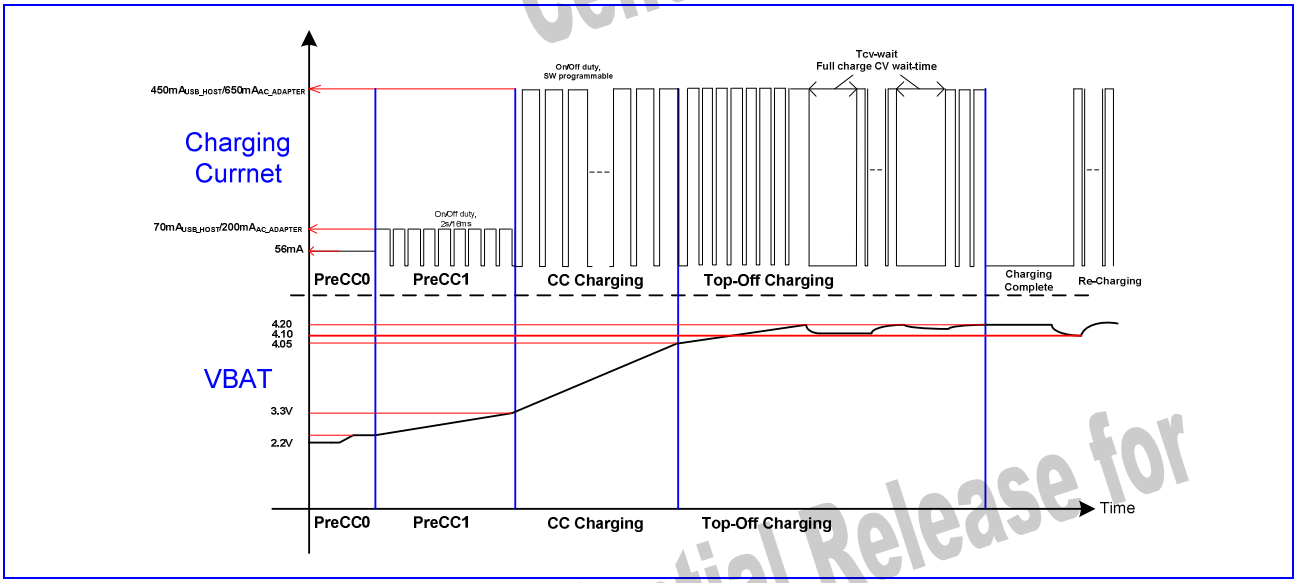

Figure 16 I-V curve of Li-Ion battery charging

2.6.5 Class-AB Audio Amplifier

2.6.5.1 Block Description

MT6252 has a built-in high fidelity class AB audio power amplifier. It is capable of delivering 1 watt of power to an 8 ohm BTL load with less than 10% distortion (THD+N) from a 4.2 V battery supply.

MediaTek Confidential Release for Cenon WCX

This document contains information that is proprietary to MediaTek Inc.

Unauthorized reproduction or disclosure of this information in whole or in part is strictly prohibited.

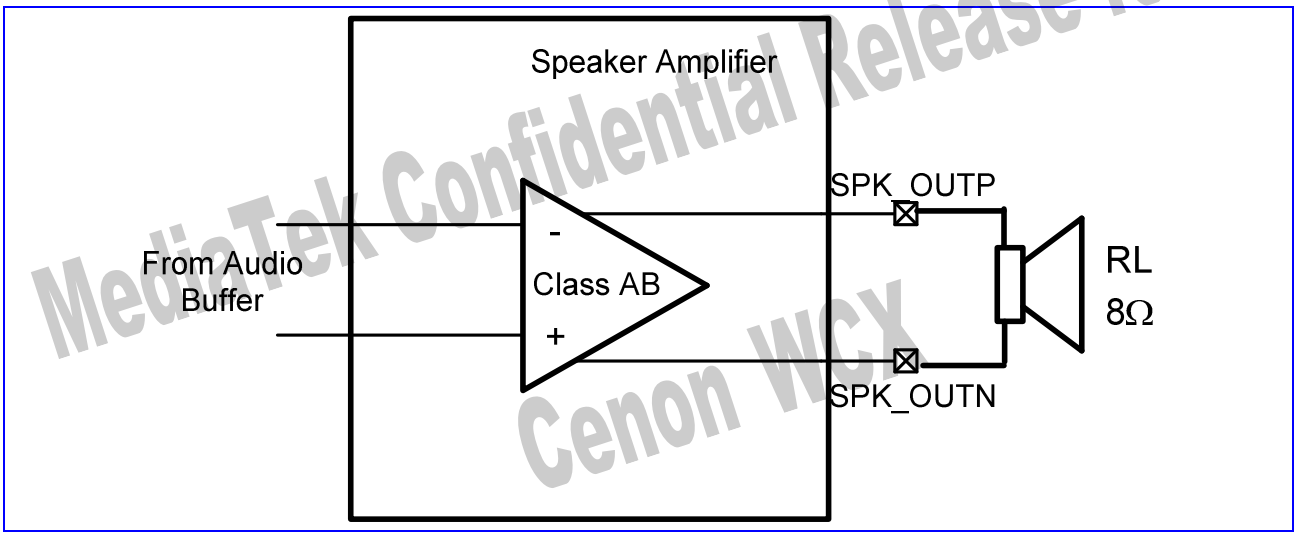

Figure 17 Class-D audio amplifier block diagram

2.6.5.2 Functional Specification

Symbol	Description	Condition	Min.	Typ.	Max.	Unit
	RMS Power	8Ω load, VBAT = 4.2 V		900		mW
		8Ω load, VBAT = 3.4 V		550		mW
	THD+N	1KHz, Po=0.8Wrms, 4.2V		0.01		%
	PSRR	20 Hz ~ 1 kHz, diff. mode		75		dB
	Shutdown current	SPKL_EN = SPKR_EN = 0		0.03		μA
	Quiescent power supply current	VBAT = 4.2 V, no input		3		mA
	Gain adjustment		0		18	dB
	Gain adjustment steps			3		dB

MediaTek Confidential Release for Cenon WCX

This document contains information that is proprietary to MediaTek Inc.

Unauthorized reproduction or disclosure of this information in whole or in part is strictly prohibited.

2.7 GSM/GPRS RF

2.7.1 Block Description

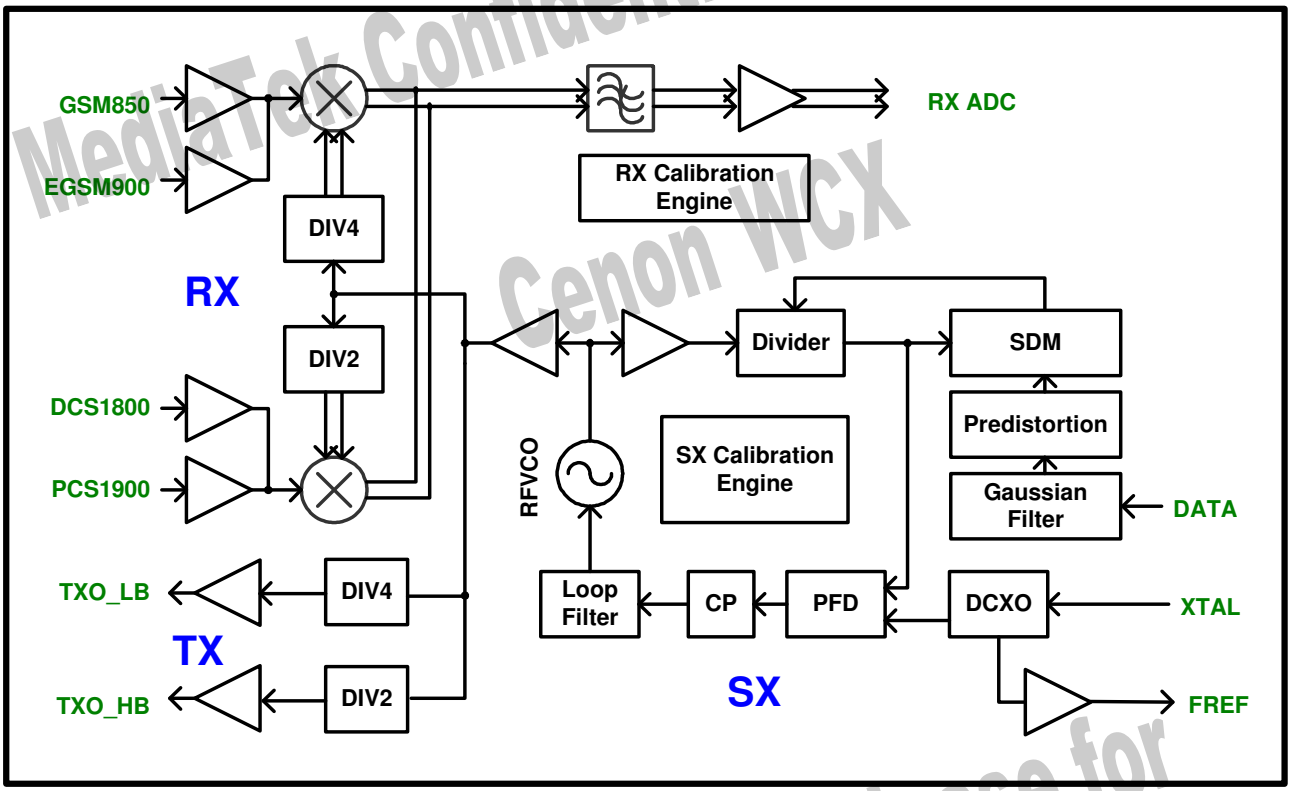

Figure 18 RFSYS Block Diagram

MT6252 RFSYS is a low current transceiver to support a true quad-band GSM/GPRS cellular system. The highly integrated RF system implements a high sensitivity and channel selection receiver, a high precision transmission modulator, a low phase noise frequency synthesizer, and a digitally controlled crystal oscillator. The external components required for the GPRS radio design are the Rx SAWs, PA, switchplexer, X'TAL, and a few passives.

2.7.1.1 Receiver

The receiver section integrates a low noise amplifier (LNA), down-converting mixers, and baseband amplifier/channel filters. The input of the receiver are from four LNAs to support quad-band applications. The LNAs are used to amplify

MediaTek Confidential Release for Cenon WCX

This document contains information that is proprietary to MediaTek Inc.

Unauthorized reproduction or disclosure of this information in whole or in part is strictly prohibited.

the received signal from the antenna, and then output to the mixer. While receiving large input signals, the LNAs can be switched to the low gain mode. The LO of quadrature mixers are generated from divide-by-4 and divide-by-2 of Fractional-N SX output. The sebsequent baseband amplifier is then used to amplify the down-converted signal. The gain of the baseband amplifier is programmable. DC offset correction is built in, and the DC correction is automatically triggered for each receiver slot. To provide the necessary adjacent channel and blocking filtering, the RX IF channel filter is built in.

2.7.1.2 Transmitter

The transmit section is a frequency modulator. The input DATA stream of transmitter is Gaussian filtered from baseband, and is fed to a pre-distortion filter. SX calibration engine are built in and are triggered by the Warm-up state before a TX slot. The pre-distorted DATA stream together with the channel word is then input to SD modulator for DIV-N control and frequency modulation of RFVCO.

The output of RFVCO is then divided by four for the applications of GSM850 and EGSM bands and by two for the applications of DCS and PCS bands. TX output buffers amplify the divided signals for PA input.

2.7.1.3 Synthesizer

The synthesizer section is a Phase-locked Loop (PLL) based fractional-N frequency synthesizer with a fully integrated set of RF VCO and loop filter. It provides the Local Oscillator (LO) signals for both the receiver and the transmitter. Other blocks in PLL are also included, such as the divider, Phase Frequency Detector (PFD), Charge Pump (CP), Sigma-delta Modulator (SDM), and X'TAL oscillator. The X'TAL oscillator is used to generate a 26 MHz clock as a reference signal for the synthesizer and the baseband. It is a digitally controlled X'TAL oscillator. A coarse capacitor array is built in for the factory 26 MHz clock frequency calibration, and a fine capacitor array is for the dynamic frequency control of the GSM system. The SX PLL takes the 26 MHz clock as a reference signal, and synthesize the desired LO frequency for both the receiver and transmitter. The synthesizer frequency programming is detailed as in Section 2.7.3.3.

2.7.2 Functional Specification

RFSYS MODE	AVDD28_RFD	AVDD28_TCXO	AVDD28_RF1 AVDD28_RF2	RFSYS Total	Unit
Deep Sleep (DCXO is off)	8.1	2.3	2.5	13	uA
Sleep (DCXO is on)	0.5	2.3	0.0025	2.8	mA
RX (GSM850/EGSM)	0.8	14	48	62	mA
RX (DCS/PCS)	0.8	14	51	65	mA
TX (GSM850/EGSM)	3.9	6.6	44	55	mA
TX (DCS/PCS)	3.9	6.6	39	50	mA

MediaTek Confidential Release for Cenon WCX

This document contains information that is proprietary to MediaTek Inc.

Unauthorized reproduction or disclosure of this information in whole or in part is strictly prohibited.

Table 27 DC Characteristic (TA=25°C, VDD=2.8V unless otherwise stated)

Symbol	Description	Band	Condition	Min.	Typ.	Max.	Unit
F_{RX}	Input frequency	GSM850		869		894	MHz
		GSM900		925		960	MHz
		DCS1800		1805		1880	MHz
		PCS1900		1930		1990	MHz
G_{max}	Differential max voltage gain	GSM850	LNA = high gain. PGA = 54 dB	92[1]	95		dB
		GSM900		92[2]	95		dB
		DCS1800		92[3]	95		dB
		PCS1900		92[4]	95		dB
$G_{step,LNA}$	Front-end LNA gain step	GSM850	LNA = high gain to low gain	23[1]	26	29[1]	dB
		GSM900		23[1]	26	29[1]	dB
		DCS1800		23[1]	26	29[1]	dB
		PCS1900		23[1]	26	29[1]	dB
NF_{25}	Noise figure at 25℃	GSM850	LNA = high gain. PGA = 54 dB		2.5	4.5[1]	dB
		GSM900			2.5	4.5[2]	dB
		DCS1800			2.5	4.5[3]	dB
		PCS1900			2.5	4.5[4]	dB
NF_{85}	Noise figure at 85℃	GSM850	LNA = high gain. PGA = 54 dB		3.5	4[5]	dB
		GSM900			3.5	4[5]	dB
		DCS1800			3.5	4[5]	dB
		PCS1900			3.5	4[5]	dB
IIP2	2nd-order input intercept point	GSM850	LNA = high gain. PGA = 54 dB	31[1]	43		dBm
		GSM900		31[2]	43		dBm
		DCS1800		31[3]	43		dBm
		PCS1900		31[4]	43		dBm
IIP3	3rd-order input intercept point	GSM850	LNA = high gain. PGA = 0 dB	-14[1]	-3		dBm
		GSM900		-14[2]	-3		dBm
		DCS1800		-14[3]	-3		dBm
		PCS1900		-14[4]	-3		dBm
$IIP3_{-20}$	3rd-order input intercept point @ -20 ℃	GSM850	LNA = high gain. PGA = 0 dB		-5		dBm
		GSM900			-5		dBm
		DCS1800			-5		dBm
		PCS1900			-5		dBm
IP_{1dB}	Input 1 dB compression point	GSM850	LNA = high gain. PGA = 0dB		-20		dBm
		GSM900			-20		dBm
		DCS1800			-20		dBm
		PCS1900			-20		dBm
SN_{3M}	Receiver S/N with 3 MHz blocker	GSM850	Blocker = –23 dBm. Noise power is calculated within 130 kHz bandwidth	11[1]	14		dB
		GSM900		11[2]	14		dB
		DCS1800	Blocker = –26 dBm. Noise power is calculated within 130 kHz bandwidth	11[3]	14		dB
		PCS1900		11[4]	14		dB
PGA_{linear}	PGA gain linearity	ALL	INL		0.2	1[5]	dB
			DNL		0.1	0.5[5]	dB
PGA_{step}	PGA gain step	ALL			2		dB
PGA_{step}	PGA dynamic range	ALL	PGA = 0 dB to 60 dB		60		dB

Table 28 RX AC Characteristic (TA=25°C, VDD=2.8V unless otherwise stated)

MediaTek Confidential Release for Canon WCX

This document contains information that is proprietary to MediaTek Inc.

Unauthorized reproduction or disclosure of this information in whole or in part is strictly prohibited.

Symbol	Description	Band	Condition	Min.	Typ.	Max.	Unit
F_{TX}	Frequency	GSM850		824		849	MHz
		GSM900		880		915	MHz
		DCS1800		1710		1785	MHz
		PCS1900		1850		1910	MHz
PE_{rms}	RMS phase error	GSM850 GSM900			1	2.5[1,2]	degrees
		DCS1800 PCS1900			1	2.5[3,4]	degrees
ORFS	Output modulation spectrum	GSM850 GSM900	400 kHz offset (RBW = 30 kHz bandwidth)		-70	-64[1,2]	dBc
		DCS1800 PCS1900			-67	-64[3,4]	dBc
		GSM850 GSM900	1.8 MHz offset (RBW = 30 kHz bandwidth)			-75[5]	dBc
		DCS1800 PCS1900				-75[5]	dBc
TX_{NOISE}	Tx noise in Rx band	GSM850	20 MHz Offset		-165	-164[5]	dBc/Hz
			35 MHz Offset		-168	-167[5]	dBc/Hz
		GSM900	20 MHz Offset		-165	-164[5]	dBc/Hz
			35 MHz Offset		-168	-167[5]	dBc/Hz
		DCS1800	20 MHz Offset		-160	-156[5]	dBc/Hz
		PCS1900	20 MHz Offset		-160	-156[5]	dBc/Hz
P_{out}	Output power level	GSM850 GSM900	PA driver amplifier. R_{load} = 50 Ω	1[1,2]	3	6[1,2]	dBm
		DCS1800 PCS1900		1[3,4]	3	6[3,4]	dBm
TX_{HARM}	Output 3rd harmonics	ALL	PA driver amplifier.		-10		dBc

Table 29 TX AC Characteristic (TA=25°C, VDD=2.8V unless otherwise stated)

Symbol	Description	Condition	Min.	Typ.	Max.	Unit
F_{range}	Frequency range		3296		3980	MHz
F_{ref}	Reference frequency			26		MHz
F_{res}	Frequency step resolution			3		Hz
PN_{10k}	Phase noise	@ 10 kHz offset		-83		dBc/Hz
PN_{400k}		@ 400 kHz offset		-116		dBc/Hz
PN_{3M}		@ 3 MHz offset		-136		dBc/Hz
T_{lock_rx}	Lock time of RX Burst	Frequency error<± 0.1ppm		150	200[5]	us
T_{lock_tx}	Lock time of TX Burst	Frequency error<± 0.1ppm		200	300[5]	us
$RFVCO_{PS}$	Pushing figure	Supply Pushing from VDD28_RF2		400		kHz/V

Table 30 DCXO AC Characteristic (TA=25°C, VDD=2.8V unless otherwise stated)

Symbol	Description	Condition	Min.	Typ.	Max.	Unit
F_{ref}	Operating frequency			26		MHz
C_L	Crystal C Load			7.5		pF
T_S	Crystal tuning sensitivity		27.5	32.3		ppm/pF
SR	Static range	CDAC from 0 to 100	± 22	± 30		ppm
DR	Dynamic range	CAFC from 0 to 8191	36	42		ppm
TC	Tempe Characteristic	T^A from -20°C to 65°C		+2		ppm
$F_{res\text{-}AFC}$	AFC tuning step			0.01		ppm/DA

MediaTek Confidential Release for Cenon WCX

This document contains information that is proprietary to MediaTek Inc.

Unauthorized reproduction or disclosure of this information in whole or in part is strictly prohibited.

Symbol	Description	Condition	Min.	Typ.	Max.	Unit
						C
T_{AFC}	AFC settling time	CAFC from 0 to 8191 CAFC from 8191 to 0 Frequency error < 0.1ppm		100	200[5]	us
T_{DCXO}	Start-up time	Frequency error < 1ppm Amplitude > 90 %			2[5]	ms
$DCXO_{PS}$	Pushing figure	Supply Pushing from VDD28_TCXO		0.5		ppm/V
V_{Fref}	Fref buffer output level	Loading = C3pF//R2Kohm	600[5]	800		mV_{p-p}
XO_{PN}	Fref buffer output phase noise CDAC=50 CAFC=6400	@ 1kHz offset		-135		dBc/Hz
		@ 10 kHz offset		-145		dBc/Hz
		@ 100 kHz offset		-155		dBc/Hz
		@ 1 MHz offset		-155		dBc/Hz

Table 31 DCXO AC Characteristic (TA=25°C, VDD=2.8V unless otherwise stated)

1. *Tested at channel 190 of GSM 850 band*
2. *Tested at channel 70 of E-GSM 900 band*
3. *Tested at channel 700 of DCS 1800 band*
4. *Tested at channel 660 of PCS 1900 band*
5. *Not subject to production test – verified by characterization and design*
6. *AVDD includes AVDD28_RF1, AVDD28_RF2, AVDD28_TCXO, and AVDD28_RFD*

2.7.3 Software Programming

The RFSYS transceiver operation commands are sent to control words via 3-wire serial interface, so that the transceiver works at the defined state and setting, which are described in Section 2.7.3.

2.7.3.1 Control Word Registers Description

Several control word registers are used for normal transceiver operation mode and SX frequency plan as listed below. These control word registers can be set automatically to default values after software or hardware Power-on-Reset.

Reg	Bit(s)	Name	Description
00h	19	SOR	**Software Register Rest** 0 = Disable (default) 1 = Enable Note(s) : 1. Used to restore the default values of registers.
01h	17:10	N_INT[7:0]	**Integer Part of N Counter** Note(s) : 1. Used to set output frequency of SX
01h 02h	9:0 12:0	N_FRAC[9:0] N_FRAC[22:10]	**Fractional Part of N Counter** Note(s) : 1. Used to set output frequency of SX

MediaTek Confidential Release for Cenon WCX

This document contains information that is proprietary to MediaTek Inc.

Unauthorized reproduction or disclosure of this information in whole or in part is strictly prohibited.

Reg	Bit(s)	Name	Description
02h	19:18	TRX[1:0]	**Mode Selection between TX and RX** 00 = RX (default) 01 = TX 1X = Reserved Note(s) : 1. Used as a flag before TX or RX mode.
02h	17:16	BAND[1:0]	**Band Selection** 00 = GSM 850 band 01 = EGSM 900 band (default) 10 = DCS 1800 band 11 = PCS 1900 band
02h	15:13	MODE[2:0]	**Mode Selection** 000 = Sleep mode (default) 010 = Standby mode 001 = Warmup mode 011 = RX mode 100 = TX mode
60h	5:0	RX_GC[5:0]	**RX PGA Gain Setting** 111111 = Maximum gain (default) Note(s) : 1. Sending CW96 is to enter RX mode, too.
39h	12:0	CAFC[12:0]	**DCXO Fine Frequency Adjustment for Digital AFC** 0000000000000 = Lowest frequency 1100100000000 = Midscale frequency (default) 1111111111111 = Highest frequency

Table 32 Description of Control Registers and Power-On-Reset Values of MT6252 RFSYS 3wire tablecontrol registers

2.7.3.2 Operation Control System Descriptions

There are seven operation states in the RFSYS, which are reset, deep sleep, sleep, stand-by, warm-up, receive and transmit state. The detailed descriptions are as follows.

Reset States (Power-on Reset)

To ensure the RFSYS in a known state after power-on, a power-on reset circuit is included. In this state, the supply voltage should be ready for RFSYS. Then, RFSYS will do power-on reset to ensure the known state. There are two reset methods for RFSYS: Power-on-Reset by the internal hardware power-on reset circuit. Software can be reset by setting the CW0:SOR = 1

The effect of the reset is to load default values to all the RFSYS control bits.

Deep Sleep State

In the Deep Sleep State, the RFSYS circuit blocks are inactive, including the 26 MHz DCXO.

Sleep State

MediaTek Confidential Release for Cenon WCX

This document contains information that is proprietary to MediaTek Inc.

Unauthorized reproduction or disclosure of this information in whole or in part is strictly prohibited.

In the Sleep State, the RFSYS circuit blocks are inactive, with the exception of DCXO. Programming [MODE] = [000] of CW2 will cause the RFSYS to enter the Sleep State. The Sleep State is the default state after either a power-on reset or a software reset.

Stand-by State

In the Standby State, Sx related blocks will be active. Programming [MODE] = [010] of CW2 will cause the RFSYS to enter the Standby State.

Warm-up State

In the Warm-up State, all circuit blocks except the Rx and Tx are active. Programming CW1 or programming [MODE]=[001] will cause the RFSYS to enter the Warm-up State. Entering the warm-up mode begins Sx calibrations before Tx and Rx slots.

Rx State

In the Rx State only the Tx circuit blocks are inactive. Programming [MODE] = [011] of CW2 or sending CW96 will cause the RFSYS to enter the Rx State..

Tx State

In the Tx State, only the Rx circuit blocks are inactive. Programming [MODE] = [100] of CW2 or sending CW133 will cause the RFSYS to enter the Tx State.

2.7.3.3 Synthesizer Frequency Programming

This section describes the synthesizer frequency planning in RX and TX modes.

The channel frequency ranges of Rx mode and TX mode are shown below:

RX-GSM850	869 MHz ~ 894 MHz
RX-EGSM900	925 MHz ~ 960 MHz
RX-DCS1800	1805 MHz ~ 1880 MHz
RX-PCS1900	1930 MHz ~ 1990 MHz
TX-GSM850	824 MHz ~ 849 MHz
TX-EGSM900	880 MHz ~ 915 MHz
TX-DCS1800	1710 MHz ~ 1785 MHz
TX-PCS1900	1850 MHz ~ 1910 MHz

The SX divider number N is decided by the following procedure in the RX/TX mode.

MediaTek Confidential Release for Cenon WCX

This document contains information that is proprietary to MediaTek Inc.

Unauthorized reproduction or disclosure of this information in whole or in part is strictly prohibited.

1. Calculate LO frequency f_{VCO} from RX/TX channel frequency f_{CH}
   $f_{VCO} = 4 * f_{CH}$ for GSM850 and EGSM900
   $f_{VCO} = 2 * f_{CH}$ for DCS1800 and PCS1900
2. Calculate N_{int} and N_{frac}.
   $N = f_{VCO}/26M = N_INT + N_FRAC/2^{23}$ $64 \le N_INT \le 255$, $0 \le N_FRAC < 2^{23}-1$
3. N_INT and N_FRAC are integers, which use the binary equivalents of N_INT and N_FRAC to program registers CW1:N_INT[7:0], CW1:N_FRAC[9:0] and CW2:N_FRAC[22:10].

2.7.3.4 RFSYS Power-on Sequence

2.7.3.4.1 BSI Programming of TX Burst

1. Initialization of RFSYS control registers
2. Stand-by (CW2/CW57, BSI)
   Set CW2 TRX[1:0]=01, MODE[2:0]=010, BAND[1:0] (00: GSM850, 01:EGSM900, 10:DCS, 11:PCS) and N_FRAC based on channel information

   Set CW57 XO_CAFC[12:0]
3. Warm-up (CW1, BSI)
   Set CW1 N_INT, N_FRAC based on channel information
4. TX-mode (CW133, BSI)
5. Sleep-mode (CW2, BSI)

2.7.3.4.2 BSI Programming of RX Burst

1. Initialization of RFSYS control registers
2. Stand-by (CW2/CW57, BSI)
   Set CW2 TRX[1:0]=00, MODE[2:0]=010, BAND[1:0] (00: GSM850, 01:EGSM900, 10:DCS, 11:PCS) and N_FRAC based on channel information

   Set CW57 XO_CAFC[12:0]
3. Warm-up (CW1, BSI)

MediaTek Confidential Release for Cenon WCX
MediaTek Confidential Release for Cenon WCX

This document contains information that is proprietary to MediaTek Inc.

Unauthorized reproduction or disclosure of this information in whole or in part is strictly prohibited.

Set CW1 N_INT, N_FRAC based on channel information

4. RX-mode (CW96, BSI)
   Set RX_GC[5:0] based on RX gain setting

6. Sleep-mode (CW2, BSI)

MediaTek Confidential Release for Cenon WCX

MediaTek Confidential Release for Cenon WCX

This document contains information that is proprietary to MediaTek Inc.

Unauthorized reproduction or disclosure of this information in whole or in part is strictly prohibited.

2.8 Package Information

2.8.1 Package Outline

MediaTek Confidential Release for Cenon WCX

MediaTek Confidential Release for Cenon WCX

This document contains information that is proprietary to MediaTek Inc.

Unauthorized reproduction or disclosure of this information in whole or in part is strictly prohibited.

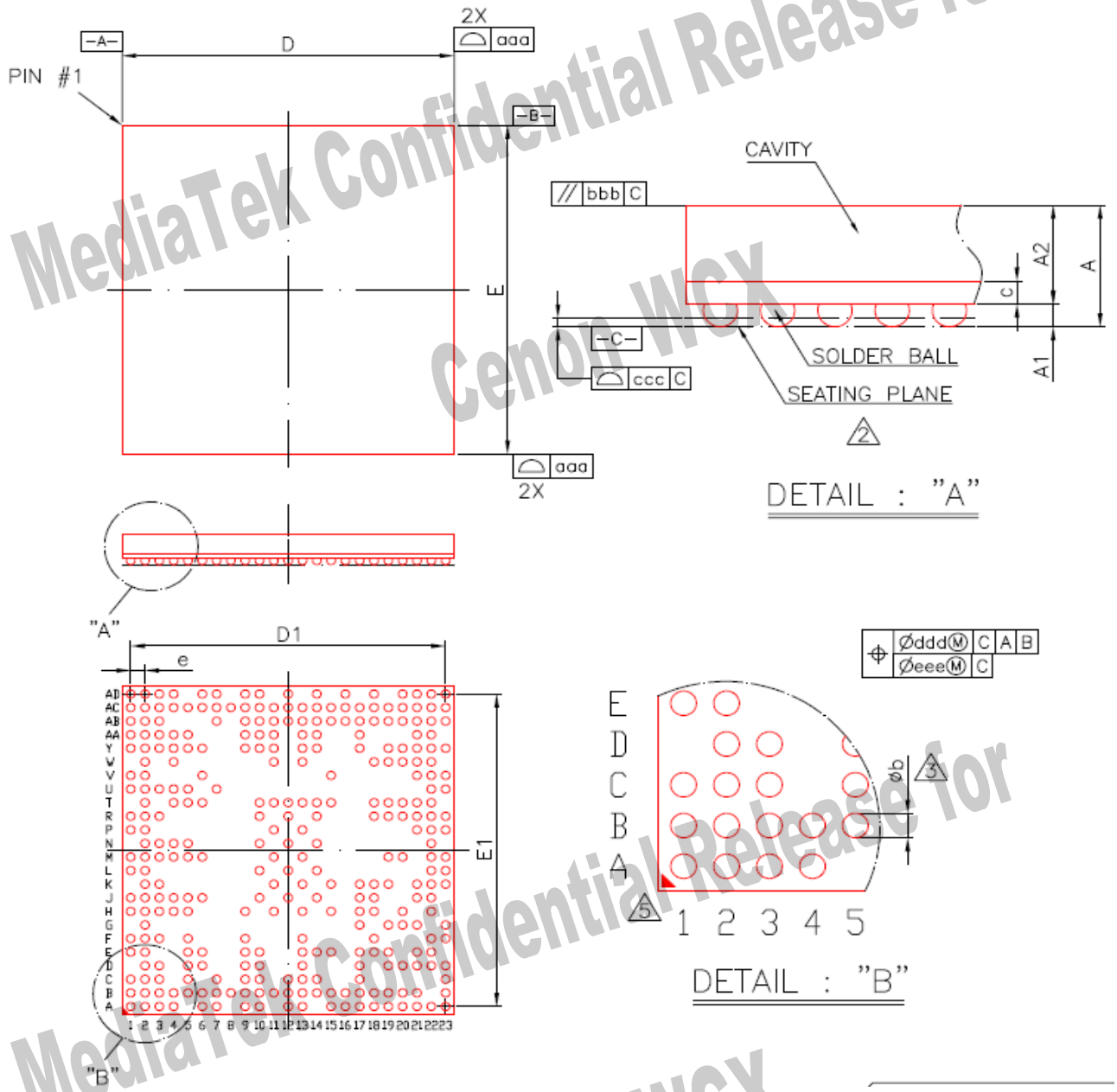

MediaTek Confidential Release for Cenon WCX

This document contains information that is proprietary to MediaTek Inc.

Unauthorized reproduction or disclosure of this information in whole or in part is strictly prohibited.

Symbol	Dimension in mm			Dimension in inch		
	MIN	NOM	MAX	MIN	NOM	MAX
A	---	---	1.20	---	---	0.047
A1	0.16	0.21	0.26	0.006	0.008	0.010
A2	0.86	0.91	0.96	0.034	0.036	0.038
c	0.17	0.21	0.25	0.007	0.008	0.010
D	11.50	11.60	11.70	0.453	0.457	0.461
E	12.00	12.10	12.20	0.472	0.476	0.480
D1	---	11.00	---	---	0.433	---
E1	---	11.50	---	---	0.453	---
e	---	0.50	---	---	0.020	---
b	0.25	0.30	0.35	0.010	0.012	0.014
aaa	0.10			0.004		
bbb	0.10			0.004		
ccc	0.08			0.003		
ddd	0.15			0.006		
eee	0.05			0.002		
MD/ME	23/24			23/24		

NOTE :

1. CONTROLLING DIMENSION : MILLIMETER.
2. PRIMARY DATUM C AND SEATING PLANE ARE DEFINED BY THE SPHERICAL CROWNS OF THE SOLDER BALLS.
3. DIMENSION b IS MEASURED AT THE MAXIMUM SOLDER BALL DIAMETER, PARALLEL TO PRIMARY DATUM C.
4. SPECIAL CHARACTERISTICS C CLASS: bbb, ccc
5. THE PATTERN OF PIN 1 FIDUCIAL IS FOR REFERENCE ONLY.

Figure 19 Outlines and Dimension of MT6252 TFBGA 11.6mm * 12.1mm 0.5mm pitch package

Body Size	Ball Count	Ball Pitch	Ball Dia.	Package Thk.

MediaTek Confidential Release for Cenon WCX

This document contains information that is proprietary to MediaTek Inc.

Unauthorized reproduction or disclosure of this information in whole or in part is strictly prohibited.

11.6	12.1	305	0.5	0.3	1.2

Table 33 MT6252 definition of TFBGA 11.6 x 12.1 mm 0.5 mm pitch package (unit: mm)

2.8.2 Thermal Operating Specifications

Symbol	Description	Value	Unit	Notes
Θ_{JA}	Thermal resistance from device junction to package case	27.67	‘C/W	

2.8.3 Lead-free Packaging

MT6252 is provided in a lead-free package which meets RoHS requirements.

2.9 Ordering Information

2.9.1 Top Marking Definition

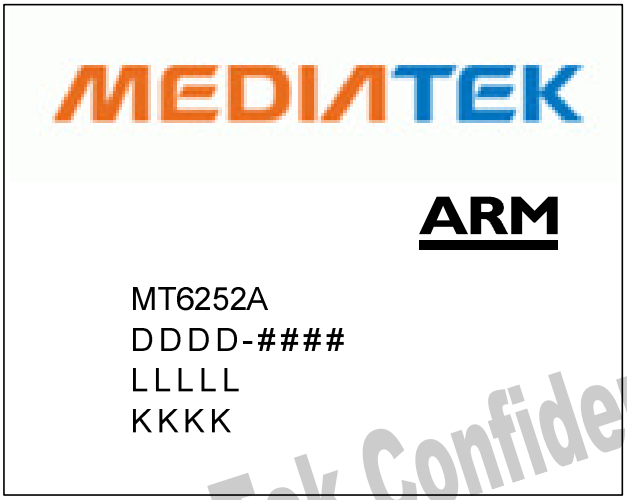

MT6252A: Part No.
DDDD: Date Code
####: Subcontractor Code
LLLLL: Die1 Lot No.
KKKK: Die2 Lot No.

Figure 20 Top marking of MT6252

MediaTek Confidential Release for Cenon WCX

This document contains information that is proprietary to MediaTek Inc.

Unauthorized reproduction or disclosure of this information in whole or in part is strictly prohibited.

3 Micro-Controller Unit Subsystem

Figure 21 illustrates the block diagram of the Micro-Controller Unit Subsystem in MT6252. The subsystem utilizes a main 32-bit ARM7EJ-S RISC processor, which plays the role of the main bus master controlling the whole subsystem. All processor transactions go to code cache first. The code cache controller accesses TCM (memory dedicated to ARM7EJS core), cache memory, or bus according to the processor's request address. If the requested content is found in TCM or in cache, no bus transaction is required. If the code cache hit rate is high enough, bus traffic can be effectively reduced and processor core performance maximized.

The bus comprises of two-level system buses: Advanced High-Performance Bus (AHB) and Advanced Peripheral Bus (APB). All bus transactions originate from bus masters, while slaves can only respond to requests from bus masters. Before data transfer can be established, the bus master must ask for bus ownership, accomplished by request-grant handshaking protocol between masters and arbiters.

Two levels of bus hierarchy are designed to provide optimum usage for different performance requirements. Specifically, AHB Bus, the main system bus, is tailored toward high-speed requirements and provides 32-bit data path with multiplex scheme for bus interconnections. The APB Bus, on the other hand, is designed to reduce interface complexity for lower data transfer rate, and so it is isolated from high bandwidth AHB Bus by APB Bridge. APB Bus supports 16-bit addressing and both 16-bit and 32-bit data paths. APB Bus is also optimized for minimal power consumption by turning off the clock when there is no APB bus activity.

During operation, if the target slave is located on AHB Bus, the transaction is conducted directly on AHB Bus. However, if the target slave is a peripheral and is attached to the APB bus, then the transaction is conducted between AHB and APB bus through the use of APB Bridge.

In order to off-load the processor core, a DMA Controller is designated to act as a master and share the bus resources on AHB Bus to do fast data movement between modules. This controller comprises thirteen DMA channels.

The Interrupt Controller provides a software interface to manipulate interrupt events. It can handle up to 32 interrupt sources asserted at the same time. In general, it generates 2 levels of interrupt requests, FIQ and IRQ, to the processor.

A SRAM is provided for acting as system memory for high-speed data access. For factory programming purpose, a Boot ROM module is used. These two modules use the same Internal Memory Controller to connect to AHB Bus.

MediaTek Confidential Release for Cenon WCX
MediaTek Confidential Release for Cenon WCX

This document contains information that is proprietary to MediaTek Inc.

Unauthorized reproduction or disclosure of this information in whole or in part is strictly prohibited.

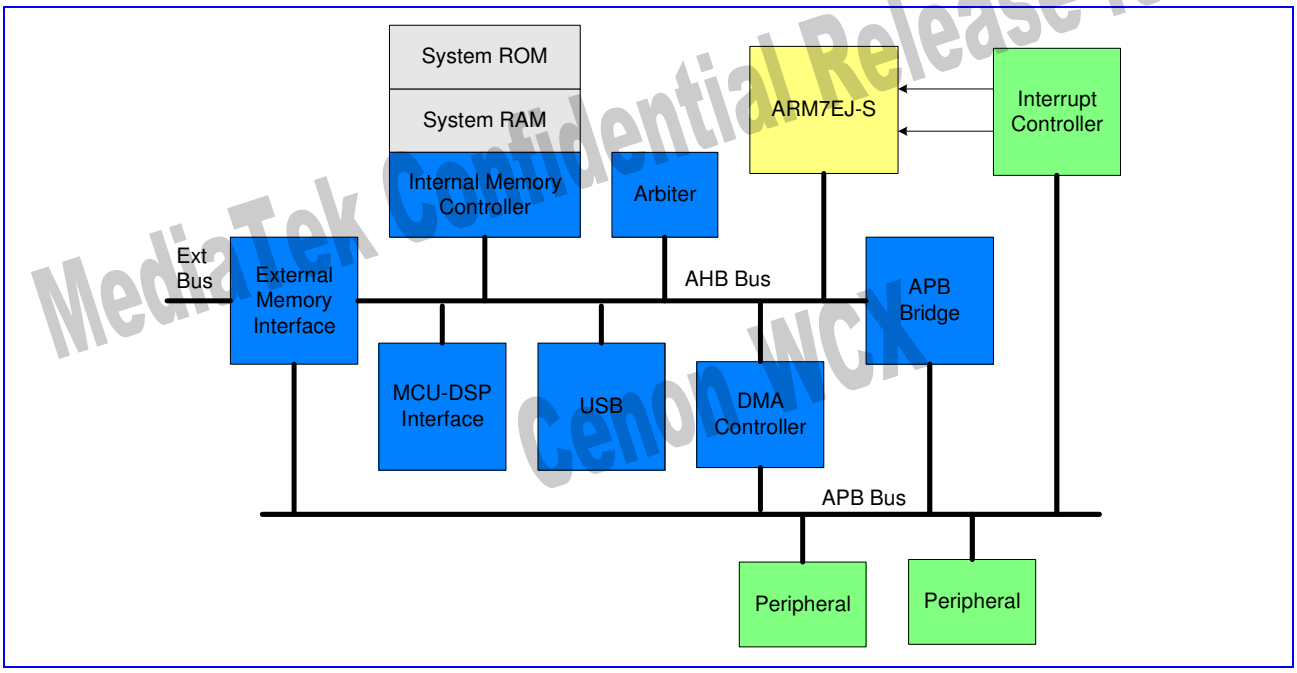

Figure 21 Block Diagram of the Micro-Controller Unit Subsystem in MT6252

MediaTek Confidential Release for Cenon WCX

This document contains information that is proprietary to MediaTek Inc.

Unauthorized reproduction or disclosure of this information in whole or in part is strictly prohibited.

3.1 Direct Memory Access

3.1.1 General Description

A generic DMA Controller is placed on Layer 2 AHB Bus to support fast data transfers and to off-load the processor. With this controller, specific devices on AHB or APB buses can benefit greatly from quick completion of data movement from or to memory modules such as Internal System RAM or External SRAM, excluding TCM. TCM is invisible for DMA engine. Such Generic DMA Controller can also be used to connect any two devices other than memory module as long as they can be addressed in memory space. **Figure 22** illustrates the system connections.

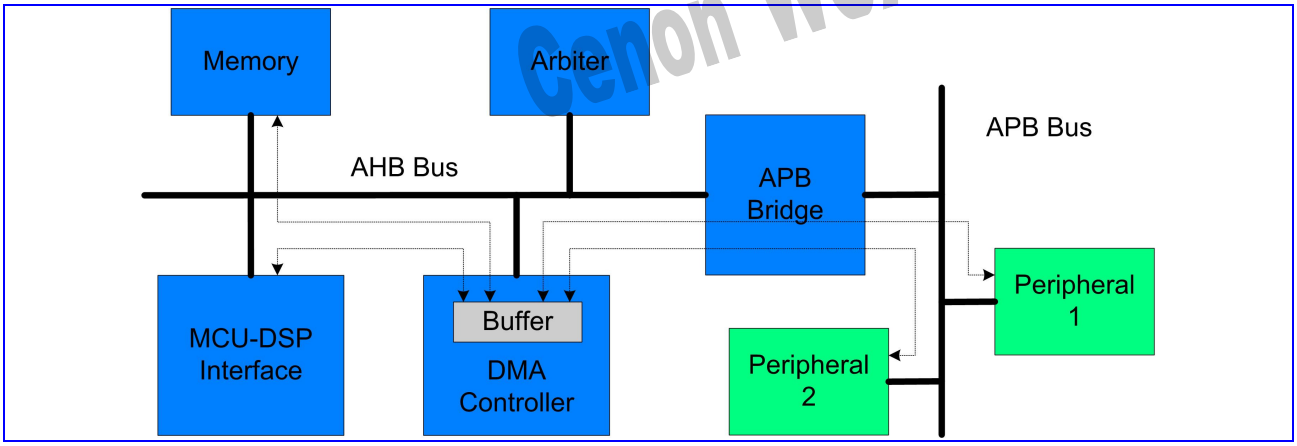

Figure 22 Variety Data Paths of DMA Transfers

Up to fourteen channels of simultaneous data transfers are supported. Each channel has a similar set of registers to be configured to different scheme as desired. If more than fourteen devices are requesting the DMA resources at the same time, software based arbitration should be employed. Once the service candidate is decided, the responsible device driver should configure the Generic DMA Controller properly in order to conduct DMA transfers. Both Interrupt and Polling based schemes in handling the completion event are supported. The block diagram of such generic DMA Controller is illustrated in **Figure 23**

MediaTek Confidential Release for Cenon WCX

This document contains information that is proprietary to MediaTek Inc.

Unauthorized reproduction or disclosure of this information in whole or in part is strictly prohibited.

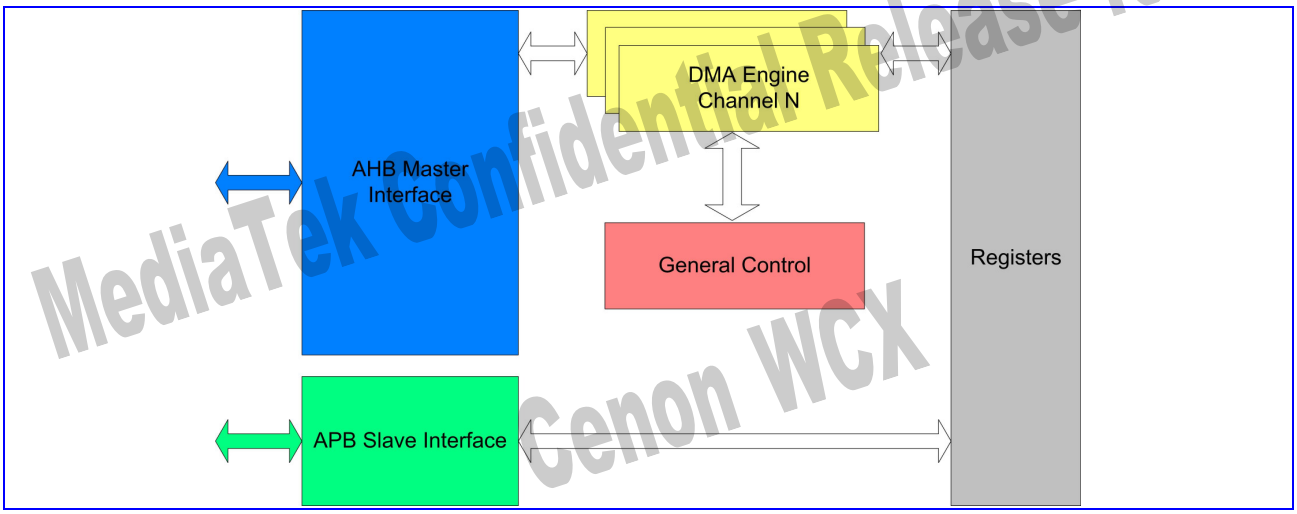

Figure 23 DMA Block Diagram

3.1.1.1 Full-Size & Half-Size DMA Channels

There are three types of DMA channels in the DMA controller. The first one is called a full-size DMA channel, the second one is called a half-size DMA channel, and the last is Virtual FIFO DMA. Channel 1 is full-size DMA channel; channels 2 through 9 are half-size ones; and channels 10 through 15 are Virtual FIFO DMA channels. The difference between the first two types of DMA channels is that both source and destination address are programmable in full-size DMA channels, but only the address of one side can be programmed in half-size DMA channel. In half-size channels, only either the source or destination address can be programmed, while the addresses of the other side are preset. Which preset address is used depends on the setting of MAS in DMA Channel Control Register. Refer to the Register Definition section for more detail.

3.1.1.2 Ring Buffer & Double Buffer Memory Data Movement

DMA channels 1 through 9 support ring-buffer and double-buffer memory data movement. This can be achieved by programming DMA_WPPT and DMA_WPTO, as well as setting WPEN in DMA_CON register to enable. **Figure 24** illustrates how this function works. Once the transfer counter reaches WPPT, the next address will jump to WPTO address after completing the WPPT data transfer. Note that only one side can be configured as ring-buffer or double-buffer memory, and this is controlled by WPSD in DMA_CON register.

MediaTek Confidential Release for Cenon WCX

This document contains information that is proprietary to MediaTek Inc.

Unauthorized reproduction or disclosure of this information in whole or in part is strictly prohibited.

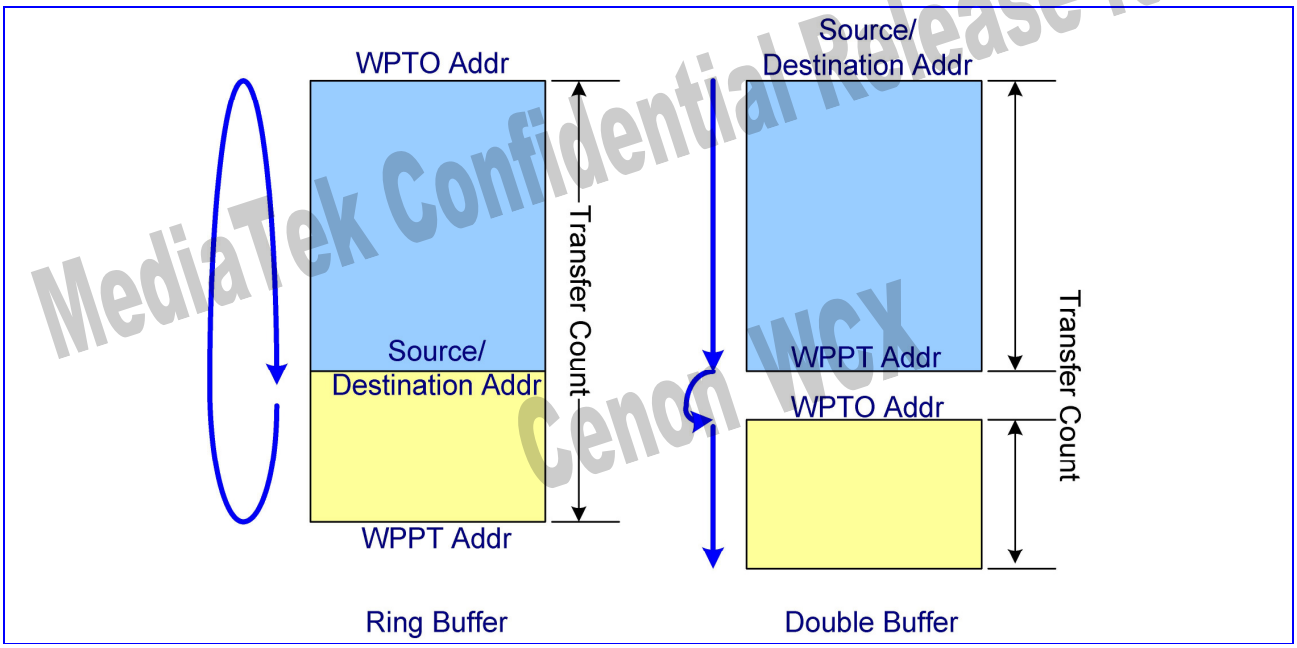

Figure 24 Ring Buffer and Double Buffer Memory Data Movement

3.1.1.3 Unaligned Word Access

The address of word access on AHB bus must be aligned to word boundary, or the 2 LSB is truncated to 00b. If programmers do not notice this, it may cause an incorrect data fetch. In the case where data is to be moved from unaligned addresses to aligned addresses, the word is usually first split into four bytes and then moved byte by byte. Thus four read and four write transfers will be appeared on the bus.

To improve bus efficiency, unaligned-word access is provided in DMA2~9. While this function is enabled, DMAs move data from unaligned address to aligned address by executing four continuous byte-read access and one word-write access, reducing the number of transfers on the bus by three.

MediaTek Confidential Release for Cenon WCX

This document contains information that is proprietary to MediaTek Inc.

Unauthorized reproduction or disclosure of this information in whole or in part is strictly prohibited.

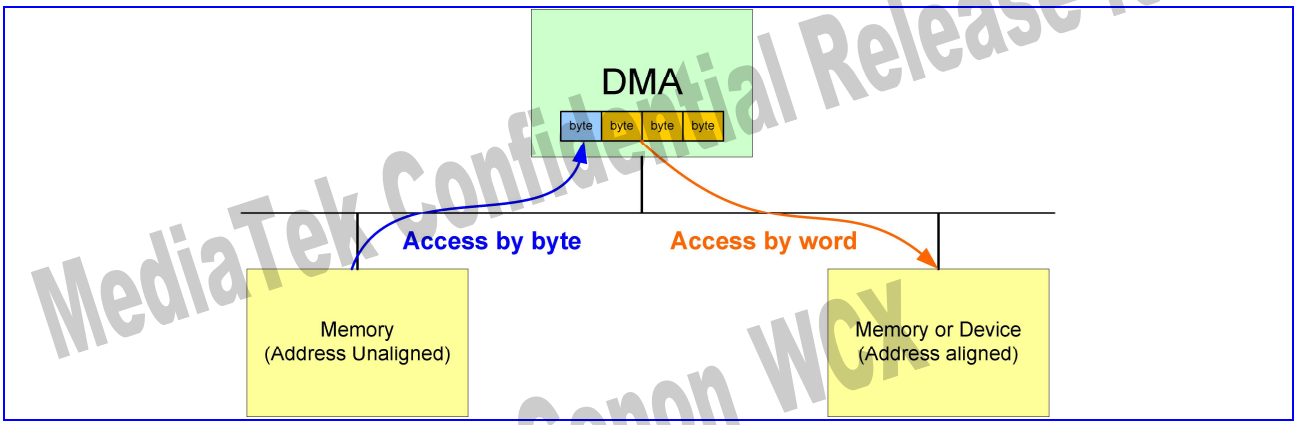

Figure 25 Unaligned Word Accesses

3.1.1.4 Virtual FIFO DMA

Virtual FIFO DMA is used to ease UART control. The difference between the Virtual FIFO DMAs and the ordinary DMAs is that Virtual FIFO DMA contains additional FIFO controller. The read and write pointers are kept in the Virtual FIFO DMA. During a read from the FIFO, the read pointer points to the address of the next data. During a write to the FIFO, the write pointer moves to the next address. If the FIFO is empty, a FIFO read is not allowed. Similarly, data is not written into the FIFO if the FIFO is full. Due to UART flow control requirements, an alert length is programmed. Once the FIFO Space is less than this value, an alert signal is issued to enable UART flow control. The type of flow control performed depends on the setting in UART.

Each Virtual FIFO DMA can be programmed as RX or TX FIFO. This depends on the setting of DIR in DMA_CON register. If DIR is “0” (READ), it means TX FIFO. On the other hand, if DIR is “1” (WRITE), the Virtual FIFO DMA is specified as a RX FIFO.

Virtual FIFO DMA provides an interrupt to MCU. This interrupt informs MCU that there is data in the FIFO, and the amount of data is over or under the value defined in DMA_COUNT register. With this, MCU does not need to poll DMA to know when data must be removed from or put into the FIFO.

Note that Virtual FIFO DMAs cannot be used as generic DMAs, i.e. DMA1~9.

MediaTek Confidential Release for Cenon WCX

This document contains information that is proprietary to MediaTek Inc.

Unauthorized reproduction or disclosure of this information in whole or in part is strictly prohibited.

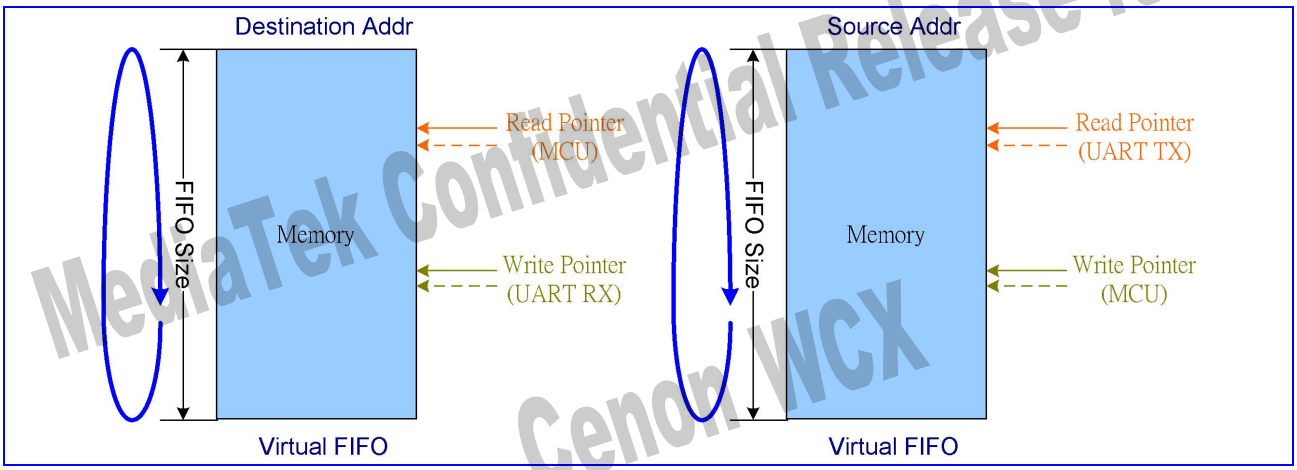

Figure 26 Virtual FIFO DMA

DMA number	Address of Virtual FIFO Access Port	Reference UART
DMA9	7800_0000h	UART1 RX
DMA10	7800_0100h	UART2 RX
DMA11	7800_0200h	UART 3 RX
DMA12	7800_0300h	UART1 TX
DMA13	7800_0400h	UART2 TX
DMA14	7800_0500h	UART3 TX

Table 34 Virtual FIFO Access Port

DMA number	Type	Ring Buffer	Double Buffer	Burst Mode	Unaligned Word Access
DMA1	Full Size	●	●	●	
DMA2	Half Size	●	●	●	●

MediaTek Confidential Release for Cenon WCX

This document contains information that is proprietary to MediaTek Inc.

Unauthorized reproduction or disclosure of this information in whole or in part is strictly prohibited.

DMA3	Half Size	●	●	●	●
DMA4	Half Size	●	●	●	●
DMA5	Half Size	●	●	●	●
DMA6	Half Size	●	●	●	●
DMA7	Half Size	●	●	●	●
DMA8	Half Size	●	●	●	●
DMA9	Half Size	●	●	●	●
DMA10	Virtual FIFO	●			
DMA11	Virtual FIFO	●			
DMA12	Virtual FIFO	●			
DMA13	Virtual FIFO	●			
DMA14	Virtual FIFO	●			
DMA15	Virtual FIFO	●			

Table 35 Function List of DMA channels

Register Address	Register Function	Acronym
0x8102_0000h	DMA Global Status Register	**DMA_GLBSTA**
0x8102_0028h	DMA Global Bandwidth Limiter Register	**DMA_GLBLIMITER**
0x8102_0100h	DMA Channel 1 Source Address Register	**DMA1_SRC**

MediaTek Confidential Release for Cenon WCX

This document contains information that is proprietary to MediaTek Inc.

Unauthorized reproduction or disclosure of this information in whole or in part is strictly prohibited.

0x8102_0104h	DMA Channel 1 Destination Address Register	**DMA1_DST**
0x8102_0108h	DMA Channel 1 Wrap Point Address Register	**DMA1_WPPT**
0x8102_010Ch	DMA Channel 1 Wrap To Address Register	**DMA1_WPTO**
0x8102_0110h	DMA Channel 1 Transfer Count Register	**DMA1_COUNT**
0x8102_0114h	DMA Channel 1 Control Register	**DMA1_CON**
0x8102_0118h	DMA Channel 1 Start Register	**DMA1_START**
0x8102_011Ch	DMA Channel 1 Interrupt Status Register	**DMA1_INTSTA**
0x8102_0120h	DMA Channel 1 Interrupt Acknowledge Register	**DMA1_ACKINT**
0x8102_0124h	DMA Channel 1 Remaining Length of Current Transfer	**DMA1_RLCT**
0x8102_0128h	DMA Channel 1 Bandwidth Limiter Register	**DMA1_LIMITER**
0x8102_0208h	DMA Channel 2 Wrap Point Address Register	**DMA2_WPPT**
0x8102_020Ch	DMA Channel 2 Wrap To Address Register	**DMA2_WPTO**
0x8102_0210h	DMA Channel 2 Transfer Count Register	**DMA2_COUNT**
0x8102_0214h	DMA Channel 2 Control Register	**DMA2_CON**
0x8102_0218h	DMA Channel 2 Start Register	**DMA2_START**
0x8102_021Ch	DMA Channel 2 Interrupt Status Register	**DMA2_INTSTA**
0x8102_0220h	DMA Channel 2 Interrupt Acknowledge Register	**DMA2_ACKINT**
0x8102_0224h	DMA Channel 2 Remaining Length of Current Transfer	**DMA2_RLCT**
0x8102_0228h	DMA Channel 2 Bandwidth Limiter Register	**DMA2_LIMITER**
0x8102_022Ch	DMA Channel 2 Programmable Address Register	**DMA2_PGMADDR**
0x8102_0308h	DMA Channel 3 Wrap Point Address Register	**DMA3_WPPT**
0x8102_030Ch	DMA Channel 3 Wrap To Address Register	**DMA3_WPTO**
0x8102_0310h	DMA Channel 3 Transfer Count Register	**DMA3_COUNT**
0x8102_0314h	DMA Channel 3 Control Register	**DMA3_CON**

MediaTek Confidential Release for Cenon WCX

This document contains information that is proprietary to MediaTek Inc.

Unauthorized reproduction or disclosure of this information in whole or in part is strictly prohibited.

0x8102_0318h	DMA Channel 3 Start Register	**DMA3_START**
0x8102_031Ch	DMA Channel 3 Interrupt Status Register	**DMA3_INTSTA**
0x8102_0320h	DMA Channel 3 Interrupt Acknowledge Register	**DMA3_ACKINT**
0x8102_0324h	DMA Channel 3 Remaining Length of Current Transfer	**DMA3_RLCT**
0x8102_0328h	DMA Channel 3 Bandwidth Limiter Register	**DMA3_LIMITER**
0x8102_032Ch	DMA Channel 3 Programmable Address Register	**DMA3_PGMADDR**
0x8102_0408h	DMA Channel 4 Wrap Point Address Register	**DMA4_WPPT**
0x8102_040Ch	DMA Channel 4 Wrap To Address Register	**DMA4_WPTO**
0x8102_0410h	DMA Channel 4 Transfer Count Register	**DMA4_COUNT**
0x8102_0414h	DMA Channel 4 Control Register	**DMA4_CON**
0x8102_0418h	DMA Channel 4 Start Register	**DMA4_START**
0x8102_041Ch	DMA Channel 4 Interrupt Status Register	**DMA4_INTSTA**
0x8102_0420h	DMA Channel 4 Interrupt Acknowledge Register	**DMA4_ACKINT**
0x8102_0424h	DMA Channel 4 Remaining Length of Current Transfer	**DMA4_RLCT**
0x8102_0428h	DMA Channel 4 Bandwidth Limiter Register	**DMA4_LIMITER**
0x8102_042Ch	DMA Channel 4 Programmable Address Register	**DMA4_PGMADDR**
0x8102_0508h	DMA Channel 5 Wrap Point Address Register	**DMA5_WPPT**
0x8102_050Ch	DMA Channel 5 Wrap To Address Register	**DMA5_WPTO**
0x8102_0510h	DMA Channel 5 Transfer Count Register	**DMA5_COUNT**
0x8102_0514h	DMA Channel 5 Control Register	**DMA5_CON**
0x8102_0518h	DMA Channel 5 Start Register	**DMA5_START**
0x8102_051Ch	DMA Channel 5 Interrupt Status Register	**DMA5_INTSTA**
0x8102_0520h	DMA Channel 5 Interrupt Acknowledge Register	**DMA5_ACKINT**
0x8102_0524h	DMA Channel 5 Remaining Length of Current Transfer	**DMA5_RLCT**

MediaTek Confidential Release for Cenon WCX
MediaTek Confidential Release for Cenon WCX

This document contains information that is proprietary to MediaTek Inc.

Unauthorized reproduction or disclosure of this information in whole or in part is strictly prohibited.

0x8102_0528h	DMA Channel 5 Bandwidth Limiter Register	**DMA5_LIMITER**
0x8102_052Ch	DMA Channel 5 Programmable Address Register	**DMA5_PGMADDR**
0x8102_0608h	DMA Channel 6 Wrap Point Address Register	**DMA6_WPPT**
0x8102_060Ch	DMA Channel 6 Wrap To Address Register	**DMA6_WPTO**
0x8102_0610h	DMA Channel 6 Transfer Count Register	**DMA6_COUNT**
0x8102_0614h	DMA Channel 6 Control Register	**DMA6_CON**
0x8102_0618h	DMA Channel 6 Start Register	**DMA6_START**
0x8102_061Ch	DMA Channel 6 Interrupt Status Register	**DMA6_INTSTA**
0x8102_0620h	DMA Channel 6 Interrupt Acknowledge Register	**DMA6_ACKINT**
0x8102_0624h	DMA Channel 6 Remaining Length of Current Transfer	**DMA6_RLCT**
0x8102_0628h	DMA Channel 6 Bandwidth Limiter Register	**DMA6_LIMITER**
0x8102_062Ch	DMA Channel 6 Programmable Address Register	**DMA6_PGMADDR**
0x8102_0708h	DMA Channel 7 Wrap Point Address Register	**DMA7_WPPT**
0x8102_070Ch	DMA Channel 7 Wrap To Address Register	**DMA7_WPTO**
0x8102_0710h	DMA Channel 7 Transfer Count Register	**DMA7_COUNT**
0x8102_0714h	DMA Channel 7 Control Register	**DMA7_CON**
0x8102_0718h	DMA Channel 7 Start Register	**DMA7_START**
0x8102_071Ch	DMA Channel 7 Interrupt Status Register	**DMA7_INTSTA**
0x8102_0720h	DMA Channel 7 Interrupt Acknowledge Register	**DMA7_ACKINT**
0x8102_0724h	DMA Channel 7 Remaining Length of Current Transfer	**DMA7_RLCT**
0x8102_0728h	DMA Channel 7 Bandwidth Limiter Register	**DMA7_LIMITER**
0x8102_072Ch	DMA Channel 7 Programmable Address Register	**DMA7_PGMADDR**
0x8102_0808h	DMA Channel 8 Wrap Point Address Register	**DMA8_WPPT**
0x8102_080Ch	DMA Channel 8 Wrap To Address Register	**DMA8_WPTO**

MediaTek Confidential Release for Cenon WCX
MediaTek Confidential Release for Cenon WCX

This document contains information that is proprietary to MediaTek Inc.

Unauthorized reproduction or disclosure of this information in whole or in part is strictly prohibited.

0x8102_0810h	DMA Channel 8 Transfer Count Register	**DMA8_COUNT**
0x8102_0814h	DMA Channel 8 Control Register	**DMA8_CON**
0x8102_0818h	DMA Channel 8 Start Register	**DMA8_START**
0x8102_081Ch	DMA Channel 8 Interrupt Status Register	**DMA8_INTSTA**
0x8102_0820h	DMA Channel 8 Interrupt Acknowledge Register	**DMA8_ACKINT**
0x8102_0824h	DMA Channel 8 Remaining Length of Current Transfer	**DMA8_RLCT**
0x8102_0828h	DMA Channel 8 Bandwidth Limiter Register	**DMA8_LIMITER**
0x8102_082Ch	DMA Channel 8 Programmable Address Register	**DMA8_PGMADDR**
0x8102_0908h	DMA Channel 9 Wrap Point Address Register	**DMA9_WPPT**
0x8102_090Ch	DMA Channel 9 Wrap To Address Register	**DMA9_WPTO**
0x8102_0910h	DMA Channel 9 Transfer Count Register	**DMA9_COUNT**
0x8102_0914h	DMA Channel 9 Control Register	**DMA9_CON**
0x8102_0918h	DMA Channel 9 Start Register	**DMA9_START**
0x8102_091Ch	DMA Channel 9 Interrupt Status Register	**DMA9_INTSTA**
0x8102_0920h	DMA Channel 9 Interrupt Acknowledge Register	**DMA9_ACKINT**
0x8102_0924h	DMA Channel 9 Remaining Length of Current Transfer	**DMA9_RLCT**
0x8102_0928h	DMA Channel 9 Bandwidth Limiter Register	**DMA9_LIMITER**
0x8102_092Ch	DMA Channel 9 Programmable Address Register	**DMA9_PGMADDR**
0x8102_0C10h	DMA Channel 10 Transfer Count Register	**DMA10_COUNT**
0x8102_0A14h	DMA Channel 10 Control Register	**DNA10_CON**
0x8102_0A18h	DMA Channel 10 Start Register	**DNA10_START**
0x8102_0A1Ch	DMA Channel 10 Interrupt Status Register	**DNA10_INTSTA**
0x8102_0A20h	DMA Channel 10 Interrupt Acknowledge Register	**DNA10_ACKINT**
0x8102_0A28h	DMA Channel 10 Bandwidth Limiter Register	**DNA10_LIMITER**

MediaTek Confidential Release for Cenon WCX

This document contains information that is proprietary to MediaTek Inc.

Unauthorized reproduction or disclosure of this information in whole or in part is strictly prohibited.

0x8102_0A2Ch	DMA Channel 10 Programmable Address Register	**DNA10_PGMADDR**
0x8102_0A30h	DMA Channel 10 Write Pointer	**DNA10_WRPTR**
0x8102_0A34h	DMA Channel 10 Read Pointer	**DNA10_RDPTR**
0x8102_0A38h	DMA Channel 10 FIFO Count	**DNA10_FFCNT**
0x8102_0A3Ch	DMA Channel 10 FIFO Status	**DNA10_FFSTA**
0x8102_0A40h	DMA Channel 10 Alert Length	**DNA10_ALTLEN**
0x8102_0A44h	DMA Channel 10 FIFO Size	**DNA10_FFSIZE**
0x8102_0B10h	DMA Channel 11 Transfer Count Register	**DMA11_COUNT**
0x8102_0B14h	DMA Channel 11 Control Register	**DMA11_CON**
0x8102_0B18h	DMA Channel 11 Start Register	**DMA11_START**
0x8102_0B1Ch	DMA Channel 11 Interrupt Status Register	**DMA11_INTSTA**
0x8102_0B20h	DMA Channel 11 Interrupt Acknowledge Register	**DMA11_ACKINT**
0x8102_0B28h	DMA Channel 11 Bandwidth Limiter Register	**DMA11_LIMITER**
0x8102_0B2Ch	DMA Channel 11 Programmable Address Register	**DMA11_PGMADDR**
0x8102_0B30h	DMA Channel 11 Write Pointer	**DMA11_WRPTR**
0x8102_0B34h	DMA Channel 11 Read Pointer	**DMA11_RDPTR**
0x8102_0B38h	DMA Channel 11 FIFO Count	**DMA11_FFCNT**
0x8102_0B3Ch	DMA Channel 11 FIFO Status	**DMA11_FFSTA**
0x8102_0B40h	DMA Channel 11 Alert Length	**DMA11_ALTLEN**
0x8102_0B44h	DMA Channel 11 FIFO Size	**DMA11_FFSIZE**
0x8102_0C10h	DMA Channel 12 Transfer Count Register	**DMA12_COUNT**
0x8102_0C14h	DMA Channel 12 Control Register	**DMA12_CON**
0x8102_0C18h	DMA Channel 12 Start Register	**DMA12_START**
0x8102_0C1Ch	DMA Channel 12 Interrupt Status Register	**DMA12_INTSTA**

MediaTek Confidential Release for Cenon WCX
MediaTek Confidential Release for Cenon WCX

This document contains information that is proprietary to MediaTek Inc.

Unauthorized reproduction or disclosure of this information in whole or in part is strictly prohibited.

0x8102_0C20h	DMA Channel 12 Interrupt Acknowledge Register	**DMA12_ACKINT**
0x8102_0C28h	DMA Channel 12 Bandwidth Limiter Register	**DMA12_LIMITER**
0x8102_0C2Ch	DMA Channel 12 Programmable Address Register	**DMA12_PGMADDR**
0x8102_0C30h	DMA Channel 12 Write Pointer	**DMA12_WRPTR**
0x8102_0C34h	DMA Channel 12 Read Pointer	**DMA12_RDPTR**
0x8102_0C38h	DMA Channel 12 FIFO Count	**DMA12_FFCNT**
0x8102_0C3Ch	DMA Channel 12 FIFO Status	**DMA12_FFSTA**
0x8102_0C40h	DMA Channel 12 Alert Length	**DMA12_ALTLEN**
0x8102_0C44h	DMA Channel 12 FIFO Size	**DMA12_FFSIZE**
0x8102_0D10h	DMA Channel 13 Transfer Count Register	**DMA13_COUNT**
0x8102_0D14h	DMA Channel 13 Control Register	**DMA13_CON**
0x8102_0D18h	DMA Channel 13 Start Register	**DMA13_START**
0x8102_0D1Ch	DMA Channel 13 Interrupt Status Register	**DMA13_INTSTA**
0x8102_0D20h	DMA Channel 13 Interrupt Acknowledge Register	**DMA13_ACKINT**
0x8102_0D28h	DMA Channel 13 Bandwidth Limiter Register	**DMA13_LIMITER**
0x8102_0D2Ch	DMA Channel 13 Programmable Address Register	**DMA13_PGMADDR**
0x8102_0D30h	DMA Channel 13 Write Pointer	**DMA13_WRPTR**
0x8102_0D34h	DMA Channel 13 Read Pointer	**DMA13_RDPTR**
0x8102_0D38h	DMA Channel 13 FIFO Count	**DMA13_FFCNT**
0x8102_0D3Ch	DMA Channel 13 FIFO Status	**DMA13_FFSTA**
0x8102_0D40h	DMA Channel 13 Alert Length	**DMA13_ALTLEN**
0x8102_0D44h	DMA Channel 13 FIFO Size	**DMA13_FFSIZE**
0x8102_0E10h	DMA Channel 14 Transfer Count Register	**DMA14_COUNT**
0x8102_0E14h	DMA Channel 14 Control Register	**DMA14_CON**

MediaTek Confidential Release for Cenon WCX

This document contains information that is proprietary to MediaTek Inc.

Unauthorized reproduction or disclosure of this information in whole or in part is strictly prohibited.

0x8102_0E18h	DMA Channel 14 Start Register	**DMA14_START**
0x8102_0E1Ch	DMA Channel 14 Interrupt Status Register	**DMA14_INTSTA**
0x8102_0E20h	DMA Channel 14 Interrupt Acknowledge Register	**DMA14_ACKINT**
0x8102_0E28h	DMA Channel 14 Bandwidth Limiter Register	**DMA14_LIMITER**
0x8102_0E2Ch	DMA Channel 14 Programmable Address Register	**DMA14_PGMADDR**
0x8102_0E30h	DMA Channel 14 Write Pointer	**DMA14_WRPTR**
0x8102_0E34h	DMA Channel 14 Read Pointer	**DMA14_RDPTR**
0x8102_0E38h	DMA Channel 14 FIFO Count	**DMA14_FFCNT**
0x8102_0E3Ch	DMA Channel 14 FIFO Status	**DMA14_FFSTA**
0x8102_0E40h	DMA Channel 14 Alert Length	**DMA14_ALTLEN**
0x8102_0E44h	DMA Channel 14 FIFO Size	**DMA14_FFSIZE**
0x8102_0F10h	DMA Channel 15 Transfer Count Register	**DMA15_COUNT**
0x8102_0F14h	DMA Channel 15 Control Register	**DMA15_CON**
0x8102_0F18h	DMA Channel 15 Start Register	**DMA15_START**
0x8102_0F1Ch	DMA Channel 15 Interrupt Status Register	**DMA15_INTSTA**
0x8102_0F20h	DMA Channel 15 Interrupt Acknowledge Register	**DMA15_ACKINT**
0x8102_0F28h	DMA Channel 15 Bandwidth Limiter Register	**DMA15_LIMITER**
0x8102_0F2Ch	DMA Channel 15 Programmable Address Register	**DMA15_PGMADDR**
0x8102_0F30h	DMA Channel 15 Write Pointer	**DMA15_WRPTR**
0x8102_0F34h	DMA Channel 15 Read Pointer	**DMA15_RDPTR**
0x8102_0F38h	DMA Channel 15 FIFO Count	**DMA15_FFCNT**
0x8102_0F3Ch	DMA Channel 15 FIFO Status	**DMA15_FFSTA**
0x8102_0F40h	DMA Channel 15 Alert Length	**DMA15_ALTLEN**
0x8102_0F44h	DMA Channel 15 FIFO Size	**DMA15_FFSIZE**

MediaTek Confidential Release for Cenon WCX

This document contains information that is proprietary to MediaTek Inc.

Unauthorized reproduction or disclosure of this information in whole or in part is strictly prohibited.

Table 36 DMA Registers

MediaTek Confidential Release for Cenon WCX

MediaTek Confidential Release for Cenon WCX

This document contains information that is proprietary to MediaTek Inc.

Unauthorized reproduction or disclosure of this information in whole or in part is strictly prohibited.

3.1.2 Register Definitions

Register programming tips:

- Start registers shall be cleared, when associated channels are being programmed.
- PGMADDR, i.e. programmable address, only exists in half-size DMA channels. If DIR in Control Register is high, PGMADDR represents Destination Address. Conversely, If DIR in Control Register is low, PGMADDR represents Source Address.
- Functions of ring-buffer and double-buffer memory data movement can be activated on either source side or destination side by programming DMA_WPPT & and DMA_WPTO, as well as setting WPEN in DMA_CON register high. WPSD in DMA_CON register determines the activated side.

DMA+0000h DMA Global Status Register DMA_GLBSTA

Bit	31	30	29	28	27	26	25	24	23	22	21	20	19	18	17	16
Name					IT14	RUN14	IT13	RUN13	IT12	RUN12	IT11	RUN11	IT10	RUN10	IT9	RUN9
Type					RO	RO	RO	RO	RO	RO	RO	RO	RO	RO	RO	RO
Reset					0	0	0	0	0	0	0	0	0	0	0	0
Bit	15	14	13	12	11	10	9	8	7	6	5	4	3	2	1	0
Name	IT8	RUN8	IT7	RUN7	IT6	RUN6	IT5	RUN5	IT4	RUN4	IT3	RUN3	IT2	RUN2	IT1	RUN1
Type	RO	RO	RO	RO	RO	RO	RO	RO	RO	RO	RO	RO	RO	RO	RO	RO
Reset	0	0	0	0	0	0	0	0	0	0	0	0	0	0	0	0

This register helps software program keep track of the global status of DMA channels.

RUN_N DMA channel n status

- **0** Channel n is stopped or has completed the transfer already.
- **1** Channel n is currently running.

IT_N Interrupt status for channel n

- **0** No interrupt is generated.
- **1** An interrupt is pending and waiting for service.

DMA+0028h DMA Global Bandwidth limiter Register DMA_GLBLIMITER

Bit	31	30	29	28	27	26	25	24	23	22	21	20	19	18	17	16
Name																
Type																
Reset																

MediaTek Confidential Release for Cenon WCX

This document contains information that is proprietary to MediaTek Inc.

Unauthorized reproduction or disclosure of this information in whole or in part is strictly prohibited.

Bit	15	14	13	12	11	10	9	8	7	6	5	4	3	2	1	0
Name									GLBLIMITER							
Type									WO							
Reset									0							

Please refer to the expression in DMAn_LIMITER for detailed note. The value of DMA_GLBLIMITER is set to all DMA channels, from 1 to 15.

DMA+0n00h DMA Channel n Source Address Register DMAn_SRC

Bit	31	30	29	28	27	26	25	24	23	22	21	20	19	18	17	16
Name	SRC[31:16]															
Type	R/W															
Reset	0															
Bit	15	14	13	12	11	10	9	8	7	6	5	4	3	2	1	0
Name	SRC[15:0]															
Type	R/W															
Reset	0															

The above registers contain the base or current source address that the DMA channel is currently operating on. Writing to this register specifies the base address of transfer source for a DMA channel. Before programming these registers, the software program should make sure that STR in DMAn_START is set to 0; that is, the DMA channel is stopped and disabled completely. Otherwise, the DMA channel may run out of order. Reading this register returns the address value from which the DMA is reading.

Note that n is 1 and SRC can't be TCM address. TCM is not accessible by DMA..

SRC **SRC**[31:0] specifies the base or current address of transfer source for a DMA channel, i.e. channel 1.
WRITE Base address of transfer source
READ Address from which DMA is reading

DMA+0n04h DMA Channel n Destination Address Register DMAn_DST

Bit	31	30	29	28	27	26	25	24	23	22	21	20	19	18	17	16
Name	DST[31:16]															
Type	R/W															
Reset	0															
Bit	15	14	13	12	11	10	9	8	7	6	5	4	3	2	1	0
Name	DST[15:0]															
Type	R/W															

MediaTek Confidential Release for Cenon WCX

This document contains information that is proprietary to MediaTek Inc.

Unauthorized reproduction or disclosure of this information in whole or in part is strictly prohibited.

Reset	0

The above registers contain the base or current destination address that the DMA channel is currently operating on.. Writing to this register specifies the base address of the transfer destination for a DMA channel. Before programming these registers, the software should make sure that STR in DMAn_START is set to '0'; that is, the DMA channel is stopped and disabled completely. Otherwise, the DMA channel may run out of order. Reading this register returns the address value to which the DMA is writing.

Note that n is 1 and DST can't be TCM address. TCM is not accessible by DMA.

DST **DST**[31:0] specifies the base or current address of transfer destination for a DMA channel, i.e. channel 1

WRITE Base address of transfer destination.

READ Address to which DMA is writing.

DMA+0n08h DMA Channel n Wrap Point Count Register DMAn_WPPT

Bit	31	30	29	28	27	26	25	24	23	22	21	20	19	18	17	16
Name																
Type																
Reset																
Bit	15	14	13	12	11	10	9	8	7	6	5	4	3	2	1	0
Name	WPPT[15:0]															
Type	R/W															
Reset	0															

The above registers are to specify the transfer count required to perform before the jump point. This can be used to support ring buffer or double buffer style memory accesses. To enable this function, two control bits, WPEN and WPSD, in DMA control register must be programmed. See the following register description for more details. If the transfercounter in the DMA engine matches this value, an address jump occurs, and the next address is the address specified in DMAn_WPTO. Before programming these registers, the software should make sure that STR in DMAn_START is set to '0', that is the DMA channel is stopped and disabled completely. Otherwise, the DMA channel may run out of order. To enable this function, WPEN in DMA_CON is set. Note that the total size of data specify in the wrap point count in a DMA channel is determined by LEN together with the SIZE in DMAn_CON, i.e. WPPT x SIZE.

Note that n is from 1 to 9.

MediaTek Confidential Release for Cenon WCX

This document contains information that is proprietary to MediaTek Inc.

Unauthorized reproduction or disclosure of this information in whole or in part is strictly prohibited.

WPPT **WPPT**[15:0] specifies the amount of the transfer count from start to jumping point for a DMA channel, i.e. channel 1 – 9.

WRITE Wrap point transfer count.

READ Value set by the programmer.

DMA+0n0Ch DMA Channel n Wrap To Address Register DMAn_WPTO

Bit	31	30	29	28	27	26	25	24	23	22	21	20	19	18	17	16
Name	WPTO[31:16]															
Type	R/W															
Reset	0															
Bit	15	14	13	12	11	10	9	8	7	6	5	4	3	2	1	0
Name	WPTO[15:0]															
Type	R/W															
Reset	0															

The above registers specify the address of the jump destination of a given DMA transfer to support ring buffer or double buffer style memory accesses. To enable this function, set the two control bits, WPEN and WPSD, in the DMA control register . See the following register description for more details. Before programming these registers, the software should make sure that STR in DMAn_START is set to ‘0’, that is the DMA channel is stopped and disabled completely. Otherwise, the DMA channel may run out of order. To enable this function, WPEN in DMA_CON should be set.

Note that n is from 1 to 9.

WPTO **WPTO**[31:0] specifies the address of the jump point for a DMA channel, i.e. channel 1 – 9.

WRITE Address of the jump destination.

READ Value set by the programmer.

DMA+0n10h DMA Channel n Transfer Count Register DMAn_COUNT

Bit	31	30	29	28	27	26	25	24	23	22	21	20	19	18	17	16
Name																
Type																
Reset																
Bit	15	14	13	12	11	10	9	8	7	6	5	4	3	2	1	0
Name	LEN															
Type	R/W															
Reset	0															

This register specifies the amount of total transfer count that the DMA channel is required to perform. Upon completion, the DMA channel generates an interrupt request to the processor while ITEN in DMAn_CON is set as ‘1’.

MediaTek Confidential Release for Cenon WCX

This document contains information that is proprietary to MediaTek Inc.

Unauthorized reproduction or disclosure of this information in whole or in part is strictly prohibited.

Note that the total size of data being transferred by a DMA channel is determined by LEN together with the SIZE in DMAn_CON, i.e. LEN x SIZE.

For virtual FIFO DMA, this register is used to configure the RX threshold and TX threshold. Interrupt is triggered while FIFO count >= RX threshold in RX path or FIFO count =< TX threshold in TX path. Note that ITEN bit in DMA_CON register shall be set, or no interrupt is issued.

Note that n is from 1 to 15.

LEN The amount of total transfer count

DMA+0n14h DMA Channel n Control Register DMAn_CON

Bit	31	30	29	28	27	26	25	24	23	22	21	20	19	18	17	16
Name							MAS							DIR	WPEN	WPSD
Type								R/W						R/W	R/W	R/W
Reset								0						0	0	0
Bit	15	14	13	12	11	10	9	8	7	6	5	4	3	2	1	0
Name	ITEN					BURST					B2W	DRQ	DINC	SINC	SIZE	
Type	R/W					R/W					R/W	R/W	R/W	R/W	R/W	
Reset	0					0					0	0	0	0	0	

This register contains all the available control schemes for a DMA channel that is ready for software programmer to configure. Note that all these fields cannot be changed while DMA transfer is in progress or an unexpected situation may occur.

Note that n is from 1 to 15.

SIZE Data size within the confine of a bus cycle per transfer.
These bits confines the data transfer size between source and destination to the specified value for individual bus cycle. The size is in terms of byte and has maximum value of 4 bytes. It is mainly decided by the data width of a DMA master.

- **00** Byte transfer/1 byte
- **01** Half-word transfer/2 bytes
- **10** Word transfer/4 bytes
- **11** Reserved

SINC Incremental source address. Source addresses increase every transfer. If the setting of SIZE is Byte, Source addresses increase by 1 every single transfer. If Half-Word, increase by 2; and if Word, increase by 4.

- **0** Disable
- **1** Enable

MediaTek Confidential Release for Cenon WCX

This document contains information that is proprietary to MediaTek Inc.

Unauthorized reproduction or disclosure of this information in whole or in part is strictly prohibited.

DINC Incremental destination address. Destination addresses increase every transfer. If the setting of SIZE is Byte, Destination addresses increase by 1 every single transfer. If Half-Word, increase by 2; and Iif Word, increase by 4.

0 Disable

1 Enable

DREQ Throttle and handshake control for DMA transfer

0 No throttle control during DMA transfer or transfers occurred only between memories

1 Hardware handshake management

The DMA master is able to throttle down the transfer rate by way of request-grant handshake.

B2W Word to Byte or Byte to Word transfer for the applications of transferring non-word-aligned-address data to word-aligned-address data. Note that BURST is set to 4-beat burst while enabling this function, and the SIZE is set to Byte.

NO effect on channel 1 & 10 - 15.

0 Disable

1 Enable

BURST Transfer Type. Burst-type transfers have better bus efficiency. Mass data movement is recommended to use this kind of transfer. However, note that burst-type transfer does not stop until all of the beats in a burst are completed or transfer length is reached. FIFO threshold of peripherals must be configured carefully while being used to move data from/to the peripherals.

What transfer type can be used is restricted by the SIZE. If SIZE is 00b, i.e. byte transfer, all of the four transfer types can be used. If SIZE is 01b, i.e. half-word transfer, 16-beat incrementing burst cannot be used. If SIZE is 10b, i.e. word transfer, only single and 4-beat incrementing burst can be used.

NO effect on channel 10 - 15.

000 Single

001 Reserved

010 4-beat incrementing burst

011 Reserved

100 8-beat incrementing burst

101 Reserved

110 16-beat incrementing burst

111 Reserved

ITEN DMA transfer completion interrupt enable.

0 Disable

1 Enable

WPSD The side using address-wrapping function. Only one side of a DMA channel can activate address-wrapping function at a time.

MediaTek Confidential Release for Cenon WCX
MediaTek Confidential Release for Cenon WCX

This document contains information that is proprietary to MediaTek Inc.

Unauthorized reproduction or disclosure of this information in whole or in part is strictly prohibited.

NO effect on channel 10 - 15.

0 Address-wrapping on source .

1 Address-wrapping on destination.

WPEN Address-wrapping for ring buffer and double buffer. The next address of DMA jumps to WRAP TO address when the current address matches WRAP POINT count.

NO effect on channel 10 - 15.

0 Disable

1 Enable

DIR Directions of DMA transfer for half-size and Virtual FIFO DMA channels, i.e. channels 2~15. The direction is from the perspective of the DMA masters. WRITE means read from master and then write to the address specified in DMA_PGMADDR, and vice versa.

NO effect on channel 1

0 Read

1 Write

MAS Master selection. Specifies which master occupies this DMA channel. Once assigned to certain master, the corresponding DREQ and DACK are connected. For half-size and Virtual FIFO DMA channels, i.e. channels 2 ~ 15, a predefined address is assigned as well.

00000 SIM
00001 MSDC
00010 Reserved
00011 Reserved
00100 USB1 TX
00101 USB1 RX
00110 USB2 TX
00111 USB2 RX
01000 UART1 TX
01001 UART1 RX
01010 UART2 TX
01011 UART2 RX
01100 UART3 TX
01101 UART3 RX
01110 DSP-DMA 1
01111 Reserved
10000 Reserved
10001 I2C dual TX
10010 I2C dual RX

MediaTek Confidential Release for Cenon WCX

This document contains information that is proprietary to MediaTek Inc.

Unauthorized reproduction or disclosure of this information in whole or in part is strictly prohibited.

10011 SIM2
10011 DSP-DMA 2

OTHERS Reserved

DMA+0n18h DMA Channel n Start Register DMAn_START

Bit	31	30	29	28	27	26	25	24	23	22	21	20	19	18	17	16
Name																
Type																
Reset																
Bit	15	14	13	12	11	10	9	8	7	6	5	4	3	2	1	0
Name	STR															
Type	R/W															
Reset	0															

This register controls the activity of a DMA channel. Note that prior to setting STR to "1", all the configurations should be done by giving proper value to the registers. Note also that once the STR is set to "1", the hardware does not clear it automatically no matter if the DMA channel accomplishes the DMA transfer or not. In other works, the value of **STR** stays "1" regardless of the completion of DMA transfer. Therefore, the software program should be sure to clear **STR** to "0" before restarting another DMA transfer. If this bit is cleared to "0" during DMA transfer is active, software should polling MDDMA_GLBSTA **RUN_N** after this bit is cleared to ensure current DMA transfer is terminated by DMA engine.

Note that n is from 1 to 15.

STR Start control for a DMA channel.
- **0** The DMA channel is stopped.
- **1** The DMA channel is started and running.

DMA+0n1Ch DMA Channel n Interrupt Status Register DMAn_INTSTA

Bit	31	30	29	28	27	26	25	24	23	22	21	20	19	18	17	16
Name																
Type																
Reset																
Bit	15	14	13	12	11	10	9	8	7	6	5	4	3	2	1	0
Name	INT															
Type	RO															
Reset	0															

MediaTek Confidential Release for Cenon WCX

This document contains information that is proprietary to MediaTek Inc.

Unauthorized reproduction or disclosure of this information in whole or in part is strictly prohibited.

This register shows the interrupt status of a DMA channel. It has the same value as DMA_GLBSTA.

Note that n is from 1 to 14.

INT Interrupt Status for DMA Channel

- **0** No interrupt request is generated.
- **1** One interrupt request is pending and waiting for service.

DMA+0n20h DMA Channel n Interrupt Acknowledge Register DMAn_ACKINT

Bit	31	30	29	28	27	26	25	24	23	22	21	20	19	18	17	16
Name																
Type																
Reset																
Bit	15	14	13	12	11	10	9	8	7	6	5	4	3	2	1	0
Name	ACK															
Type	WO															
Reset	0															

This register is used to acknowledge the current interrupt request associated with the completion event of a DMA channel by software program. Note that this is a write-only register, and any read to it returns a value of “0”.

Note that n is from 1 to 15.

ACK Interrupt acknowledge for the DMA channel

- **0** No effect
- **1** Interrupt request is acknowledged and should be relinquished.

DMA+0n24h DMA Channel n Remaining Length of Current Transfer DMAn_RLCT

Bit	31	30	29	28	27	26	25	24	23	22	21	20	19	18	17	16
Name																
Type																
Reset																
Bit	15	14	13	12	11	10	9	8	7	6	5	4	3	2	1	0
Name	RLCT															
Type	RO															
Reset	0															

This register is to reflect the left count of the transfer. Note that this value is transfer count not the transfer data size.

Note that n is from 1 to 9.

MediaTek Confidential Release for Cenon WCX

This document contains information that is proprietary to MediaTek Inc.

Unauthorized reproduction or disclosure of this information in whole or in part is strictly prohibited.

DMA+0n28h DMA Bandwidth limiter Register DMAn_LIMITER

Bit	31	30	29	28	27	26	25	24	23	22	21	20	19	18	17	16
Name																
Type																
Reset																
Bit	15	14	13	12	11	10	9	8	7	6	5	4	3	2	1	0
Name									LIMITER							
Type									R/W							
Reset									0							

This register is to suppress the Bus utilization of the DMA channel. The value is from 0 to 255. 0 means no limitation, and 255 means totally banned. The value between 0 and 255 means certain DMA can have permission to use AHB every (4 X n) AHB clock cycles.

Note that it is not recommended to limit the Bus utilization of the DMA channels because this increases the latency of response to the masters, and the transfer rate decreases as well. Before using it, programmer must make sure that the bus masters have some protective mechanism to avoid entering the wrong states.

Note that n is from 1 to 15.

LIMITER from 0 to 255. 0 means no limitation, 255 means totally banned, and others mean Bus access permission every (4 X n) AHB clock.

DMA+0n2Ch DMA Channel n Programmable Address Register DMAn_PGMADDR

Bit	31	30	29	28	27	26	25	24	23	22	21	20	19	18	17	16
Name	PGMADDR[31:16]															
Type	R/W															
Reset	0															
Bit	15	14	13	12	11	10	9	8	7	6	5	4	3	2	1	0
Name	PGMADDR[15:0]															
Type	R/W															
Reset	0															

The above registers specify the address for a half-size DMA channel. This address represents a source address if DIR in DMA_CON is set to 0, and represents a destination address if DIR in DMA_CON is set to 1. Before being able to program these register, the software should make sure that STR in DMAn_START is set to '0', that is the DMA channel is stopped and disabled completely. Otherwise, the DMA channel may run out of order.

Note that n is from 2 to 15 and PGMADDR can't be TCM address. TCM is not accessible by DMA.

PGMADDR **PGMADDR**[31:0] specifies the addresses for a half-size or a Virtual FIFO DMA channel, i.e. channel 2 – 15.

MediaTek Confidential Release for Cenon WCX

This document contains information that is proprietary to MediaTek Inc.

Unauthorized reproduction or disclosure of this information in whole or in part is strictly prohibited.

WRITE Base address of transfer source or destination according to DIR bit
READ Current address of the transfer.

MediaTek Confidential Release for Cenon WCX

DMA+0n30h DMA Channel n Virtual FIFO Write Pointer Register DMAn_WRPTR

Bit	31	30	29	28	27	26	25	24	23	22	21	20	19	18	17	16
Name	WRPTR[31:16]															
Type	RO															
Bit	15	14	13	12	11	10	9	8	7	6	5	4	3	2	1	0
Name	WRPTR[15:0]															
Type	RO															

Note that n is from 10 to 15.

WRPTR Virtual FIFO Write Pointer.

DMA+0n34h DMA Channel n Virtual FIFO Read Pointer Register DMAn_RDPTR

Bit	31	30	29	28	27	26	25	24	23	22	21	20	19	18	17	16
Name	RDPTR[31:16]															
Type	RO															
Bit	15	14	13	12	11	10	9	8	7	6	5	4	3	2	1	0
Name	RDPTR[15:0]															
Type	RO															

Note that n is from 10 to 15.

RDPTR Virtual FIFO Read Pointer.

DMA+0n38h DMA Channel n Virtual FIFO Data Count Register DMAn_FFCNT

Bit	31	30	29	28	27	26	25	24	23	22	21	20	19	18	17	16
Name																
Type																
Bit	15	14	13	12	11	10	9	8	7	6	5	4	3	2	1	0
Name	FFCNT															
Type	RO															

This document contains information that is proprietary to MediaTek Inc.

Unauthorized reproduction or disclosure of this information in whole or in part is strictly prohibited.

Note that n is from 10 to 15.

FFCNT To display the number of data stored in FIFO. 0 means FIFO empty, and FIFO is full if FFCNT is equal to FFSIZE.

DMA+0n3Ch DMA Channel n Virtual FIFO Status Register DMAn_FFSTA

Bit	31	30	29	28	27	26	25	24	23	22	21	20	19	18	17	16
Name																
Type																
Reset																
Bit	15	14	13	12	11	10	9	8	7	6	5	4	3	2	1	0
Name														ALT	EMPTY	FULL
Type														RO	RO	RO
Reset														1	1	1

Note that n is from 10 to 15.

FULL To indicate FIFO is full.

- **0** Not Full
- **1** Full

EMPTY To indicate FIFO is empty.

- **0** Not Empty
- **1** Empty

ALT To indicate FIFO Count is larger than ALTLEN. DMA issues an alert signal to UART to enable UART flow control.

- **0** Not reach alert region.
- **1** Reach alert region.

DMA+0n40h DMA Channel n Virtual FIFO Alert Length Register DMAn_ALTLEN

Bit	31	30	29	28	27	26	25	24	23	22	21	20	19	18	17	16
Name																
Type																
Reset																
Bit	15	14	13	12	11	10	9	8	7	6	5	4	3	2	1	0
Name											ALTLEN					
Type											R/W					
Reset											0					

Note that n is from 10 to 15.

MediaTek Confidential Release for Cenon WCX

This document contains information that is proprietary to MediaTek Inc.

Unauthorized reproduction or disclosure of this information in whole or in part is strictly prohibited.

ALTLEN Specifies the Alert Length of Virtual FIFO DMA. Once the remaining FIFO space is less than ALTLEN, an alert signal is issued to UART to enable flow control. Normally, ALTLEN shall be larger than 16 for UART application.

DMA+0n44h DMA Channel n Virtual FIFO Size Register DMAn_FFSIZE

Bit	31	30	29	28	27	26	25	24	23	22	21	20	19	18	17	16
Name																
Type																
Reset																
Bit	15	14	13	12	11	10	9	8	7	6	5	4	3	2	1	0
Name	FFSIZE															
Type	R/W															
Reset	0															

Note that n is from 10 to 15.

FFSIZE Specifies the FIFO Size of Virtual FIFO DMA.

MediaTek Confidential Release for Cenon WCX

This document contains information that is proprietary to MediaTek Inc.

Unauthorized reproduction or disclosure of this information in whole or in part is strictly prohibited.

3.2 Interrupt Controller

3.2.1 General Description

Figure 27 outlines the major functionality of the MCU Interrupt Controller. The interrupt controller processes all interrupt sources coming from external lines and internal MCU peripherals. Since ARM7EJ-S core supports two levels of interrupt latency, this controller generates two request signals: FIQ for fast, low latency interrupt request and IRQ for more general interrupts with lower priority.

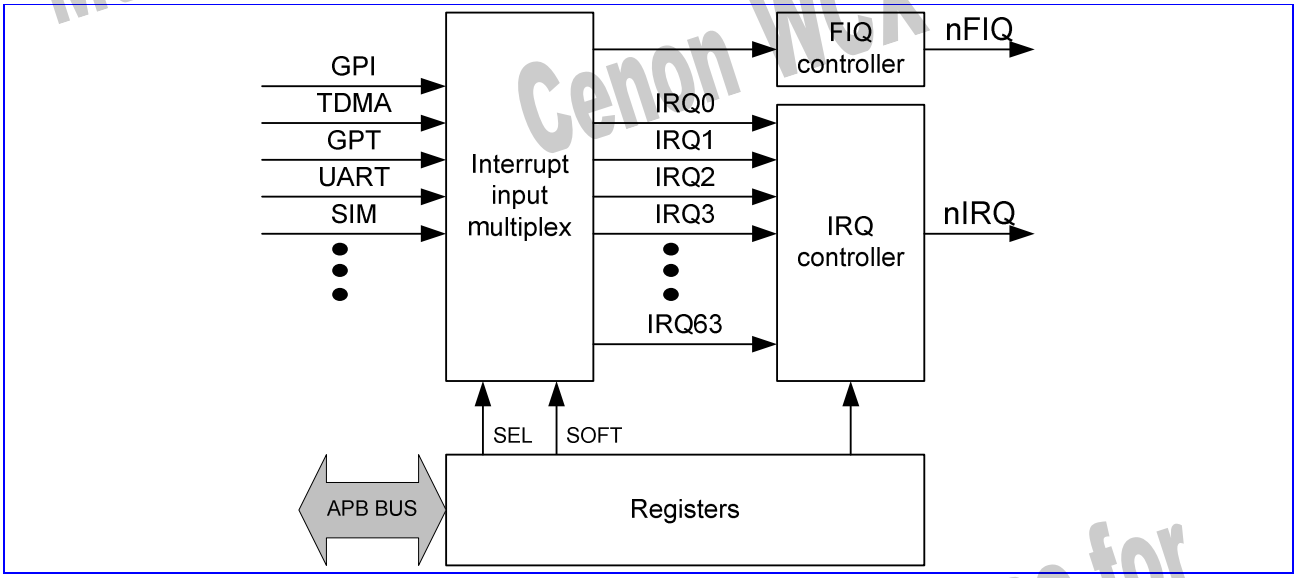

Figure 27 Block Diagram of the Interrupt Controller

One and only one of the interrupt sources can be assigned to FIQ Controller and have the highest priority in requesting timing critical service. All the others share the same IRQ signal by connecting them to IRQ Controller. The IRQ Controller manages up 64 interrupt lines of IRQ0 to IRQ63 with fixed priority in descending order.

The Interrupt Controller provides a simple software interface by mean of registers to manipulate the interrupt request shared system. IRQ Selection Registers and FIQ Selection Register determine the source priority and connecting relation among sources and interrupt lines. IRQ Source Status Register allows software program to identify the source of interrupt that generates the interrupt request. IRQ Mask Register provides software to mask out undesired sources some time. End of Interrupt Register permits software program to indicate to the controller that a certain interrupt service routine has been finished.

MediaTek Confidential Release for Cenon WCX

This document contains information that is proprietary to MediaTek Inc.

Unauthorized reproduction or disclosure of this information in whole or in part is strictly prohibited.

Binary coded version of IRQ Source Status Register is also made available for software program to helpfully identify the interrupt source. Note that while taking advantage of this feature, it should also take the binary coded version of End of Interrupt Register coincidently.

The essential Interrupt Table of ARM7EJ-S core is shown as **Table 37**.

Address	Description
00000000h	System Reset
00000018h	IRQ
0000001Ch	FIQ

Table 37 Table of ARM7EJ-S

3.2.1.1 Interrupt Source Masking

Interrupt controller provides the function of Interrupt Source Masking by the way of programming MASK register. Any of them can be masked individually.

However, because of the bus latency, the masking takes effect no earlier than 3 clock cycles later. In this time, the to-be-masked interrupts could come in and generate an IRQ pulse to MCU, and then disappear immediately. This IRQ forces MCU going to Interrupt Service Routine and polling Status Register (IRQ_STA2), but the register shows there is no interrupt. This might cause MCU malfunction.

There are two ways for programmer to protect their software.

1. Return from ISR (Interrupt Service Routine) immediately while the Status register shows no interrupt.
2. Set I bit of MCU before doing Interrupt Masking, and then clear it after Interrupt Masking done.

Both avoid the problem, but the first item is recommended in the ISR.

3.2.1.2 External Interrupt

This interrupt controller also integrates an External Interrupt Controller that can support up to 10 interrupt requests coming from external sources, the EINT0~6+10~12, and 3 WakeUp interrupt requests, i.e. EINT7~9, coming from peripherals used to inform system to resume the system clock. All EINT sources can wake up system.

The external interrupts can be used for different kind of applications, mainly for event detections: detection of hand free connection, detection of hood opening, detection of battery charger connection.

Since the external event may be unstable in a certain period, a de-bounce mechanism is introduced to ensure the functionality. The circuitry is mainly used to verify that the input signal remains stable for a programmable number of periods of the clock. When this condition is satisfied, for the appearance or the disappearance of the input, the output

MediaTek Confidential Release for Cenon WCX

This document contains information that is proprietary to MediaTek Inc.

Unauthorized reproduction or disclosure of this information in whole or in part is strictly prohibited.

of the de-bounce logic changes to the desired state. Note that, because it uses the 32768Hz slow clock for performing the de-bounce process, the parameter of de-bounce period and de-bounce enable takes effect no sooner than one 32768Hz clock cycle (~30.52us) after the software program sets them. When the sources of External Interrupt Controller are used to resume the system clock in sleep mode, the de-bounce mechanism must be enabled. However, the polarities of EINTs are clocked with the system clock. Any changes to them take effect immediately.

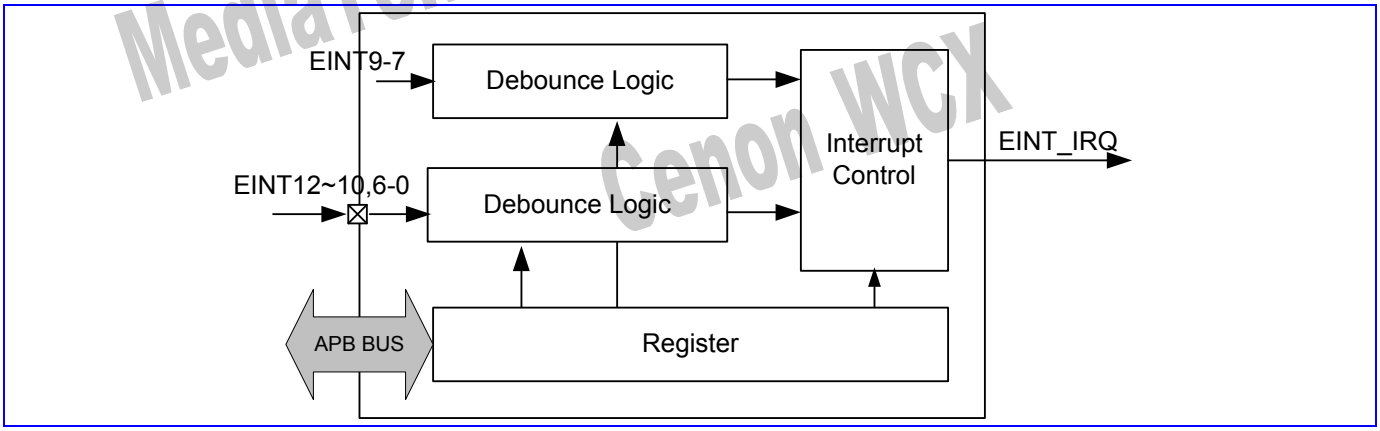

Figure 28 Block Diagram of External Interrupt Controller

3.2.1.3 External Interrupt Input Pins

EINT	Edge / Level HW Debounce	SOURCE PIN	SUPPLEMENT
EINT0	Edge / Level Yes	if(GPIO26_M==1) then EINT0=GPIO26(EINT0) else EINT0=1	1. GPIOs should be in the input mode and are effected by GPIO data input inversion registers. 2. GPIOxx_M is the GPIO mode control registers, please refer to GPIO segment.
EINT1	Edge / Level Yes	if(GPIO27_M==1) then EINT1=GPIO27(EINT1) else EINT1=1	

EINT2	Edge / Level Yes	if(GPIO43_M==2) then EINT2=GPIO43(KCOL7) else
		if(GPIO42_M==7) then EINT2=GPIO42(ECS3_B) else
		if(urxd1_spmode==1) then EINT2=URXD1 else EINT2=1	

EINT3	Edge / Level Yes	if(GPIO45_M==2) then EINT3=GPIO45(KROW7) else if(utxd1_spmode==1) then EINT3=UTXD1 else EINT3=1	
EINT4	Edge / Level Yes	if(GPIO1_M==2) then EINT4=GPIO1(KCOL6) else if(GPIO70_M==2) then EINT4=GPIO70 else EINT4=1	
EINT5	Edge / Level Yes	if(GPIO8_M==2) then EINT5=GPIO8(KROW5) else if(GPIO24_M==5) then EINT5=GPIO24(UCTS1_B) else EINT5=1	

MediaTek Confidential Release for Cenon WCX

This document contains information that is proprietary to MediaTek Inc.

Unauthorized reproduction or disclosure of this information in whole or in part is strictly prohibited.

EINT6	Edge / Level Yes	if(GPIO36_M==5) then EINT6=GPIO36(MCINS) else if(GPIO25_M==5) then EINT6=GPIO25(URTS1_B) else EINT6=1	
EINT7	Edge / Level Yes	Charger detect interrupt (Active low)	
EINT8	Edge / Level Yes	PMU OC interrupt (Active low)	
EINT9	Edge / Level Yes	PMU OV protection interrupt (Active low)	
EINT10	Edge / Level Yes	URXD1	
EINT11	Edge / Level Yes	if(GPIO22_M==1) then EINT11=GPIO22(URXD2) else EINT11=1	
EINT12	Edge / Level Yes	if(GPIO20_M==1) then EINT12=GPIO20(URXD3) else EINT12=1	
EINT13	Edge / Level Yes	Reserved	

Table 38 EINT source

REGISTER ADDRESS	REGISTER NAME	SYNONYM
0x8101_0000h	IRQ Selection 0 Register	IRQ_SEL0
0x8101_0004h	IRQ Selection 1 Register	IRQ_SEL1
0x8101_0008h	IRQ Selection 2 Register	IRQ_SEL2
0x8101_000ch	IRQ Selection 3 Register	IRQ_SEL3
0x8101_0010h	IRQ Selection 4 Register	IRQ_SEL4
0x8101_0014h	IRQ Selection 5 Register	IRQ_SEL5
0x8101_0018h	IRQ Selection 6 Register	IRQ_SEL6
0x8101_001ch	IRQ Selection 7 Register	IRQ_SEL7
0x8101_0020h	IRQ Selection 8 Register	IRQ_SEL8
0x8101_0024h	IRQ Selection 9 Register	IRQ_SEL9
0x8101_0028h	IRQ Selection 10 Register	IRQ_SEL10
0x8101_002ch	IRQ Selection 11 Register	IRQ_SEL11
0x8101_0030h	IRQ Selection 12 Register	IRQ_SEL12
0x8101_0034h	IRQ Selection 13 Register	IRQ_SEL13
0x8101_0038h	IRQ Selection 14 Register	IRQ_SEL14

MediaTek Confidential Release for Cenon WCX

This document contains information that is proprietary to MediaTek Inc.

Unauthorized reproduction or disclosure of this information in whole or in part is strictly prohibited.

0x8101_003ch	IRQ Selection 15 Register	IRQ_SEL15
0x8101_006ch	FIQ Selection Register	FIQ_SEL
0x8101_0070h	IRQ Mask Register (low)	IRQ_MASKL
0x8101_0074h	IRQ Mask Register (high)	IRQ_MASKH
0x8101_0080h	IRQ Mask Clear Register (low)	IRQ_MASK_CLRL
0x8101_0084h	IRQ Mask Clear Register (high)	IRQ_MASK_CLRH
0x8101_0090h	IRQ Mask Set Register (low)	IRQ_MASK_SETL
0x8101_0094h	IRQ Mask Set Register (high)	IRQ_MASK_SETH
0x8101_00a0h	IRQ End of Interrupt Register (low)	IRQ_EOIL
0x8101_00a4h	IRQ End of Interrupt Register (high)	IRQ_EOIH
0x8101_00b0h	IRQ Sensitive Register (low)	IRQ_SENSL
0x8101_00b4h	IRQ Sensitive Register (high)	IRQ_SENSH
0x8101_00c0h	IRQ Software Interrupt Register (low)	IRQ_SOFTL
0x8101_00c4h	IRQ Software Interrupt Register (high)	IRQ_SOFTH
0x8101_00d0h	FIQ Control Register	FIQ_CON
0x8101_00d4h	FIQ End of Interrupt Register	FIQ_EOI
0x8101_00d8h	Binary Coded Value of IRQ_STATUS	IRQ_STA2
0x8101_00dch	Binary Coded Value of IRQ_EOI	IRQ_EOI2
0x8101_0100h	EINT Status Register	EINT_STA
0x8101_0104h	EINT Mask Register	EINT_MASK
0x8101_0108h	EINT Mask Clear Register	EINT_MASK_CLR
0x8101_010ch	EINT Mask Set Register	EINT_MASK_SET
0x8101_0110h	EINT Interrupt Acknowledge Register	EINT_INTACK
0x8101_0114h	EINT Sensitive Register	EINT_SENS
0x8101_0118h	EINT Software Interrupt Register	EINT_SOFT
0x8101_0120h	EINT0 De-bounce Control Register	EINT0_CON
0x8101_0130h	EINT1 De-bounce Control Register	EINT1_CON
0x8101_0140h	EINT2 De-bounce Control Register	EINT2_CON
0x8101_0150h	EINT3 De-bounce Control Register	EINT3_CON
0x8101_0160h	EINT4 De-bounce Control Register	EINT4_CON
0x8101_0170h	EINT5 De-bounce Control Register	EINT5_CON
0x8101_0180h	EINT6 De-bounce Control Register	EINT6_CON

MediaTek Confidential Release for Cenon WCX

This document contains information that is proprietary to MediaTek Inc.

Unauthorized reproduction or disclosure of this information in whole or in part is strictly prohibited.

0x8101_0190h	EINT7 De-bounce Control Register	EINT7_CON
0x8101_01a0h	EINT8 De-bounce Control Register	EINT8_CON
0x8101_01b0h	EINT9 De-bounce Control Register	EINT9_CON
0x8101_01c0h	EINT10 De-bounce Control Register	EINT10_CON
0x8101_01d0h	EINT11 De-bounce Control Register	EINT11_CON
0x8101_01e0h	EINT12 De-bounce Control Register	EINT12_CON
0x8101_01f0h	EINT13 De-bounce Control Register	EINT13_CON

Table 39 Interrupt Controller Register Map

3.2.2 Register Definitions

0x8101_0000 IRQ Selection 0 Register IRQ_SEL0

Bit	31	30	29	28	27	26	25	24	23	22	21	20	19	18	17	16
Name			IRQ3								IRQ2					
Type			R/W								R/W					
Reset			3								2					
Bit	15	14	13	12	11	10	9	8	7	6	5	4	3	2	1	0
Name			IRQ1								IRQ0					
Type			R/W								R/W					
Reset			1								0					

0x8101_0004 IRQ Selection 1 Register IRQ_SEL1

Bit	31	30	29	28	27	26	25	24	23	22	21	20	19	18	17	16
Name			IRQ7								IRQ6					
Type			R/W								R/W					
Reset			7								6					
Bit	15	14	13	12	11	10	9	8	7	6	5	4	3	2	1	0
Name			IRQ5								IRQ4					
Type			R/W								R/W					
Reset			5								4					

0x8101_0008 IRQ Selection 2 Register IRQ_SEL2

Bit	31	30	29	28	27	26	25	24	23	22	21	20	19	18	17	16
Name			IRQB								IRQA					
Type			R/W								R/W					
Reset			0xb								0xa					
Bit	15	14	13	12	11	10	9	8	7	6	5	4	3	2	1	0
Name			IRQ9								IRQ8					
Type			R/W								R/W					
Reset			9								8					

MediaTek Confidential Release for Cenon WCX

This document contains information that is proprietary to MediaTek Inc.

Unauthorized reproduction or disclosure of this information in whole or in part is strictly prohibited.

MediaTek Confidential Release for Cenon WCX

0x8101_000c IRQ Selection 3 Register IRQ_SEL3

Bit	31	30	29	28	27	26	25	24	23	22	21	20	19	18	17	16
Name			IRQF								IRQE					
Type			R/W								R/W					
Reset			0xf								0xe					
Bit	15	14	13	12	11	10	9	8	7	6	5	4	3	2	1	0
Name			IRQD								IRQC					
Type			R/W								R/W					
Reset			0xd								0xc					

0x8101_0010 IRQ Selection 4 Register IRQ_SEL4

Bit	31	30	29	28	27	26	25	24	23	22	21	20	19	18	17	16
Name			IRQ13								IRQ12					
Type			R/W								R/W					
Reset			0x13								0x12					
Bit	15	14	13	12	11	10	9	8	7	6	5	4	3	2	1	0
Name			IRQ11								IRQ10					
Type			R/W								R/W					
Reset			0x11								0x10					

0x8101_0014 IRQ Selection 5 Register IRQ_SEL5

Bit	31	30	29	28	27	26	25	24	23	22	21	20	19	18	17	16
Name			IRQ17								IRQ16					
Type			R/W								R/W					
Reset			0x17								0x16					
Bit	15	14	13	12	11	10	9	8	7	6	5	4	3	2	1	0
Name			IRQ15								IRQ14					
Type			R/W								R/W					
Reset			0x15								0x14					

0x8101_0018 IRQ Selection 6 Register IRQ_SEL6

Bit	31	30	29	28	27	26	25	24	23	22	21	20	19	18	17	16
Name			IRQ1B								IRQ1A					
Type			R/W								R/W					
Reset			0x1b								0x1a					
Bit	15	14	13	12	11	10	9	8	7	6	5	4	3	2	1	0
Name			IRQ19								IRQ18					
Type			R/W								R/W					
Reset			0x19								0x18					

0x8101_001c IRQ Selection 7 Register IRQ_SEL7

Bit	31	30	29	28	27	26	25	24	23	22	21	20	19	18	17	16
Name			IRQ1F								IRQ1E					

This document contains information that is proprietary to MediaTek Inc.

Unauthorized reproduction or disclosure of this information in whole or in part is strictly prohibited.

Type			R/W								R/W					
Reset			0x1f								0x1e					
Bit	15	14	13	12	11	10	9	8	7	6	5	4	3	2	1	0
Name			IRQ1D								IRQ1C					
Type			R/W								R/W					
Reset			0x1d								0x1c					

0x8101_0020 IRQ Selection 8 Register IRQ_SEL8

Bit	31	30	29	28	27	26	25	24	23	22	21	20	19	18	17	16
Name			IRQ23								IRQ22					
Type			R/W								R/W					
Reset			0x23								0x22					
Bit	15	14	13	12	11	10	9	8	7	6	5	4	3	2	1	0
Name			IRQ21								IRQ20					
Type			R/W								R/W					
Reset			0x21								0x20					

0x8101_0024 IRQ Selection 9 Register IRQ_SEL9

Bit	31	30	29	28	27	26	25	24	23	22	21	20	19	18	17	16
Name			IRQ27								IRQ26					
Type			R/W								R/W					
Reset			0x27								0x26					
Bit	15	14	13	12	11	10	9	8	7	6	5	4	3	2	1	0
Name			IRQ25								IRQ24					
Type			R/W								R/W					
Reset			0x25								0x24					

0x8101_0028 IRQ Selection 10 Register IRQ_SEL10

Bit	31	30	29	28	27	26	25	24	23	22	21	20	19	18	17	16
Name			IRQ2B								IRQ2A					
Type			R/W								R/W					
Reset			0x2b								0x2a					
Bit	15	14	13	12	11	10	9	8	7	6	5	4	3	2	1	0
Name			IRQ29								IRQ28					
Type			R/W								R/W					
Reset			0x29								0x28					

0x8101_002c IRQ Selection 11 Register IRQ_SEL11

Bit	31	30	29	28	27	26	25	24	23	22	21	20	19	18	17	16
Name			IRQ2F								IRQ2E					
Type			R/W								R/W					
Reset			0x2f								0x2e					
Bit	15	14	13	12	11	10	9	8	7	6	5	4	3	2	1	0
Name			IRQ2D								IRQ2C					
Type			R/W								R/W					

MediaTek Confidential Release for Cenon WCX

This document contains information that is proprietary to MediaTek Inc.

Unauthorized reproduction or disclosure of this information in whole or in part is strictly prohibited.

Reset			0x2d								0x2c					

0x8101_0030 IRQ Selection 12 Register IRQ_SEL12

Bit	31	30	29	28	27	26	25	24	23	22	21	20	19	18	17	16
Name			IRQ33								IRQ32					
Type			R/W								R/W					
Reset			0x33								0x32					
Bit	15	14	13	12	11	10	9	8	7	6	5	4	3	2	1	0
Name			IRQ31								IRQ30					
Type			R/W								R/W					
Reset			0x31								0x30					

0x8101_0034 IRQ Selection 13 Register IRQ_SEL13

Bit	31	30	29	28	27	26	25	24	23	22	21	20	19	18	17	16
Name			IRQ37								IRQ36					
Type			R/W								R/W					
Reset			0x37								0x36					
Bit	15	14	13	12	11	10	9	8	7	6	5	4	3	2	1	0
Name			IRQ35								IRQ34					
Type			R/W								R/W					
Reset			0x35								0x34					

0x8101_0038 IRQ Selection 14 Register IRQ_SEL14

Bit	31	30	29	28	27	26	25	24	23	22	21	20	19	18	17	16
Name			IRQ3B								IRQ3A					
Type			R/W								R/W					
Reset			0x3b								0x3a					
Bit	15	14	13	12	11	10	9	8	7	6	5	4	3	2	1	0
Name			IRQ39								IRQ38					
Type			R/W								R/W					
Reset			0x39								0x38					

0x8101_003c IRQ Selection 15 Register IRQ_SEL15

Bit	31	30	29	28	27	26	25	24	23	22	21	20	19	18	17	16
Name			IRQ3F								IRQ3E					
Type			R/W								R/W					
Reset			0x3f								0x3e					
Bit	15	14	13	12	11	10	9	8	7	6	5	4	3	2	1	0
Name			IRQ3D								IRQ3C					
Type			R/W								R/W					
Reset			0x3d								0x3c					

0x8101_006c FIQ Selection Register FIQ_SEL

Bit	31	30	29	28	27	26	25	24	23	22	21	20	19	18	17	16

MediaTek Confidential Release for Cenon WCX

This document contains information that is proprietary to MediaTek Inc.

Unauthorized reproduction or disclosure of this information in whole or in part is strictly prohibited.

Name																
Type																
Reset																
Bit	15	14	13	12	11	10	9	8	7	6	5	4	3	2	1	0
Name											FIQ					
Type											R/W					
Reset											0					

The IRQ/FIQ Selection Registers provide system designers with a flexible routing scheme to make various mappings of priority among interrupt sources possible. The registers allow the interrupt sources to be mapped onto interrupt requests of either FIQ or IRQ. While only one interrupt source can be assigned to FIQ, the other ones share IRQs by mapping them onto IRQ0 to IRQ3F connected to IRQ controller. The priority sequence of IRQ0~IRQ3F is fixed, i.e. IRQ0 > IRQ1 > IRQ2 > … > IRQ1E > IRQ3F. During the software configuration process, the Interrupt Source Code of desired interrupt source should be written into source field of the corresponding IRQ_SEL0-IRQ_SEL15/FIQ_SEL. 6-bit Interrupt Source Codes for all interrupt sources are fixed and defined.

Interrupt Source	STA2 (Hex)	STA
GPI_FIQ	0	00000001
TDMA_CTIRQ1	1	00000002
TDMA_CTIRQ2	2	00000004
DSP12CPU	3	00000008
SIM	4	00000010
DMA	5	00000020
TDMA	6	00000040
UART1	7	00000080
KP	8	00000100
UART2	9	00000200
GPTimer	A	00000400
EINT	B	00000800
USB	C	00001000
MSDC	D	00002000
RTC	E	00004000
Serial-Flash	F	00008000
LCD	10	00010000
UART3	11	00020000

MediaTek Confidential Release for Cenon WCX

This document contains information that is proprietary to MediaTek Inc.

Unauthorized reproduction or disclosure of this information in whole or in part is strictly prohibited.

GPI	12	00040000
WDT	13	00080000
DSP22CPU	14	00100000
RESIZER	15	00200000
Reserved	16	00400000
Reserved	17	00800000
IRDBG1	18	01000000
MSDC_CD	19	02000000
I2C	1A	04000000
IRDBG2	1B	08000000
SIM2	1C	10000000
Reserved	1D	20000000
CAM	1E	40000000
Touch Panel	1F	80000000
Sysram/rom	20	100000000
ROT_DMA	21	200000000
PAD2CAM	22	400000000
CHR_BATOFF	23	800000000
CHR_LDO	24	1000000000
PMU_THR[0]	25	2000000000
PMU_THR[1]	26	4000000000
PMU_THR[2]	27	8000000000
Reserved	28~3F	

Table 40 Interrupt Source Code

FIQ, IRQ0-3F The 6-bit content of this field corresponds to an Interrupt Source Code shown above.

0x8101_0070 IRQ Mask Register (low) IRQ_MASKL

Bit	31	30	29	28	27	26	25	24	23	22	21	20	19	18	17	16
Name	IRQ1F	IRQ1E	IRQ1D	IRQ1C	IRQ1B	IRQ1A	IRQ19	IRQ18	IRQ17	IRQ16	IRQ15	IRQ14	IRQ13	IRQ12	IRQ11	IRQ10
Type	R/W	R/W	R/W	R/W	R/W	R/W	R/W	R/W	R/W	R/W	R/W	R/W	R/W	R/W	R/W	R/W
Reset	1	1	1	1	1	1	1	1	1	1	1	1	1	1	1	1
Bit	15	14	13	12	11	10	9	8	7	6	5	4	3	2	1	0

MediaTek Confidential Release for Cenon WCX

This document contains information that is proprietary to MediaTek Inc.

Unauthorized reproduction or disclosure of this information in whole or in part is strictly prohibited.

Name	IRQF	IRQE	IRQD	IRQC	IRQB	IRQA	IRQ9	IRQ8	IRQ7	IRQ6	IRQ5	IRQ4	IRQ3	IRQ2	IRQ1	IRQ0
Type	R/W	R/W	R/W	R/W	R/W	R/W	R/W	R/W	R/W	R/W	R/W	R/W	R/W	R/W	R/W	R/W
Reset	1	1	1	1	1	1	1	1	1	1	1	1	1	1	1	1

0x8101_0074 IRQ Mask Register (high) IRQ_MASKH

Bit	31	30	29	28	27	26	25	24	23	22	21	20	19	18	17	16
Name	IRQ3F	IRQ3E	IRQ3D	IRQ3C	IRQ3B	IRQ3A	IRQ39	IRQ38	IRQ37	IRQ36	IRQ35	IRQ34	IRQ33	IRQ32	IRQ31	IRQ30
Type	R/W	R/W	R/W	R/W	R/W	R/W	R/W	R/W	R/W	R/W	R/W	R/W	R/W	R/W	R/W	R/W
Reset	1	1	1	1	1	1	1	1	1	1	1	1	1	1	1	1
Bit	15	14	13	12	11	10	9	8	7	6	5	4	3	2	1	0
Name	IRQ2F	IRQ2E	IRQ2D	IRQ2C	IRQ2B	IRQ2A	IRQ29	IRQ28	IRQ27	IRQ26	IRQ25	IRQ24	IRQ23	IRQ22	IRQ21	IRQ20
Type	R/W	R/W	R/W	R/W	R/W	R/W	R/W	R/W	R/W	R/W	R/W	R/W	R/W	R/W	R/W	R/W
Reset	1	1	1	1	1	1	1	1	1	1	1	1	1	1	1	1

This register contains a mask bit for each interrupt line in IRQ Controller. The register allows each interrupt source IRQ0 to IRQ3F to be disabled or masked separately under software control. After a system reset, all bit values are set to 1 to indicate that interrupt requests are prohibited.

IRQ0-3F Mask control for the associated interrupt source in the IRQ controller

- **0** Interrupt is enabled
- **1** Interrupt is disabled

0x8101_0080 IRQ Mask Clear Register (low) IRQ_MASK_CLRL

Bit	31	30	29	28	27	26	25	24	23	22	21	20	19	18	17	16
Name	IRQ1F	IRQ1E	IRQ1D	IRQ1C	IRQ1B	IRQ1A	IRQ19	IRQ18	IRQ17	IRQ16	IRQ15	IRQ14	IRQ13	IRQ12	IRQ11	IRQ10
Type	W1C	W1C	W1C	W1C	W1C	W1C	W1C	W1C	W1C	W1C	W1C	W1C	W1C	W1C	W1C	W1C
Bit	15	14	13	12	11	10	9	8	7	6	5	4	3	2	1	0
Name	IRQF	IRQE	IRQD	IRQC	IRQB	IRQA	IRQ9	IRQ8	IRQ7	IRQ6	IRQ5	IRQ4	IRQ3	IRQ2	IRQ1	IRQ0
Type	W1C	W1C	W1C	W1C	W1C	W1C	W1C	W1C	W1C	W1C	W1C	W1C	W1C	W1C	W1C	W1C

0x8101_0084 IRQ Mask Clear Register (high) IRQ_MASK_CLRH

Bit	31	30	29	28	27	26	25	24	23	22	21	20	19	18	17	16
Name	IRQ3F	IRQ3E	IRQ3D	IRQ3C	IRQ3B	IRQ3A	IRQ39	IRQ38	IRQ37	IRQ36	IRQ35	IRQ34	IRQ33	IRQ32	IRQ31	IRQ30
Type	W1C	W1C	W1C	W1C	W1C	W1C	W1C	W1C	W1C	W1C	W1C	W1C	W1C	W1C	W1C	W1C
Bit	15	14	13	12	11	10	9	8	7	6	5	4	3	2	1	0
Name	IRQ2F	IRQ2E	IRQ2D	IRQ2C	IRQ2B	IRQ2A	IRQ29	IRQ28	IRQ27	IRQ26	IRQ25	IRQ24	IRQ23	IRQ22	IRQ21	IRQ20
Type	W1C	W1C	W1C	W1C	W1C	W1C	W1C	W1C	W1C	W1C	W1C	W1C	W1C	W1C	W1C	W1C

MediaTek Confidential Release for Cenon WCX

This document contains information that is proprietary to MediaTek Inc.

Unauthorized reproduction or disclosure of this information in whole or in part is strictly prohibited.

This register is used to clear bits in IRQ Mask Register. When writing to this register, the data bits that are HIGH cause the corresponding bits in IRQ Mask Register to be cleared. Data bits that are LOW have no effect on the corresponding bits in IRQ Mask Register.

IRQ0-3F Clear corresponding bits in IRQ Mask Register.

- **0** No effect
- **1** Disable the corresponding MASK bit

0x8101_0090 IRQ Mask SET Register (low) — IRQ_MASK_SETL

Bit	31	30	29	28	27	26	25	24	23	22	21	20	19	18	17	16
Name	IRQ1F	IRQ1E	IRQ1D	IRQ1C	IRQ1B	IRQ1A	IRQ19	IRQ18	IRQ17	IRQ16	IRQ15	IRQ14	IRQ13	IRQ12	IRQ11	IRQ10
Type	W1S	W1S	W1S	W1S	W1S	W1S	W1S	W1S	W1S	W1S	W1S	W1S	W1S	W1S	W1S	W1S
Bit	15	14	13	12	11	10	9	8	7	6	5	4	3	2	1	0
Name	IRQF	IRQE	IRQD	IRQC	IRQB	IRQA	IRQ9	IRQ8	IRQ7	IRQ6	IRQ5	IRQ4	IRQ3	IRQ2	IRQ1	IRQ0
Type	W1S	W1S	W1S	W1S	W1S	W1S	W1S	W1S	W1S	W1S	W1S	W1S	W1S	W1S	W1S	W1S

0x8101_0094 IRQ Mask SET Register (high) — IRQ_MASK_SETH

Bit	31	30	29	28	27	26	25	24	23	22	21	20	19	18	17	16
Name	IRQ3F	IRQ3E	IRQ3D	IRQ3C	IRQ3B	IRQ3A	IRQ39	IRQ38	IRQ37	IRQ36	IRQ35	IRQ34	IRQ33	IRQ32	IRQ31	IRQ30
Type	W1S	W1S	W1S	W1S	W1S	W1S	W1S	W1S	W1S	W1S	W1S	W1S	W1S	W1S	W1S	W1S
Bit	15	14	13	12	11	10	9	8	7	6	5	4	3	2	1	0
Name	IRQ2F	IRQ2E	IRQ2D	IRQ2C	IRQ2B	IRQ2A	IRQ29	IRQ28	IRQ27	IRQ26	IRQ25	IRQ24	IRQ23	IRQ22	IRQ21	IRQ20
Type	W1S	W1S	W1S	W1S	W1S	W1S	W1S	W1S	W1S	W1S	W1S	W1S	W1S	W1S	W1S	W1S

This register is used to set bits in the IRQ Mask Register. When writing to this register, the data bits that are HIGH cause the corresponding bits in IRQ Mask Register to be set. Data bits that are LOW have no effect on the corresponding bits in IRQ Mask Register.

IRQ0-3F Set corresponding bits in IRQ Mask Register.

- **0** No effect
- **1** Enable corresponding MASK bit

0x8101_00a0 IRQ End of Interrupt Register (low) — IRQ_EOIL

Bit	31	30	29	28	27	26	25	24	23	22	21	20	19	18	17	16
Name	IRQ1F	IRQ1E	IRQ1D	IRQ1C	IRQ1B	IRQ1A	IRQ19	IRQ18	IRQ17	IRQ16	IRQ15	IRQ14	IRQ13	IRQ12	IRQ11	IRQ10

MediaTek Confidential Release for Cenon WCX

This document contains information that is proprietary to MediaTek Inc.

Unauthorized reproduction or disclosure of this information in whole or in part is strictly prohibited.

Type	WO	WO	WO	WO	WO	WO	WO	WO	WO	WO	WO	WO	WO	WO	WO	WO
Reset	0	0	0	0	0	0	0	0	0	0	0	0	0	0	0	0
Bit	15	14	13	12	11	10	9	8	7	6	5	4	3	2	1	0
Name	IRQF	IRQE	IRQD	IRQC	IRQB	IRQA	IRQ9	IRQ8	IRQ7	IRQ6	IRQ5	IRQ4	IRQ3	IRQ2	IRQ1	IRQ0
Type	WO	WO	WO	WO	WO	WO	WO	WO	WO	WO	WO	WO	WO	WO	WO	WO
Reset	0	0	0	0	0	0	0	0	0	0	0	0	0	0	0	0

0x8101_00a4 IRQ End of Interrupt Register (high) IRQ_EOIH

Bit	31	30	29	28	27	26	25	24	23	22	21	20	19	18	17	16
Name	IRQ3F	IRQ3E	IRQ3D	IRQ3C	IRQ3B	IRQ3A	IRQ39	IRQ38	IRQ37	IRQ36	IRQ35	IRQ34	IRQ33	IRQ32	IRQ31	IRQ30
Type	WO	WO	WO	WO	WO	WO	WO	WO	WO	WO	WO	WO	WO	WO	WO	WO
Reset	0	0	0	0	0	0	0	0	0	0	0	0	0	0	0	0
Bit	15	14	13	12	11	10	9	8	7	6	5	4	3	2	1	0
Name	IRQ2F	IRQ2E	IRQ2D	IRQ2C	IRQ2B	IRQ2A	IRQ29	IRQ28	IRQ27	IRQ26	IRQ25	IRQ24	IRQ23	IRQ22	IRQ21	IRQ20
Type	WO	WO	WO	WO	WO	WO	WO	WO	WO	WO	WO	WO	WO	WO	WO	WO
Reset	0	0	0	0	0	0	0	0	0	0	0	0	0	0	0	0

This register provides a mean for software to relinquish and to refresh the interrupt controller. Writing a 1 to a specific bit position results in an End of Interrupt command issued internally to the corresponding interrupt line.

IRQ0-3F End of Interrupt command for the associated interrupt line.

- **0** No service is currently in progress or pending
- **1** Interrupt request is in-service

0x8101_00b0 IRQ Sensitive Register (low) IRQ_SENSL

Bit	31	30	29	28	27	26	25	24	23	22	21	20	19	18	17	16
Name	IRQ1F	IRQ1E	IRQ1D	IRQ1C	IRQ1B	IRQ1A	IRQ19	IRQ18	IRQ17	IRQ16	IRQ15	IRQ14	IRQ13	IRQ12	IRQ11	IRQ10
Type	R/W	R/W	R/W	R/W	R/W	R/W	R/W	R/W	R/W	R/W	R/W	R/W	R/W	R/W	R/W	R/W
Reset	0	0	0	0	0	0	0	0	0	0	0	0	0	0	0	0
Bit	15	14	13	12	11	10	9	8	7	6	5	4	3	2	1	0
Name	IRQF	IRQE	IRQD	IRQC	IRQB	IRQA	IRQ9	IRQ8	IRQ7	IRQ6	IRQ5	IRQ4	IRQ3	IRQ2	IRQ1	IRQ0
Type	R/W	R/W	R/W	R/W	R/W	R/W	R/W	R/W	R/W	R/W	R/W	R/W	R/W	R/W	R/W	R/W
Reset	0	0	0	0	0	0	0	0	0	0	0	0	0	0	0	0

0x8101_00b4 IRQ Sensitive Register (high) IRQ_SENSH

Bit	31	30	29	28	27	26	25	24	23	22	21	20	19	18	17	16
Name	IRQ3F	IRQ3E	IRQ3D	IRQ3C	IRQ3B	IRQ3A	IRQ39	IRQ38	IRQ37	IRQ36	IRQ35	IRQ34	IRQ33	IRQ32	IRQ31	IRQ30
Type	R/W	R/W	R/W	R/W	R/W	R/W	R/W	R/W	R/W	R/W	R/W	R/W	R/W	R/W	R/W	R/W
Reset	0	0	0	0	0	0	0	0	0	0	0	0	0	0	0	0
Bit	15	14	13	12	11	10	9	8	7	6	5	4	3	2	1	0

MediaTek Confidential Release for Cenon WCX

This document contains information that is proprietary to MediaTek Inc.

Unauthorized reproduction or disclosure of this information in whole or in part is strictly prohibited.

Name	IRQ2F	IRQ2E	IRQ2D	IRQ2C	IRQ2B	IRQ2A	IRQ29	IRQ28	IRQ27	IRQ26	IRQ25	IRQ24	IRQ23	IRQ22	IRQ21	IRQ20
Type	R/W	R/W	R/W	R/W	R/W	R/W	R/W	R/W	R/W	R/W	R/W	R/W	R/W	R/W	R/W	R/W
Reset	0	0	0	0	0	0	0	0	0	0	0	0	0	0	0	0

All interrupt lines of IRQ Controller, IRQ0~IRQ3F can be programmed as either edge or level sensitive. By default, all the interrupt lines are edge sensitive and should be active LOW. Once a interrupt line is programmed as edge sensitive, an interrupt request is triggered only at the falling edge of interrupt line, and the next interrupt is not accepted until the EOI command is given. However, level sensitive interrupts trigger is according to the signal level of the interrupt line. Once the interrupt line become from HIGH to LOW, an interrupt request is triggered, and another interrupt request is triggered if the signal level remain LOW after an EOI command. Note that in edge sensitive mode, even if the signal level remains LOW after EOI command, another interrupt request is not triggered. That is because edge sensitive interrupt is only triggered at the falling edge.

IRQ0-3F Sensitivity type of the associated Interrupt Source

- **0** Edge sensitivity with active LOW
- **1** Level sensitivity with active LOW

0x8101_00c0 IRQ Software Interrupt Register (low) IRQ_SOFTL

Bit	31	30	29	28	27	26	25	24	23	22	21	20	19	18	17	16
Name	INT_SRC1F	INT_SRC1E	INT_SRC1D	INT_SRC1C	INT_SRC1B	INT_SRC1A	INT_SRC19	INT_SRC18	INT_SRC17	INT_SRC16	INT_SRC15	INT_SRC14	INT_SRC13	INT_SRC12	INT_SRC11	INT_SRC10
Type	R/W	R/W	R/W	R/W	R/W	R/W	R/W	R/W	R/W	R/W	R/W	R/W	R/W	R/W	R/W	R/W
Reset	0	0	0	0	0	0	0	0	0	0	0	0	0	0	0	0
Bit	15	14	13	12	11	10	9	8	7	6	5	4	3	2	1	0
Name	INT_SRCF	INT_SRCE	INT_SRCD	INT_SRCC	INT_SRCB	INT_SRCA	INT_SRC9	INT_SRC8	INT_SRC7	INT_SRC6	INT_SRC5	INT_SRC4	INT_SRC3	INT_SRC2	INT_SRC1	INT_SRC0
Type	R/W	R/W	R/W	R/W	R/W	R/W	R/W	R/W	R/W	R/W	R/W	R/W	R/W	R/W	R/W	R/W
Reset	0	0	0	0	0	0	0	0	0	0	0	0	0	0	0	0

0x8101_00c4 IRQ Software Interrupt Register (high) IRQ_SOFTH

Bit	31	30	29	28	27	26	25	24	23	22	21	20	19	18	17	16
Name	INT_SRC3F	INT_SRC3E	INT_SRC3D	INT_SRC3C	INT_SRC3B	INT_SRC3A	INT_SRC39	INT_SRC38	INT_SRC37	INT_SRC36	INT_SRC35	INT_SRC34	INT_SRC33	INT_SRC32	INT_SRC31	INT_SRC30
Type	R/W	R/W	R/W	R/W	R/W	R/W	R/W	R/W	R/W	R/W	R/W	R/W	R/W	R/W	R/W	R/W
Reset	0	0	0	0	0	0	0	0	0	0	0	0	0	0	0	0
Bit	15	14	13	12	11	10	9	8	7	6	5	4	3	2	1	0
Name	INT_SRC2F	INT_SRC2E	INT_SRC2D	INT_SRC2C	INT_SRC2B	INT_SRC2A	INT_SRC29	INT_SRC28	INT_SRC27	INT_SRC26	INT_SRC25	INT_SRC24	INT_SRC23	INT_SRC22	INT_SRC21	INT_SRC20
Type	R/W	R/W	R/W	R/W	R/W	R/W	R/W	R/W	R/W	R/W	R/W	R/W	R/W	R/W	R/W	R/W
Reset	0	0	0	0	0	0	0	0	0	0	0	0	0	0	0	0

MediaTek Confidential Release for Cenon WCX

This document contains information that is proprietary to MediaTek Inc.

Unauthorized reproduction or disclosure of this information in whole or in part is strictly prohibited.

Setting "1" to the specific bit position generates a software interrupt for corresponding interrupt line before interrupt input multiplex. This register is used for debug purpose.

INT_SRC0-3F Software Interrupt

0x8101_00d0 FIQ Control Register FIQ_CON

Bit	31	30	29	28	27	26	25	24	23	22	21	20	19	18	17	16
Name																
Type																
Reset																
Bit	15	14	13	12	11	10	9	8	7	6	5	4	3	2	1	0
Name															SENS	MASK
Type															R/W	R/W
Reset															0	1

This register provides a means for software program to control the FIQ controller.

MASK Mask control for the FIQ Interrupt Source

- **0** Interrupt is enabled
- **1** Interrupt is disabled

SENS Sensitivity type of the FIQ Interrupt Source

- **0** Edge sensitivity with active LOW
- **1** Level sensitivity with active LOW

0x8101_00d4 FIQ End of Interrupt Register FIQ_EOI

Bit	31	30	29	28	27	26	25	24	23	22	21	20	19	18	17	16
Name																
Type																
Reset																
Bit	15	14	13	12	11	10	9	8	7	6	5	4	3	2	1	0
Name																EOI
Type																WO
Reset																0

This register provides a means for software to relinquish and to refresh the FIQ controller. Writing a '1' to the specific bit position results in an End of Interrupt command issued internally to the corresponding interrupt line.

EOI End of Interrupt command

0x8101_00d8 Binary Coded Value of IRQ_STATUS IRQ_STA2

Bit	31	30	29	28	27	26	25	24	23	22	21	20	19	18	17	16
Name																
Type																

MediaTek Confidential Release for Cenon WCX

This document contains information that is proprietary to MediaTek Inc.

Unauthorized reproduction or disclosure of this information in whole or in part is strictly prohibited.

Reset																
Bit	15	14	13	12	11	10	9	8	7	6	5	4	3	2	1	0
Name								NOIRQ	STA							
Type								RO	RO							
Reset								0	0							

This Register is a binary coded version of IRQ_STA. It is used by the software program to poll which interrupt line has generated the IRQ interrupt request in a much easier way. Any read to it has the same result as reading IRQ_STA. The IRQ_STA2 is also read-only; write access has no effect on the content. Note that IRQ_STA2 should be coupled with IRQ_EOI2 while using it.

STA Binary coded value of IRQ_STA

NOIRQ Indicating if there is an IRQ or not. If there is no IRQ, this bit is HIGH, and the value of STA is 0_0000b.

0x8101_00dc Binary Coded Value of IRQ_EOI IRQ_EOI2

Bit	31	30	29	28	27	26	25	24	23	22	21	20	19	18	17	16
Name																
Type																
Reset																
Bit	15	14	13	12	11	10	9	8	7	6	5	4	3	2	1	0
Name											EOI					
Type											WO					
Reset											0					

This register is a binary coded version of IRQ_EOI. It provides an easier way for software program to relinquish and to refresh the interrupt controller. Writing a specific code results in an End of Interrupt command issued internally to the corresponding interrupt line. Note that IRQ_EOI2 should be coupled with IRQ_STA2 while using it.

EOI Binary coded value of IRQ_EOI

0x8101_0100 EINT Interrupt Status Register EINT_STA

Bit	31	30	29	28	27	26	25	24	23	22	21	20	19	18	17	16
Name																
Type																
Reset																
Bit	15	14	13	12	11	10	9	8	7	6	5	4	3	2	1	0
Name			EINT13	EINT12	EINT11	EINT10	EINT9	EINT8	EINT7	EINT6	EINT5	EINT4	EINT3	EINT2	EINT1	EINT0
Type			RO	RO	RO	RO	RO	RO	RO	RO	RO	RO	RO	RO	RO	RO
Reset			0	0	0	0	0	0	0	0	0	0	0	0	0	0

This register keeps up with current status of which EINT Source generated the interrupt request. If EINT sources are set to edge sensitive, EINT_IRQ is de-asserted while the corresponding EINT_INTACK is programmed by 1.

MediaTek Confidential Release for Cenon WCX

This document contains information that is proprietary to MediaTek Inc.

Unauthorized reproduction or disclosure of this information in whole or in part is strictly prohibited.

MediaTek Confidential Release for Cenon WCX

EINT0-EINT13 Interrupt Status

- **0** No interrupt request is generated
- **1** Interrupt request is pending

0x8101_0104 EINT Interrupt Mask Register — EINT_MASK

Bit	31	30	29	28	27	26	25	24	23	22	21	20	19	18	17	16
Name																
Type																
Reset																
Bit	15	14	13	12	11	10	9	8	7	6	5	4	3	2	1	0
Name			EINT13	EINT12	EINT11	EINT10	EINT9	EINT8	EINT7	EINT6	EINT5	EINT4	EINT3	EINT2	EINT1	EINT0
Type			R/W	R/W	R/W	R/W	R/W	R/W	R/W	R/W	R/W	R/W	R/W	R/W	R/W	R/W
Reset			1	1	1	1	1	1	1	1	1	1	1	1	1	1

This register controls whether or not EINT Source is allowed to generate an interrupt request. Setting a "1" to the specific bit position prohibits the external interrupt line from becoming active.

EINT0-EINT13 Interrupt Mask

- **0** Interrupt request is enabled.
- **1** Interrupt request is disabled.

0x8101_0108 EINT Interrupt Mask Clear Register — EINT_MASK_CLR

Bit	31	30	29	28	27	26	25	24	23	22	21	20	19	18	17	16
Name																
Type																
Bit	15	14	13	12	11	10	9	8	7	6	5	4	3	2	1	0
Name			EINT13	EINT12	EINT11	EINT10	EINT9	EINT8	EINT7	EINT6	EINT5	EINT4	EINT3	EINT2	EINT1	EINT0
Type			W1C	W1C	W1C	W1C	W1C	W1C	W1C	W1C	W1C	W1C	W1C	W1C	W1C	W1C

This register is used to clear individual mask bits. Only the bits set to 1 are in effect, and interrupt masks for which the mask bit is set are cleared (set to 0). Otherwise the interrupt mask bit retains its original value.

EINT0-EINT13 Disable mask for the associated external interrupt source

- **0** No effect.
- **1** Disable the corresponding MASK bit.

0x8101_010C EINT Interrupt Mask Set Register — EINT_MASK_SET

Bit	31	30	29	28	27	26	25	24	23	22	21	20	19	18	17	16

This document contains information that is proprietary to MediaTek Inc.

Unauthorized reproduction or disclosure of this information in whole or in part is strictly prohibited.

Name																
Type																
Bit	15	14	13	12	11	10	9	8	7	6	5	4	3	2	1	0
Name			EINT13	EINT12	EINT11	EINT10	EINT9	EINT8	EINT7	EINT6	EINT5	EINT4	EINT3	EINT2	EINT1	EINT0
Type			W1S	W1S	W1S	W1S	W1S	W1S	W1S	W1S	W1S	W1S	W1S	W1S	W1S	W1S

This register is used to set individual mask bits. Only the bits set to 1 are in effect, and interrupt masks for which the mask bit is set are set to 1. Otherwise the interrupt mask bit retains its original value.

EINT0-EINT13 Disable mask for the associated external interrupt source.

- **0** No effect.
- **1** Enable corresponding MASK bit.

0x8101_0110 EINT Interrupt Acknowledge Register EINT_INTACK

Bit	31	30	29	28	27	26	25	24	23	22	21	20	19	18	17	16
Name																
Type																
Reset																
Bit	15	14	13	12	11	10	9	8	7	6	5	4	3	2	1	0
Name			EINT13	EINT12	EINT11	EINT10	EINT9	EINT8	EINT7	EINT6	EINT5	EINT4	EINT3	EINT2	EINT1	EINT0
Type			WO	WO	WO	WO	WO	WO	WO	WO	WO	WO	WO	WO	WO	WO
Reset			0	0	0	0	0	0	0	0	0	0	0	0	0	0

Writing "1" to the specific bit position acknowledges the interrupt request correspondingly to the external interrupt line source.

EINT0-EINT13 Interrupt acknowledgement

- **0** No effect.
- **1** Interrupt Request is acknowledged.

0x8101_0114 EINT Sensitive Register EINT_SENS

Bit	31	30	29	28	27	26	25	24	23	22	21	20	19	18	17	16
Name																
Type																
Reset																
Bit	15	14	13	12	11	10	9	8	7	6	5	4	3	2	1	0
Name			EINT13	EINT12	EINT11	EINT10	EINT9	EINT8	EINT7	EINT6	EINT5	EINT4	EINT3	EINT2	EINT1	EINT0
Type			R/W	R/W	R/W	R/W	R/W	R/W	R/W	R/W	R/W	R/W	R/W	R/W	R/W	R/W
Reset			1	1	1	1	1	1	1	1	1	1	1	1	1	1

Sensitivity type of external interrupt source.

MediaTek Confidential Release for Cenon WCX

This document contains information that is proprietary to MediaTek Inc.

Unauthorized reproduction or disclosure of this information in whole or in part is strictly prohibited.

EINT0-EINT13 Sensitive type of the associated external interrupt source

- **0** Edge sensitivity.
- **1** Level sensitivity.

0x8101_0118 EINT Software Interrupt Register — EINT_SOFT

Bit	31	30	29	28	27	26	25	24	23	22	21	20	19	18	17	16
Name																
Type																
Reset																
Bit	15	14	13	12	11	10	9	8	7	6	5	4	3	2	1	0
Name			EINT13	EINT12	EINT11	EINT10	EINT9	EINT8	EINT7	EINT6	EINT5	EINT4	EINT3	EINT2	EINT1	EINT0
Type			R/W	R/W	R/W	R/W	R/W	R/W	R/W	R/W	R/W	R/W	R/W	R/W	R/W	R/W
Reset			0	0	0	0	0	0	0	0	0	0	0	0	0	0

Setting "1" to the specific bit position generates a software interrupt for corresponding interrupt line before mask. This register is used for debug purpose.

EINT0-EINT13 Software Interrupt

0x8101_0120+n*0x10 EINTn De-bounce Control Register — EINTn_CON

Bit	31	30	29	28	27	26	25	24	23	22	21	20	19	18	17	16
Name																
Type																
Reset																
Bit	15	14	13	12	11	10	9	8	7	6	5	4	3	2	1	0
Name	EN	PRESCALER			POL	CNT										
Type	R/W	R/W			R/W	R/W										
Reset	0	0			0	0										

These registers control the de-bounce logic for external interrupt sources in order to minimize the possibility of false activations.

When the external interrupt sources is used to resume the system clock from the sleep mode, the De-bounce control circuit must be enabled.

Note that n is from 0 to 13

CNT De-bounce duration in terms of numbers of 32768Hz clock cycles. The cycle length is determined by PRESCALER

POL Activation type of the EINT source

- **0** Negative polarity

MediaTek Confidential Release for Cenon WCX

This document contains information that is proprietary to MediaTek Inc.

Unauthorized reproduction or disclosure of this information in whole or in part is strictly prohibited.

1 Positive polarity

PRESCALER Determine the clock cycle period for debounce count.

000 32768Hz, max: 0.0625sec
001 16384Hz
010 8192Hz
011 4096Hz
100 2048Hz, max: 1sec
101 1024Hz
110 512Hz
111 256Hz, max: 8secs

EN De-bounce control circuit

0 Disable
1 Enable

If you have to change the debounce setting of some EINT. Please follow the steps:

1. mask the EINT which you want to change the debounce setting
2. disable debounce (EN=0)
3. delay at least 5 32K cycles
4. Enable the debounce (EN=1) and change the debounce setting
5. unmask the EINT

MediaTek Confidential Release for Cenon WCX

This document contains information that is proprietary to MediaTek Inc.

Unauthorized reproduction or disclosure of this information in whole or in part is strictly prohibited.

4 Microcontroller Peripherals

Microcontroller (MCU) Peripherals are devices that are under direct control of the Microcontroller. Most of the devices are attached to the Advanced Peripheral Bus (APB) of the MCU subsystem, and serve as APB slaves. Each MCU peripheral must be accessed as a memory-mapped I/O device; that is, the MCU or the DMA bus master reads from or writes to the specific peripheral by issuing memory-addressed transactions.

4.1 Pulse-Width Modulation Outputs

4.1.1 General Description

Three generic pulse-width modulators are implemented to generate pulse sequences with programmable frequency and duty cycle for LCD backlight or charging purpose. The duration of the PWM output signal is LOW as long as the internal counter value is greater than or equal to the threshold value. The waveform is shown in **Figure 29**.

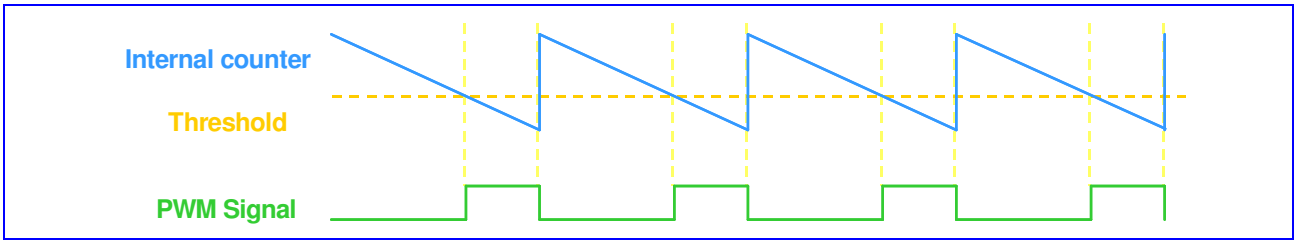

Figure 29 PWM waveform

The frequency and volume of PWM output signal are determined by these registers: PWM_COUNT, PWM_THRES, PWM_CON. The POWERDOWN (pdn_pwm) signal is applied to power-down the PWM module. When PWM is deactivated (POWERDOWN=1), the output is in LOW state.

The output PWM frequency is determined by:

$$\frac{CLK}{CLOCK_DIV \times (PWM_COUNT + 1)} \quad \text{CLK} = 13000000 \text{ when CLKSEL} = 0, CLK = 32000 \, when CLKSEL = 1$$

CLOCK_DIV = 1, when CLK[1:0] = 00b

CLOCK_DIV = 2, when CLK[1:0] = 01b

CLOCK_DIV = 4, when CLK[1:0] = 10b

CLOCK_DIV = 8, when CLK[1:0] = 11b

MediaTek Confidential Release for Cenon WCX

This document contains information that is proprietary to MediaTek Inc.

Unauthorized reproduction or disclosure of this information in whole or in part is strictly prohibited.

The output PWM duty cycle is determined by: $\frac{PWM_THRES}{PWM_COUNT+1}$

Note that PWM_THRES should be less than the PWM_COUNT: if this condition is not satisfied, the output pulse of the PWM is always HIGH.

4.1.2 Register Definitions

0x81080000h PWM1 Control register PWM1_CON

Bit	15	14	13	12	11	10	9	8	7	6	5	4	3	2	1	0
Name														CLKSEL	CLK [1:0]	
Type														R/W	R/W	
Reset														0	0	

CLK Select PWM1 clock prescaler scale.

- **00** CLK Hz
- **01** CLK/2 Hz
- **10** CLK/4 Hz
- **11** CLK/8 Hz

Note: When PWM1 module is disabled, its output should be kept in the LOW state.

CLKSEL Select PWM1 clock

- **0** CLK=13M Hz
- **1** CLK=32K Hz

0x81080004h PWM1 max counter value register PWM1_COUNT

Bit	15	14	13	12	11	10	9	8	7	6	5	4	3	2	1	0
Name				PWM1_COUNT [12:0]												
Type				R/W												
Reset				1FFFh												

PWM1_COUNT PWM1 max counter value. This value is the initial value for the internal counter. Regardless of the operation mode, if PWM1_COUNT is written while the internal counter is counting backwards, the new initial value does not take effect until the internal counter counts down to zero, i.e. a complete period.

0x81080008h PWM1 Threshold Value register PWM1_THRES

Bit	15	14	13	12	11	10	9	8	7	6	5	4	3	2	1	0
Name				PWM1_THRES [12:0]												
Type				R/W												

MediaTek Confidential Release for Cenon WCX

This document contains information that is proprietary to MediaTek Inc.

Unauthorized reproduction or disclosure of this information in whole or in part is strictly prohibited.

Reset				0

PWM1_THRES Threshold value. When the internal counter value is greater than or equal to PWM1_THRES, the PWM1 output signal is 0; when the internal counter is less than PWM1_THRES, the PWM1 output signal is 1.

0x8108000Ch PWM2 Control register PWM2_CON

Bit	15	14	13	12	11	10	9	8	7	6	5	4	3	2	1	0
Name														CLKSEL		CLK [1:0]
Type														R/W		R/W
Reset														0		0

CLK Select PWM2 clock prescaler scale.

- **00** CLK Hz
- **01** CLK/2 Hz
- **10** CLK/4 Hz
- **11** CLK/8 Hz

Note: When PWM2 module is disabled, its output should be kept in the LOW state.

CLKSEL Select PWM2 clock

- **0** CLK=13M Hz
- **1** CLK=32K Hz

0x81080010h PWM2 max counter value register PWM2_COUNT

Bit	15	14	13	12	11	10	9	8	7	6	5	4	3	2	1	0
Name				PWM2_COUNT [12:0]												
Type				R/W												
Reset				1FFFh												

PWM2_COUNT PWM2 max counter value. This value is the initial value for the internal counter. Regardless of the operation mode, if PWM2_COUNT is written while the internal counter is counting backwards, the new initial value does not take effect until the internal counter counts down to zero, i.e. a complete period.

0x81080014h PWM2 Threshold Value register PWM2_THRES

Bit	15	14	13	12	11	10	9	8	7	6	5	4	3	2	1	0
Name				PWM2_THRES [12:0]												
Type				R/W												
Reset				0												

MediaTek Confidential Release for Cenon WCX

This document contains information that is proprietary to MediaTek Inc.

Unauthorized reproduction or disclosure of this information in whole or in part is strictly prohibited.

PWM2_THRES Threshold value. When the internal counter value is greater than or equal to PWM2_THRES, the PWM2 output signal is 0; when the internal counter is less than PWM2_THRES, the PWM2 output signal is 1.

0x81080018h PWM3 Control register PWM3_CON

Bit	15	14	13	12	11	10	9	8	7	6	5	4	3	2	1	0
Name														CLKSEL	CLK [1:0]	
Type														R/W	R/W	
Reset														0	0	

CLK Select PWM3 clock prescaler scale.

- **02** CLK Hz
- **03** CLK/2 Hz
- **10** CLK/4 Hz
- **11** CLK/8 Hz

Note: When PWM3 module is disabled, its output should be kept in the LOW state.

CLKSEL Select PWM3 clock

- **0** CLK=13M Hz
- **1** CLK=32K Hz

0x8108001Ch PWM3 max counter value register PWM3_COUNT

Bit	15	14	13	12	11	10	9	8	7	6	5	4	3	2	1	0
Name				PWM3_COUNT [12:0]												
Type				R/W												
Reset				1FFFh												

PWM3_COUNT PWM3 max counter value. This value is the initial value for the internal counter. Regardless of the operation mode, if PWM3_COUNT is written while the internal counter is counting backwards, the new initial value does not take effect until the internal counter counts down to zero, i.e. a complete period.

0x81080020h PWM3 Threshold Value register PWM3_THRES

Bit	15	14	13	12	11	10	9	8	7	6	5	4	3	2	1	0
Name				PWM3_THRES [12:0]												
Type				R/W												
Reset				0												

MediaTek Confidential Release for Cenon WCX

This document contains information that is proprietary to MediaTek Inc.

Unauthorized reproduction or disclosure of this information in whole or in part is strictly prohibited.

PWM3_THRES Threshold value. When the internal counter value is greater than or equal to PWM3_THRES, the PWM3 output signal is 0; when the internal counter is less than PWM3_THRES, the PWM3 output signal is 1.

Figure 30 shows the PWM waveform with the indicated register values.

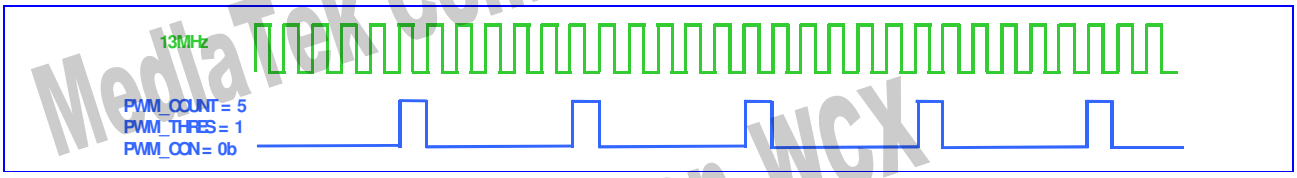

Figure 30 PWM waveform with register values

4.2 SIM Interface

The MT6252 contains two dedicated smart card interfaces to allow the MCU to access the two SIM cards. Each interface can operate via 5 terminals. As shown is the Figure 31, SIMVCC, SIMSEL, SIMRST, SIMCLK and SIMDATA are for one SIM interface, while SIM2VCC, SIM2SEL, SIM2RST, SIM2CLK and SIM2DATA are for the other one.

MediaTek Confidential Release for Cenon WCX
MediaTek Confidential Release for Cenon WCX

This document contains information that is proprietary to MediaTek Inc.

Unauthorized reproduction or disclosure of this information in whole or in part is strictly prohibited.

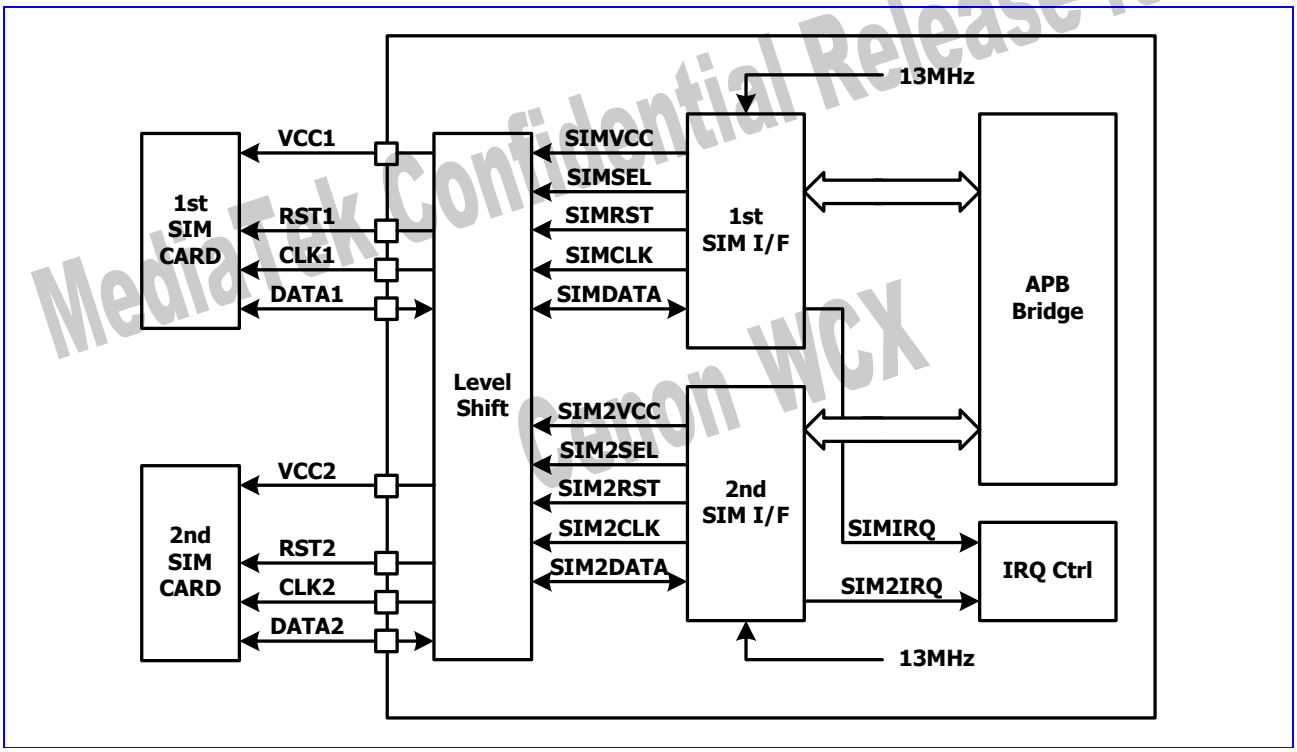

Figure 31 **SIM Interface Block Diagram**

The functions of the two SIM interfaces are identical; therefore, only first SIM interface will be described in this document. The SIMVCC is used to control the external voltage supply to the SIM card and SIMSEL determines the regulated smart card supply voltage. SIMRST is used as the SIM card reset signal. Besides, SIMDATA and SIMCLK are used for data exchange purpose.

Basically, the SIM interface acts as a half duplex asynchronous communication port and its data format is composed of ten consecutive bits: a start bit in state Low, eight information bits, and a tenth bit used for parity checking. The data format can be divided into two modes as follows:

Direct Convention Mode (ODD=SDIR=SINV=0)

SB D0 D1 D2 D3 D4 D5 D6 D7 PB

SB: Start Bit (in state Low)

Dx: Data Byte (LSB is first and logic level ONE is in state High)

PB: Even Parity Check Bit

MediaTek Confidential Release for Cenon WCX

This document contains information that is proprietary to MediaTek Inc.

Unauthorized reproduction or disclosure of this information in whole or in part is strictly prohibited.

Inverse Convention Mode (ODD=SDIR=SINV=1)

SB N7 N6 N5 N4 N3 N2 N1 N0 PB

SB: Start Bit (in state Low)

***Nx*:** Data Byte (MSB is first and logic level ONE is in state Low)

PB: Odd Parity Check Bit

If the receiver gets a wrong parity bit, it will respond by pulling the SIMDATA Low to inform the transmitter and the transmitter will retransmit the character.

When the receiver is a SIM Card, the error response starts 0.5 bits after the PB and it may last for 1~2 bit periods.

When the receiver is the SIM interface, the error response starts 0.5 bits after the PB and lasts for 1.5 bit period.

When the SIM interface is the transmitter, it will take totally 14 bits guard period whether the error response appears. If the receiver shows the error response, the SIM interface will retransmit the previous character again else it will transmit the next character.

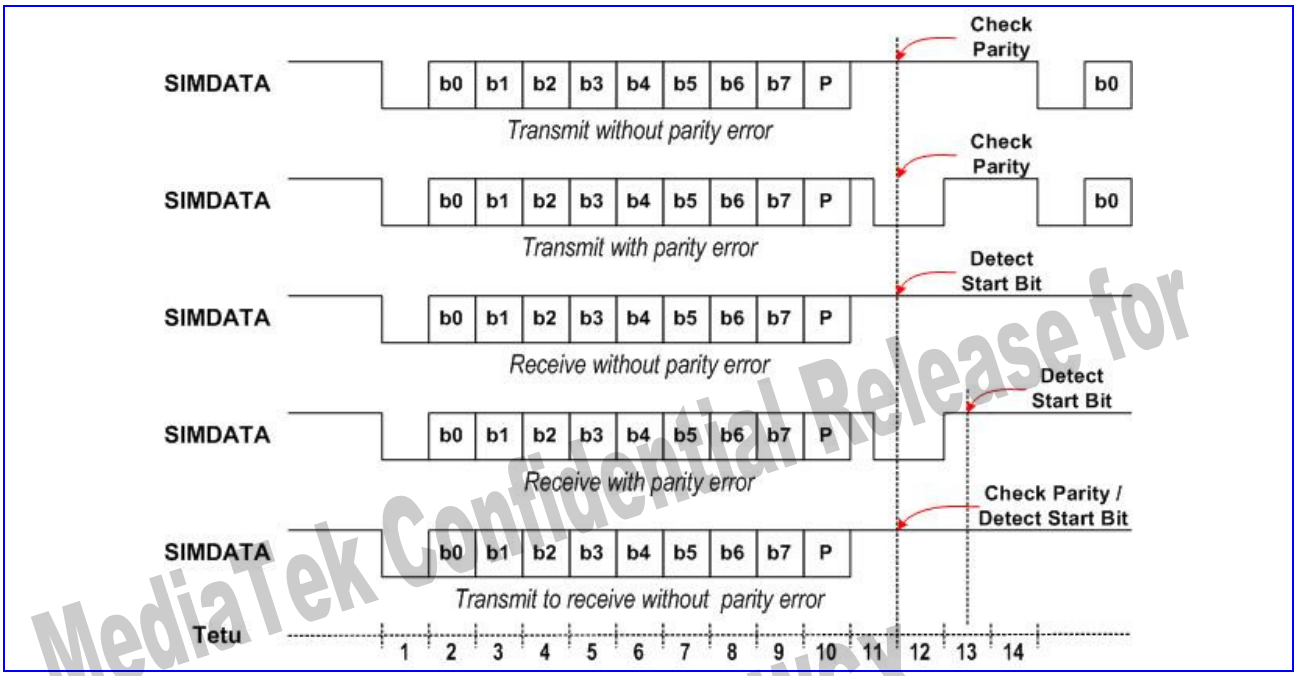

Figure 32 **SIM Interface Timing Diagram**

MediaTek Confidential Release for Cenon WCX

This document contains information that is proprietary to MediaTek Inc.

Unauthorized reproduction or disclosure of this information in whole or in part is strictly prohibited.

4.2.1 Register Definitions

For MCU to control two SIM card interface, all registers are duplicated to two copies but with different base address. In the following, n = "1" is for 1st SIM card interface, while n=2 is for 2nd SIM card interface. For example, address SIM1+0000h is mapped to SIM1_SIM_CTRL register, while address SIM2+0000h is mapped to SIM2_SIM_CTRL register.

4.2.1.1 Register Overview

MCU Register Address (hex)	Acronym	Discription
1st SIM card Interface		
SIM1+0000h	SIM1_SIM_CTRL	Control register
SIM1+0004h	SIM1_SIM_CONF	Configuration register
SIM1+0008h	SIM1_SIM_BRR	Baud rate register
SIM1+0010h	SIM1_SIM_IRQEN	Interrupt enable register
SIM1+0014h	SIM1_SIM_STS	Status register
SIM1+0020h	SIM1_SIM_RETRY	Retry limit register
SIM1+0024h	SIM1_SIM_TIDE	FIFO tide mark register
SIM1+0030h	SIM1_SIM_DATA	TX/RX data register
SIM1+0034h	SIM1_SIM_COUNT	FIFO count register
SIM1+0040h	SIM1_SIM_ATIME	Activation time register
SIM1+0044h	SIM1_SIM_DTIME	Deactivation time register
SIM1+0048h	SIM1_SIM_TOUT	Character to character waiting time register
SIM1+004Ch	SIM1_SIM_GTIME	Block to block guard time register
SIM1+0050h	SIM1_SIM_ETIME	Block to error signal time register
SIM1+0054h	SIM1_SIM_EXT_TIME	Extend data I/O state switch time register
SIM1+0060h	SIM1_SIM_INS	Command header register : INS

MediaTek Confidential Release for Cenon WCX

This document contains information that is proprietary to MediaTek Inc.

Unauthorized reproduction or disclosure of this information in whole or in part is strictly prohibited.

SIM1+0064h	SIM1_SIM_IMP3	Command header register : P3
SIM1+0068h	SIM1_SIM_SW1	Procedure byte register : SW1
SIM1+006Ch	SIM1_SIM_SW2	Procedure byte register : SW2
SIM1+0070h	SIM1_SIM_ATRSTA	ATR state register
SIM1+0074h	SIM1_SIM_STATUS	Protocol state register
SIM1+0080h	SIM1_SIM_DMADATA	TX/RX data register for DMA
2nd SIM card Interface		
SIM2+0000h	SIM2_SIM_CTRL	Control register
SIM2+0004h	SIM2_SIM_CONF	Configuration register
SIM2+0008h	SIM2_SIM_BRR	Baud rate register
SIM2+0010h	SIM2_SIM_IRQEN	Interrupt enable register
SIM2+0014h	SIM2_SIM_STS	Status register
SIM2+0020h	SIM2_SIM_RETRY	Retry limit register
SIM2+0024h	SIM2_SIM_TIDE	FIFO tide mark register
SIM2+0030h	SIM2_SIM_DATA	TX/RX data register
SIM2+0034h	SIM2_SIM_COUNT	FIFO count register
SIM2+0040h	SIM2_SIM_ATIME	Activation time register
SIM2+0044h	SIM2_SIM_DTIME	Deactivation time register
SIM2+0048h	SIM2_SIM_TOUT	Character to character waiting time register
SIM2+004Ch	SIM2_SIM_GTIME	Block to block guard time register
SIM2+0050h	SIM2_SIM_ETIME	Block to error signal time register
SIM2+0054h	SIM2_SIM_EXT_TIME	Extend data I/O state switch time register
SIM2+0060h	SIM2_SIM_INS	Command header register : INS
SIM2+0064h	SIM2_SIM_IMP3	Command header register : P3

MediaTek Confidential Release for Cenon WCX

This document contains information that is proprietary to MediaTek Inc.

Unauthorized reproduction or disclosure of this information in whole or in part is strictly prohibited.

SIM2+0068h	SIM2_SIM_SW1	Procedure byte register : SW1
SIM2+006Ch	SIM2_SIM_SW2	Procedure byte register : SW2
SIM2+0070h	SIM2_SIM_ATRSTA	ATR state register
SIM2+0074h	SIM2_SIM_STATUS	Protocol state register
SIM2+0080h	SIM2_SIM_DMADATA	TX/RX data register for DMA

4.2.1.2 Register Description

SIMn+0000h SIM module control register SIMN_SIM_CTRL

Bit	15	14	13	12	11	10	9	8	7	6	5	4	3	2	1	0
Name														WRST	CSTOP	SIMON
Type														W	R/W	R/W
Reset														0	0	0

SIMON SIM card power-up/power-down control

0 An 1-to-0 change will start the card deactivation sequence

1 A 0-to-1 change will start the card activation sequence

CSTOP Enable clock stop mode. Together with CPOL in SIM_CONF register, it determines the polarity of the SIMCLK in this mode.

0 Enable the SIMCLK output.

1 Disable the SIMCLK output

WRST SIM card warm reset control

SIMn+0004h SIM module configuration register SIMN_SIM_CON

Bit	15	14	13	12	11	10	9	8	7	6	5	4	3	2	1	0
Name						HFEN	T0EN	T1EN	TOUT	SIMSEL	ODD	SDIR	SINV	CPOL	TXACK	RXACK
Type						R/W	R/W	R/W	R/W	R/W	R/W	R/W	R/W	R/W	R/W	R/W
Reset						0	0	0	0	0	0	0	0	0	0	0

RXACK SIM card reception error handshake control

0 Disable character receipt handshaking

1 Enable character receipt handshaking

TXACK SIM card transmission error handshake control

0 Disable character transmission handshaking

MediaTek Confidential Release for Cenon WCX

This document contains information that is proprietary to MediaTek Inc.

Unauthorized reproduction or disclosure of this information in whole or in part is strictly prohibited.

MediaTek Confidential Release for Cenon WCX

1 Enable character transmission handshaking

CPOL SIMCLK polarity control in clock stop mode

0 Make SIMCLK stop in LOW level

1 Make SIMCLK stop in HIGH level

SINV Data invert mode

0 Not invert the transmitted and received data, data logic ONE is in high state

1 Invert the transmitted and received data, data logic ONE is in low state

SDIR Data Transfer Direction

0 LSB is transmitted and received first

1 MSB is transmitted and received first

ODD Select odd or even parity

0 Even parity

1 Odd parity

SIMSEL SIM card supply voltage select

0 SIMSEL pin is set to LOW level, 1.8V

1 SIMSEL pin is set to HIGH level, 3V

TOUT SIM work waiting time counter control

0 Disable Time-Out counter

1 Enable Time-Out counter

T1EN T=1 protocol controller control

0 Disable T=1 protocol controller

1 Enable T=1 protocol controller

T0EN T=0 protocol controller control

0 Disable T=0 protocol controller

1 Enable T=0 protocol controller

HFEN Hardware flow control

0 Disable hardware flow control

1 Enable hardware flow control

SIMn +0008h SIM Baud Rate Register SIMN_SIM_BRR

Bit	15	14	13	12	11	10	9	8	7	6	5	4	3	2	1	0
Name						ETU[8:0]									SIMCLK[1:0]	
Type						R/W									R/W	
Reset						372d									01	

SIMCLK Set SIMCLK frequency

00 Reserved

This document contains information that is proprietary to MediaTek Inc.

Unauthorized reproduction or disclosure of this information in whole or in part is strictly prohibited.

01 13/4 MHz
10 13/8 MHz
11 13/12 MHz

ETU Determines the duration of elementary time unit in unit of SIMCLK

SIMn +0010h SIM interrupt enable register — SIMN_SIM_IRQEN

Bit	15	14	13	12	11	10	9	8	7	6	5	4	3	2	1	0
Name						EDCERR	T1END	RXERR	T0END	SIMOFF	ATRERR	TXERR	TOUT	OVRUN	RXTIDE	TXTIDE
Type						R/W	R/W	R/W	R/W	R/W	R/W	R/W	R/W	R/W	R/W	R/W
Reset						0	0	0	0	0	0	0	0	0	0	0

For all these bits

0 Interrupt is disabled
1 Interrupt is enabled

SIMn +0014h SIM module status register — SIMN_SIM_STS

Bit	15	14	13	12	11	10	9	8	7	6	5	4	3	2	1	0
Name						EDCERR	T1END	RXERR	T0END	SIMOFF	ATRERR	TXERR	TOUT	OVRUN	RXTIDE	TXTIDE
Type						R/C	R/C	R/C	R/C	R/C	R/C	R/C	R/C	R/C	R	R
Reset						—	—	—	—	—	—	—	—	—	—	—

TXTIDE The interrupt occurs when number of transmitted data in the FIFO is less than transmitted tide.
RXTIDE The interrupt occurs when number of received data in the FIFO is larger than received tide.
OVRUN Receive FIFO overflow interrupt occurred
TOUT Between characters timeout interrupt occurred
TXERR Character transmission error interrupt occurred
ATRERR ATR start time-out interrupt occurred
SIMOFF Card deactivation complete interrupt occurred
T0END Data Transfer handled by T=0 Controller completed interrupt occurred
RXERR Character reception error interrupt occurred
T1END Data Transfer handled by T=1 Controller completed interrupt occurred
EDCERR T=1 Controller CRC error occurred

SIMn +0020h SIM retry limit register — SIMN_SIM_RETRY

Bit	15	14	13	12	11	10	9	8	7	6	5	4	3	2	1	0
Name						TXRETRY								RXRETRY		
Type						R/W								R/W		
Reset						3h								3h		

MediaTek Confidential Release for Cenon WCX

This document contains information that is proprietary to MediaTek Inc.

Unauthorized reproduction or disclosure of this information in whole or in part is strictly prohibited.

RXRETRY Specify the maximum numbers of receive retries that are allowed when parity error has occurred.
TXRETRY Specify the maximum numbers of transmit retries that are allowed when parity error has occurred.

SIMn +0024h SIM FIFO tide mark register SIMN_SIM_TIDE

Bit	15	14	13	12	11	10	9	8	7	6	5	4	3	2	1	0
Name					TXTIDE[3:0]								RXTIDE[3:0]			
Type					R/W								R/W			
Reset					0h								0h			

RXTIDE Trigger point of RXTIDE interrupt
TXTIDE Trigger point of TXTIDE interrupt

SIMn +0030h Data register used as Tx/Rx Data Register SIMN_SIM_DATA

Bit	15	14	13	12	11	10	9	8	7	6	5	4	3	2	1	0
Name									DATA[7:0]							
Type									R/W							
Reset									—							

DATA Eight data digits. These correspond to the character being read or written

SIMn +0034h SIM FIFO count register SIMN_SIM_COUNT

Bit	15	14	13	12	11	10	9	8	7	6	5	4	3	2	1	0
Name												COUNT[4:0]				
Type												R/W				
Reset												0h				

COUNT The number of characters in the SIM FIFO when read, and flushes when written.

SIMn +0040h SIM activation time register SIMN_SIM_ATIME

Bit	15	14	13	12	11	10	9	8	7	6	5	4	3	2	1	0
Name	ATIME[15:0]															
Type	R/W															
Reset	AFC7h															

ATIME The register defines the duration, in SIM clock cycles, of the time taken for each of the three stages of the card activation process, from SIMON transits to high to turn on VCC, from turn on VCC to pull DATA high and then from pull DATA high to turn on CLK.

SIMn +0044h SIM deactivation time register SIMN_SIM_DTIME

Bit	15	14	13	12	11	10	9	8	7	6	5	4	3	2	1	0
Name					DTIME[11:0]											

MediaTek Confidential Release for Cenon WCX

This document contains information that is proprietary to MediaTek Inc.

Unauthorized reproduction or disclosure of this information in whole or in part is strictly prohibited.

Type					R/W
Reset					3E7h

DTIME The register defines the duration, in 13MHz clock cycles, of the time taken for each of the three stages of the card deactivation sequence, from pull RST low to turn of CLK, from turn off CLK to pull DATA low, from pull DATA low to turn off VCC.

SIMn +0048h Character to character waiting time register SIMN_SIM_TOUT

Bit	31	30	29	28	27	26	25	24	23	22	21	20	19	18	17	16
Name								WTIME[24:0]								
Type								R/W								
Reset								983h								
Bit	15	14	13	12	11	10	9	8	7	6	5	4	3	2	1	0
Name	WTIME[24:0]															
Type	R/W															
Reset	983h															

WTIME Maximum interval between the leading edge of two consecutive characters in 4 ETU unit

SIMn +004Ch Block to block guard time register SIMN_SIM_GTIME

Bit	15	14	13	12	11	10	9	8	7	6	5	4	3	2	1	0
Name													GTIME			
Type													R/W			
Reset													10d			

GTIME Minimum interval between the leading edge of two consecutive characters sent in opposite directions in ETU unit

SIMn +0050h Block to error signal time register SIMN_SIM_ETIME

Bit	15	14	13	12	11	10	9	8	7	6	5	4	3	2	1	0
Name													ETIME			
Type													R/W			
Reset													15d			

ETIME The register defines the interval, in 1/16 ETU unit, between the end of transmitted parity bit and time to check parity error signal sent from SIM card.

SIMn +0054h Active High Period Control register SIMN_SIM_EXT_TIME

Bit	15	14	13	12	11	10	9	8	7	6	5	4	3	2	1	0
Name													EXT_TIME			
Type													R/W			
Reset													1d			

MediaTek Confidential Release for Cenon WCX

This document contains information that is proprietary to MediaTek Inc.

Unauthorized reproduction or disclosure of this information in whole or in part is strictly prohibited.

EXT_TIME The register defines the interval, in 1/16 ETU unit, between the end of transmitted parity bit and the time to switch SIO to input mode. This value should less than ETIME.

SIMn +0060h SIM command header register: INS — SIMN_SIM_INS

Bit	15	14	13	12	11	10	9	8	7	6	5	4	3	2	1	0
Name								INSD	SIMINS[7:0]							
Type								R/W	R/W							
Reset								0h	0h							

SIMINS This field should be identical to the INS instruction code. When writing to this register, the T=0 controller will be activated and data transfer will be initiated.

INSD [Description for this register field]

0 T=0 controller receives data from the SIM card

1 T=0 controller sends data to the SIM card

SIMn +0064h SIM command header register: P3 — SIMN_SIM_IMP3 (ICC_LEN)

Bit	15	14	13	12	11	10	9	8	7	6	5	4	3	2	1	0
Name								SIMP3 [8]	SIMP3[7:0]							
Type								R	R/W							
Reset								0h	0h							

SIMP3 This field should be identical to the P3 instruction code. It should be written prior to the SIM_INS register. While the data transfer is going on, this field shows the no. of the remaining data to be sent or to be received

SIMn +0068h SIM procedure byte register: SW1 — SIMN_SIM_SW1 (ICC_LEN)

Bit	15	14	13	12	11	10	9	8	7	6	5	4	3	2	1	0
Name									SIMSW1[7:0]							
Type									R							
Reset									0h							

SIMSW1 This field holds the last received procedure byte for debug purpose. When the T0END interrupt occurred, it keeps the SW1 procedure byte.

SIMn +006Ch SIM procedure byte register: SW2 — SIMN_SIM_SW2 (ICC_EDC)

Bit	15	14	13	12	11	10	9	8	7	6	5	4	3	2	1	0
Name									SIMSW2[7:0]							
Type									R							

MediaTek Confidential Release for Canon WCX

This document contains information that is proprietary to MediaTek Inc.

Unauthorized reproduction or disclosure of this information in whole or in part is strictly prohibited.

Reset									0h

SIMSW2 This field holds the SW2 procedure byte

SIMn +0070h SIM ATR state register

SIMN_SIM_ATRSTA

Bit	15	14	13	12	11	10	9	8	7	6	5	4	3	2	1	0
Name								**AL**	**IR**							**OFF**
Type								R	R							R
Reset								0h	0h							1h

Initial, SIM card is turned off. After configuring SIMON of SIMn_SIM_CTRL and ATR procedure, SIMn_SIM_ATRSTA will set IR or AL to 1 to indicate the card's feature.

OFF SIM card's ON/OFF indicator

IR SIM card is IR (internal reset) card

AL SIM card is AL (active low reset) card

SIMn +0074h SIM protocol state register

SIMN_SIM_STATUS

Bit	15	14	13	12	11	10	9	8	7	6	5	4	3	2	1	0
Name											**ALL**	**ONE**				**IDLE**
Type											R	R				R
Reset											0h	0h				1h

Initial, SIM card's T0 or T1 protocol is turned off. When T0 or T1 protocol is turned on, SIMn_SIM_STATUS will transit between ONE or ALL according to SIM card's procedure byte.

IDLE SIM card's T0 or T1 protocol is active or idle.

ONE SIM card will send next byte

ALL SIM card will send all remained bytes.

4.2.2 SIM Card Insertion and Removal

The detection of physical connection to the SIM card and card removal is done by the external interrupt controller or by GPIO.

4.2.3 Card Activation and Deactivation

The card activation and deactivation sequence both are controlled by H/W. The MCU initiates the activation sequence by writing a "1" to bit 0 of the SIM_CTRL register, and then the interface performs the following activation sequence:

- Assert SIMRST LOW

MediaTek Confidential Release for Cenon WCX

This document contains information that is proprietary to MediaTek Inc.

Unauthorized reproduction or disclosure of this information in whole or in part is strictly prohibited.

- Set SIMVCC at HIGH level and SIMDATA in reception mode
- Enable SIMCLK clock
- De-assert SIMRST HIGH (required if it belongs to active low reset SIM card)

The final step in a typical card session is contact deactivation in order that the card is not electrically damaged. The deactivation sequence is initiated by writing a "0" to bit 0 of the SIM_CTRL register, and then the interface performs the following deactivation sequence:

- Assert SIMRST LOW
- Set SCIMCLK at LOW level
- Set SIMDATA at LOW level
- Set SIMVCC at LOW level

4.2.4 Answer to Reset Sequence

After card activation, a reset operation results in an answer from the card consisting of the initial character TS, followed by at most 32 characters. The initial character TS provides a bit synchronization sequence and defines the conventions to interpret data bytes in all subsequent characters.

On reception of the first character, TS, MCU should read this character, establish the respective required convention and reprogram the related registers. These processes should be completed prior to the completion of reception of the next character. And then, the remainder of the ATR sequence is received, read via the SIM_DATA in the selected convention and interpreted by the S/W.

The timing requirement and procedures for ATR sequence are handled by H/W and shall meet the requirement of ISO 7816-3 as shown in Figure 33.

MediaTek Confidential Release for Cenon WCX
MediaTek Confidential Release for Cenon WCX

This document contains information that is proprietary to MediaTek Inc.

Unauthorized reproduction or disclosure of this information in whole or in part is strictly prohibited.

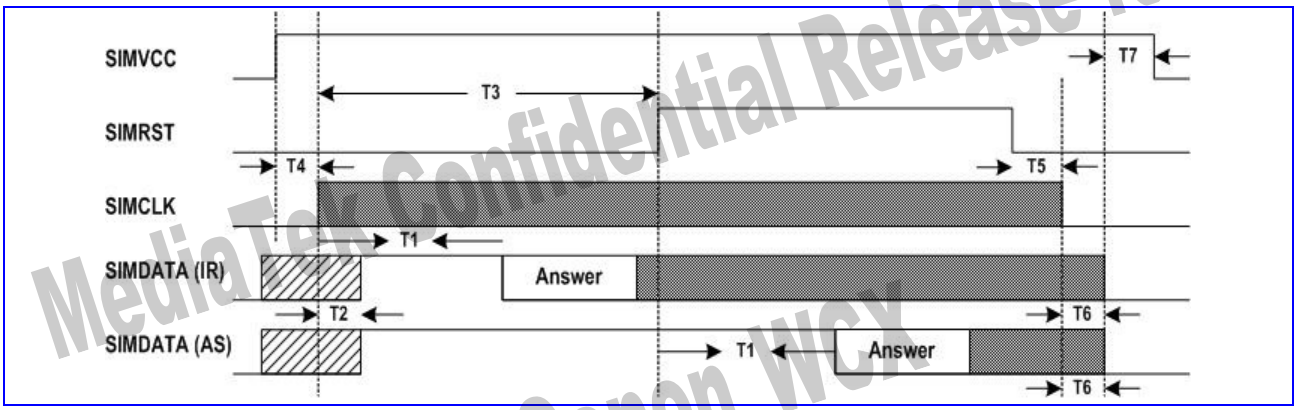

Figure 33 **Answer to Reset Sequence**

Time	Value	Comment
T1	> 400 SIMCLK	SIMCLK start to ATR appear
T2	< 200 SIMCLK	SIMCLK start to SIMDATA in reception mode
T3	> 40000 SIMCLK	SIMCLK start to SIMRST High
T4	—	SIMVCC High to SIMCLK start
T5	—	SIMRST Low to SIMCLK stop
T6	—	SIMCLK stop to SIMDATA Low
T7	—	SIMDATA Low to SIMVCC Low

Table 41 **Answer to Reset Sequence Time-Out Condition**

4.2.5 SIM Data Transfer

Two transfer modes are provided, either in software controlled byte by byte fashion or in a block fashion using T=0 controller and DMA controller. In both modes, the time-out counter could be enabled to monitor the elapsed time between two consecutive bytes.

4.2.5.1 Byte Transfer Mode

This mode is used during ATR and PPS procedure. In this mode, the SIM interface only ensures error free character transmission and reception.

Receiving Character

MediaTek Confidential Release for Cenon WCX

This document contains information that is proprietary to MediaTek Inc.

Unauthorized reproduction or disclosure of this information in whole or in part is strictly prohibited.

Upon detection of the start-bit sent by SIM card, the interface transforms into reception mode and the following bits are shifted into an internal register. If no parity error is detected or character-receive handshaking is disabled, the received-character is written into the SIM FIFO and the SIM_COUNT register is increased by one. Otherwise, the SIMDATA line is held low at 0.5 etu after detecting the parity error for 1.5 etus, and the character is re-received. If a character fails to be received correctly for the RXRETRY times, the receive-handshaking is aborted and the last-received character is written into the SIM FIFO, the SIM_COUNT is increased by one and the RXERR interrupt is generated

When the number of characters held in the receive FIFO exceeds the level defined in the SIM_TIDE register, a RXTIDE interrupt is generated. The number of characters held in the SIM FIFO can be determined by reading the SIM_COUNT register and writing to this register will flush the SIM FIFO.

Sending Character

Characters that are to be sent to the card are first written into the SIM FIFO and then automatically transmitted to the card at timed intervals. If character-transmit handshaking is enabled, the SIMDATA line is sampled at 1 etu after the parity bit. If the card indicates that it did not receive the character correctly, the character is retransmitted a maximum of TXRETRY times before a TXERR interrupt is generated and the transmission is aborted. Otherwise, the succeeding byte in the SIM FIFO is transmitted.

If a character fails to be transmitted and a TXERR interrupt is generated, the interface needs to be reset by flushing the SIM FIFO before any subsequent transmit or receive operation.

When the number of characters held in the SIM FIFO falls below the level defined in the SIM_TIDE register, a TXTIDE interrupt is generated. The number of characters held in the SIM FIFO can be determined by reading the SIM_COUNT register and writing to this register will flush the SIM FIFO.

4.2.5.2 Block Transfer Mode

Basically, the SIM interface is designed to work in conjunction with the T=0 protocol controller and the DMA controller during non-ATR and non-PPS phase, though it is still possible for software to service the data transfer manually like in byte transfer mode if necessary and thus the T=0 protocol should be controlled by software.

The T=0 controller is accessed via four registers representing the instruction header bytes INS and P3, and the procedure bytes SW1 and SW2. These registers are:

SIM_INS, SIM_P3

SIM_SW1, SIM_SW2

MediaTek Confidential Release for Cenon WCX

This document contains information that is proprietary to MediaTek Inc.

Unauthorized reproduction or disclosure of this information in whole or in part is strictly prohibited.

During characters transfer, SIM_P3 holds the number of characters to be sent or to be received and SIM_SW1 holds the last received procedure byte including NULL, ACK, NACK and SW1 for debug purpose.

Data Receive Instruction

Data Receive Instructions receive data from the SIM card. It is instantiated as the following procedure.

```
1. Enable the T=0 protocol controller by setting the T0EN bit to 1 in SIM_CONF register
2. Program the SIM_TIDE register to 0x0000 (TXTIDE = 0, RXTIDE = 0)
3. Program the SIM_IRQEN to 0x019C (Enable RXERR, TXERR, T0END, TOUT and OVRUN interrupts)
4. Write CLA, INS, P1, P2 and P3 into SIM FIFO
5. Program the DMA controller :
   DMAn_MSBSRC and DMAn_LSBSRC : address of SIM_DATA register
   DMAn_MSBDST and DMAn_LSBDST : memory address reserved to store the received characters
   DMAn_COUNT : identical to P3 or 256 (if P3 == 0)
   DMAn_CON : 0x0078
6. Write P3 into SIM_P3 register and then INS into SIM_INS register (Data Transfer is initiated
   now)
7. Enable the Time-out counter by setting the TOUT bit to 1 in SIM_CONF register
8. Start the DMA controller by writing 0x8000 into the DMAn_START register
```

Upon completion of the Data Receive Instruction, T0END interrupt will be generated and then the Time-out counter should be disabled by setting the TOUT bit back to 0 in SIM_CONF register.

If error occurs during data transfer (RXERR, TXERR, OVRUN or TOUT interrupt is generated), the SIM card should be deactivated first and then activated prior subsequent operations.

Data Send Instruction

Data Send Instructions send data to the SIM card. It is instantiated as the following procedure.

```
1. Enable the T=0 protocol controller by setting the T0EN bit to 1 in SIM_CONF register
2. Program the SIM_TIDE register to 0x0100 (TXTIDE = 1, RXTIDE = 0)
3. Program the SIM_IRQEN to 0x019C (Enable RXERR, TXERR, T0END, TOUT and OVRUN interrupts)
4. Write CLA, INS, P1, P2 and P3 into SIM FIFO
5. Program the DMA controller :
   DMAn_MSBSRC and DMAn_LSBSRC : memory address reserved to store the transmitted characters
   DMAn_MSBDST and DMAn_LSBDST : address of SIM_DATA register
   DMAn_COUNT : identical to P3
   DMAn_CON : 0x0074
6. Write P3 into SIM_P3 register and then (0x0100 | INS) into SIM_INS register (Data Transfer
   is initiated now)
7. Enable the Time-out counter by setting the TOUT bit to 1 in SIM_CONF register
8. Start the DMA controller by writing 0x8000 into the DMAn_START register
```

MediaTek Confidential Release for Cenon WCX

This document contains information that is proprietary to MediaTek Inc.

Unauthorized reproduction or disclosure of this information in whole or in part is strictly prohibited.

Upon completion of the Data Send Instruction, T0END interrupt will be generated and then the Time-out counter should be disabled by setting the TOUT bit back to 0 in SIM_CONF register.

If error occurs during data transfer (RXERR, TXERR, OVRUN or TOUT interrupt is generated), the SIM card should be deactivated first and then activated prior subsequent operations.

4.3 Keypad Scanner

4.3.1 General Description

The keypad can be divided into two parts: one is the keypad interface including 8 columns and 8 rows with one dedicated power-key, as shown in **Fig. 1** The other is the key detection block which provides key pressed, key released and de-bounce mechanisms. Each time the key is pressed or released, i.e. something different in the 8 x 8 matrix or power-key, the key detection block senses the change and recognizes if a key has been pressed or released. Whenever the key status changes and is stable, a KEYPAD IRQ is issued. The MCU can then read the key(s) pressed directly in KP_MEM1, KP_MEM2, KP_MEM3, KP_MEM4 and KP_MEM5 registers. To ensure that the key pressed information is not missed, the status register in keypad is not read-cleared by APB read command. The status register can only be changed by the key-pressed detection FSM.

This keypad can detect one or two key-pressed simultaneously with any combination. **Fig. 2** shows one key pressed condition. **Fig. 3** (a) and **Fig. 3** (b) illustrate two keys pressed cases. Since the key press detection depends on the HIGH or LOW level of the external keypad interface, if keys are pressed at the same time and there exists a key that is on the same column and the same row with the other keys, the pressed key cannot be correctly decoded. For example, if there are three key presses: key1 = (x1, y1), key2 = (x2, y2), and key3 = (x1, y2), then both key3 and key4 = (x2, y1) are detected, and therefore they cannot be distinguished correctly. Hence, the keypad can detect only one or two keys pressed simultaneously at any combination. More than two keys pressed simultaneously in a specific pattern retrieve the wrong information.

MediaTek Confidential Release for Cenon WCX
MediaTek Confidential Release for Cenon WCX

This document contains information that is proprietary to MediaTek Inc.

Unauthorized reproduction or disclosure of this information in whole or in part is strictly prohibited.

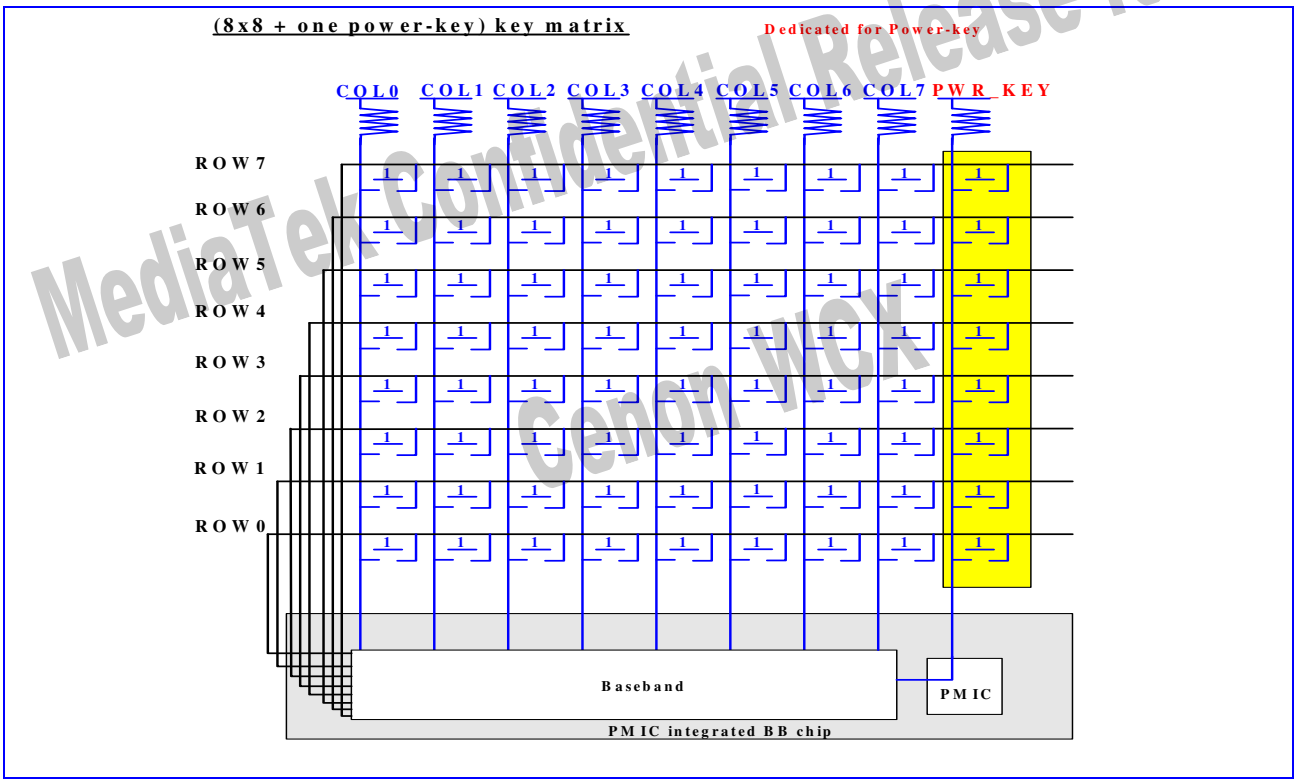

Fig. 1 8x8 matrix with one power-key

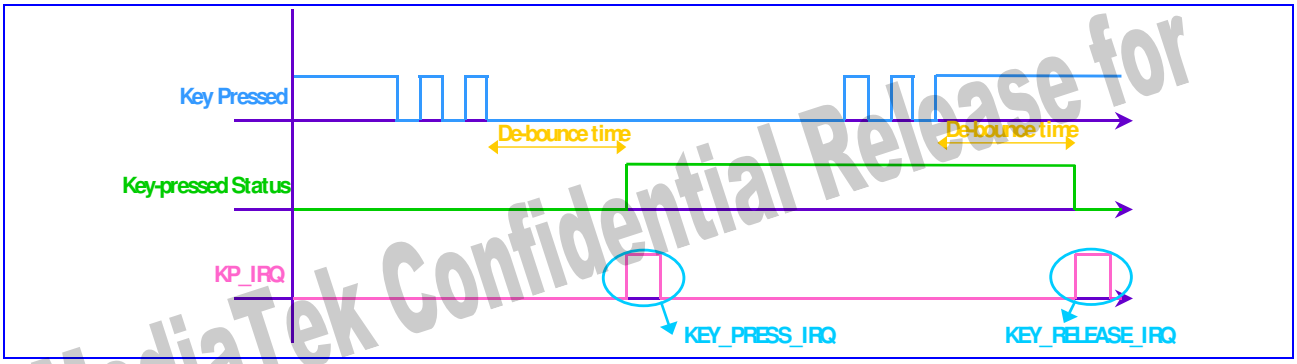

Fig. 2. One key pressed with de-bounce mechanism denoted

MediaTek Confidential Release for Cenon WCX

This document contains information that is proprietary to MediaTek Inc.

Unauthorized reproduction or disclosure of this information in whole or in part is strictly prohibited.

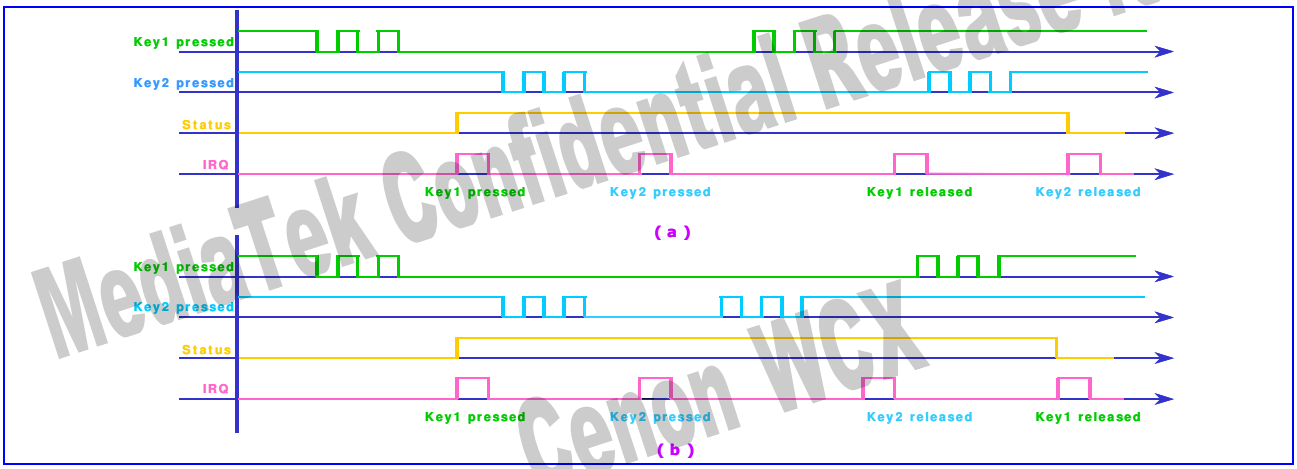

Fig. 3. (a) Two keys pressed, case 1 (b) Two keys pressed, case 2

4.3.2 Register Definitions

KP +0000h Keypad status KP_STA

Bit	15	14	13	12	11	10	9	8	7	6	5	4	3	2	1	0
Name																STA
Type																RO
Reset																0

STA This register indicates the keypad status. The register is not cleared by the read operation.

0 No key pressed

1 Key pressed

KP +0004h Keypad scanning output Register KP_MEM1

Bit	15	14	13	12	11	10	9	8	7	6	5	4	3	2	1	0
Name	KEY 15	KEY 14	KEY 13	KEY 12	KEY 11	KEY 10	KEY 9	KEY 8	KEY 7	KEY 6	KEY 5	KEY 4	KEY 3	KEY 2	KEY 1	KEY 0
Type	RO	RO	RO	RO	RO	RO	RO	RO	RO	RO	RO	RO	RO	RO	RO	RO
Reset	1	1	1	1	1	1	1	1	1	1	1	1	1	1	1	1

The register shows up the key-press status of key0(LSB)~key15. Please reference Table 42.

KP +0008h Keypad scanning output Register KP_MEM2

Bit	15	14	13	12	11	10	9	8	7	6	5	4	3	2	1	0

MediaTek Confidential Release for Cenon WCX

This document contains information that is proprietary to MediaTek Inc.

Unauthorized reproduction or disclosure of this information in whole or in part is strictly prohibited.

Name	KEY 31	KEY 30	KEY 29	KEY 28	KEY 27	KEY 26	KEY 25	KEY 24	KEY 23	KEY 22	KEY 21	KEY 20	KEY 19	KEY 18	KEY 17	KEY 16
Type	RO	RO	RO	RO	RO	RO	RO	RO	RO	RO	RO	RO	RO	RO	RO	RO
Reset	1	1	1	1	1	1	1	1	1	1	1	1	1	1	1	1

The register shows up the key-press status of key16(LSB)~key31. Please reference Table 42.

KP +000Ch Keypad scanning output Register KP_MEM3

Bit	15	14	13	12	11	10	9	8	7	6	5	4	3	2	1	0
Name	KEY 47	KEY 46	KEY 45	KEY 44	KEY 43	KEY 42	KEY 41	KEY 40	KEY 39	KEY 38	KEY 37	KEY 36	KEY 35	KEY 34	KEY 33	KEY 32
Type	RO	RO	RO	RO	RO	RO	RO	RO	RO	RO	RO	RO	RO	RO	RO	RO
Reset	1	1	1	1	1	1	1	1	1	1	1	1	1	1	1	1

The register shows up the key-press status of key32(LSB)~key47. Please reference Table 42.

KP +0010h Keypad scanning output Register KP_MEM4

Bit	15	14	13	12	11	10	9	8	7	6	5	4	3	2	1	0
Name	KEY 63	KEY 62	KEY 61	KEY 60	KEY 59	KEY 58	KEY 57	KEY 56	KEY 55	KEY 54	KEY 53	KEY 52	KEY 51	KEY 50	KEY 49	KEY 48
Type	RO	RO	RO	RO	RO	RO	RO	RO	RO	RO	RO	RO	RO	RO	RO	RO
Reset	1	1	1	1	1	1	1	1	1	1	1	1	1	1	1	1

The register shows up the key-press status of key48(LSB)~key63. Please reference Table 42.

KP +0014h Keypad scanning output Register KP_MEM5

Bit	15	14	13	12	11	10	9	8	7	6	5	4	3	2	1	0
Name									KEY 71	KEY 70	KEY 69	KEY 68	KEY 67	KEY 66	KEY 65	KEY 64
Type									RO	RO	RO	RO	RO	RO	RO	RO
Reset									1	1	1	1	1	1	1	1

The register shows up the key-press status of key64(LSB)~key71. Please reference Table 42.

KP +0010h Keypad scanning output Register KP_MEM4

Bit	15	14	13	12	11	10	9	8	7	6	5	4	3	2	1	0
Name	KEYS [15:0]															
Type	RO															
Reset	16'hFFFF															

The register shows up the key-press status of key48(LSB)~key63. Please reference Table 42.

MediaTek Confidential Release for Cenon WCX

This document contains information that is proprietary to MediaTek Inc.

Unauthorized reproduction or disclosure of this information in whole or in part is strictly prohibited.

KP +0014h Keypad scanning output Register KP_MEM5

Bit	15	14	13	12	11	10	9	8	7	6	5	4	3	2	1	0
Name	KEYS [7:0]															
Type	RO															
Reset	8'hFF															

The register shows up the key-press status of key64(LSB)~key71. Please reference Table 42.

These five registers list the status of 72 keys on the keypad but KEY[8], KEY[17], KEY[26], KEY[35], KEY[44] , KEY[53] , KEY[62] , KEY[71] is dedicated for power key. When the MCU receives the KEYPAD IRQ, both two registers must be read. If any key is pressed, the relative bit is set to 0.

In order to work normally, the corresponding pull-up/down setting must be programmed correctly. If some keys can be use because their COL or ROW is use as GPIO, these corresponding bit will be tie to high.

KEYS Status list of the 72 keys.

KP +00018h De-bounce period setting KP_DEBOUNCE

Bit	15	14	13	12	11	10	9	8	7	6	5	4	3	2	1	0
Name			DEBOUNCE [13:0]													
Type			R/W													
Reset			400h													

This register defines the waiting period before key press or release events are considered stale. If debounce setting is too small, keypad will be too sensitive and detect too many unexpected key-press. The suitable debounce time setting must be adjust for the user's habit.

DEBOUNCE De-bounce time = KP_DEBOUNCE/32 ms.

MediaTek Confidential Release for Cenon WCX

This document contains information that is proprietary to MediaTek Inc.

Unauthorized reproduction or disclosure of this information in whole or in part is strictly prohibited.

	COL0	COL1	COL2	COL3	COL4	COL5	COL6	COL7	PWRKEY
ROW7	63	64	65	66	67	68	69	70	71
ROW6	54	55	56	57	58	59	60	61	62
ROW5	45	46	47	48	49	50	51	52	53
ROW4	36	37	38	39	40	41	42	43	44
ROW3	27	28	29	30	31	32	33	34	35
ROW2	18	19	20	21	22	23	24	25	26
ROW1	9	10	11	12	13	14	15	16	17
ROW0	0	1	2	3	4	5	6	7	8

Table 42 KEY's order number in COL/ROW matrix.

MediaTek Confidential Release for Cenon WCX

MediaTek Confidential Release for Cenon WCX

This document contains information that is proprietary to MediaTek Inc.

Unauthorized reproduction or disclosure of this information in whole or in part is strictly prohibited.

4.4 General Purpose Inputs/Outputs

MT6252 offers 71 general-purpose I/O pins. By setting the control registers, MCU software can control the direction, the output value, and read the input values on these pins. These GPIOs and GPOs are multiplexed with other functionalities to reduce the pin count. In addition, all GPO pins are removed. To facilitate application use, software can configure which clock to send outside the chip. There are 6 clock-out ports embedded in 71 GPIO pins, and each clock-out can be programmed to output appropriate clock source.

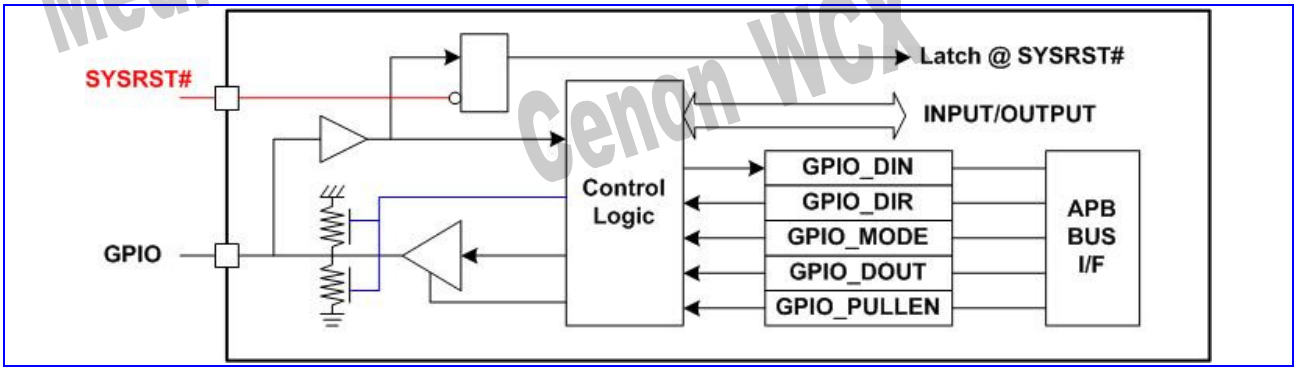

Figure 34 GPIO Block Diagram

GPIOs at RESET

Upon hardware reset (SYSRST#), the digital IOs which are configurated in the mode of aux. function 0 (GPIOs) are all inputs and the following alternative usages of GPIO pins are enabled:

These GPIOs are used to latch the inputs upon reset to memorize the desired configuration to make sure that the system restarts or boots in the right mode.

4.4.1 Register Definitions

0x8002_0000 GPIO direction control register 1 GPIO_DIR1

Bit	15	14	13	12	11	10	9	8	7	6	5	4	3	2	1	0
Name	GPIO 15	GPIO 14	GPIO 13	GPIO 12	GPIO 11	GPIO 10	GPIO 9	GPIO 8	GPIO 7	GPIO 6	GPIO 5	GPIO 4	GPIO 3	GPIO 2	GPIO 1	GPIO 0
Type	R/W	R/W	R/W	R/W	R/W	R/W	R/W	R/W	R/W	R/W	R/W	R/W	R/W	R/W	R/W	R/W
Reset	0	1	1	1	1	1	1	1	0	0	0	0	0	0	0	0

MediaTek Confidential Release for Cenon WCX

This document contains information that is proprietary to MediaTek Inc.

Unauthorized reproduction or disclosure of this information in whole or in part is strictly prohibited.

0x8002_0010 GPIO direction control register 2 GPIO_DIR2

Bit	15	14	13	12	11	10	9	8	7	6	5	4	3	2	1	0
Name	GPIO 31	GPIO 30	GPIO 29	GPIO 28	GPIO 27	GPIO 26	GPIO 25	GPIO 24	GPIO 23	GPIO 22	GPIO 21	PGIO 20	GPIO 19	GPIO 18	GPIO 17	GPIO 16
Type	R/W	R/W	R/W	R/W	R/W	R/W	R/W	R/W	R/W	R/W	R/W	R/W	R/W	R/W	R/W	R/W
Reset	0	0	0	0	0	0	0	0	0	0	0	0	0	0	0	0

0x8002_0020 GPIO direction control register 3 GPIO_DIR3

Bit	15	14	13	12	11	10	9	8	7	6	5	4	3	2	1	0
Name	GPIO 47	GPIO 46	GPIO 45	GPIO 44	GPIO 43	GPIO 42	GPIO 41	GPIO 40	GPIO 39	GPIO 38	GPIO 37	GPIO 36	GPIO 35	GPIO 34	GPIO 33	GPIO 32
Type	R/W	R/W	R/W	R/W	R/W	R/W	R/W	R/W	R/W	R/W	R/W	R/W	R/W	R/W	R/W	R/W
Reset	0	0	1	1	0	0	0	0	0	0	0	0	0	0	0	0

0x8002_0030 GPIO direction control register 4 GPIO_DIR4

Bit	15	14	13	12	11	10	9	8	7	6	5	4	3	2	1	0
Name	GPIO 63	GPIO 62	GPIO 61	GPIO 60	GPIO 59	GPIO 58	GPIO 57	GPIO 56	GPIO 55	GPIO 54	GPIO 53	GPIO 52	GPIO 51	GPIO 50	GPIO 49	GPIO 48
Type	R/W	R/W	R/W	R/W	R/W	R/W	R/W	R/W	R/W	R/W	R/W	R/W	R/W	R/W	R/W	R/W
Reset	0	0	0	0	0	0	0	0	0	0	0	0	0	0	0	0

0x8002_0040 GPIO direction control register 5 GPIO_DIR5

Bit	15	14	13	12	11	10	9	8	7	6	5	4	3	2	1	0
Name	RESERVED									GPIO 70	GPIO 69	GPIO 68	GPIO 67	GPIO 66	GPIO 65	GPIO 64
Type	Reserved									R/W	R/W	R/W	R/W	R/W	R/W	R/W
Reset	Reserved									0	0	0	0	0	0	0

GPIO*n* GPIO direction control

- **0** GPIOs are configured as input
- **1** GPIOs are configured as output

0x8002_0050 GPIO pull-up/pull-down enable register 1 GPIO_PULLE1

Bit	15	14	13	12	11	10	9	8	7	6	5	4	3	2	1	0
Name	GPIO 15	GPIO 14	GPIO 13	GPIO 12	GPIO 11	GPIO 10	GPIO 9	GPIO 8	GPIO 7	GPIO 6	GPIO 5	GPIO 4	GPIO 3	GPIO 2	GPIO 1	GPIO 0
Type	R/W	R/W	R/W	R/W	R/W	R/W	R/W	R/W	R/W	R/W	R/W	R/W	R/W	R/W	R/W	R/W

MediaTek Confidential Release for Cenon WCX

This document contains information that is proprietary to MediaTek Inc.

Unauthorized reproduction or disclosure of this information in whole or in part is strictly prohibited.

Reset	1	0	0	0	0	0	0	0	1	1	1	1	1	1	1	0

0x8002_0060 GPIO pull-up/pull-down enable register 2 GPIO_PULLEN 2

Bit	15	14	13	12	11	10	9	8	7	6	5	4	3	2	1	0
Name	GPIO 31	GPIO 30	GPIO 29	GPIO 28	GPIO 27	GPIO 26	GPIO 25	GPIO 24	GPIO 23	GPIO 22	GPIO 21	PGIO 20	GPIO 19	GPIO 18	GPIO 17	GPIO 16
Type	R/W	R/W	R/W	R/W	R/W	R/W	R/W	R/W	R/W	R/W	R/W	R/W	R/W	R/W	R/W	R/W
Reset	0	0	0	0	1	1	1	1	1	1	1	1	1	1	1	1

0x8002_0070 GPIO pull-up/pull-down enable register 3 GPIO_PULLEN 3

Bit	15	14	13	12	11	10	9	8	7	6	5	4	3	2	1	0
Name	GPIO 47	GPIO 46	GPIO 45	GPIO 44	GPIO 43	GPIO 42	GPIO 41	GPIO 40	GPIO 39	GPIO 38	GPIO 37	GPIO 36	GPIO 35	GPIO 34	GPIO 33	GPIO 32
Type	R/W	R/W	R/W	R/W	R/W	R/W	R/W	R/W	R/W	R/W	R/W	R/W	R/W	R/W	R/W	R/W
Reset	1	1	0	0	1	1	1	1	1	1	1	1	1	1	1	1

0x8002_0080 GPIO pull-up/pull-down enable register 4 GPIO_PULLEN4

Bit	15	14	13	12	11	10	9	8	7	6	5	4	3	2	1	0
Name	GPIO 63	GPIO 62	GPIO 61	GPIO 60	GPIO 59	GPIO 58	GPIO 57	GPIO 56	GPIO 55	GPIO 54	GPIO 53	GPIO 52	GPIO 51	GPIO 50	GPIO 49	GPIO 48
Type	R/W	R/W	R/W	R/W	R/W	R/W	R/W	R/W	R/W	R/W	R/W	R/W	R/W	R/W	R/W	R/W
Reset	1	1	1	1	1	1	1	1	1	1	1	1	1	1	1	1

0x8002_0090 GPIO pull-up/pull-down enable register 5 GPIO_PULLEN5

Bit	15	14	13	12	11	10	9	8	7	6	5	4	3	2	1	0
Name	RESERVED									GPIO 70	GPIO 69	GPIO 68	GPIO 67	GPIO 66	GPIO 65	GPIO 64
Type	Reserved									R/W	R/W	R/W	R/W	R/W	R/W	R/W
Reset	Reserved									1	0	0	0	0	0	0

GPIO*n* GPIO pull up/down enable. **GPIO29, GPIO30, GPIO31, does not have the pull up/down options.**

- **0** GPIOs pull up/down is not enabled
- **1** GPIOs pull up/down is enabled

0x8002_00A0 GPIO data inversion control register 1 GPIO_DINV1

Bit	15	14	13	12	11	10	9	8	7	6	5	4	3	2	1	0

MediaTek Confidential Release for Cenon WCX

This document contains information that is proprietary to MediaTek Inc.

Unauthorized reproduction or disclosure of this information in whole or in part is strictly prohibited.

Name	INV15	INV14	INV13	INV12	INV11	INV10	INV9	INV8	INV7	INV6	INV5	INV4	INV3	INV2	INV1	INV0
Type	R/W	R/W	R/W	R/W	R/W	R/W	R/W	R/W	R/W	R/W	R/W	R/W	R/W	R/W	R/W	R/W
Reset	0	0	0	0	0	0	0	0	0	0	0	0	0	0	0	0

0x8002_00B0 GPIO data inversion control register 2 GPIO_DINV2

Bit	15	14	13	12	11	10	9	8	7	6	5	4	3	2	1	0
Name	INV31	INV30	INV29	INV28	INV27	INV26	INV25	INV24	INV23	INV22	INV21	INV20	INV19	IVN18	INV17	INV16
Type	R/W	R/W	R/W	R/W	R/W	R/W	R/W	R/W	R/W	R/W	R/W	R/W	R/W	R/W	R/W	R/W
Reset	0	0	0	0	0	0	0	0	0	0	0	0	0	0	0	0

0x8002_00C0 GPIO data inversion control register 3 GPIO_DINV3

Bit	15	14	13	12	11	10	9	8	7	6	5	4	3	2	1	0
Name	INV47	INV46	INV45	INV44	INV43	INV42	INV41	INV40	INV39	INV38	INV37	INV36	INV35	INV34	INV33	INV32
Type	R/W	R/W	R/W	R/W	R/W	R/W	R/W	R/W	R/W	R/W	R/W	R/W	R/W	R/W	R/W	R/W
Reset	0	0	0	0	0	0	0	0	0	0	0	0	0	0	0	0

0x8002_00D0 GPIO data inversion control register 4 GPIO_DINV4

Bit	15	14	13	12	11	10	9	8	7	6	5	4	3	2	1	0
Name	INV63	INV62	INV61	INV60	INV59	INV58	INV57	INV56	INV55	INV54	INV53	INV52	INV51	INV50	INV49	INV48
Type	R/W	R/W	R/W	R/W	R/W	R/W	R/W	R/W	R/W	R/W	R/W	R/W	R/W	R/W	R/W	R/W
Reset	0	0	0	0	0	0	0	0	0	0	0	0	0	0	0	0

0x8002_00E0 GPIO data inversion control register 5 GPIO_DINV5

Bit	15	14	13	12	11	10	9	8	7	6	5	4	3	2	1	0
Name	RESERVED									INV 70	INV 69	INV 68	INV 67	INV 66	INV 65	INV 64
Type	Reserved									R/W	R/W	R/W	R/W	R/W	R/W	R/W
Reset	Reserved									0	0	0	0	0	0	0

INVn GPIO inversion control

- **0** GPIOs data inversion disable
- **1** GPIOs data inversion enable

0x8002_00F0 GPIO data output register 1 GPIO_DOUT1

Bit	15	14	13	12	11	10	9	8	7	6	5	4	3	2	1	0
Name	GPIO 15	GPIO 14	GPIO 13	GPIO 12	GPIO 11	GPIO 10	GPIO 9	GPIO 8	GPIO 7	GPIO 6	GPIO 5	GPIO 4	GPIO 3	GPIO 2	GPIO 1	GPIO 0
Type	R/W	R/W	R/W	R/W	R/W	R/W	R/W	R/W	R/W	R/W	R/W	R/W	R/W	R/W	R/W	R/W

MediaTek Confidential Release for Canon WCX

This document contains information that is proprietary to MediaTek Inc.

Unauthorized reproduction or disclosure of this information in whole or in part is strictly prohibited.

Reset	0	0	0	0	0	0	0	0	0	0	0	0	0	0	0	0

0x8002_0100 GPIO data output register 2 GPIO_DOUT2

Bit	15	14	13	12	11	10	9	8	7	6	5	4	3	2	1	0
Name	GPIO 31	GPIO 30	GPIO 29	GPIO 28	GPIO 27	GPIO 26	GPIO 25	GPIO 24	GPIO 23	GPIO 22	GPIO 21	PGIO 20	GPIO 19	GPIO 18	GPIO 17	GPIO 16
Type	R/W	R/W	R/W	R/W	R/W	R/W	R/W	R/W	R/W	R/W	R/W	R/W	R/W	R/W	R/W	R/W
Reset	0	0	0	0	0	0	0	0	0	0	0	0	0	0	0	0

0x8002_0110 GPIO data output register 3 GPIO_DOUT3

Bit	15	14	13	12	11	10	9	8	7	6	5	4	3	2	1	0
Name	GPIO 47	GPIO 46	GPIO 45	GPIO 44	GPIO 43	GPIO 42	GPIO 41	GPIO 40	GPIO 39	GPIO 38	GPIO 37	GPIO 36	GPIO 35	GPIO 34	GPIO 33	GPIO 32
Type	R/W	R/W	R/W	R/W	R/W	R/W	R/W	R/W	R/W	R/W	R/W	R/W	R/W	R/W	R/W	R/W
Reset	0	0	0	0	0	0	0	0	0	0	0	0	0	0	0	0

0x8002_0120 GPIO data output register 4 GPIO_DOUT4

Bit	15	14	13	12	11	10	9	8	7	6	5	4	3	2	1	0
Name	GPIO 63	GPIO 62	GPIO 61	GPIO 60	GPIO 59	GPIO 58	GPIO 57	GPIO 56	GPIO 55	GPIO 54	GPIO 53	GPIO 52	GPIO 51	GPIO 50	GPIO 49	GPIO 48
Type	R/W	R/W	R/W	R/W	R/W	R/W	R/W	R/W	R/W	R/W	R/W	R/W	R/W	R/W	R/W	R/W
Reset	0	0	0	0	0	0	0	0	0	0	0	0	0	0	0	0

0x8002_0130 GPIO data output register 5 GPIO_DOUT5

Bit	15	14	13	12	11	10	9	8	7	6	5	4	3	2	1	0
Name	RESERVED									GPIO 70	GPIO 69	GPIO 68	GPIO 67	GPIO 66	GPIO 65	GPIO 64
Type	Reserved									R/W	R/W	R/W	R/W	R/W	R/W	R/W
Reset	Reserved									0	0	0	0	0	0	0

GPIOn GPIO data output control

- **0** GPIOs data output 0
- **1** GPIOs data output 1

0x8002_0140 GPIO data Input register 1 GPIO_DIN1

Bit	15	14	13	12	11	10	9	8	7	6	5	4	3	2	1	0

MediaTek Confidential Release for Canon WCX

This document contains information that is proprietary to MediaTek Inc.

Unauthorized reproduction or disclosure of this information in whole or in part is strictly prohibited.

Name	GPIO 15	GPIO 14	GPIO 13	GPIO 12	GPIO 11	GPIO 10	GPIO 9	GPIO 8	GPIO 7	GPIO 6	GPIO5	GPIO 4	GPIO 3	GPIO 2	GPIO 1	GPIO 0
Type	RO	RO	RO	RO	RO	RO	RO	RO	RO	RO	RO	RO	RO	RO	RO	RO
Reset	X	X	X	X	X	X	X	X	X	X	X	X	X	X	X	X

0x8002_0150 GPIO data Input register 2 GPIO_DIN2

Bit	15	14	13	12	11	10	9	8	7	6	5	4	3	2	1	0
Name	GPIO 31	GPIO 30	GPIO 29	GPIO 28	GPIO 27	GPIO 26	GPIO 25	GPIO 24	GPIO 23	GPIO 22	GPIO2 1	PGIO 20	GPIO 19	GPIO 18	GPIO 17	GPIO 16
Type	RO	RO	RO	RO	RO	RO	RO	RO	RO	RO	RO	RO	RO	RO	RO	RO
Reset	X	X	X	X	X	X	X	X	X	X	X	X	X	X	X	X

0x8002_0160 GPIO data Input register 3 GPIO_DIN3

Bit	15	14	13	12	11	10	9	8	7	6	5	4	3	2	1	0
Name	GPIO 47	GPIO 46	GPIO 45	GPIO 44	GPIO 43	GPIO 42	GPIO 41	GPIO 40	GPIO 39	GPIO 38	GPIO3 7	GPIO 36	GPIO 35	GPIO 34	GPIO 33	GPIO 32
Type	RO	RO	RO	RO	RO	RO	RO	RO	RO	RO	RO	RO	RO	RO	RO	RO
Reset	X	X	X	X	X	X	X	X	X	X	X	X	X	X	X	X

0x8002_0170 GPIO data input register 4 GPIO_DIN4

Bit	15	14	13	12	11	10	9	8	7	6	5	4	3	2	1	0
Name	GPIO 63	GPIO 62	GPIO 61	GPIO 60	GPIO 59	GPIO 58	GPIO 57	GPIO 56	GPIO 55	GPIO 54	GPIO5 3	GPIO 52	GPIO 51	GPIO 50	GPIO 49	GPIO 48
Type	RO	RO	RO	RO	RO	RO	RO	RO	RO	RO	RO	RO	RO	RO	RO	RO
Reset	X	X	X	X	X	X	X	X	X	X	X	X	X	X	X	X

0x8002_0180 GPIO data input register 5 GPIO_DIN5

Bit	15	14	13	12	11	10	9	8	7	6	5	4	3	2	1	0
Name	RESERVED										GPIO 69	GPIO 68	GPIO 67	GPIO 66	GPIO 65	GPIO 64
Type	Reserved										R/W	R/W	R/W	R/W	R/W	R/W
Reset	Reserved										0	0	0	0	0	0

GPIOn GPIOs data input

MediaTek Confidential Release for Cenon WCX

This document contains information that is proprietary to MediaTek Inc.

Unauthorized reproduction or disclosure of this information in whole or in part is strictly prohibited.

0x8002_0210 GPIO Specific Mode 0 GPIO_SPMODE0

Bit	31	30	29	28	27	26	25	24	23	22	21	20	19	18	17	10
Name	EA15_SPMODE		EA14_SPMODE		EA13_SPMODE		EA12_SPMODE		EA11_SPMODE		EA10_SPMODE		EA9_SPMODE		EA8_SPMODE	
Type	R/W		R/W		R/W		R/W		R/W		R/W		R/W		R/W	
Reset	0		0		0		0		0		0		0		0	
Bit	15	14	13	12	11	10	9	8	7	6	5	4	3	2	1	0
Name	EA7_SPMODE		EA6_SPMODE		EA5_SPMODE		EA4_SPMODE		EA3_SPMODE		EA2_SPMODE		EA1_SPMODE		EA0_SPMODE	
Type	R/W		R/W		R/W		R/W		R/W		R/W		R/W		R/W	
Reset	0		0		0		0		0		0		0		0	

EA0_SPMODE

- **00** EMI EA0
- **01** LPA0
- **10** Reserved
- **11** SEN2LCM_A0

EA1_SPMODE

- **00** EMI EA1
- **01** LRD_B
- **10** Reserved
- **11** Reserved

EA2_SPMODE

- **00** EMI EA2
- **01** LWR_B
- **10** Reserved
- **11** SEN2LCM_WR_B

EA3_SPMODE

- **00** EMI EA3
- **01** NLD0
- **10** LSCK
- **11** CMDAT0

EA4_SPMODE

- **00** EMI EA4
- **01** NLD1
- **10** LSA0
- **11** CMDAT1

EA5_SPMODE

MediaTek Confidential Release for Cenon WCX
MediaTek Confidential Release for Cenon WCX

This document contains information that is proprietary to MediaTek Inc.

Unauthorized reproduction or disclosure of this information in whole or in part is strictly prohibited.

MediaTek Confidential Release for Cenon WCX

00 EMI EA5
01 NLD2
10 LSDA
11 CMDAT2

EA6_SPMODE
00 EMI EA6
01 NLD3
10 LSDI
11 CMDAT3

EA7_SPMODE
00 EMI EA7
01 NLD4
10 Reserved
11 CMDAT4

EA8_SPMODE
00 EMI EA8
01 NLD5
10 Reserved
11 CMDAT5

EA9_SPMODE
00 EMI EA9
01 NLD6
10 Reserved
11 CMDAT6

EA10_SPMODE
00 EMI EA10
01 NLD7
10 Reserved
11 CMDAT7

EA11_SPMODE
00 EMI EA11
01 NLD8
10 Reserved
11 Reserved

EA12_SPMODE
00 EMI EA12

MediaTek Confidential Release for Cenon WCX

This document contains information that is proprietary to MediaTek Inc.

Unauthorized reproduction or disclosure of this information in whole or in part is strictly prohibited.

01 NLD9
10 CMMCLK
11 CMMCLK

EA13_SPMODE

00 EMI EA13
01 NLD10
10 CAM_CSK
11 CMPCLK

EA14_SPMODE

00 EMI EA14
01 NLD11
10 CAM_CSD
11 HSYNC

EA15_SPMODE

00 EMI EA15
01 NLD12
10 CMPDN
11 VSYNC

0x8002_0220 GPIO Specific Mode 1 GPIO_SPMODE1

Bit	31	30	29	28	27	26	25	24	23	22	21	20	19	18	17	16
Name																
Type	R/W		R/W		R/W		R/W		R/W		R/W		R/W		R/W	
Reset	0		0		0		0		0		0		0		0	
Bit	15	14	13	12	11	10	9	8	7	6	5	4	3	2	1	0
Name	UTXD1_SPMODE		URXD1_SPMODE		RESERVED	ED7_SPMODE			RESERVED	ED6_SPMODE			EA24_SPMODE		EA23_SPMODE	
Type	R/W		R/W		R/W	R/W			R/W	R/W			R/W		R/W	
Reset	0		0		0	0			0	0			0		0	

EA23_SPMODE

00 EMI EA23
01 Reserved
10 Reserved
11 LSCE0_B

EA24_SPMODE

00 EMI EA24

MediaTek Confidential Release for Cenon WCX

This document contains information that is proprietary to MediaTek Inc.

Unauthorized reproduction or disclosure of this information in whole or in part is strictly prohibited.

MediaTek Confidential Release for Cenon WCX

01 Reserved
10 Reserved
11 LPCE0_B

ED6_SPMODE

000 EMI ED6
001 JRTCK
010 CMRST
011 LSCE1_B
100 SEN2LCM_CS_B
101 CAM_SDA
110 LPCE1_B
111 Reserved

ED7_SPMODE

000 EMI ED7
001 JRTCK
010 CMPDN
011 LPCE1_B
100 SEN2LCM_CS_B
101 CAM_SCL
110 LSCE1_B
111 Reserved

URXD1_SPMODE

00 URXD1
01 EINT2
10 LSCK
11 Reserved

UTXD1_SPMODE

00 UTXD1
01 EINT3
10 LSDA11 Reserved

GPIO+0300h CLK_OUT0 setting **CLKO_MODE1**

Bit	15	14	13	12	11	10	9	8	7	6	5	4	3	2	1	0
Name													CLKOUT			
Type													R/W			
Reset													0			

MediaTek Confidential Release for Cenon WCX

This document contains information that is proprietary to MediaTek Inc.

Unauthorized reproduction or disclosure of this information in whole or in part is strictly prohibited.

MediaTek Confidential Release for Cenon WCX

CLKOUT select the clock output source

- **0** JRTCK
- **1** f26m_ck
- **2** f13m_ck
- **3** f65m_ck, 6.5MHz
- **4** f32k_ck
- **5** dsp1_ck
- **6** dsp2_ck
- **7** mcu_hclk_ck
- **8** ahb_hclk_ck
- **9** slow_ck
- **A** fmcu_ck, PLL output, 104MHz
- **B** fdsp_ck, PLL output, 104MHz
- **C** fusb_ck, USB PHY clock output, 30MHz
- **D** fgsm_ck, GPLL output, 104MHz
- **E** dsp1_gated_ck
- **F** dsp2_gated_ck

GPIO+0310h CLK_OUT1 setting CLKO_MODE1

Bit	15	14	13	12	11	10	9	8	7	6	5	4	3	2	1	0
Name													CLKOUT			
Type													R/W			
Reset													0			

GPIO+0320h CLK_OUT2 setting CLKO_MODE2

Bit	15	14	13	12	11	10	9	8	7	6	5	4	3	2	1	0
Name													CLKOUT			
Type													R/W			
Reset													0			

GPIO+0330h CLK_OUT3 setting CLKO_MODE3

Bit	15	14	13	12	11	10	9	8	7	6	5	4	3	2	1	0
Name													CLKOUT			

This document contains information that is proprietary to MediaTek Inc.

Unauthorized reproduction or disclosure of this information in whole or in part is strictly prohibited.

Type													R/W			
Reset													0			

GPIO+0340h CLK_OUT4 setting CLKO_MODE4

Bit	15	14	13	12	11	10	9	8	7	6	5	4	3	2	1	0
Name													CLKOUT			
Type													R/W			
Reset													0			

GPIO+0350h CLK_OUT5 setting CLKO_MODE5

Bit	15	14	13	12	11	10	9	8	7	6	5	4	3	2	1	0
Name													CLKOUT			
Type													R/W			
Reset													0			

GPIO+0360h CLK_OUT6 setting CLKO_MODE6

Bit	15	14	13	12	11	10	9	8	7	6	5	4	3	2	1	0
Name													CLKOUT			
Type													R/W			
Reset													0			

GPIO+0360h CLK_OUT7 setting CLKO_MODE7

Bit	15	14	13	12	11	10	9	8	7	6	5	4	3	2	1	0
Name													CLKOUT			
Type													R/W			
Reset													0			

0x8002_0190 GPIO mode control register 1 GPIO_MODE1

Bit	31	30	29	28	27	26	25	24	23	22	21	20	19	18	17	16
Name		GPIO7_M				GPIO6_M				GPIO5_M				GPIO4_M		
Type		R/W				R/W				R/W				R/W		
Reset		0				0				0				0		
Bit	15	14	13	12	11	10	9	8	7	6	5	4	3	2	1	0
Name		GPIO3_M				GPIO2_M				GPIO1_M				GPIO0_M		

MediaTek Confidential Release for Cenon WCX

This document contains information that is proprietary to MediaTek Inc.

Unauthorized reproduction or disclosure of this information in whole or in part is strictly prohibited.

Type		R/W		R/W		R/W		R/W
Reset		0		0		0		2

GPIO0_M GPIO mode selection

- **000** Configured as GPIO function
- **001** PWM1 output
- **010** CLKSQ_SEL
- **011** Reserved
- **100** EMI ED bus 0 monitor
- **101** Serial flash debug output 0
- **110** USB debug output 0
- **111** USB debug output 8

GPIO1_M GPIO mode selection

- **000** Configured as GPIO function
- **001** Key-pad column 6, KCOL6
- **010** External interrupt 4, EINT4
- **011** Clock monitor 0
- **100** EMI ED bus 1 monitor
- **101** Serial flash debug output 3
- **110** USB debug output 1
- **111** USB debug output 9

GPIO2_M GPIO mode selection

- **000** Configured as GPIO function
- **001** Key-pad column 5, KCOL5
- **010** TDMA event validate
- **011** CAM_SDA
- **100** EMI ED bus 2 monitor
- **101** Serial flash debug output 1
- **110** MIXEDSYS_MON_DATA0
- **111** Reserved

GPIO3_M GPIO mode selection

- **000** Configured as GPIO function
- **001** Key-pad column 4, KCOL4

MediaTek Confidential Release for Cenon WCX

This document contains information that is proprietary to MediaTek Inc.

Unauthorized reproduction or disclosure of this information in whole or in part is strictly prohibited.

010 TDMA_BTXEN
011 CAM_SCL
100 EMI ED bus 3 monitor
101 Clock monitor 1
110 Reserved
111 Reserved

GPIO4_M GPIO mode selection
000 Configured as GPIO function
001 Key-pad column 3, KCOL3
010 UART1 CTS
011 BSI clock
100 EMI ED bus 4 monitor
101 Serial flash debug output 2
110 MIXEDSYS_MON_DATA0
111 RF_AUXOUT

GPIO5_M GPIO mode selection
000 Configured as GPIO function
001 Key-pad column 2, KCOL2
010 CTIRQ2
011 host DSP ICE data
100 EMI ED bus 5 monitor
101 URXD3
110 Reserved
111 Reserved

GPIO6_M GPIO mode selection
000 Configured as GPIO function
001 Key-pad column 1, KCOL1
010 CTIRQ1
011 Host DSP ICE clock
100 EMI ED bus 6 monitor
101 EDICK
110 USB debug output 2
111 USB debug output 10

MediaTek Confidential Release for Cenon WCX
MediaTek Confidential Release for Cenon WCX

This document contains information that is proprietary to MediaTek Inc.

Unauthorized reproduction or disclosure of this information in whole or in part is strictly prohibited.

GPIO7_M GPIO mode selection

- **000** Configured as GPIO function
- **001** Key-pad column 0, KCOL0
- **010** DTIRQ
- **011** Host DSP ICE mode-select
- **100** EMI ED bus 7 monitor
- **101** Serial flash debug output 4
- **110** USB debug output 3
- **111** USB debug output 11

MediaTek Confidential Release for Cenon WCX

MediaTek Confidential Release for Cenon WCX

This document contains information that is proprietary to MediaTek Inc.

Unauthorized reproduction or disclosure of this information in whole or in part is strictly prohibited.

0x8002_01A0 GPIO mode control register 2 GPIO_MODE2

Bit	31	30	29	28	27	26	25	24	23	22	21	20	19	18	17	16
Name		GPIO15_M				GPIO14_M				GPIO13_M				GPIO12_M		
Type		R/W				R/W				R/W				R/W		
Reset		0				1				0				0		
Bit	15	14	13	12	11	10	9	8	7	6	5	4	3	2	1	0
Name		GPIO11_M				GPIO10_M				GPIO9_M				GPIO8_M		
Type		R/W				R/W				R/W				R/W		
Reset		0				0				0				0		

GPIO8_M GPIO mode selection

- **000** Configured as GPIO function
- **001** Key-pad row 5, KROW5
- **010** External interrupt 5, EINT5
- **011** Clock monitor 3
- **100** EMI ED bus 8 monitor
- **101** EDI DAT
- **110** MIXEDSYS_MON_DATA1
- **111** Reserved

GPIO9_M GPIO mode selection

- **000** Configured as GPIO function
- **001** Key-pad row 4, KROW4
- **010** TDMA serial data output bit 0
- **011** SRCLKENA | SRECLKENAI
- **100** EMI ED bus 9 monitor
- **101** EDI WS
- **110** Reserved
- **111** Reserved

GPIO10_M GPIO mode selection

- **000** Configured as GPIO function
- **001** Key-pad row 3, KROW3
- **010** UART1 RTS_B
- **011** Reserved
- **100** LSA0
- **101** Serial flash debug output 5

MediaTek Confidential Release for Cenon WCX

This document contains information that is proprietary to MediaTek Inc.

Unauthorized reproduction or disclosure of this information in whole or in part is strictly prohibited.

110 MIXEDSYS_MON_DATA1
111 RF_TEST_EN_DCXO_O

GPIO11_M GPIO mode selection
000 Configured as GPIO function
001 Key-pad row 2, KROW2
010 BTXFS
011 DSP2 ICE data
100 LSCK
101 UTXD3
110 Reserved
111 Reserved

GPIO12_M GPIO mode selection
000 Configured as GPIO function
001 Key-pad row 1, KROW1
010 BRXEN
011 DSP2 ICE clock
100 LSDA
101 Reserved
110 Reserved
111 Reserved

GPIO13_M GPIO mode selection
000 Configured as GPIO function
001 Key-pad row 0, KROW0
010 BRXFS
011 DSP2 IMS
100 LSDI
101 Serial flash debug output 6
110 USB debug output 4
111 USB debug output 12

GPIO14_M GPIO mode selection
000 Configured as GPIO function
001 external memory chip-select 2, ECS2_B

MediaTek Confidential Release for Cenon WCX

This document contains information that is proprietary to MediaTek Inc.

Unauthorized reproduction or disclosure of this information in whole or in part is strictly prohibited.

010 LCD CS0
011 LSCE0_B
100 EMI ECS1_B monitor
101 Reserved
110 SEN2LCM_CS_B
111 Reserved

GPIO15_M GPIO mode selection
000 Configured as GPIO function
001 DAI clock output
010 TDMA serial data output bit 1
011 EDI clock
100 EMI ED[10] monitor
101 Reserved
110 Reserved
111 Reserved

MediaTek Confidential Release for Cenon WCX

MediaTek Confidential Release for Cenon WCX

This document contains information that is proprietary to MediaTek Inc.

Unauthorized reproduction or disclosure of this information in whole or in part is strictly prohibited.

0x8002_01B0 GPIO mode control register 3 GPIO_MODE3

Bit	31	30	29	28	27	26	25	24	23	22	21	20	19	18	17	16
Name		GPIO23_M				GPIO22_M				GPIO21_M				GPIO20_M		
Type		R/W				R/W				R/W				R/W		
Reset		0				0				0				0		
Bit	15	14	13	12	11	10	9	8	7	6	5	4	3	2	1	0
Name		GPIO19_M				GPIO18_M				GPIO17_M				GPIO16_M		
Type		R/W				R/W				R/W				R/W		
Reset		0				0				0				0		

GPIO16_M GPIO mode selection

- **000** Configured as GPIO function
- **001** DAI PCM output
- **010** TDMA_FS
- **011** EDI data
- **100** EMI ED[11] monitor
- **101** Reserved
- **110** Reserved
- **111** Reserved

GPIO17_M GPIO mode selection

- **000** Configured as GPIO function
- **001** DAI PCM input
- **010** Reserved
- **011** Reserved
- **100** EMI ED[12] monitor
- **101** Serial flash debug output 7
- **110** MIXEDSYS_MON_DATA 2
- **111** RF_TEST_DCXODELAY

GPIO18_M GPIO mode selection

- **000** Configured as GPIO function
- **001** DAI reset
- **010** Reserved
- **011** Reserved
- **100** EMI ED[13] monitor
- **101** Serial flash debug output 8

MediaTek Confidential Release for Cenon WCX

This document contains information that is proprietary to MediaTek Inc.

Unauthorized reproduction or disclosure of this information in whole or in part is strictly prohibited.

110 MIXEDSYS_MON_DATA 3
111 RF_TEST_EN_O

GPIO19_M GPIO mode selection
000 Configured as GPIO function
001 DAI sync.
010 TDMA_CK
011 EDI_WS
100 EMI ED[14] monitor
101 Reserved
110 Reserved
111 Reserved

GPIO20_M GPIO mode selection
000 Configured as GPIO function
001 URXD3
010 UART2 flow control, UCTS2_B
011 Reserved
100 EMI EA[18] monitor
101 Serial flash debug output 10
110 USB debug output 5
111 USB debug output 13

GPIO21_M GPIO mode selection
000 Configured as GPIO function
001 UTXD3
010 UART2 flow control, URTS2_B
011 Reserved
100 EMI EA[19] monitor
101 Serial flash debug output 11
110 USB debug output 6
111 USB debug output 14

GPIO22_M GPIO mode selection
000 Configured as GPIO function
001 URXD2

MediaTek Confidential Release for Cenon WCX
MediaTek Confidential Release for Cenon WCX

This document contains information that is proprietary to MediaTek Inc.

Unauthorized reproduction or disclosure of this information in whole or in part is strictly prohibited.

010 UART1 CTS_B
011 CAM_SCL
100 EMI EA[20] monitor
101 Serial flash debug output 12
110 MIXEDSYS_MON_DATA 4
111 DBG_RF_TEST_SCLK_O

GPIO23_M GPIO mode selection
000 Configured as GPIO function
001 UTXD2
010 UART1 RTS_B
011 CAM_SDA
100 EMI EA[21] monitor
101 Clock monitor 2
110 MIXEDSYS_MON_DATA 5
111 DBG_RF_TEST_SDATAI_O

MediaTek Confidential Release for Cenon WCX
MediaTek Confidential Release for Cenon WCX

This document contains information that is proprietary to MediaTek Inc.

Unauthorized reproduction or disclosure of this information in whole or in part is strictly prohibited.

0x8002_01C0 GPIO mode control register 4 GPIO_MODE4

Bit	31	30	29	28	27	26	25	24	23	22	21	20	19	18	17	16
Name		GPIO31_M				GPIO30_M				GPIO29_M				GPIO28_M		
Type		R/W				R/W				R/W				R/W		
Reset		0				0				0				0		
Bit	15	14	13	12	11	10	9	8	7	6	5	4	3	2	1	0
Name		GPIO27_M				GPIO26_M				GPIO25_M				GPIO24_M		
Type		R/W				R/W				R/W				R/W		
Reset		1				1				0				0		

GPIO24_M GPIO mode selection

- **000** Configured as GPIO function
- **001** UART1 flow control, UCTS1_B
- **010** CAM_SCL
- **011** LCD data 13
- **100** EMI EUB_B monitor
- **101** EINT5
- **110** Reserved
- **111** Reserved

GPIO25_M GPIO mode selection

- **000** Configured as GPIO function
- **001** UART1 flow control, URTS1_B
- **010** CAM_SDA
- **011** LCD data 14
- **100** EMI ELB_B monitor
- **101** EINT6
- **110** Reserved
- **111** Reserved

GPIO26_M GPIO mode selection

- **000** Configured as GPIO function
- **001** EINT0
- **010** Reserved
- **011** Clock monitor 4
- **100** Reserved
- **101** Serial flash debug 14

MediaTek Confidential Release for Cenon WCX

This document contains information that is proprietary to MediaTek Inc.

Unauthorized reproduction or disclosure of this information in whole or in part is strictly prohibited.

110 MIXEDSYS_MON_DATA 6
111 DBG_RF_TEST_SDATAO_O

GPIO27_M GPIO mode selection
000 Configured as GPIO function
001 EINT1
010 Reserved
011 Clock monitor 3
100 Reserved
101 Serial flash debug 15
110 MIXEDSYS_MON_DATA 7
111 Reserved

GPIO28_M GPIO mode selection
000 Configured as GPIO function
001 BPI_BUS 4
010 Reserved
011 Reserved
100 EMI EADV_B monitor
101 Reserved
110 Reserved
111 Reserved

GPIO29_M GPIO mode selection
000 Configured as GPIO function
001 SIM2 IO
010 Reserved
011 Reserved
100 Reserved
101 Reserved
110 Reserved
111 Reserved

GPIO30_M GPIO mode selection
000 Configured as GPIO function
001 SIM2 CLK

MediaTek Confidential Release for Cenon WCX
MediaTek Confidential Release for Cenon WCX

This document contains information that is proprietary to MediaTek Inc.

Unauthorized reproduction or disclosure of this information in whole or in part is strictly prohibited.

010 Reserved
011 Reserved
100 Reserved
101 Reserved
110 Reserved
111 Reserved

GPIO31_M GPIO mode selection
000 Configured as GPIO function
001 SIM2 RST
010 Reserved
011 Reserved
100 Reserved
101 Reserved
110 Reserved
111 Reserved

MediaTek Confidential Release for Cenon WCX

MediaTek Confidential Release for Cenon WCX

This document contains information that is proprietary to MediaTek Inc.

Unauthorized reproduction or disclosure of this information in whole or in part is strictly prohibited.

0x8002_01D0 GPIO mode control register 5 GPIO_MODE5

Bit	31	30	29	28	27	26	25	24	23	22	21	20	19	18	17	16
Name		GPIO39_M				GPIO38_M				GPIO37_M				GPIO36_M		
Type		R/W				R/W				R/W				R/W		
Reset		0				0				0				0		
Bit	15	14	13	12	11	10	9	8	7	6	5	4	3	2	1	0
Name		GPIO35_M				GPIO34_M				GPIO33_M				GPIO32_M		
Type		R/W				R/W				R/W				R/W		
Reset		1				0				0				0		

GPIO32_M GPIO mode selection

- **000** Configured as GPIO function
- **001** Reserved
- **010** Reserved
- **011** Reserved
- **100** EMI ED15 monitor
- **101** Serial flash debug output 9
- **110** USB debug output 7
- **111** USB debug output 15

GPIO33_M GPIO mode selection

- **000** Configured as GPIO function
- **001** Clock monitor 2
- **010** Reserved
- **011** LSCE1_B
- **100** EMI EA16 monitor
- **101** Reserved
- **110** Reserved
- **111** Reserved

GPIO34_M GPIO mode selection

- **000** Configured as GPIO function
- **001** Clock monitor 6
- **010** SRCLKENA\SRCLKENAI
- **011** Reserved
- **100** EMI EA17 monitor
- **101** Serial flash debug output 13

MediaTek Confidential Release for Cenon WCX

This document contains information that is proprietary to MediaTek Inc.

Unauthorized reproduction or disclosure of this information in whole or in part is strictly prohibited.

110 Reserved
111 Reserved

GPIO35_M GPIO mode selection
000 Configured as GPIO function
001 SRECLKENAI
010 Reserved
011 Reserved
100 Reserved
101 Reserved
110 Reserved
111 Reserved

GPIO36_M GPIO mode selection
000 Configured as GPIO function
001 MCINS
010 Reserved
011 LCD data 15
100 EMI ERD_B monitor
101 EINT6
110 Reserved
111 Reserved

GPIO37_M GPIO mode selection
000 Configured as GPIO function
001 MSDC clock output
010 Reserved
011 Reserved
100 EMI ECLK monitor
101 Reserved
110 Reserved
111 DBG_RF_TEST_SCLK_I

GPIO38_M GPIO mode selection
000 Configured as GPIO function
001 MSDC data

MediaTek Confidential Release for Cenon WCX
MediaTek Confidential Release for Cenon WCX

This document contains information that is proprietary to MediaTek Inc.

Unauthorized reproduction or disclosure of this information in whole or in part is strictly prohibited.

010 Reserved
011 Reserved
100 EMI EWAIT monitor
101 Reserved
110 Reserved
111 DBG_RF_TEST_EN_I

GPIO39_M GPIO mode selection
000 Configured as GPIO function
001 MSDC command
010 Reserved
011 Reserved
100 EMI EWR_B monitor
101 Reserved
110 Reserved
111 DBG_RF_TEST_SDATA_I

MediaTek Confidential Release for Cenon WCX
MediaTek Confidential Release for Cenon WCX

This document contains information that is proprietary to MediaTek Inc.

Unauthorized reproduction or disclosure of this information in whole or in part is strictly prohibited.

0x8002_01E0 GPIO mode control register 6 GPIO_MODE6

Bit	31	30	29	28	27	26	25	24	23	22	21	20	19	18	17	16
Name		GPIO47_M				GPIO46_M				GPIO45_M				GPIO44_M		
Type		R/W				R/W				R/W				R/W		
Reset		0				4				0				0		
Bit	15	14	13	12	11	10	9	8	7	6	5	4	3	2	1	0
Name		GPIO43_M				GPIO42_M				GPIO41_M				GPIO40_M		
Type		R/W				R/W				R/W				R/W		
Reset		0				0				0				0		

GPIO40_M GPIO mode selection

- **000** Configured as GPIO function
- **001** LCD TE
- **010** Reserved
- **011** Reserved
- **100** Reserved
- **101** Reserved
- **110** Reserved
- **111** Reserved

GPIO41_M GPIO mode selection

- **000** Configured as GPIO function
- **001** LCD reset
- **010** Reserved
- **011** Reserved
- **100** Reserved
- **101** Reserved
- **110** Reserved
- **111** Reserved

GPIO42_M GPIO mode selection

- **000** Configured as GPIO function
- **001** Reserved
- **010** LCD_CS1_B
- **011** LSCE1_B
- **100** Reserved
- **101** Reserved

MediaTek Confidential Release for Cenon WCX
MediaTek Confidential Release for Cenon WCX

This document contains information that is proprietary to MediaTek Inc.

Unauthorized reproduction or disclosure of this information in whole or in part is strictly prohibited.

110 SEN2LCM_CS_B
111 EINT2

GPIO43_M GPIO mode selection
000 Configured as GPIO function
001 Key-pad column 7, KCOL7
010 EINT2
011 Clock monitor 2
100 LSCK
101 JRTCK
110 Reserved
111 Reserved

GPIO44_M GPIO mode selection
000 Configured as GPIO function
001 Key-pad row 6, KROW6
010 Reserved
011 Reserved
100 LSDA
101 Reserved
110 Reserved
111 Reserved

GPIO45_M GPIO mode selection
000 Configured as GPIO function
001 Key-pad row 7, KROW7
010 EINT3
011 Clock monitor 5
100 CAM_SDA
101 Reserved
110 Reserved
111 Reserved

GPIO46_M GPIO mode selection
000 Configured as GPIO function
001 Reserved
010 Reserved

MediaTek Confidential Release for Cenon WCX

This document contains information that is proprietary to MediaTek Inc.

Unauthorized reproduction or disclosure of this information in whole or in part is strictly prohibited.

011 Reserved
100 JRTCK
101 Reserved
110 Reserved
111 Reserved

GPIO47_M GPIO mode selection
000 Configured as GPIO function
001 Camera data bit 0, CMDAT0
010 CAM_CSD
011 Slave DSP task ID 0
100 Reserved
101 Reserved
110 Reserved
111 Reserved

MediaTek Confidential Release for Cenon WCX

MediaTek Confidential Release for Cenon WCX

This document contains information that is proprietary to MediaTek Inc.

Unauthorized reproduction or disclosure of this information in whole or in part is strictly prohibited.

0x8002_01F0 GPIO mode control register 7 GPIO_MODE7

Bit	31	30	29	28	27	26	25	24	23	22	21	20	19	18	17	16
Name		GPIO55_M				GPIO54_M				GPIO53_M				GPIO52_M		
Type		R/W				R/W				R/W				R/W		
Reset		0				0				0				0		
Bit	15	14	13	12	11	10	9	8	7	6	5	4	3	2	1	0
Name		GPIO51_M				GPIO50_M				GPIO49_M				GPIO48_M		
Type		R/W				R/W				R/W				R/W		
Reset		0				0				0				0		

GPIO48_M GPIO mode selection

- **000** Configured as GPIO function
- **001** Camera data bit 1, CMDAT1
- **010** LSDA
- **011** Slave DSP task ID 1
- **100** Reserved
- **101** Reserved
- **110** Reserved
- **111** Reserved

GPIO49_M GPIO mode selection

- **000** Configured as GPIO function
- **001** Camera data bit 2, CMDAT2
- **010** Reserved
- **011** Slave DSP task ID 2
- **100** Reserved
- **101** Reserved
- **110** Reserved
- **111** Reserved

GPIO50_M GPIO mode selection

- **000** Configured as GPIO function
- **001** Camera data bit 3, CMDAT3
- **010** Reserved
- **011** Slave DSP task ID 3
- **100** Reserved
- **101** Reserved

MediaTek Confidential Release for Cenon WCX

This document contains information that is proprietary to MediaTek Inc.

Unauthorized reproduction or disclosure of this information in whole or in part is strictly prohibited.

110 Reserved
111 Reserved

GPIO51_M GPIO mode selection
000 Configured as GPIO function
001 Camera data bit 4, CMDAT4
010 Reserved
011 Slave DSP task ID 4
100 Reserved
101 Reserved
110 Reserved
111 Reserved

GPIO52_M GPIO mode selection
000 Configured as GPIO function
001 Camera data bit 5, CMDAT5
010 Reserved
011 Slave DSP task ID 5
100 Reserved
101 Reserved
110 Reserved
111 Reserved

GPIO53_M GPIO mode selection
000 Configured as GPIO function
001 Camera data bit 6, CMDAT6
010 Reserved
011 Slave DSP task ID 6
100 Reserved
101 Reserved
110 Reserved
111 Reserved

GPIO54_M GPIO mode selection
000 Configured as GPIO function
001 Camera data bit 7, CMDAT7

MediaTek Confidential Release for Cenon WCX
MediaTek Confidential Release for Cenon WCX

This document contains information that is proprietary to MediaTek Inc.

Unauthorized reproduction or disclosure of this information in whole or in part is strictly prohibited.

MediaTek Confidential Release for Cenon WCX

010 Reserved
011 Host DSP task ID 0
100 Reserved
101 Reserved
110 Reserved
111 Reserved

GPIO55_M GPIO mode selection
000 Configured as GPIO function
001 CMHREF
010 Reserved
010 Host DSP task ID 1
100 Reserved
101 Reserved
110 Reserved
111 Reserved

MediaTek Confidential Release for Cenon WCX

This document contains information that is proprietary to MediaTek Inc.

Unauthorized reproduction or disclosure of this information in whole or in part is strictly prohibited.

0x8002_0200 GPIO mode control register 8 GPIO_MODE8

Bit	31	30	29	28	27	26	25	24	23	22	21	20	19	18	17	16
Name		GPIO63_M				GPIO62_M				GPIO61_M				GPIO60_M		
Type		R/W				R/W				R/W				R/W		
Reset		0				0				0				0		
Bit	15	14	13	12	11	10	9	8	7	6	5	4	3	2	1	0
Name		GPIO59_M				GPIO58_M				GPIO57_M				GPIO56_M		
Type		R/W				R/W				R/W				R/W		
Reset		0				0				0				0		

GPIO56_M GPIO mode selection

- **000** Configured as GPIO function
- **001** CMVREF
- **010** Reserved
- **011** Reserved
- **100** Reserved
- **101** Reserved
- **110** Reserved
- **111** Reserved

GPIO57_M GPIO mode selection

- **000** Configured as GPIO function
- **001** CMPDN
- **010** LSCK
- **011** Reserved
- **100** Reserved
- **101** Reserved
- **110** Reserved
- **111** Reserved

GPIO58_M GPIO mode selection

- **000** Configured as GPIO function
- **001** CMMCLK
- **010** Reserved
- **011** Reserved
- **100** Reserved

MediaTek Confidential Release for Cenon WCX
MediaTek Confidential Release for Cenon WCX

This document contains information that is proprietary to MediaTek Inc.

Unauthorized reproduction or disclosure of this information in whole or in part is strictly prohibited.

101 Reserved
110 Reserved
111 Reserved

GPIO59_M GPIO mode selection
000 Configured as GPIO function
001 CMPCLK
010 CAM_CSK
011 Reserved
100 Reserved
101 Reserved
110 Reserved
111 Reserved

GPIO60_M GPIO mode selection
000 Configured as GPIO function
001 CMRST
010 Reserved
011 Reserved
100 Reserved
101 Reserved
110 Reserved
111 Reserved

GPIO61_M GPIO mode selection
000 Configured as GPIO function
001 EDI_CK
010 Reserved
011 BPI_BUS_5
100 Reserved
101 Reserved
110 Reserved
111 Reserved

GPIO62_M GPIO mode selection
000 Configured as GPIO function

MediaTek Confidential Release for Cenon WCX
MediaTek Confidential Release for Cenon WCX

This document contains information that is proprietary to MediaTek Inc.

Unauthorized reproduction or disclosure of this information in whole or in part is strictly prohibited.

001 EDI DAT
010 Reserved
011 BPI_BUS_6
100 Reserved
101 Reserved
110 Reserved
111 Reserved

GPIO63_M GPIO mode selection
000 Configured as GPIO function
001 EDI WS
010 Reserved
011 BPI_BUS_7
100 Reserved
101 Reserved
110 Reserved
111 Reserved

0x8002_0230 GPIO mode control register 9 GPIO_MODE9

Bit	31	30	29	28	27	26	25	24	23	22	21	20	19	18	17	16
Name						GPIO70_M				GPIO69_M				GPIO68_M		
Type						R/W				R/W				R/W		
Reset						0				1				1		
Bit	15	14	13	12	11	10	9	8	7	6	5	4	3	2	1	0
Name		GPIO67_M				GPIO66_M				GPIO65_M				GPIO64_M		
Type		R/W				R/W				R/W				R/W		
Reset		1				1				1				1		

GPIO64_M GPIO mode selection
000 Configured as GPIO function

MediaTek Confidential Release for Cenon WCX

This document contains information that is proprietary to MediaTek Inc.

Unauthorized reproduction or disclosure of this information in whole or in part is strictly prohibited.

MediaTek Confidential Release for Cenon WCX

001 SCK
010 LSCK
011 Clock monitor 2
100 Reserved
101 Reserved
110 Reserved
111 Reserved

GPIO65_M GPIO mode selection
000 Configured as GPIO function
001 SWP
010 LSA0
011 Reserved
100 Reserved
101 Reserved
110 Reserved
111 Reserved

GPIO66_M GPIO mode selection
000 Configured as GPIO function
001 SHOLD
010 LSCE0_B
011 Reserved
100 Reserved
101 Reserved
110 Reserved
111 Reserved

GPIO67_M GPIO mode selection
000 Configured as GPIO function
001 SCS
010 LSCE1_B
011 Reserved
100 Reserved
101 Reserved
110 Reserved

MediaTek Confidential Release for Cenon WCX

This document contains information that is proprietary to MediaTek Inc.

Unauthorized reproduction or disclosure of this information in whole or in part is strictly prohibited.

111 Reserved

GPIO68_M GPIO mode selection
- **000** Configured as GPIO function
- **001** SIN
- **010** LSDI
- **011** EINT3
- **100** Reserved
- **101** Reserved
- **110** Reserved
- **111** Reserved

GPIO69_M GPIO mode selection
- **000** Configured as GPIO function
- **001** SOUT
- **010** LSDA
- **011** Reserved
- **100** Reserved
- **101** Reserved
- **110** Reserved
- **111** Reserved

GPIO70_M GPIO mode selection
- **000** Configured as GPIO function
- **001** Reserved
- **010** EINT4
- **011** Clock monitor 2
- **100** CAM_SCL
- **101** Reserved
- **110** Reserved
- **111** Reserved

0x8002_0240 GPIO Pull Up/Down Select 1 GPIO_PULLSEL1

Bit	15	14	13	12	11	10	9	8	7	6	5	4	3	2	1	0

MediaTek Confidential Release for Cenon WCX
MediaTek Confidential Release for Cenon WCX

This document contains information that is proprietary to MediaTek Inc.

Unauthorized reproduction or disclosure of this information in whole or in part is strictly prohibited.

Name	GPIO 15	GPIO 14	GPIO 13	GPIO 12	GPIO 11	GPIO 10	GPIO 9	GPIO 8	GPIO 7	GPIO 6	GPIO 5	GPIO 4	GPIO 3	GPIO 2	GPIO 1	GPIO 0
Type	R/W	R/W	R/W	R/W	R/W	R/W	R/W	R/W	R/W	R/W	R/W	R/W	R/W	R/W	R/W	R/W
Reset	0	0	0	0	0	0	0	0	1	1	1	1	1	1	1	0

0x8002_0250 GPIO Pull Up/Down Select 2 GPIO_PULLSEL2

Bit	15	14	13	12	11	10	9	8	7	6	5	4	3	2	1	0
Name	GPIO 31	GPIO 30	GPIO 29	GPIO 28	GPIO 27	GPIO 26	GPIO 25	GPIO 24	GPIO 23	GPIO 22	GPIO 21	PGIO 20	GPIO 19	GPIO 18	GPIO 17	GPIO 16
Type	R/W	R/W	R/W	R/W	R/W	R/W	R/W	R/W	R/W	R/W	R/W	R/W	R/W	R/W	R/W	R/W
Reset	0	0	0	0	1	1	1	1	1	1	1	1	0	0	0	0

0x8002_0260 GPIO Pull Up/Down Select 3 GPIO_PULLSEL3

Bit	15	14	13	12	11	10	9	8	7	6	5	4	3	2	1	0
Name	GPIO 47	GPIO 46	GPIO 45	GPIO 44	GPIO 43	GPIO 42	GPIO 41	GPIO 40	GPIO 39	GPIO 38	GPIO 37	GPIO 36	GPIO 35	GPIO 34	GPIO 33	GPIO 32
Type	R/W	R/W	R/W	R/W	R/W	R/W	R/W	R/W	R/W	R/W	R/W	R/W	R/W	R/W	R/W	R/W
Reset	0	1	0	0	1	1	0	0	0	0	0	1	0	0	0	0

0x8002_0270 GPIO Pull Up/Down Select 4 GPIO_PULLSEL4

Bit	15	14	13	12	11	10	9	8	7	6	5	4	3	2	1	0
Name	GPIO 63	GPIO 62	GPIO 61	GPIO 60	GPIO 59	GPIO 58	GPIO 57	GPIO 56	GPIO 55	GPIO 54	GPIO 53	GPIO 52	GPIO 51	GPIO 50	GPIO 49	GPIO 48
Type	R/W	R/W	R/W	R/W	R/W	R/W	R/W	R/W	R/W	R/W	R/W	R/W	R/W	R/W	R/W	R/W
Reset	0	0	0	0	0	0	0	0	0	0	0	0	0	0	0	0

GPIO*n* GPIO pull up/down selection, only valid if corresponding GPIO_PULLEN is high

- **0** GPIOs pull down is selected
- **1** GPIOs pull up is selected

0x8002_0280 GPIO Pull Up/Down Select5 GPIO_PULLSEL5

Bit	15	14	13	12	11	10	9	8	7	6	5	4	3	2	1	0
Name	RESERVED									GPIO 70	GPIO 69	GPIO 68	GPIO 67	GPIO 66	GPIO 65	GPIO 64
Type	Reserved									R/W	R/W	R/W	R/W	R/W	R/W	R/W

MediaTek Confidential Release for Cenon WCX
MediaTek Confidential Release to Cenon WCX

This document contains information that is proprietary to MediaTek Inc.

Unauthorized reproduction or disclosure of this information in whole or in part is strictly prohibited.

Reset	Reserved	0	0	0	0	0	0	0

GPIO*n* GPIO pull up/down selection, only valid if corresponding GPIO_PULLEN is high

- **0** GPIOs pull down is selected
- **1** GPIOs pull up is selected

GPIO +0370h OE read-back selection GPIO_TM

Bit	15	14	13	12	11	10	9	8	7	6	5	4	3	2	1	0
Name																TM_DIR
Type																R/W
Reset																0

TM_DIR Select to read GPIO_DIRx as the real pad output-enable or the MCU-configured GPIO_DIR

- **0** MCU-configured
- **1** Real pad OE

GPIO+xxx4h GPIO xxx register SET GPIO_XXX_SET

For all registers addresses listed above, writing to the +4h addresse offset will perform a bit-wise **OR** function between the 16bit written value and the 16bit register value already existing in the corresponding GPIO_xxx registers.

Eg.

If GPIO_DIR1 (GPIO+0000h) = 16'h0F0F,

writing GPIO_DIR1_SET (GPIO+0004h) = 16'F0F0 will result in GPIO_DIR1 = 16'hFFFF.

GPIO+xxx8h GPIO xxx register CLR GPIO_XXX_CLR

For all registers addresses listed above, writing to the +8h addresse offset will perform a bit-wise **AND-NOT** function between the 16bit written value and the 16bit register value already existing in the corresponding GPIO_xxx registers.

Eg.

If GPIO_DIR1 (GPIO+0000h) = 16'h0F0F,

writing GPIO_DIR1_CLR (GPIO+0008h) = 16'0F0F will result in GPIO_DIR1 = 16'h0000.

MediaTek Confidential Release for Cenon WCX

This document contains information that is proprietary to MediaTek Inc.

Unauthorized reproduction or disclosure of this information in whole or in part is strictly prohibited.

CONFG +0700h **Misc usage** **ACIF_CON0**

Bit	31	30	29	28	27	26	25	24	23	22	21	20	19	18	17	16
Name	LCD_EA_SR	LCD_EA_E8	LCD_EA_E4	LCD_EA_E2	SF_RDSEL		SF_TDSEL		SF_IES	SF_SMT	RESERVED	RESERVED	SFE2	SFSR	SFE8	SFE4
Type	R/W	R/W	R/W	R/W	R/W		R/W		R/W	R/W	R/W	R/W	R/W	R/W	R/W	R/W
Reset	0	0	0	0	0		0		1	0	0	0	0	0	0	0
Bit	15	14	13	12	11	10	9	8	7	6	5	4	3	2	1	0
Name	BPIBUSSR	LCDSR	LCDE4	LCDE8	CMPCLKSMT	CMMCLKSR	CMMCLKE8	CMMCLKE4	RESERVED		BT_POWENSR	BT_POWENE4	BT_32KSR	BT_32KE4	D2ICK_SMT	D1ICK_SMT
Type	R/W	R/W	R/W	R/W	R/W	R/W	R/W	R/W			R/W	R/W	R/W	R/W	R/W	R/W
Reset	1	1	0	0	1	1	0	0			0	0	1	0	0	0

D1ICK_SMT

- **0** Host DSP ice clock without Schmitt trigger
- **1** Host DSP ice clock with Schmitt trigger.

D2ICK_SMT

- **0** Slave DSP ice clock without Schmitt trigger
- **1** Slave DSP ice clock with Schmitt trigger.

BT_32K E4

- **0** 2 mA
- **1** 6 mA.

BT_32K SR

- **0** Fast slew rate
- **1** Slow slew rate

BT_POWEN E4

- **0** 2 mA
- **1** 6 mA.

BT_ POWEN SR

- **0** Fast slew rate
- **1** Slow slew rate

CMMCLK E8

- **0** + 0 mA
- **1** + 8 mA. CMMCLK default is 4 mA.

CMMCLK E4

- **0** + 0 mA

MediaTek Confidential Release for Cenon WCX

This document contains information that is proprietary to MediaTek Inc.

Unauthorized reproduction or disclosure of this information in whole or in part is strictly prohibited.

MediaTek Confidential Release for Cenon WCX

1 + 4 mA. CMMCLK default is 4 mA.

CMMCLK SR

0 Fast slew rate

1 Slow slew rate

CMPCLK SMT

0 Disable SMT

1 Enable SMT

LCD E4

0 + 0 mA

1 + 4 mA. LCD related control pins default is 4 mA.

LCD E8

0 + 0 mA

1 + 8 mA. LCD related control pins default is 4 mA.

LCD SR

0 Fast slew rate

1 Slow slew rate

BPIBUS SR Note that BPIBUS driving current settings are located at BPI module

0 Fast slew rate

1 Slow slew rate

SF E4 Serial Flash driving current setting

0 + 0 mA

1 + 4 mA. Default is 2 mA.

SF E8 Serial Flash driving current setting

0 + 0 mA

1 + 8 mA. Default is 2 mA.

SF SR Serial Flash output slew rate

0 Fast slew rate

1 Slow slew rate

SF E2 Serial Flash driving current setting

0 + 0 mA

1 + 2 mA. Default is 2 mA.

SF_SMT SF SMT

0 Disable

1 Enable

SF_IES SF IES

0 Disable

This document contains information that is proprietary to MediaTek Inc.

Unauthorized reproduction or disclosure of this information in whole or in part is strictly prohibited.

MediaTek Confidential Release for Cenon WCX

1 Enable

SF_TDSEL IO_CUP RDSEL option for SF

00 Default mode

Others Experiment mode

SF_RDSEL IO_CUP TDSEL option for SF

00 Default mode

Others Experiment mode

LCD_EA E2 EA[15:12] driving current setting

0 + 0 mA

1 + 4 mA. Default is 2 mA.

LCD_EA E4 EA[15:12] driving current setting

0 + 0 mA

1 + 4 mA. Default is 2 mA.

LCD_EA E8 EA[15:12] driving current setting

0 + 0 mA

1 + 8 mA. Default is 2 mA.

LCD_EA SR EA[15:12] output slew rate

0 Fast slew rate

1 Slow slew rate

CONFG +0704h Misc usage ACIF_CON1

Bit	31	30	29	28	27	26	25	24	23	22	21	20	19	18	17	16
Name	LCD_ED_SR	LCD_ED_E8	LCD_ED_E4	LCD_ED_E2	LCD_EA_O_DEL				LCD_EA_RDSEL		LCD_EA_TDSEL		LCD_EA_IES	LCD_EA_SMT	LCD_EA_PD	LCD_EA_PU
Type	R/W	R/W	R/W	R/W	R/W				R/W		R/W		R/W	R/W	R/W	R/W
Reset	0	0	0	0	0				0		0		0	0	0	0
Bit	15	14	13	12	11	10	9	8	7	6	5	4	3	2	1	0
Name	RESERVED	KP_COL SR	KP_COL E2	KP_COL E4	RESERVED	CM SR	CM E8	CM E4	RESERVED	UART SR	UART E4	UART E8	RESERVED	EDI SR	EDI E4	EDI E8
Type	R/W	R/W	R/W	R/W	R/W	R/W	R/W	R/W	R/W	R/W	R/W	R/W	R/W	R/W	R/W	R/W
Reset	0	1	0	0	0	1	0	0	0	0	0	0	1	1	0	0

MediaTek Confidential Release for Cenon WCX

This document contains information that is proprietary to MediaTek Inc.

Unauthorized reproduction or disclosure of this information in whole or in part is strictly prohibited.

EDI E4 EDI driving current setting

- **0** + 0 mA
- **1** + 4 mA. EDI related control and data pins default is 4 mA.

EDI E8 EDI driving current setting

- **0** + 0 mA
- **1** + 8 mA. EDI related control and data pins default is 4 mA.

EDI SR

- **0** Fast slew rate
- **1** Slow slew rate

UART E4 UART data and control driving current setting(does not include UCTS1_B/URTS1_B)

- **0** + 0 mA
- **1** + 4 mA. UART related control and data pins default is 4 mA.

UART E8 UART data and control driving current setting(does not include UCTS1_B/URTS1_B)

- **0** + 0 mA
- **1** + 8 mA. UART related control and data pins default is 4 mA.

UART SR UART Output slew rate control (does not include UCTS1_B/URTS1_B)

- **0** Fast slew rate
- **1** Slow slew rate

CM E8 Camera output signal driving current setting

- **0** + 0 mA
- **1** + 8 mA. Camera related control and data pins default is 4 mA.

CM E4 Camera output signal driving current setting

- **0** + 0 mA
- **1** + 4 mA. Camera related control and data pins default is 4 mA.

CM SR

- **0** Fast slew rate
- **1** Slow slew rate

KP_COL E2 Key pad column driving current setting

- **0** + 0 mA
- **1** + 2 mA. Default is 2 mA.

KP_COL E4

- **0** + 0 mA
- **1** + 4 mA. Default is 2 mA.

KP_COL SR

- **0** Fast slew rate
- **1** Slow slew rate

MediaTek Confidential Release for Cenon WCX
MediaTek Confidential Release for Cenon WCX

This document contains information that is proprietary to MediaTek Inc.

Unauthorized reproduction or disclosure of this information in whole or in part is strictly prohibited.

MediaTek Confidential Release for Cenon WCX

LCD_EA_PU EA[15:12] PU
- **0** Disable
- **1** Enable

LCD_EA_PD EA[15:12] PD
- **0** Disable
- **1** Enable

LCD_EA_SMT EA[15:12] SMT
- **0** Disable
- **1** Enable

LCD_EA_IES EA[15:12] IES
- **0** Disable
- **1** Enable

LCD_EA_TDSEL IO_CUP RDSEL option for EA[15:12]
- **00** Default mode
- **Others** Experiment mode

LCD_EA_RDSEL IO_CUP TDSEL option for EA[15:12]
- **00** Default mode
- **Others** Experiment mode

LCD_EA_O_DEL IO_CUP Output delay for EA[15:12]

LCD_ED E2 ED[7:6] and EA[24:23] driving current setting
- **0** + 0 mA
- **1** + 4 mA. Default is 2 mA.

LCD_ED E4 ED[7:6] and EA[24:23] driving current setting
- **0** + 0 mA
- **1** + 4 mA. Default is 2 mA.

LCD_ED E8 ED[7:6] and EA[24:23] driving current setting
- **0** + 0 mA
- **1** + 8 mA. Default is 2 mA.

LCD_ED SR ED[7:6] and EA[24:23] output slew rate
- **0** Fast slew rate
- **1** Slow slew rate

MediaTek Confidential Release for Cenon WCX

CONFG +0708h **Misc usage** **ACIF_CON2**

Bit	31	30	29	28	27	26	25	24	23	22	21	20	19	18	17	16

Cenon WCX

This document contains information that is proprietary to MediaTek Inc.

Unauthorized reproduction or disclosure of this information in whole or in part is strictly prohibited.

Name	RESERVED	2V8_I2C SR	2V8_I2C E4	2V8_I2C E2	RESERVED	KROW_SLCM SR	KROW_SLCM E2	KROW_SLCM E4	RESERVED	MCINS SR	MCINS E4	MCINS E8	LCD_CSSR	LCD_CSE8	LCD_CSE4	LCD_CSE2
Type	R/W	R/W	R/W	R/W	R/W	R/W	R/W	R/W	R/W	R/W	R/W	R/W	R/W	R/W	R/W	R/W
Reset	0	0	0	0	0	0	0	0	0	0	0	0	0	0	0	0
Bit	15	14	13	12	11	10	9	8	7	6	5	4	3	2	1	0
Name	RESERVED		PWMSR	PWME8	RESERVED	WATCHDOGSR	WATCHDOGE2	WATCHDOGE4	SRCLKENAI SR	SRCLKENAI E4	SD_PWRENSR	SD_PWRENE4	KP_ROWSR	KP_ROWE4	CLK_RDSEL	CMD_RDSEL
Type			R/W	R/W	R/W	R/W	R/W	R/W	R/W	R/W	R/W	R/W	R/W	R/W	R/W	R/W
Reset			0	0	0	1	1	0	0	0	0	0	0	0	0	0

CMD_RDSEL MDDR IO_CUP RDSEL option for CMD_MACRO

- **0** Default mode
- **1** Experiment mode

CLK_RDSEL MDDR IO_CUP RDSEL option for CLK_MACRO

- **0** Default mode
- **1** Experiment mode

KP_ROW E2 Key pad row driving current setting

- **0** + 0 mA
- **1** + 2 mA. Default is 2 mA.

KP_ROW E4 Key pad row driving current setting

- **0** + 0 mA
- **1** + 4 mA. Default is 2 mA.

KP_ROW SR

- **0** Fast slew rate
- **1** Slow slew rate

SD_PWREN E4 MSDC power enable driving current setting

- **0** + 0 mA
- **1** + 4 mA. Default is 2 mA.

SD_PWREN SR

- **0** Fast slew rate
- **1** Slow slew rate

SRCLKENAI E4 Driving current setting

- **0** + 0 mA
- **1** + 4 mA. Default is 4 mA.

SRCLKENAI SR

MediaTek Confidential Release for Cenon WCX

This document contains information that is proprietary to MediaTek Inc.

Unauthorized reproduction or disclosure of this information in whole or in part is strictly prohibited.

0 Fast slew rate
1 Slow slew rate

WATCHDOG E2 Driving current setting
0 + 0 mA
1 + 2 mA. Default is 2 mA.

WATCHDOG E4 Driving current setting
0 + 0 mA
1 + 4 mA. Default is 2 mA.

WATCHDOG SR
0 Fast slew rate
1 Slow slew rate

PWM E8 Driving current setting
0 + 0 mA
1 + 8 mA. Default is 4 mA.

PWM SR
0 Fast slew rate
1 Slow slew rate

LCD_CS E2 ECS[3:2] driving current setting
0 + 0 mA
1 + 4 mA. Default is 2 mA.

LCD_CS E4 ECS[3:2] driving current setting
0 + 0 mA
1 + 4 mA. Default is 2 mA.

LCD_CS E8 ECS[3:2] driving current setting
0 + 0 mA
1 + 8 mA. Default is 2 mA.

LCD_CS SR ECS[3:2] output slew rate
0 Fast slew rate
1 Slow slew rate

MCINS E4 MCINS/UCTS1_B/URTS1_B output signal driving current setting
0 + 0 mA
1 + 4 mA. Default is 4 mA.

MCINS E8 MCINS/UCTS1_B/URTS1_B output signal driving current setting
0 + 0 mA
1 + 8 mA. Default is 4 mA.

MCINS SR MCINS/UCTS1_B/URTS1_B output slew rate control

MediaTek Confidential Release for Cenon WCX

This document contains information that is proprietary to MediaTek Inc.

Unauthorized reproduction or disclosure of this information in whole or in part is strictly prohibited.

0 Fast slew rate

1 Slow slew rate

KROW_SLCM E4 KROW[3:0] output signal driving current setting

0 + 0 mA

1 + 4 mA. Default is 4 mA.

KROW_SCLM E8 KROW[3:0] output signal driving current setting

0 + 0 mA

1 + 8 mA. Default is 4 mA.

KROW_SCLM SR KROW[3:0] output signal slew rate

0 Fast slew rate

1 Slow slew rate

2V8_I2C E2 KROW7 and GPIO70 output signal driving current setting

0 + 0 mA

1 + 2 mA. Default is 4 mA.

2V8_I2C E4 KROW7 and GPIO70 output signal driving current setting

0 + 0 mA

1 + 4 mA. Default is 4 mA.

2V8_I2C SR KROW7 and GPIO70 output signal slew rate

0 Fast slew rate

1 Slow slew rate

CONFG +070Ch Misc usage ACIF_CON3

Bit	31	30	29	28	27	26	25	24	23	22	21	20	19	18	17	16
Name	Reserved									JRTCK SR	JRTCK E2	JRTCK E4	RESERVED	KP_SLCM E8	KP_SLCM E4	KP_SLCM E2
Type	R/W									R/W	R/W	R/W	R/W	R/W	R/W	R/W
Reset	0									0	0	0	0	0	0	0
Bit	15	14	13	12	11	10	9	8	7	6	5	4	3	2	1	0
Name	EMI_IES	MCDPUPD	MCCPUPD	MCCKPUPD	TDSEL	RDSEL	ESERVED	BSI_EXT_SEL	JTDOSR	JTDOE2	RESERVED			DAISR	DAIE2	DAIE4
Type	R/W	R/W	R/W	R/W	R/W	R/W		R/W	R/W	R/W	R/W			R/W	R/W	R/W
Reset	0	0	0	0	0	0		0	1	1				1	1	0

DAI E2 Driving current setting

0 + 0 mA

MediaTek Confidential Release for Cenon WCX

This document contains information that is proprietary to MediaTek Inc.

Unauthorized reproduction or disclosure of this information in whole or in part is strictly prohibited.

MediaTek Confidential Release for Cenon WCX

1 + 2 mA. Default is 2 mA.

DAI E4 Driving current setting

0 + 0 mA

1 + 4 mA. Default is 2 mA.

DAI SR

0 Fast slew rate

1 Slow slew rate

JTDO E2 Driving current setting

0 + 0 mA

1 + 2 mA. Default is 2 mA.

JTDO SR

0 Fast slew rate

1 Slow slew rate

BSI_EXT_SEL BSI selection

0 Internal BSI

1 External BSI

RDSEL IO_CUP RDSEL option for GPIO

0 Default mode

1 Experiment mode

TDSEL IO_CUP TDSEL option for GPIO

0 Default mode

1 Experiment mode

MCCK_PUPD MCCK pad PUPD port connection

0 Pullup

1 Pulldown

MCC_PUPD MSDC command pad PUPD port connection

0 Pullup

1 Pulldown

MCD_PUPD MSDC data pads PUPD port connection

0 Pullup

1 Pulldown

EMI_IES EMI IES

0 Disable

1 Enable

KP_SCLM E4 KROW6 and KCOL7 driving current setting

MediaTek Confidential Release for Cenon WCX

This document contains information that is proprietary to MediaTek Inc.

Unauthorized reproduction or disclosure of this information in whole or in part is strictly prohibited.

0 + 0 mA
1 + 4 mA. Default is 4 mA.

KP_SCLM E8 KROW6 and KCOL7 driving current setting
0 + 0 mA
1 + 8 mA. Default is 4 mA.

KP_SCLM SR KROW6 and KCOL7 output signal slew rate
0 Fast slew rate
1 Slow slew rate

JRTCK E4 JRTCK driving current setting
0 + 0 mA
1 + 4 mA. Default is 4 mA.

JRTCK E2 JRTCK driving current setting
0 + 0 mA
1 + 2 mA. Default is 4 mA.

JRTCK SR JRTCK output signal slew rate
0 Fast slew rate
1 Slow slew rate

The pull-up pull-down resistance value for MCCK, MSDC command pad (MCCM0) and MSDC data pads (MCDA0) is determined by the following tables

PUPD	R0	R1	Result
0	0	0	high-Z
0	0	1	pull-up with 47K
0	1	0	pull-up with 47K
0	1	1	pull-up with 23.5K
1	0	0	high-Z
1	0	1	pull-down with 47K
1	1	0	pull-down with 47K
1	1	1	pull-down with 23.5K

Table 43 MSDC Input Ports Definition

MediaTek Confidential Release for Cenon WCX

This document contains information that is proprietary to MediaTek Inc.

Unauthorized reproduction or disclosure of this information in whole or in part is strictly prohibited.

MediaTek Confidential Release for Cenon WCX

MediaTek Confidential Release for Cenon WCX

This document contains information that is proprietary to MediaTek Inc.

Unauthorized reproduction or disclosure of this information in whole or in part is strictly prohibited.

PAD	PUPD	Aux. Func. 0	Aux. Func. 1
MCDA0 (GPIO38)	PU 47K	1. 0x8001070c[14] = 0 2. 0x80020070[6] = 1	1. 0x8001070c[14] = 0 2. 0x81110000[27:26]=0x1 or 0x2
	PU 23.5K	NA	1. 0x8001070c[14] = 0 2. 0x81110000[27:26]=0x3
	High-Z	1. 0x80020070[6] = 0	1. 0x81110000[27:26]=0x0
	PD 47K	1. 0x8001070c[14] = 1 2. 0x80020070[6] = 1	1. 0x8001070c[14] = 1 2. 0x81110000[27:26]=0x1 or 0x2
	PD 23.5K	NA	1. 0x8001070c[14] = 1 2. 0x81110000[27:26]=0x3
MCCK (GPIO37)	PU 47K	1. 0x8001070c[12] = 0 2. 0x80020070[5] = 1	1. 0x8001070c[12] = 0 2. 0x80020070[5] = 1
	PU 23.5K	NA	NA
	High-Z	1. 0x80020070[5] = 0	1. 0x80020070[5] = 0
	PD 47K	1. 0x8001070c[12] = 1 2. 0x80020070[5] = 1	1. 0x8001070c[12] = 1 2. 0x80020070[5] = 1
	PD 23.5K	NA	NA
MCCM0 (GPIO39)	PU 47K	1. 0x8001070c[13] = 0 2. 0x80020070[7] = 1	1. 0x8001070c[13] = 0 2. 0x81110000[25:24]=0x1 or 0x2
	PU 23.5K	NA	1. 0x8001070c[13] = 0 2. 0x81110000[25:24]=0x3
	High-Z	1. 0x80020070[7] = 0	1. 0x81110000[25:24]=0x0
	PD 47K	1. 0x8001070c[13] = 1 2. 0x80020070[7] = 1	1. 0x8001070c[13] = 1 2. 0x81110000[25:24]=0x1 or 0x2
	PD 23.5K	NA	1. 0x8001070c[13] = 1 2. 0x81110000[25:24]=0x3

MediaTek Confidential Release for Cenon WCX

This document contains information that is proprietary to MediaTek Inc.

Unauthorized reproduction or disclosure of this information in whole or in part is strictly prohibited.

MCINS (GPIO36)	PU	1. 0x80020070[4] = 1 2. 0x80020260[4] = 1	1. 0x81110014[9:8]=0x2
	High-Z	1. 0x80020070[4] = 0	1. 0x81110014[9:8]=0x0
	PD	1. 0x80020070[4] = 1 2. 0x80020260[4] = 0	1. 0x81110014[9:8]=0x1

Table 44 MT6253EL MSDC PADs Configurations

MediaTek Confidential Release for Cenon WCX

4.5 General Purpose Timer

4.5.1 General Description

Four general-purpose timers are provided. Three timers are 16 bits long and one timer is 32 bits long and run independently of each other. GPT1~3 use 32k clock source to count, whereas GPT4 uses 26M clock source. 26M clock source could be gated when system enters sleep mode and this will cause GPT4 stop counting, whereas 32k clock source is always toggling. GPT1 and GPT2 can operate in one of two modes: one-shot mode and auto-repeat mode; GPT3 and GPT4 are free running timer. In one-shot mode, when the timer counts down and reaches zero, it is halted. In auto-repeat mode, when the timer reaches zero, it simply resets to countdown initial value and repeats the countdown to zero; this loop repeats until the disable signal is set to 1. Regardless of the timer's mode, if the countdown initial value (i.e. GPTIMER1_DAT for GPT1 or GPTIMER_DAT2 for GPT2) is written when the timer is running, the new initial value does not take effect until the next time the timer is restarted. In auto-repeat mode, the new countdown start value is used on the next countdown iteration. Therefore, before enabling the gptimer, the desired values for GPTIMER_DAT and the GPTIMER_PRESCALER registers must first be set.

4.5.2 Register Definitions

REGISTER ADDRESS	REGISTER NAME	SYNONYM
0x8106_0000	General Purpose Timer 1 Control Register	GPTIMER1_CON
0x8106_0004	General Purpose Timer 1 Time-Out Interval Register	GPTIMER1_DAT
0x8106_0008	General Purpose Timer 2 Control Register	GPTIMER2_CON
0x8106_000C	General Purpose Timer 2 Time-Out Interval Register	GPTIMER2_DAT
0x8106_0010	General Purpose Timer Status Register	GPTIMER_STA

This document contains information that is proprietary to MediaTek Inc.

Unauthorized reproduction or disclosure of this information in whole or in part is strictly prohibited.

0x8106_0014	General Purpose Timer 1 Prescalar Register	GPTIMER1_PRESCALAR
0x8106_0018	General Purpose Timer 2 Prescalar Register	GPTIMER2_PRESCALAR
0x8106_001C	General Purpose Timer 3 Control Register	GPTIMER3_CON
0x8106_0020	General Purpose Timer 3 Time-Out Interval Register	GPTIMER3_DAT
0x8106_0024	General Purpose Timer 3 Prescalar Register	GPTIMER3_PRESCALAR
0x8106_0028	General Purpose Timer 4 Control Register	GPTIMER4_CON
0x8106_002C	General Purpose Timer 4 Data Register	GPTIMER4_DAT

Table 45 [General Purpose Timer Register Map]

0x8106_0000h GPT1 Control register

GPTIMER1_CON

Bit	31	30	29	28	27	26	25	24	23	22	21	20	19	18	17	16
Name																
Type																
Reset																
Bit	15	14	13	12	11	10	9	8	7	6	5	4	3	2	1	0
Name	EN	MODE														
Type	R/W	R/W														
Reset	0	0														

MODE This register controls GPT1 to count repeatedly (in a loop) or just one-shot.

- **0** One-shot mode is selected.
- **1** Auto-repeat mode is selected.

EN This register controls GPT1 to start counting or to stop.

- **0** GPT1 is disabled.
- **1** GPT1 is enabled.

0x8106_0004h GPT1 Time-Out Interval register

GPTIMER1_DAT

Bit	31	30	29	28	27	26	25	24	23	22	21	20	19	18	17	16
Name																
Type																
Reset																
Bit	15	14	13	12	11	10	9	8	7	6	5	4	3	2	1	0
Name	CNT [15:0]															
Type	R/W															
Reset	FFFFh															

MediaTek Confidential Release for Cenon WCX

This document contains information that is proprietary to MediaTek Inc.

Unauthorized reproduction or disclosure of this information in whole or in part is strictly prohibited.

CNT [15:0] Initial counting value. GPT1 counts down from GPTIMER1_DAT. When GPT1 counts down to zero, a GPT1 interrupt is generated.

0x8106_0008h GPT2 Control register — GPTIMER2_CON

Bit	31	30	29	28	27	26	25	24	23	22	21	20	19	18	17	16
Name																
Type																
Reset																
Bit	15	14	13	12	11	10	9	8	7	6	5	4	3	2	1	0
Name	EN	MODE														
Type	R/W	R/W														
Reset	0	0														

MODE This register controls GPT2 to count repeatedly (in a loop) or just one-shot.

- **0** One-shot mode is selected
- **1** Auto-repeat mode is selected

EN This register controls GPT2 to start counting or to stop.

- **0** GPT2 is disabled.
- **1** GPT2 is enabled.

0x8106_000Ch GPT2 Time-Out Interval register — GPTIMER2_DAT

Bit	31	30	29	28	27	26	25	24	23	22	21	20	19	18	17	16
Name																
Type																
Reset																
Bit	15	14	13	12	11	10	9	8	7	6	5	4	3	2	1	0
Name	CNT [15:0]															
Type	R/W															
Reset	FFFFh															

CNT [15:0] Initial counting value. GPT2 counts down from GPTIMER2_DAT. When GPT2 counts down to zero, a GPT2 interrupt is generated.

0x8106_0010h GPT Status register — GPTIMER_STA

Bit	31	30	29	28	27	26	25	24	23	22	21	20	19	18	17	16
Name																
Type																
Reset																
Bit	15	14	13	12	11	10	9	8	7	6	5	4	3	2	1	0

MediaTek Confidential Release for Cenon WCX

This document contains information that is proprietary to MediaTek Inc.

Unauthorized reproduction or disclosure of this information in whole or in part is strictly prohibited.

Name															GPT2	GPT1
Type															RC	RC
Reset															0	0

This register illustrates the gptimer timeout status. Each flag is set when the corresponding timer countdown completes, and can be cleared when the CPU reads the status register.

0x8106_0014h GPT1 Prescaler register

GPTIMER1_PRESCALER

Bit	31	30	29	28	27	26	25	24	23	22	21	20	19	18	17	16
Name																
Type																
Reset																
Bit	15	14	13	12	11	10	9	8	7	6	5	4	3	2	1	0
Name														PRESCALER [2:0]		
Type														R/W		
Reset														100b		

PRESCALER This register controls the counting clock for gptimer1.

000 16384 Hz
001 8192 Hz
010 4096 Hz
011 2048 Hz
100 1024 Hz
101 512 Hz
110 256 Hz
111 128 Hz

0x8106_0018h GPT2 Prescaler register

GPTIMER2_PRESCALER

Bit	31	30	29	28	27	26	25	24	23	22	21	20	19	18	17	16
Name																
Type																
Reset																
Bit	15	14	13	12	11	10	9	8	7	6	5	4	3	2	1	0
Name														PRESCALER [2:0]		
Type														R/W		
Reset														100b		

MediaTek Confidential Release for Cenon WCX

This document contains information that is proprietary to MediaTek Inc.

Unauthorized reproduction or disclosure of this information in whole or in part is strictly prohibited.

PRESCALER This register controls the counting clock for gptimer2.

- **000** 16384 Hz
- **001** 8192 Hz
- **010** 4096 Hz
- **011** 2048 Hz
- **100** 1024 Hz
- **101** 512 Hz
- **110** 256 Hz
- **111** 128 Hz

0x8106_001Ch GPT3 Control register

GPTIMER3_CON

Bit	31	30	29	28	27	26	25	24	23	22	21	20	19	18	17	16
Name																
Type																
Reset																
Bit	15	14	13	12	11	10	9	8	7	6	5	4	3	2	1	0
Name																**EN**
Type																R/W
Reset																0

EN This register controls GPT3 to start counting or to stop.

- **0** GPT3 is disabled.
- **1** GPT3 is enabled.

0x8106_0020h GPT3 Time-Out Interval register

GPTIMER3_DAT

Bit	31	30	29	28	27	26	25	24	23	22	21	20	19	18	17	16
Name																
Type																
Reset																
Bit	15	14	13	12	11	10	9	8	7	6	5	4	3	2	1	0
Name	**CNT [15:0]**															
Type	RO															
Reset	0															

CNT [15:0] If EN=1, GPT3 is a free running timer. This register records GPT3 value. If EN=0, this register is cleared to 0.

MediaTek Confidential Release for Cenon WCX

This document contains information that is proprietary to MediaTek Inc.

Unauthorized reproduction or disclosure of this information in whole or in part is strictly prohibited.

0x8106_0024h GPT3 Prescaler register

GPTIMER3_PRESCALER

Bit	31	30	29	28	27	26	25	24	23	22	21	20	19	18	17	16
Name																
Type																
Reset																
Bit	15	14	13	12	11	10	9	8	7	6	5	4	3	2	1	0
Name														PRESCALER [2:0]		
Type														R/W		
Reset														100b		

PRESCALER This register controls the counting clock for gptimer3.

- **000** 16384 Hz
- **001** 8192 Hz
- **010** 4096 Hz
- **011** 2048 Hz
- **100** 1024 Hz
- **101** 512 Hz
- **110** 256 Hz
- **111** 128 Hz

0x8106_0028h GPT4 Control register

GPTIMER4_CON

Bit	31	30	29	28	27	26	25	24	23	22	21	20	19	18	17	16
Name																
Type																
Reset																
Bit	15	14	13	12	11	10	9	8	7	6	5	4	3	2	1	0
Name															LOCK	EN
Type															R/W	R/W
Reset															0	0

EN This register controls GPT4 to start counting or to stop.

- **0** GPT4 is disabled.
- **1** GPT4 is enabled.

LOCK This register controls GPT4 EN bit can be modified or not

- **0** No lock. Software can configure EN bit
- **1** Lock. Software cannot program EN bit until reset

MediaTek Confidential Release for Cenon WCX

This document contains information that is proprietary to MediaTek Inc.

Unauthorized reproduction or disclosure of this information in whole or in part is strictly prohibited.

0x8106_002Ch GPT4 Data register

GPTIMER4_DAT

Bit	31	30	29	28	27	26	25	24	23	22	21	20	19	18	17	16
Name	CNT[31:16]															
Type	RO															
Reset	0															
Bit	15	14	13	12	11	10	9	8	7	6	5	4	3	2	1	0
Name	CNT [15:0]															
Type	RO															
Reset	0															

CNT [31:0] If EN=1, GPT4 is a free running timer. This register records GPT4 value. If EN=0, this register is cleared to 0.

This register is not allowed continuous read. Need at least 1 26M clock cycle between 2 APB reads.

4.6 UART

4.6.1 General Description

The baseband chipset houses three UARTs. The UARTs provide full duplex serial communication channels between baseband chipset and external devices.

The UART has M16C450 and M16550A modes of operation, which are compatible with a range of standard software drivers. The extensions have been designed to be broadly software compatible with 16550A variants, but certain areas offer no consensus.

In common with the M16550A, the UART supports word lengths **from five to eight bits**, **an optional parity bit** and one or two stop bits, and is fully programmable by an 8-bit CPU interface. A 16-bit programmable baud rate generator and an 8-bit scratch register are included, together with separate transmit and receive FIFOs. Eight modem control lines and a diagnostic loop-back mode are provided. The UART also includes two DMA handshake lines, used to indicate when the FIFOs are ready to transfer data to the CPU. Interrupts can be generated from any of the 10 sources.

Note: The UART has been designed so that all internal operations are synchronized by the CLK signal. This synchronization results in minor timing differences between the UART and the industry standard 16550A device, which means that the core is not clock for clock identical to the original device.

MediaTek Confidential Release for Cenon WCX

This document contains information that is proprietary to MediaTek Inc.

Unauthorized reproduction or disclosure of this information in whole or in part is strictly prohibited.

After a hardware reset, the UART is in M16C450 mode. Its FIFOs can be enabled and the UART can then enter M16550A mode. The UART adds further functionality beyond M16550A mode. Each of the extended functions can be selected individually under software control.

The UART provides more powerful enhancements than the industry-standard 16550:

- Hardware flow control. This feature is very useful when the ISR latency is hard to predict and control in the embedded applications. The MCU is relieved of having to fetch the received data within a fixed amount of time.

Note: In order to enable any of the enhancements, the Enhanced Mode bit, EFR[4], must be set. If EFR[4] is not set, IER[7:5], FCR[5:4], IIR[5:4] and MCR[7:6] cannot be written. The Enhanced Mode bit ensures that the UART is backward compatible with software that has been written for 16C450 and 16550A devices.

Error! Reference source not found. Fig 7 shows the block diagram of the UART device.

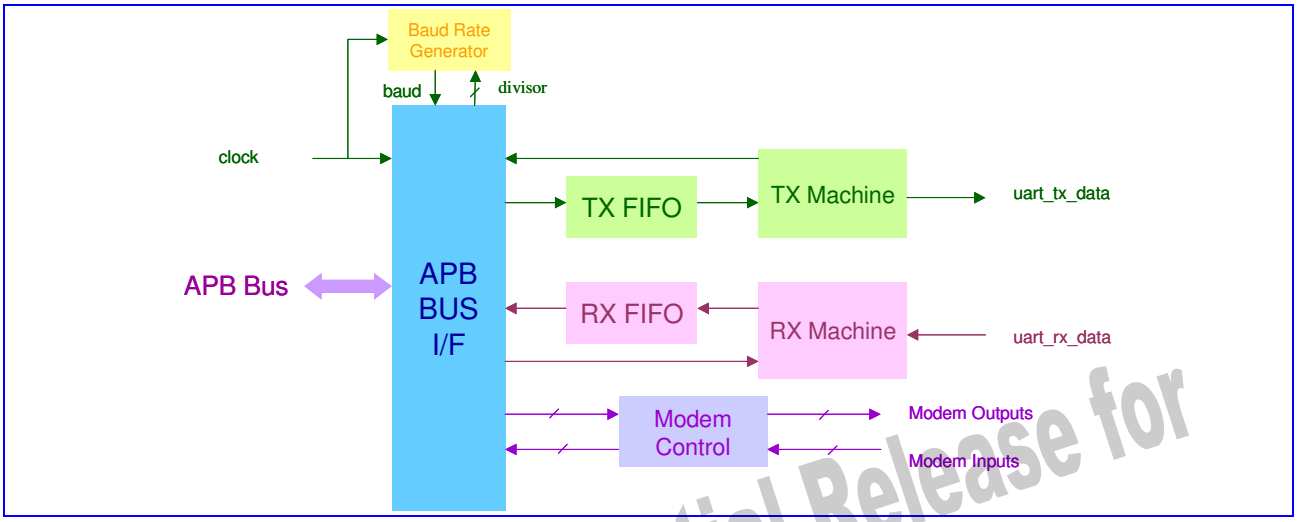

Figure 35 Block Diagram of UART

4.6.2 Register Definitions

UART1 Register Mapping Table:

MCU Register Addr.	Register Function	Acronym
81030000h	RX Buffer Register	UARTn_RBR

MediaTek Confidential Release for Cenon WCX

This document contains information that is proprietary to MediaTek Inc.

Unauthorized reproduction or disclosure of this information in whole or in part is strictly prohibited.

81030000h	TX Holding Register	UARTn_THR
81030004h	Interrupt Enable Register	UARTn_IER
81030008h	Interrupt Identification Register	UARTn_IIR
81030008h	FIFO Control Register	UARTn_FCR
8103000Ch	Line Control Register	UARTn_LCR
81030010h	Modem Control Register	UARTn_MCR
81030014h	Line Status Register	UARTn_LSR
81030018h	Modem Status Register	UARTn_MSR
8103001Ch	Scratch Register	UARTn_SCR
81030000h	Divisor Latch (LS)	uartn_dll
81030004h	Divisor Latch (MS)	uartn_dlM
81030008h	Enhanced Feature Register	UARTn_EFR
81030010h	XON1	UARTn_XON1
81030014h	XON2	UARTn_XON2
81030018h	XOFF1	UARTn_XOFF1
8103001Ch	XOFF2	UARTn_XOFF2
81030020h	AUTOBAUD_EN	UARTn_AUTOBAUD_EN
81030024h	HIGH SPEED UART	UARTn_HIGHSPEED
81030028h	SAMPLE_COUNT	UARTn_SAMPLE_COUNT
8103002Ch	SAMPLE_POINT	UARTn_SAMPLE_POINT

MediaTek Confidential Release for Cenon WCX
MediaTek Confidential Release for Cenon WCX

This document contains information that is proprietary to MediaTek Inc.

Unauthorized reproduction or disclosure of this information in whole or in part is strictly prohibited.

81030030h	AUTOBAUD_REG	UARTn_AUTOBAUD_REG
81030034h	Rate Fix Address	UARTn_RateFix_ad
81030038h	AUTOBAUDSAMPLE	UARTn_AUTOBAUDSAMPLE
8103003Ch	Guard time added register	UARTn_GUARD
81030040h	Escape character register	UARTn_ESCAPE_DAT
81030044h	Escape enable register	UARTn_ESCAPE_EN
81030048h	Sleep enable register	UARTn_SLEEP_EN
8103004Ch	Virtual FIFO enable register	UARTn_VFIFO_EN
81030050h	Rx Trigger Address	UARTn_RXTRI_AD
81030054h	Fractional Divider LSB Address	UARTn_Fracdiv_l
81030058h	Fractional Divider MSB Address	UARTn_FRACDIV_M

UART2 Register Mapping Table:

MCU Register Addr.	Register Function	Acronym
81040000h	RX Buffer Register	UARTn_RBR
81040000h	TX Holding Register	UARTn_THR
81040004h	Interrupt Enable Register	UARTn_IER
81040008h	Interrupt Identification Register	UARTn_IIR

MediaTek Confidential Release for Cenon WCX

This document contains information that is proprietary to MediaTek Inc.

Unauthorized reproduction or disclosure of this information in whole or in part is strictly prohibited.

81040008h	FIFO Control Register	UARTn_FCR
8104000Ch	Line Control Register	UARTn_LCR
81040010h	Modem Control Register	UARTn_MCR
81040014h	Line Status Register	UARTn_LSR
81040018h	Modem Status Register	UARTn_MSR
8104001Ch	Scratch Register	UARTn_SCR
81040000h	Divisor Latch (LS)	uartn_dll
81040004h	Divisor Latch (MS)	uartn_dlM
81040008h	Enhanced Feature Register	UARTn_EFR
81040010h	XON1	UARTn_XON1
81040014h	XON2	UARTn_XON2
81040018h	XOFF1	UARTn_XOFF1
8104001Ch	XOFF2	UARTn_XOFF2
81040020h	AUTOBAUD_EN	UARTn_AUTOBAUD_EN
81040024h	HIGH SPEED UART	UARTn_HIGHSPEED
81040028h	SAMPLE_COUNT	UARTn_SAMPLE_COUNT
8104002Ch	SAMPLE_POINT	UARTn_SAMPLE_POINT
81040030h	AUTOBAUD_REG	UARTn_AUTOBAUD_REG
81040034h	Rate Fix Address	UARTn_RateFix_ad
81040038h	AUTOBAUDSAMPLE	UARTn_AUTOBAUDSAMPLE
8104003Ch	Guard time added	UARTn_GUARD

MediaTek Confidential Release for Cenon WCX
MediaTek Confidential Release for Cenon WCX

This document contains information that is proprietary to MediaTek Inc.

Unauthorized reproduction or disclosure of this information in whole or in part is strictly prohibited.

	register	
81040040h	Escape character register	UARTn_ESCAPE_DAT
81040044h	Escape enable register	UARTn_ESCAPE_EN
81040048h	Sleep enable register	UARTn_SLEEP_EN
8104004Ch	Virtual FIFO enable register	UARTn_VFIFO_EN
81040050h	Rx Trigger Address	UARTn_RXTRI_AD
81040054h	Fractional Divider LSB Address	UARTn_Fracdiv_l
81040058h	Fractional Divider MSB Address	UARTn_FRACDIV_M

UART3 Register Mapping Table:

MCU Register Addr.	Register Function	Acronym
81050000h	RX Buffer Register	UARTn_RBR
81050000h	TX Holding Register	UARTn_THR
81050004h	Interrupt Enable Register	UARTn_IER
81050008h	Interrupt Identification Register	UARTn_IIR
81050008h	FIFO Control Register	UARTn_FCR
8105000Ch	Line Control Register	UARTn_LCR
81050010h	Modem Control Register	UARTn_MCR

MediaTek Confidential Release for Cenon WCX

This document contains information that is proprietary to MediaTek Inc.

Unauthorized reproduction or disclosure of this information in whole or in part is strictly prohibited.

81050014h	Line Status Register	UARTn_LSR
81050018h	Modem Status Register	UARTn_MSR
8105001Ch	Scratch Register	UARTn_SCR
81050000h	Divisor Latch (LS)	uartn_dll
81050004h	Divisor Latch (MS)	uartn_dlM
81050008h	Enhanced Feature Register	UARTn_EFR
81050010h	XON1	UARTn_XON1
81050014h	XON2	UARTn_XON2
81050018h	XOFF1	UARTn_XOFF1
8105001Ch	XOFF2	UARTn_XOFF2
81050020h	AUTOBAUD_EN	UARTn_AUTOBAUD_EN
81050024h	HIGH SPEED UART	UARTn_HIGHSPEED
81050028h	SAMPLE_COUNT	UARTn_SAMPLE_COUNT
8105002Ch	SAMPLE_POINT	UARTn_SAMPLE_POINT
81050030h	AUTOBAUD_REG	UARTn_AUTOBAUD_REG
81050034h	Rate Fix Address	UARTn_RateFix_ad
81050038h	AUTOBAUDSAMPLE	UARTn_AUTOBAUDSAMPLE
8105003Ch	Guard time added register	UARTn_GUARD
81050040h	Escape character register	UARTn_ESCAPE_DAT
81050044h	Escape enable register	UARTn_ESCAPE_EN

MediaTek Confidential Release for Cenon WCX
MediaTek Confidential Release for Cenon WCX

This document contains information that is proprietary to MediaTek Inc.

Unauthorized reproduction or disclosure of this information in whole or in part is strictly prohibited.

81050048h	Sleep enable register	UARTn_SLEEP_EN
8105004Ch	Virtual FIFO enable register	UARTn_VFIFO_EN
81050050h	Rx Trigger Address	UARTn_RXTRI_AD
81050054h	Fractional Divider LSB Address	UARTn_Fracdiv_l
81050058h	Fractional Divider MSB Address	UARTn_FRACDIV_M

n = 1, 2, 3; for uart1, uart2 and uart3 respectively.

UARTn+0000h RX Buffer Register — UARTn_RBR

Bit	15	14	13	12	11	10	9	8	7	6	5	4	3	2	1	0
Name									RBR[7:0]							
Type									RO							

RBR RX Buffer Register. Read-only register. The received data can be read by accessing this register. Modified when LCR[7] = 0.

UARTn+0000h TX Holding Register — UARTn_THR

Bit	15	14	13	12	11	10	9	8	7	6	5	4	3	2	1	0
Name									THR[7:0]							
Type									WO							

THR TX Holding Register. Write-only register. The data to be transmitted is written to this register, and then sent to the PC via serial communication.
Modified when LCR[7] = 0.

UARTn+0004h Interrupt Enable Register — UARTn_IER

Bit	15	14	13	12	11	10	9	8	7	6	5	4	3	2	1	0
Name									CTSI	RTSI	XOFFI	VFF_FC_EN	EDSSI	ELSI	ETBEI	ERBFI
Type									R/W							
Reset									0							

IER By storing a '1' to a specific bit position, the interrupt associated with that bit is enabled. Otherwise, the interrupt is disabled.

MediaTek Confidential Release for Cenon WCX

This document contains information that is proprietary to MediaTek Inc.

Unauthorized reproduction or disclosure of this information in whole or in part is strictly prohibited.

IER[3:0] are modified when LCR[7] = 0.

IER[7:4] are modified when LCR[7] = 0 & EFR[4] = 1.

CTSI Masks an interrupt that is generated when a rising edge is detected on the CTS modem control line.

Note: This interrupt is only enabled when hardware flow control is enabled.

0 Mask an interrupt that is generated when a rising edge is detected on the CTS modem control line.

1 Unmask an interrupt that is generated when a rising edge is detected on the CTS modem control line.

RTSI Masks an interrupt that is generated when a rising edge is detected on the RTS modem control line.

Note: This interrupt is only enabled when hardware flow control is enabled.

0 Mask an interrupt that is generated when a rising edge is detected on the RTS modem control line.

1 Unmask an interrupt that is generated when a rising edge is detected on the RTS modem control line.

XOFFI Masks an interrupt that is generated when an XOFF character is received.

Note: This interrupt is only enabled when software flow control is enabled.

0 Mask an interrupt that is generated when an XOFF character is received.

1 Unmask an interrupt that is generated when an XOFF character is received.

VFF_FC_EN Enable flow control triggered by RX FIFO full when VFIFO_EN is set.

EDSSI When set ("1"), an interrupt is generated if DDCD, TERI, DDSR or DCTS (MSR[4:1]) becomes set.

0 No interrupt is generated if DDCD, TERI, DDSR or DCTS (MSR[4:1]) becomes set.

1 An interrupt is generated if DDCD, TERI, DDSR or DCTS (MSR[4:1]) becomes set.

ELSI When set ("1"), an interrupt is generated if BI, FE, PE or OE (LSR[4:1]) becomes set.

0 No interrupt is generated if BI, FE, PE or OE (LSR[4:1]) becomes set.

1 An interrupt is generated if BI, FE, PE or OE (LSR[4:1]) becomes set.

ETBEI When set ("1"), an interrupt is generated if the TX Holding Register is empty or the contents of the TX FIFO have been reduced to its Trigger Level.

0 No interrupt is generated if the TX Holding Register is empty or the contents of the TX FIFO have been reduced to its Trigger Level.

1 An interrupt is generated if the TX Holding Register is empty or the contents of the TX FIFO have been reduced to its Trigger Level

ERBFI When set ("1"), an interrupt is generated if the RX Buffer contains data.

0 No interrupt is generated if the RX Buffer contains data.

1 An interrupt is generated if the RX Buffer contains data.

UARTn+0008h Interrupt Identification Register — UARTn_IIR

Bit	15	14	13	12	11	10	9	8	7	6	5	4	3	2	1	0
Name									FIFOE		ID4	ID3	ID2	ID1	ID0	NINT
Type									RO							
Reset									0	0	0	0	0	0	0	1

MediaTek Confidential Release for Cenon WCX

This document contains information that is proprietary to MediaTek Inc.

Unauthorized reproduction or disclosure of this information in whole or in part is strictly prohibited.

IIR Identify if there are pending interrupts; ID4 and ID3 are presented only when EFR[4] = 1.
The following table gives the IIR[5:0] codes associated with the possible interrupts:

IIR[5:0]	Priority Level	Interrupt	Source
000001	-	No interrupt pending	
000110	1	Line Status Interrupt	BI, FE, PE or OE set in LSR (Under IER[2]=1)
000100	2	RX Data Received	RX Data received or RX Trigger Level reached. (Under IER[0]=1)
001100	2	RX Data Timeout	Timeout on character in RX FIFO. (Under IER[0]=1)
000010	3	TX Holding Register Empty	TX Holding Register empty or TX FIFO Trigger Level reached. (Under IER[1]=1)
000000	4	Modem Status change	DDCD, TERI, DDSR or DCTS set in MSR (Under IER[3]=1)
010000	5	Software Flow Control	XOFF Character received (Under IER[5]=1)
100000	6	Hardware Flow Control	CTS or RTS Rising Edge (Under IER[6]=1, EDR[6]=1)

Table 46 The IIR[5:0] codes associated with the possible interrupts

Line Status Interrupt: A RX Line Status Interrupt (IIR[5:0`] == 000110b) is generated if ELSI (IER[2]) is set and any of BI, FE, PE or OE (LSR[4:1]) becomes set. The interrupt is cleared by reading the Line Status Register.

RX Data Received Interrupt: A RX Received interrupt (IER[5:0] == 000100b) is generated if EFRBI (IER[0]) is set and either RX Data is placed in the RX Buffer Register or the RX Trigger Level is reached. The interrupt is cleared by reading the RX Buffer Register or the RX FIFO (if enabled).

RX Data Timeout Interrupt:

When virtual FIFO mode is disabled, RX Data Timeout Interrupt is generated if all of the following apply:

1. FIFO contains at least one character;
2. The most recent character was received longer than four character periods ago (including all start, parity and stop bits);
3. The most recent CPU read of the FIFO was longer than four character periods ago.

MediaTek Confidential Release for Cenon WCX

This document contains information that is proprietary to MediaTek Inc.

Unauthorized reproduction or disclosure of this information in whole or in part is strictly prohibited.

The timeout timer is restarted on receipt of a new byte from the RX Shift Register, or on a CPU read from the RX FIFO.

The RX Data Timeout Interrupt is enabled by setting EFRBI (IER[0]) to 1, and is cleared by reading RX FIFO.

When virtual FIFO mode is enabled, RX Data Timeout Interrupt is generated if all of the following apply:

1. FIFO is empty;
2. The most recent character was received longer than four character periods ago (including all start, parity and stop bits);
3. The most recent CPU read of the FIFO was longer than four character periods ago.

The timeout timer is restarted on receipt of a new byte from the RX Shift Register.

TX Holding Register Empty Interrupt: A TX Holding Register Empty Interrupt (IIR[5:0] = 000010b) is generated if ETRBI (IER[1]) is set and either the TX Holding Register or, if FIFOs are enabled, the TX FIFO becomes empty. The interrupt is cleared by writing to the TX Holding Register or TX FIFO if FIFO enabled.

Modem Status Change Interrupt: A Modem Status Change Interrupt (IIR[5:0] = 000000b) is generated if EDSSI (IER[3]) is set and either DDCD, TERI, DDSR or DCTS (MSR[3:0]) becomes set. The interrupt is cleared by reading the Modem Status Register.

Software Flow Control Interrupt: A Software Flow Control Interrupt (IIR[5:0] = 010000b) is generated if Software Flow Control is enabled and XOFFI (IER[5]) becomes set, indicating that an XOFF character has been received. The interrupt is cleared by reading the Interrupt Identification Register.

Hardware Flow Control Interrupt: A Hardware Flow Control Interrupt (IER[5:0] = 100000b) is generated if Hardware Flow Control is enabled and either RTSI (IER[6]) or CTSI (IER[7]) becomes set indicating that a rising edge has been detected on either the RTS/CTS Modem Control line. The interrupt is cleared by reading the Interrupt Identification Register.

UARTn+0008h FIFO Control Register — UARTn_FCR

Bit	15	14	13	12	11	10	9	8	7	6	5	4	3	2	1	0
Name									RFTL1	RFTL0	TFTL1	TFTL0	DMA1	CLRT	CLRR	FIFOE
Type									WO							

FCR FCR is used to control the trigger levels of the FIFOs, or flush the FIFOs.
FCR[7:6] is modified when LCR != BFh
FCR[5:4] is modified when LCR != BFh & EFR[4] = 1
FCR[4:0] is modified when LCR != BFh

FCR[7:6] RX FIFO trigger threshold. (RX FIFO contains total 24 bytes.)

0 1

MediaTek Confidential Release for Cenon WCX

This document contains information that is proprietary to MediaTek Inc.

Unauthorized reproduction or disclosure of this information in whole or in part is strictly prohibited.

1 6
2 12
3 **RXTRIG**

FCR[5:4] TX FIFO trigger threshold (TX FIFO contains total 16 bytes.)
0 1
1 4
2 8
3 14 (FIFOSIZE - 2)

DMA1 This bit determines the DMA mode, which the TXRDY and RXRDY pins support. TXRDY and RXRDY act to support single-byte transfers between the UART and memory (DMA mode 0) or multiple byte transfers (DMA mode1). Note that this bit has no effect unless the FIFOE bit is set as well
0 The device operates in DMA Mode 0.
1 The device operates in DMA Mode 1.

TXRDY – mode0: Goes active (low) when the TX FIFO or the TX Holding Register is empty. And it becomes inactive when a byte is written to the Transmit channel.

TXRDY – mode1: Goes active (low) when there are no characters in the TX FIFO. And it becomes inactive when the TX FIFO is full.

RXRDY – mode0: Becomes active (low) when at least one character is in the RX FIFO or the RX Buffer Register is full. And it becomes inactive when there are no more characters in the RX FIFO or RX Buffer register.

RXRDY – mode1: Becomes active (low) when the RX FIFO Trigger Level is reached or an RX FIFO Character Timeout occurs. And it goes inactive when the RX FIFO is empty.

CLRT Clear Transmit FIFO. This bit is self-clearing.
0 Leave TX FIFO intact.
1 Clear all the bytes in the TX FIFO.

CLRR Clear Receive FIFO. This bit is self-clearing.
0 Leave RX FIFO intact.
1 Clear all the bytes in the RX FIFO.

FIFOE FIFO Enabled. This bit must be set to 1 for any of the other bits in the registers to have any effect.
0 Disable both the RX and TX FIFOs.
1 Enable both the RX and TX FIFOs.

UARTn+000Ch Line Control Register — UARTn_LCR

Bit	15	14	13	12	11	10	9	8	7	6	5	4	3	2	1	0
Name									DLAB	SB	SP	EPS	PEN	STB	WLS1	WLS0
Type									R/W							
Reset									0	0	0	0	0	0	0	0

MediaTek Confidential Release for Cenon WCX

This document contains information that is proprietary to MediaTek Inc.

Unauthorized reproduction or disclosure of this information in whole or in part is strictly prohibited.

LCR Line Control Register. Determines characteristics of serial communication signals. Modified when LCR[7] = 0.

DLAB Divisor Latch Access Bit.

- **0** The RX and TX Registers are read/written at Address 0 and the IER register is read/written at Address 4.
- **1** The Divisor Latch LS is read/written at Address 0 and the Divisor Latch MS is read/written at Address 4.

SB Set Break

- **0** No effect
- **1** SOUT signal is forced into the "0" state.

SP Stick Parity

- **0** No effect.
- **1** The Parity bit is forced into a defined state, depending on the states of EPS and PEN:
  If EPS=1 & PEN=1, the Parity bit is set and checked = 0.
  If EPS=0 & PEN=1, the Parity bit is set and checked = 1.

EPS Even Parity Select

- **0** When EPS=0, an odd number of ones is sent and checked.
- **1** When EPS=1, an even number of ones is sent and checked.

PEN Parity Enable

- **0** The Parity is neither transmitted nor checked.
- **1** The Parity is transmitted and checked.

STB Number of STOP bits

- **0** One STOP bit is always added.
- **1** Two STOP bits are added after each character is sent; unless the character length is 5 when 1 STOP bit is added.

WLS1, 0 Word Length Select.

- **0** 5 bits
- **1** 6 bits
- **2** 7 bits
- **3** 8 bits

UARTn+0010h Modem Control Register — UARTn_MCR

Bit	15	14	13	12	11	10	9	8	7	6	5	4	3	2	1	0
Name									XOFF STATUS		DCM_EN	LOOP	OUT2	OUT1	RTS	DTR
Type									R/W							
Reset									0		0	0	0	0	0	0

MCR Modem Control Register. Control interface signals of the UART.

MediaTek Confidential Release for Cenon WCX

This document contains information that is proprietary to MediaTek Inc.

Unauthorized reproduction or disclosure of this information in whole or in part is strictly prohibited.

MCR[4:0] are modified when LCR[7] = 0,
MCR[7:6] are modified when LCR[7] = 0 & EFR[4] = 1.

XOFF Status This is a read-only bit.

- **0** When an XON character is received.
- **1** When an XOFF character is received.

DCM_EN DCM Function enable

- **0** DCM function is forbidden.
- **1** DCM function is permit.

LOOP Loop-back control bit.

- **0** No loop-back is enabled.
- **1** Loop-back mode is enabled.

OUT2 Controls the state of the output NOUT2, even in loop mode.

- **0** NOUT2=1.
- **1** NOUT2=0.

OUT1 Controls the state of the output NOUT1, even in loop mode.

- **0** NOUT1=1.
- **1** NOUT1=0.

RTS Controls the state of the output NRTS, even in loop mode.

- **0** NRTS=1.
- **1** NRTS=0.

DTR Control the state of the output NDTR, even in loop mode.

- **0** NDTR=1.
- **1** NDTR=0.

UARTn+0014h Line Status Register UARTn_LSR

Bit	15	14	13	12	11	10	9	8	7	6	5	4	3	2	1	0
Name									FIFOERR	TEMT	THRE	BI	FE	PE	OE	DR
Type									R/W							
Reset									0	1	1	0	0	0	0	0

LSR Line Status Register.
Modified when LCR[7] = 0.

FIFOERR RX FIFO Error Indicator.

- **0** No PE, FE, BI set in the RX FIFO.
- **1** Set to 1 when there is at least one PE, FE or BI in the RX FIFO.

TEMT TX Holding Register (or TX FIFO) and the TX Shift Register are empty.

- **0** Empty conditions below are not met.

MediaTek Confidential Release for Cenon WCX

This document contains information that is proprietary to MediaTek Inc.

Unauthorized reproduction or disclosure of this information in whole or in part is strictly prohibited.

1 If FIFOs are enabled, the bit is set whenever the TX FIFO and the TX Shift Register are empty. If FIFOs are disabled, the bit is set whenever TX Holding Register and TX Shift Register are empty.

THRE Indicates if there is room for TX Holding Register or TX FIFO is reduced to its Trigger Level.

0 **Reset whenever the contents of the TX FIFO are more than its Trigger Level (FIFOs are enabled), or whenever TX Holding Register is not empty(FIFOs are disabled).**

1 Set whenever the contents of the TX FIFO are reduced to its Trigger Level (FIFOs are enabled), or whenever TX Holding Register is empty and ready to accept new data (FIFOs are disabled).

BI Break Interrupt.

0 Reset by the CPU reading this register

1 If the FIFOs are disabled, this bit is set whenever the SIN is held in the 0 state for more than one transmission time (START bit + DATA bits + PARITY + STOP bits).
If the FIFOs are enabled, this error is associated with a corresponding character in the FIFO and is flagged when this byte is at the top of the FIFO. When a break occurs, only one zero character is loaded into the FIFO: the next character transfer is enabled when SIN goes into the marking state and receives the next valid start bit.

FE Framing Error.

0 Reset by the CPU reading this register

1 If the FIFOs are disabled, this bit is set if the received data did not have a valid STOP bit. If the FIFOs are enabled, the state of this bit is revealed when the byte it refers to is the next to be read.

PE Parity Error

0 Reset by the CPU reading this register

1 If the FIFOs are disabled, this bit is set if the received data did not have a valid parity bit. If the FIFOs are enabled, the state of this bit is revealed when the referred byte is the next to be read.

OE Overrun Error.

0 Reset by the CPU reading this register.

1 If the FIFOs are disabled, this bit is set if the RX Buffer was not read by the CPU before new data from the RX Shift Register overwrote the previous contents.
If the FIFOs are enabled, an overrun error occurs when the RX FIFO is full and the RX Shift Register becomes full. OE is set as soon as this happens. The character in the Shift Register is then overwritten, but not transferred to the FIFO.

DR Data Ready.

0 Cleared by the CPU reading the RX Buffer or by reading all the FIFO bytes.

1 Set by the RX Buffer becoming full or by a byte being transferred into the FIFO.

UARTn+0018h Modem Status Register — UARTn_MSR

Bit	15	14	13	12	11	10	9	8	7	6	5	4	3	2	1	0

MediaTek Confidential Release for Cenon WCX

This document contains information that is proprietary to MediaTek Inc.

Unauthorized reproduction or disclosure of this information in whole or in part is strictly prohibited.

Name									DCD	RI	DSR	CTS	DDCD	TERI	DDSR	DCTS
Type									R/W	R/W	R/W	R/W	R/W	R/W	R/W	R/W
Reset									Input	Input	Input	Input	0	0	0	0

Note: After a reset, D4-D7 are inputs. A modem status interrupt can be cleared by writing ‘0’ or set by writing ‘1’ to this register. D0-D3 can be written to.

Modified when LCR[7] = 0.

MSR Modem Status Register

DCD Data Carry Detect.

When Loop = "0", this value is the complement of the NDCD input signal.

When Loop = "1", this value is equal to the OUT2 bit in the Modem Control Register.

RI Ring Indicator.

When Loop = "0", this value is the complement of the NRI input signal.

When Loop = "1", this value is equal to the OUT1 bit in the Modem Control Register.

DSR Data Set Ready

When Loop = "0", this value is the complement of the NDSR input signal.

When Loop = "1", this value is equal to the DTR bit in the Modem Control Register.

CTS Clear To Send.

When Loop = "0", this value is the complement of the NCTS input signal.

When Loop = "1", this value is equal to the RTS bit in the Modem Control Register.

DDCD Delta Data Carry Detect.

- **0** The state of DCD has not changed since the Modem Status Register was last read
- **1** Set if the state of DCD has changed since the Modem Status Register was last read.

TERI Trailing Edge Ring Indicator

- **0** The NRI input does not change since this register was last read.
- **1** Set if the NRI input changes from “0” to “1” since this register was last read.

DDSR Delta Data Set Ready

- **0** Cleared if the state of DSR has not changed since this register was last read.
- **1** Set if the state of DSR has changed since this register was last read.

DCTS Delta Clear To Send

- **0** Cleared if the state of CTS has not changed since this register was last read.
- **1** Set if the state of CTS has changed since this register was last read.

MediaTek Confidential Release for Cenon WCX

This document contains information that is proprietary to MediaTek Inc.

Unauthorized reproduction or disclosure of this information in whole or in part is strictly prohibited.

UARTn+001Ch Scratch Register — UARTn_SCR

Bit	15	14	13	12	11	10	9	8	7	6	5	4	3	2	1	0
Name									SCR[7:0]							
Type									R/W							

A general purpose read/write register. After reset, its value is un-defined.

Modified when LCR[7] = 0.

UARTn+0000h Divisor Latch (LS) — UARTn_DLL

Bit	15	14	13	12	11	10	9	8	7	6	5	4	3	2	1	0
Name									DLL[7:0]							
Type									R/W							
Reset									1							

UARTn+0004h Divisor Latch (MS) — UARTn_DLM

Bit	15	14	13	12	11	10	9	8	7	6	5	4	3	2	1	0
Name									DLM[7:0]							
Type									R/W							
Reset									0							

Note: DLL & DLM can only be updated if DLAB is set ("1").. Note too that division by 1 generates a BAUD signal that is constantly high.

Modified when LCR[7] = 1.

The table below shows the divisor needed to generate a given baud rate from CLK inputs of 13, 26 MHz and 52 MHz. The effective clock enable generated is 16 x the required baud rate.

BAUD	6.5MHz	13MHz	26MHz	52MHz
110	3693	7386	14773	29545
300	1354	2708	5417	10833
1200	338	677	1354	2708
2400	169	338	677	1354
4800	85	169	339	677
9600	42	85	169	339
19200	21	42	85	169
38400	11	21	42	85
57600	7	14	28	56

MediaTek Confidential Release for Cenon WCX

This document contains information that is proprietary to MediaTek Inc.

Unauthorized reproduction or disclosure of this information in whole or in part is strictly prohibited.

115200	*	6	14	28

Table 47 Divisor needed to generate a given baud rate

UARTn+0008h Enhanced Feature Register — UARTn_EFR

Bit	15	14	13	12	11	10	9	8	7	6	5	4	3	2	1	0
Name									AUTO CTS	AUTO RTS		ENABLE -E	SW FLOW CONT[3:0]			
Type									R/W	R/W		R/W	R/W			
Reset									0	0		0	0			

*NOTE: Only when LCR=BF'h

Auto CTS Enables hardware transmission flow control
- **0** Disabled.
- **1** Enabled.

Auto RTS Enables hardware reception flow control
- **0** Disabled.
- **1** Enabled.

Enable-E Enable enhancement features.
- **0** Disabled.
- **1** Enabled.

CONT[3:0] Software flow control bits.
- **00xx** No TX Flow Control
- **10xx** Transmit XON1/XOFF1 as flow control bytes
- **01xx** Transmit XON2/XOFF2 as flow control bytes
- **11xx** Transmit XON1 & XON2 and XOFF1 & XOFF2 as flow control words
- **xx00** No RX Flow Control
- **xx10** Receive XON1/XOFF1 as flow control bytes
- **xx01** Receive XON2/XOFF2 as flow control bytes
- **xx11** Receive XON1 & XON2 and XOFF1 & XOFF2 as flow control words

UARTn+0010h XON1 — UARTn_XON1

Bit	15	14	13	12	11	10	9	8	7	6	5	4	3	2	1	0
Name									XON1[7:0]							
Type									R/W							
Reset									0							

MediaTek Confidential Release for Cenon WCX

This document contains information that is proprietary to MediaTek Inc.

Unauthorized reproduction or disclosure of this information in whole or in part is strictly prohibited.

UARTn+0014h XON2 UARTn_XON2

Bit	15	14	13	12	11	10	9	8	7	6	5	4	3	2	1	0
Name									XON2[7:0]							
Type									R/W							
Reset									0							

UARTn+0018h XOFF1 UARTn_XOFF1

Bit	15	14	13	12	11	10	9	8	7	6	5	4	3	2	1	0
Name									XOFF1[7:0]							
Type									R/W							
Reset									0							

UARTn+001Ch XOFF2 UARTn_XOFF2

Bit	15	14	13	12	11	10	9	8	7	6	5	4	3	2	1	0
Name									XOFF2[7:0]							
Type									R/W							
Reset									0							

*Note: XON1, XON2, XOFF1, XOFF2 are valid only when LCR=BFh.

UARTn+0020h AUTOBAUD_EN UARTn_AUTOBAUD_EN

Bit	15	14	13	12	11	10	9	8	7	6	5	4	3	2	1	0
Name																AUTO_EN
Type																R/W
Reset																0

AUTOBAUD_EN Auto-baud enable signal

- **0** Auto-baud function disable
- **1** Auto-baud function enable (UARTn+0024h SPEED should be set 0)

UARTn+0024h HIGH SPEED UART UARTn_HIGHSPEED

Bit	15	14	13	12	11	10	9	8	7	6	5	4	3	2	1	0
Name															SPEED [1:0]	
Type															R/W	
Reset															0	

SPEED UART sample counter base

- **0** based on 16*baud_pulse, baud_rate = system clock frequency/16/{DLH, DLL}
- **1** based on 8*baud_pulse, baud_rate = system clock frequency/8/{DLH, DLL}

MediaTek Confidential Release for Cenon WCX

This document contains information that is proprietary to MediaTek Inc.

Unauthorized reproduction or disclosure of this information in whole or in part is strictly prohibited.

2 based on 4*baud_pulse, baud_rate = system clock frequency/4/{DLH, DLL}

3 based on sampe_count * baud_pulse, baud_rate = system clock frequency / sampe_count / {DLM, DLL}

The table below shows the divisor needed to generate a given baud rate from CLK inputs of 13 MHz based on different HIGHSPEED value.

BAUD	HIGHSPEED = 0	HIGHSPEED = 1	HIGHSPEED = 2
110	7386	14773	29545
300	2708	7386	14773
1200	677	2708	7386
2400	338	677	2708
4800	169	338	677
9600	85	169	338
19200	42	85	169
38400	21	42	85
57600	14	21	42
115200	7	14	21
230400	*	7	14
460800	*	*	7
921600	*	*	*

Table 48 Divisor needed to generate a given baud rate from 13MHz based on different HIGHSPEED value

The table below shows the divisor needed to generate a given baud rate from CLK inputs of 26 MHz based on different HIGHSPEED value.

BAUD	HIGHSPEED = 0	HIGHSPEED = 1	HIGHSPEED = 2
110	14773	29545	59091
300	5417	14773	29545
1200	1354	5417	14773
2400	677	1354	5417
4800	339	677	1354
9600	169	339	667
19200	85	169	339

MediaTek Confidential Release for Cenon WCX
MediaTek Confidential Release for Cenon WCX

This document contains information that is proprietary to MediaTek Inc.

Unauthorized reproduction or disclosure of this information in whole or in part is strictly prohibited.

38400	42	85	169
57600	28	42	85
115200	14	28	42
230400	7	14	28
460800	*	7	14
921600	*	*	7

Table 49 Divisor needed to generate a given baud rate from 26 MHz based on different HIGHSPEED value

The table below shows the divisor needed to generate a given baud rate from CLK inputs of 52MHz based on different HIGHSPEED value.

BAUD	HIGHSPEED = 0	HIGHSPEED = 1	HIGHSPEED = 2
110	29545	59091	118182
300	10833	29545	59091
1200	2708	10833	29545
2400	1354	2708	10833
4800	677	1354	2708
9600	339	677	1354
19200	169	339	677
38400	85	169	339
57600	56	85	169
115200	28	56	85
230400	14	28	56
460800	7	14	28
921600	*	7	14

Table 50
Divisor needed to generate a given baud rate from 52 MHz based on different HIGHSPEED value

MediaTek Confidential Release for Cenon WCX

This document contains information that is proprietary to MediaTek Inc.

Unauthorized reproduction or disclosure of this information in whole or in part is strictly prohibited.

UARTn+0028h SAMPLE_COUNT UARTn_SAMPLE_COUNT

Bit	15	14	13	12	11	10	9	8	7	6	5	4	3	2	1	0
Name									SAMPLECOUNT [7:0]							
Type									R/W							
Reset									0							

When HIGHSPEED=3, the sample_count is the threshold value for UART sample counter (sample_num).

Count from 0 to sample_count.

UARTn+002Ch SAMPLE_POINT UARTn_SAMPLE_POINT

Bit	15	14	13	12	11	10	9	8	7	6	5	4	3	2	1	0
Name									SAMPLEPOINT [7:0]							
Type									R/W							
Reset									Ffh							

When HIGHSPEED=3, UART gets the input data when sample_count=sample_num.

e.g. system clock = 13MHz, 921600 = 13000000 / 14

sample_count = 14 and sample point = 6 (sample the central point to decrease the inaccuracy)

The SAMPLE_POINT is usually (SAMPLE_COUNT-1)/2 and remove the decimal.

UARTn+0030h AUTOBAUD_REG UARTn_AUTOBAUD_REG

Bit	15	14	13	12	11	10	9	8	7	6	5	4	3	2	1	0
Name									BAUD_STAT[3:0]				BAUDRATE[3:0]			
Type									RO				RO			
Reset									0				0			

BAUD_RATE Autobaud baud rate

- **0** 115200
- **1** 57600
- **2** 38400
- **3** 19200
- **4** 9600
- **5** 4800
- **6** 2400
- **7** 1200
- **8** 300
- **9** 110

BAUDSTAT Autobaud format

MediaTek Confidential Release for Cenon WCX

This document contains information that is proprietary to MediaTek Inc.

Unauthorized reproduction or disclosure of this information in whole or in part is strictly prohibited.

MediaTek Confidential Release for Cenon WCX

0 Autobaud is detecting
1 AT_7N1
2 AT_7O1
3 AT_7E1
4 AT_8N1
5 AT_8O1
6 AT_8E1
7 at_7N1
8 at_7E1
9 at_7O1
10 at_8N1
11 at_8E1
12 at_8O1
13 Autobaud detection fails

UARTn+0034h Rate Fix Address UARTn_RATEFIX_AD

Bit	15	14	13	12	11	10	9	8	7	6	5	4	3	2	1	0
Name													RESTRICT	FREQ_SEL	AUTOBAUD_RATE_FIX	RXTE_FIX
Type													R/W	R/W	R/W	R/W
Reset													0	0	0	0

RATE_FIX When you set "rate_fix"(34H[0]), you can transmit and receive data only if
1) the f13m_en is enable and the freq_sel (34H[2]) is set to 1, or
2) the f26m_en is enable and the freq_sel (34H[2]) is set to 0.

AUTOBAUD_RATE_FIX When you set "autobaud_rate_fix"(34H[1]), you can tx/rx the autobaud packet only if
1) the f13m_en is enable and the freq_sel (34H[2]) is set to 1, or
2) the f26m_en is enable and the freq_sel (34H[2]) is set to 0.

FREQ_SEL

0 Select f26m_en for rate_fix and autobaud_rate_fix
1 Select f13m_en for rate_fix and autobaud_rate_fix

RESTRICT The "restrict" (34H[3]) is used to set a more condition for the autobaud fsm starting point

MediaTek Confidential Release for Cenon WCX

This document contains information that is proprietary to MediaTek Inc.

Unauthorized reproduction or disclosure of this information in whole or in part is strictly prohibited.

UARTn+0038h AUTOBAUDSAMPLE — UARTn_AUTOBAUDSAMPLE

Bit	15	14	13	12	11	10	9	8	7	6	5	4	3	2	1	0
Name										AUTOBAUDSAMPLE						
Type										R/W	R/W	R/W	R/W	R/W	R/W	R/W
Reset										dh						

Since the system clock may change, autobaud sample duration should change as system clock changes.
When system clock = 13MHz, autobaudsample = 6; when system clock = 26MHz, autobaudsample = 13.

UARTn+003Ch Guard time added register — UARTn_GUARD

Bit	15	14	13	12	11	10	9	8	7	6	5	4	3	2	1	0
Name												GUARD_EN	GUARD_CNT[3:0]			
Type												R/W	R/W	R/W	R/W	R/W
Reset												0	0	0	0	0

GUARD_CNT Guard interval count value. Guard interval = (1/(system clock / **div_step** / div)) * GUARD_CNT.

GUARD_EN Guard interval add enable signal.

- **0** No guard interval added.
- **1** Add guard interval after stop bit.

UARTn+0040h Escape character register — UARTn_ESCAPE_DAT

Bit	15	14	13	12	11	10	9	8	7	6	5	4	3	2	1	0
Name									ESCAPE_DAT[7:0]							
Type									R/W							
Reset									FFh							

ESCAPE_DAT Escape character added before software flow control data and escape character, i.e. if tx data is xon (31h), with esc_en =1, uart transmits data as esc + CEh (~xon).

UARTn+0044h Escape enable register — UARTn_ESCAPE_EN

Bit	15	14	13	12	11	10	9	8	7	6	5	4	3	2	1	0
Name																ESC_EN
Type																R/W
Reset																0

ESC_EN Add escape character in transmitter and remove escape character in receiver by UART.

- **0** Do not deal with the escape character.

MediaTek Confidential Release for Cenon WCX

This document contains information that is proprietary to MediaTek Inc.

Unauthorized reproduction or disclosure of this information in whole or in part is strictly prohibited.

1 Add escape character in transmitter and remove escape character in receiver.

UARTn+0048h Sleep enable register — UARTn_SLEEP_EN

Bit	15	14	13	12	11	10	9	8	7	6	5	4	3	2	1	0
Name																SELLP_EN
Type																R/W
Reset																0

SLEEP_EN For sleep mode issue

0 Do not deal with sleep mode indicate signal

1 To activate hardware flow control or software control according to software initial setting when chip enters sleep mode. Releasing hardware flow when chip wakes up; but for software control, uart sends xon when awaken and when FIFO does not reach threshold level.

UARTn+004Ch RX Virtual FIFO enable register — UARTn_RXVFF_EN

Bit	15	14	13	12	11	10	9	8	7	6	5	4	3	2	1	0
Name																RXVFF_EN
Type																R/W
Reset																0

RXVFF_EN UART RX Virtual FIFO mechanism enable signal.

0 Disable RX VFIFO mode.

1 Enable RX VFIFO mode. When UART RX virtual mode is enabled, the flow control is based on the DMA threshold, and generates a timeout interrupt for DMA.

UARTn+0050h Rx Trigger Address — UARTn_RXTRI_AD

Bit	15	14	13	12	11	10	9	8	7	6	5	4	3	2	1	0
Name													RXTRIG[3:0]			
Type													R/W			
Reset													0			

RXTRIG When {rtm,rtl}=2'b11, The Rx FIFO threshold will be Rxtrig.

The value is suggested to be less than half of RX FIFO size, which is 24 Bytes.

UARTn+0054h Fractional Divider LSB Address — UARTn_FRACDIV_L

Bit	15	14	13	12	11	10	9	8	7	6	5	4	3	2	1	0

MediaTek Confidential Release for Canon WCX

This document contains information that is proprietary to MediaTek Inc.

Unauthorized reproduction or disclosure of this information in whole or in part is strictly prohibited.

Name									FRACDIV_L							
Type									R/W							
Reset									0	0	0	0	0	0	0	0

FRACDIV_L Add sampling count (+1) from state data7 to data0, in order to contribute fractional divisor.

UARTn+0058h Fractional Divider MSB Address UARTn_FRACDIV_M

Bit	15	14	13	12	11	10	9	8	7	6	5	4	3	2	1	0
Name															FRACDIV_M	
Type															R/W	
Reset															0	0

FRACDIV_M Add sampling count when in state stop to parity, in order to contribute fractional divisor.

UARTn+005Ch FIFO Control Register UARTn_FCR_RD

Bit	15	14	13	12	11	10	9	8	7	6	5	4	3	2	1	0
Name									RFTL1	RFTL0	TFTL1	TFTL0	DMA1	CLRT	CLRR	FIFOE
Type															RO	

Please refer to UARTn_FCR register.

4.7 Real Time Clock

4.7.1 General Description

The Real Time Clock (RTC) module provides time and data information. The clock is based on a 32.768KHz oscillator with an independent power supply. When the mobile handset is powered off, a dedicated regulator supplies the RTC block. If the main battery is not present, a backup supply such as a small mercury cell battery or a large capacitor is used. In addition to providing timing data, an alarm interrupt is generated and can be used to power up the baseband core via the BBWAKEUP pin. Regulator interrupts corresponding to seconds, minutes, hours and days can be generated whenever the time counter value reaches a maximum value (e.g., 59 for seconds and minutes, 23 for hours, etc.). The year span is supported up to 2127. The maximum day-of-month values, which depend on the leap year condition, are stored in the RTC block.

4.7.2 Register Definitions

REGISTER ADDRESS	REGISTER NAME	SYNONYM

MediaTek Confidential Release for Cenon WCX

This document contains information that is proprietary to MediaTek Inc.

Unauthorized reproduction or disclosure of this information in whole or in part is strictly prohibited.

0x810c_0000	Baseband power up	RTC_BBPU
0x810c_0004	RTC IRQ status	RTC_IRQ_STA
0x810c_0008	RTC IRQ enable	RTC_IRQ_EN
0x810c_000C	Counter increment IRQ enable	RTC_CII_EN
0x810c_0010	RTC alarm mask	RTC_AL_MASK
0x810c_0014	RTC seconds time counter register	RTC_TC_SEC
0x810c_0018	RTC minutes time counter register	RTC_TC_MIN
0x810c_001C	RTC hours time counter register	RTC_TC_HOU
0x810c_0020	RTC day-of-month time counter register	RTC_TC_DOM
0x810c_0024	RTC day-of-week time counter register	RTC_TC_DOW
0x810c_0028	RTC month time counter register	RTC_TC_MTH
0x810c_002C	RTC year time counter register	RTC_TC_YEA
0x810c_0030	RTC second alarm setting register	RTC_AL_SEC
0x810c_0034	RTC minute alarm setting register	RTC_AL_MIN
0x810c_0038	RTC hour alarm setting register	RTC_AL_HOU
0x810c_003C	RTC day-of-month alarm setting register	RTC_AL_DOM
0x810c_0040	RTC day-of-week alarm setting register	RTC_AL_DOW
0x810c_0044	RTC month alarm setting register	RTC_AL_MTH
0x810c_0048	RTC year alarm setting register	RTC_AL_YEA
0x810c_004C	XOSC bias current control register	RTC_XOSCCALI
0x810c_0050	RTC_POWERKEY1 register	RTC_POWERKEY1
0x810c_0054	RTC_POWERKEY2 register	RTC_POWERKEY2
0x810c_0058	PDN1	RTC_PDN1
0x810c_005C	PDN2	RTC_PDN2
0x810c_0064	Spare register for specific purpose	RTC_SPAR1
0x810c_0068	Lock / unlock scheme to prevent RTC miswriting	RTC_PROT
0x810c_006c	One-time calibration offset	RTC_DIFF
0x810c_0070	Repeat calibration offset	RTC_CALI
0x810c_0074	Enable the transfers from core to RTC in the queue	RTC_WRTGR

Table 51 RTC Register Map

MediaTek Confidential Release for Cenon WCX

This document contains information that is proprietary to MediaTek Inc.

Unauthorized reproduction or disclosure of this information in whole or in part is strictly prohibited.

0x810c_0000 Baseband power up RTC_BBPU

Bit	15	14	13	12	11	10	9	8	7	6	5	4	3	2	1	0
Name	KEY_BBPU								DBING	CBUSY	RELOAD	CLRPKY	AUTO	BBPU	WRITE_EN	PWREN
Type	WO								RO	RO	WO	WO	R/W	R/W	R/W	R/W

KEY_BBPU A bus write is acceptable only when KEY_BBPU=0x43.

DBING This bit indicates RTC is still de-bouncing.

CBUSY The read/write channels between RTC / Core is busy. This bit indicates high after software program sequence to anyone of RTC data registers and enable the transfer by RTC_WRTGR=1. By the way, it is high after the reset from low to high because RTC reload process.

RELOAD Reload the values from RTC domain to Core domain. Generally speaking, RTC will reload synchronize the data from RTC to core when reset from 0 to 1. This bit can be treated as debug bit.

CLRPKY Clear powerkey1 and powerkey2 at the same time. In some cases, software may clear powerkey1 & powerkey2. The BBWAKEUP depends on the matching specific patterns of powerkey1 and powerkey2. If any one of powerkey1 or powerkey2 or BBPU is cleared, BBWAKEUP goes low immediately. Software can't program the other control bits without power. By program RTC_BBPU with CLRPKY=1 and BBPU=0 condition, RTC can clear powerkey1, powerkey2 and BBPU at the same moment.

AUTO Controls if BBWAKEUP is automatically in the low state when SYSRST# transitions from high to low.

- **0** BBWAKEUP is not automatically in the low state when SYSRST# transitions from high to low.
- **1** BBWAKEUP is automatically in the low state when SYSRST# transitions from high to low.

BBPU Controls the power of PMIC. If powerkey1=A357h and powerkey2=67D2h, PMIC takes on the value programmed by software; otherwise PMIC is low.

- **0** Power down
- **1** Power on

WRITE_EN When WRITE_EN is write 0 by the MCU, the RTC programing interface is disabled immediately (MCU can't program RTC). After the debounce counter is time-out, the interface enabled again (MCU can program RTC). The debounce counter time-out period is decided by RTC_PDN1. Note that the WRITE_EN value read out is meaningless. The hardware only care about the "write-0 action" to WRITE_EN control bit.

When WRITE_EN==0, avoid to "read out RTC_BBPU, AND/OR something and write back", like this -> *RTC_BBPU=*RTC_BBPU|RTC_BBPU_KEY|0x1. This would disable RTC write interface for a while and hard to debug.

PWREN

- **0** RTC alarm has no action on power switch.
- **1** When an RTC alarm occurs, BBPU is set to 1 and the system powers on by RTC alarm wakeup.

MediaTek Confidential Release for Cenon WCX

This document contains information that is proprietary to MediaTek Inc.

Unauthorized reproduction or disclosure of this information in whole or in part is strictly prohibited.

MediaTek Confidential Release for Cenon WCX

0x810c_0004 RTC IRQ status RTC_IRQ_STA

Bit	15	14	13	12	11	10	9	8	7	6	5	4	3	2	1	0
Name															TCSTA	ALSTA
Type															R/C	R/C

ALSTA This register indicates the IRQ status and whether or not the alarm condition has been met.

- **0** No IRQ occurred; the alarm condition has not been met.
- **1** IRQ occurred; the alarm condition has been met.

TCSTA This register indicates the IRQ status and whether or not the tick condition has been met.

- **0** No IRQ occurred; the tick condition has not been met.
- **1** IRQ occurred; the tick condition has been met.

0x810c_0008 RTC IRQ enable RTC_IRQ_EN

Bit	15	14	13	12	11	10	9	8	7	6	5	4	3	2	1	0
Name														ONESHOT	TC_EN	AL_EN
Type														R/W	R/W	R/W

The function is only active when RTC_POWERKEY1 & RTC_POWERKEY2 match the correct values.

ONESHOT Controls automatic reset of AL_EN and TC_EN.

AL_EN This register enables the control bit for IRQ generation if the alarm condition has been met.

- **0** Disable IRQ generations.
- **1** Enable the alarm time match interrupt. Clear the interrupt when ONESHOT is high upon generation of the corresponding IRQ.

TC_EN This register enables the control bit for IRQ generation if the tick condition has been met.

- **0** Disable IRQ generations.
- **1** Enable the tick time match interrupt. Clear the interrupt when ONESHOT is high upon generation of the corresponding IRQ.

0x810c_000C Counter increment IRQ enable RTC_CII_EN

Bit	15	14	13	12	11	10	9	8	7	6	5	4	3	2	1	0
Name							1/8SECCII	1/4SECCII	1/2SECCII	YEACII	MTHCII	DOWCII	DOMCII	HOUCII	MINCII	SECCII
Type							R/W	R/W	R/W	R/W	R/W	R/W	R/W	R/W	R/W	R/W

This register activates or de-activates the IRQ generation when the TC counter reaches its maximum value.

SECCII Set this bit to 1 to activate the IRQ at each second update.

© 2011 MediaTek Inc.

This document contains information that is proprietary to MediaTek Inc.

Unauthorized reproduction or disclosure of this information in whole or in part is strictly prohibited.

MINCII Set the bit to 1 to activate the IRQ at each minute update.
HOUCII Set the bit to 1 to activate the IRQ at each hour update.
DOMCII Set the bit to 1 to activate the IRQ at each day-of-month update.
DOWCII Set the bit to 1 to activate the IRQ at each day-of-week update.
MTHCII Set the bit to 1 to activate the IRQ at each month update.
YEACII Set the bit to 1 to activate the IRQ at each year update.
1/2SECCII Set the bit to 1 to activate the IRQ at each one-half of a second update.
1/4SECCII Set the bit to 1 to activate the IRQ at each one-fourth of a second update.
1/8SECCII Set the bit to 1 to activate the IRQ at each one-eighth of a second update.

0x810c_0010 RTC alarm mask RTC_AL_MASK

Bit	15	14	13	12	11	10	9	8	7	6	5	4	3	2	1	0
Name										YEA_MSK	MTH_MSK	DOW_MSK	DOM_MSK	HOU_MSK	MIN_MSK	SEC_MSK
Type										R/W	R/W	R/W	R/W	R/W	R/W	R/W

The alarm condition for alarm IRQ generation depends on whether or not the corresponding bit in this register is masked. Warning: If you set all bits 1 in RTC_AL_MASK (i.e. RTC_AL_MASK=0x7f) and PWREN=1 in RTC_BBPU, it means alarm comes EVERY SECOND, not disabled.

SEC_MSK

0 Condition (RTC_TC_SEC = RTC_AL_SEC) is checked to generate the alarm signal.
1 Condition (RTC_TC_SEC = RTC_AL_SEC) is masked, i.e. the value of RTC_TC_SEC does not affect the alarm IRQ generation.

MIN_MSK

0 Condition (RTC_TC_MIN = RTC_AL_MIN) is checked to generate the alarm signal.
1 Condition (RTC_TC_MIN = RTC_AL_MIN) is masked, i.e. the value of RTC_TC_MIN does not affect the alarm IRQ generation.

HOU_MSK

0 Condition (RTC_TC_HOU = RTC_AL_HOU) is checked to generate the alarm signal.
1 Condition (RTC_TC_HOU = RTC_AL_HOU) is masked, i.e. the value of RTC_TC_HOU does not affect the alarm IRQ generation.

DOM_MSK

0 Condition (RTC_TC_DOM = RTC_AL_DOM) is checked to generate the alarm signal.
1 Condition (RTC_TC_DOM = RTC_AL_DOM) is masked, i.e. the value of RTC_TC_DOM does not affect the alarm IRQ generation.

DOW_MSK

0 Condition (RTC_TC_DOW = RTC_AL_DOW) is checked to generate the alarm signal.

MediaTek Confidential Release for Cenon WCX

This document contains information that is proprietary to MediaTek Inc.

Unauthorized reproduction or disclosure of this information in whole or in part is strictly prohibited.

1 Condition (RTC_TC_DOW = RTC_AL_DOW) is masked, i.e. the value of RTC_TC_DOW does not affect the alarm IRQ generation.

MTH_MSK

0 Condition (RTC_TC_MTH = RTC_AL_MTH) is checked to generate the alarm signal.

1 Condition (RTC_TC_MTH = RTC_AL_MTH) is masked, i.e. the value of RTC_TC_MTH does not affect the alarm IRQ generation.

YEA_MSK

0 Condition (RTC_TC_YEA = RTC_AL_YEA) is checked to generate the alarm signal.

1 Condition (RTC_TC_YEA = RTC_AL_YEA) is masked, i.e. the value of RTC_TC_YEA does not affect the alarm IRQ generation.

0x810c_0014 RTC seconds time counter register — RTC_TC_SEC

Bit	15	14	13	12	11	10	9	8	7	6	5	4	3	2	1	0
Name											TC_SECOND					
Type											R/W					

TC_SECOND The second initial value for the time counter. The range of its value is: 0-59.

0x810c_0018 RTC minutes time counter register — RTC_TC_MIN

Bit	15	14	13	12	11	10	9	8	7	6	5	4	3	2	1	0
Name											TC_MINUTE					
Type											R/W					

TC_MINUTE The minute initial value for the time counter. The range of its value is: 0-59.

0x810c_001C RTC hours time counter register — RTC_TC_HOU

Bit	15	14	13	12	11	10	9	8	7	6	5	4	3	2	1	0
Name												TC_HOUR				
Type												R/W				

TC_HOUR The hour initial value for the time counter. The range of its value is: 0-23.

0x810c_0020 RTC day-of-month time counter register — RTC_TC_DOM

Bit	15	14	13	12	11	10	9	8	7	6	5	4	3	2	1	0
Name												TC_DOM				
Type												R/W				

MediaTek Confidential Release for Cenon WCX

This document contains information that is proprietary to MediaTek Inc.

Unauthorized reproduction or disclosure of this information in whole or in part is strictly prohibited.

TC_DOM The day-of-month initial value for the time counter. The day-of-month maximum value depends on the leap year condition, i.e. 2 LSB of year time counter are zeros.

0x810c_0024 RTC day-of-week time counter register RTC_TC_DOW

Bit	15	14	13	12	11	10	9	8	7	6	5	4	3	2	1	0
Name														TC_DOW		
Type														R/W		

TC_DOW The day-of-week initial value for the time counter. The range of its value is: 1-7.

0x810c_0028 RTC month time counter register RTC_TC_MTH

Bit	15	14	13	12	11	10	9	8	7	6	5	4	3	2	1	0
Name													TC_MONTH			
Type													R/W			

TC_MONTH The month initial value for the time counter. The range of its value is: 1-12.

0x810c_002C RTC year time counter register RTC_TC_YEA

Bit	15	14	13	12	11	10	9	8	7	6	5	4	3	2	1	0
Name										AL_SECOND						
Type										R/W						

TC_YEAR The year initial value for the time counter. The range of its value is: 0-127. (2000-2127)

0x810c_0030 RTC second alarm setting register RTC_AL_SEC

Bit	15	14	13	12	11	10	9	8	7	6	5	4	3	2	1	0
Name													AL_SECOND			
Type													R/W			

AL_SECOND The second value of the alarm counter setting. The range of its value is: 0-59.

0x810c_0034 RTC minute alarm setting register RTC_AL_MIN

Bit	15	14	13	12	11	10	9	8	7	6	5	4	3	2	1	0
Name													AL_MINUTE			
Type													R/W			

AL_MINUTE The minute value of the alarm counter setting. The range of its value is: 0-59.

MediaTek Confidential Release for Cenon WCX

This document contains information that is proprietary to MediaTek Inc.

Unauthorized reproduction or disclosure of this information in whole or in part is strictly prohibited.

MediaTek Confidential Release for Cenon WCX

0x810c_0038 RTC hour alarm setting register RTC_AL_HOU

Bit	15	14	13	12	11	10	9	8	7	6	5	4	3	2	1	0
Name												AL_HOUR				
Type												R/W				

AL_HOUR The hour value of the alarm counter setting. The range of its value is: 0-23.

0x810c_003C RTC day-of-month alarm setting register RTC_AL_DOM

Bit	15	14	13	12	11	10	9	8	7	6	5	4	3	2	1	0
Name												AL_DOM				
Type												R/W				

AL_DOM The day-of-month value of the alarm counter setting. The day-of-month maximum value depends on the leap year condition, i.e. 2 LSB of year time counter are zeros.

0x810c_0040 RTC day-of-week alarm setting register RTC_AL_DOW

Bit	15	14	13	12	11	10	9	8	7	6	5	4	3	2	1	0
Name														AL_DOW		
Type														R/W		

AL_DOW The day-of-week value of the alarm counter setting. The range of its value is: 1-7.

0x810c_0044 RTC month alarm setting register RTC_AL_MTH

Bit	15	14	13	12	11	10	9	8	7	6	5	4	3	2	1	0
Name													AL_MONTH			
Type													R/W			

AL_MONTH The month value of the alarm counter setting. The range of its value is: 1-12.

0x810c_0048 RTC year alarm setting register RTC_AL_YEA

Bit	15	14	13	12	11	10	9	8	7	6	5	4	3	2	1	0
Name										AL_YEAR						
Type										R/W						

AL_YEAR The year value of the alarm counter setting. The range of its value is: 0-127. (2000-2127)

This document contains information that is proprietary to MediaTek Inc.

Unauthorized reproduction or disclosure of this information in whole or in part is strictly prohibited.

0x810c_004C XOSC bias current control register

RTC_XOSCCALI

Bit	15	14	13	12	11	10	9	8	7	6	5	4	3	2	1	0
Name												XOSCCALI				
Type												WO				

The function is only active when RTC_POWERKEY1 & RTC_POWERKEY2 match the correct values.

XOSCCALI This register controls the XOSC32 bias current.

0x810c_0050 RTC_POWERKEY1 register

RTC_POWERKEY1

Bit	15	14	13	12	11	10	9	8	7	6	5	4	3	2	1	0
Name	RTC_POWERKEY1															
Type	R/W															

0x810c_0054 RTC_POWERKEY2 register

RTC_POWERKEY2

Bit	15	14	13	12	11	10	9	8	7	6	5	4	3	2	1	0
Name	RTC_POWERKEY2															
Type	R/W															

These register sets are used to determine if the real time clock has been programmed by software; i.e. the time value in real time clock is correct. When the real time clock is first powered on, the register contents are all undefined, therefore the time values shown are incorrect. Software needs to know if the real time clock has been programmed. Hence, these two registers are defined to solve this power-on issue. After software programs the correct value, these two register sets do not need to be updated. In addition to programming the correct time value, when the contents of these register sets are wrong, the interrupt is not generated. Therefore, the real time clock does not generate the interrupts before the software programs the registers; unwanted interrupt due to wrong time value do not occur. The correct values of these two register sets are:

RTC_POWERKEY1 A357h
RTC_POWERKEY2 67D2h

0x810c_0058 PDN1

RTC_PDN1

Bit	15	14	13	12	11	10	9	8	7	6	5	4	3	2	1	0
Name									RTC_PDN1[7:0]							
Type									R/W							

MediaTek Confidential Release for Cenon WCX

This document contains information that is proprietary to MediaTek Inc.

Unauthorized reproduction or disclosure of this information in whole or in part is strictly prohibited.

RTC_PDN1[3:1] is for reset de-bounce mechanism. When RTC_POWERKEY1 & RTC_POWERKEY2 do not match the correct values, RTC_PDN1[3:1] is set to 3 (011 in binary).

- **0** 2ms
- **1** 8ms
- **2** 32ms
- **3** 128ms
- **4** 256ms
- **5** 512ms
- **6** 1024ms
- **7** 2048ms

RTC_PDN1[7:4] & RTC_PDN1[0] is the spare register for software to keep power on and power off state information.

0x810c_005C PDN2 RTC_PDN2

Bit	15	14	13	12	11	10	9	8	7	6	5	4	3	2	1	0
Name									RTC_PDN2[7:0]							
Type									R/W							

RTC_PDN2 The spare register for software to keep power on and power off state information.

0x810c_0064 Spare register for specific purpose RTC_SPAR1

Bit	15	14	13	12	11	10	9	8	7	6	5	4	3	2	1	0
Name	RTC_SPAR1															
Type	R/W															

RTC_SPAR1 This register is reserved for specific purpose.

0x810c_0068 Lock / unlock scheme to prevent RTC miswriting RTC_PROT

Bit	15	14	13	12	11	10	9	8	7	6	5	4	3	2	1	0
Name	RTC_PROT															
Type	R/W															

RTC_PROT The RTC write interface is protected by RTC_PROT. Whether the RTC writing interface is enabled or not is decided by RTC_PROT contents. When RTC_POWERKEY1 & RTC_POWERKEY2 are not equal to the correct values, the RTC writing interface is always enabled. But when they match, users have to perform Unlock flow to enable the writing interface.

MediaTek Confidential Release for Cenon WCX

This document contains information that is proprietary to MediaTek Inc.

Unauthorized reproduction or disclosure of this information in whole or in part is strictly prohibited.

Unlock flow: Step1: *RTC_PROT=0x586a;
Step2: *RTC_WRTRG=1;
Step3: while(*RTC_BBPU & 0x40) {}; // Timeout period: 120usec
Step4: *RTC_PROT=0x9136;
Step5: *RTC_WRTRG=1;
Step6: while(*RTC_BBPU & 0x40) {}; // Timeout period: 120usec

Lock flow: Step1: *RTC_PROT=0x0;
Step2: *RTC_WRTRG=1;
Step3: while(*RTC_BBPU & 0x40) {}; // Timeout period: 120usec

Once the normal RTC content writing is complete, it is suggested to perform Lock flow to turn off the interface to avoid accident writing.
The RTC_PROT contents will be corrupt when reset.

0x810c_006c One-time calibration offset RTC_DIFF

Bit	15	14	13	12	11	10	9	8	7	6	5	4	3	2	1	0
Name					RTC_DIFF											
Type					R/W											

The function is only active when RTC_POWERKEY1 & RTC_POWERKEY2 match the correct values.

RTC_DIFF These registers are used to adjust the internal counter of RTC. It effects once and returns to zero in done.

In some cases, you observe the RTC is faster or slower than the standard. To change RTC_TC_SEC is coarse and may cause alarm problem. RTC_DIFF provides a finer time unit. An internal 15-bit counter accumulates in each 32768-HZ clock. Entering a non-zero value into the RTC_DIFF causes the internal RTC counter increases or decreases RTC_DIFF when RTC_DIFF changes to zero again. RTC_DIFF represents as 2's completement form.

For example, if you fill in 0xfff into RTC_DIFF, the internal counter decreases 1 when RTC_DIFF returns to zero. In other words, you can only use RTC_DIFF continuously if RTC_DIFF is equal to zero now.

Note: RTC_DIFF ranges from 0x800 (-2048) to 0x7fd (2045). 0x7ff & 0x7fe are forbid to use.

0x810c_0070 Repeat calibration offset RTC_CALI

Bit	15	14	13	12	11	10	9	8	7	6	5	4	3	2	1	0
Name												RTC_CALI				

MediaTek Confidential Release for Cenon WCX

This document contains information that is proprietary to MediaTek Inc.

Unauthorized reproduction or disclosure of this information in whole or in part is strictly prohibited.

Type										R/W

The function is only active when RTC_POWERKEY1 & RTC_POWERKEY2 match the correct values.

RTC_CALI These registers provide a repeat calibration scheme. RTC_CALI provides 7-bit calibration capability in 8-second duration; in other words, 5-bit calibration capability in each second. RTC_CALI represents in 2's complement form, such that you can adjust RTC increasing or decreasing.

Due to RTC_CALI is revealed in 8 seconds, the resolution is less than a 1/32768 clock.
Avg. resolution: 1/32768/8=3.81us
Avg. adjust range: -0.244~0.240ms/sec in 2's complement: -0x40~0x3f (-64~63)

0x810c_0074 Enable the transfers from core to RTC in the queue RTC_WRTGR

Bit	15	14	13	12	11	10	9	8	7	6	5	4	3	2	1	0
Name																WRTGR
Type																WO

WRTGR This register enables the transfers from core to RTC. After you modify all the RTC registers you'd like to change, you must write RTC_WRTGR to 1 to trigger the transfer. The prior writing operations are queued at core power domain. The pending data will not be transferred to RTC domain until WRTGR=1.
After WRTGR=1, the pending data is transferred to RTC domain sequentially in order of register address, from low to high. For example: RTC_BBPU -> RTC_IRQ_EN -> RTC_CII_EN -> RTC_AL_MASK -> RTC_TC_SEC -> etc. The CBUSY in RTC_BBPU is equal to 1 in writing process. You can observe CBUSY to determine when the transmission completes.

4.8 Auxiliary ADC Unit

The auxiliary ADC unit is used to monitor the status of the battery and charger, to identify the plugged peripheral, and to perform temperature measurement. Seven input channels allow diverse applications in this unit.

MediaTek Confidential Release for Cenon WCX

This document contains information that is proprietary to MediaTek Inc.

Unauthorized reproduction or disclosure of this information in whole or in part is strictly prohibited.

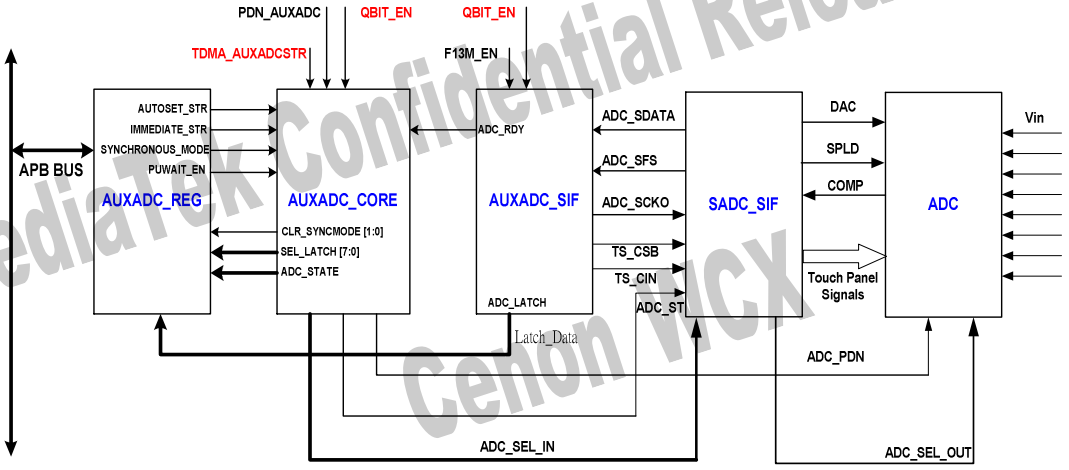

Figure 36 Auxadc Architecture

Each channel can operate in one of two modes: immediate mode and timer-triggered mode. The mode of each channel can be individually selected through register AUXADC_CON0. For example, if the flag SYN0 in the register AUXADC_CON0 is set, the channel 0 is set in timer-triggered mode. Otherwise, the channel operates in immediate mode.

In immediate mode, the A/D converter samples the value once only when the flag in the AUXADC_CON1 register has been set. For example, if the flag IMM0 in AUXADC_CON1 is set, the A/D converter samples the data for channel 0. The IMM flags must be cleared and set again to initialize another sampling.

The value sampled for channel 0 is stored in register AUXADC_DAT0, the value for channel 1 is stored in register AUXADC_DAT1, etc.

If the AUTOSET flag in the register AUXADC_CON3 is set, the auto-sample function is enabled. The A/D converter samples the data for the channel in which the corresponding data register has been read. For example, in the case where the SYN1 flag is not set, the AUTOSET flag is set, when the data register AUXADC_DAT0 has been read, the A/D converter samples the next value for channel 1 immediately.

If multiple channels are selected at the same time, the task is performed sequentially on every selected channel. For example, if AUXADC_CON1 is set to 0x7f, that is, all 7 channels are selected, the state machine in the unit starts sampling from channel 6 to channel 0, and saves the values of each input channel in the respective registers. The same process also applies in timer-triggered mode.

MediaTek Confidential Release for Cenon WCX

This document contains information that is proprietary to MediaTek Inc.

Unauthorized reproduction or disclosure of this information in whole or in part is strictly prohibited.

In timer-triggered mode, the A/D converter samples the value for the channels in which the corresponding SYN flags are set when the TDMA timer counts to the value specified in the register TDMA_AUXEV1, which is placed in the TDMA timer. For example, if AUXADC_CON0 is set to 0x7f, all 7 channels are selected to be in timer-triggered mode. The state machine samples all 7 channels sequentially and save the values in registers from AUXADC_DAT0 to AUXADC_DAT6, as it does in immediate mode.

There is a dedicated timer-triggered scheme for channel 0. This scheme is enabled by setting the SYN7 flag in the register AUXADC_CON2. The timing offset for this event is stored in the register TDMA_AUXEV0 in the TDMA timer. The sampled data triggered by this specific event is stored in the register AUXADC_DAT7. It is used to separate the results of two individual software routines that perform actions on the auxiliary ADC unit.

The AUTOCLR*n* in the register AUXADC_CON3 is set when it is intended to sample only once after setting timer-triggered mode. If AUTOCLR1 flag has been set, after the data for the channels in timer-triggered mode has been stored, the SYN*n* flags in the register AUXADC_CON0 are cleared. If AUTOCLR0 flag has been set, after the data for the channel 0 has been stored in the register AUXADC_DAT7, the SYN7 flag in the register AUXADC_CON2 is cleared.

The usage of the immediate mode and timer-triggered mode are mutually exclusive in terms of individual channels.

The PUWAIT_EN bit in the registers AUXADC_CON3 is used to power up the analog port in advance. This ensures that the power has ramped up to the stable state before A/D converter starts the conversion. The analog part is automatically powered down after the conversion is completed.

There are only two external pins (channel 4~5) for voltage detection. The other channels (0~3) are for battery voltage, battery current, and charger, respectively.

Touch Panel:

MediaTek Confidential Release for Cenon WCX

This document contains information that is proprietary to MediaTek Inc.

Unauthorized reproduction or disclosure of this information in whole or in part is strictly prohibited.

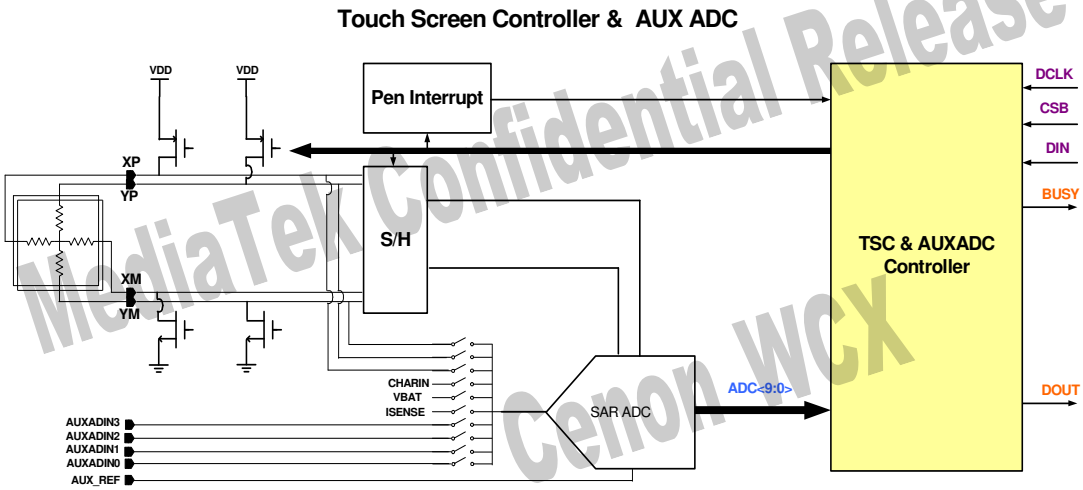

Figure 37 Touch Panel Circuit Structure

Besides the normal sampling of external input voltage, auxadc includes the sampling of the touch panel function. For the specified axis, SW should program **AUX_TS_CMD** first, and then trigger touch panel's sample in the register **AUX_TS_CON**. The touch panel sampling waveform is shown as follows. After SW polls status bit in the register **AUXADC_CON3** to know that the touch panel sample is finished. SW can read back the specified axis value from the register **AUX_TS_DAT0**.

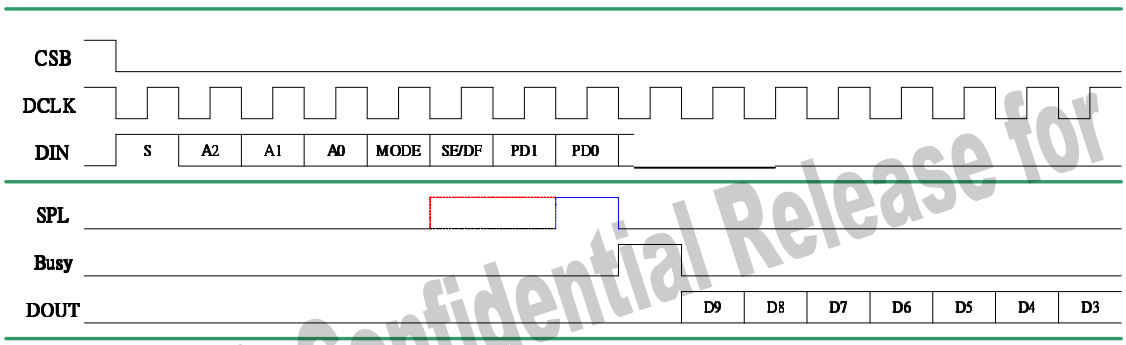

Figure 38 Touch Panel Sampling Waveform

S: Start bit

A2~A0: Addressing bits

Mode: 10bit or 8bit

MediaTek Confidential Release for Cenon WCX

This document contains information that is proprietary to MediaTek Inc.

Unauthorized reproduction or disclosure of this information in whole or in part is strictly prohibited.

SE/DF: Single End or Differential mode

PD1~0: Power Down Command

These values are defined in the register **AUX_TS_CMD**. In the following table, it shows the relationship between AUX_TS_CMD and touch panel control signals.

SE/DFB	A2	A1	A0	X/Y Driver	X/Y Pass	SEL< 3:0 >	NOTE
0	0	0	0	ALL OFF	ALL OFF		TBD
0	0	0	1	X+ / X- off Y+ / Y- on	X+ / X- off Y+ / Y- on	1000	Y Position
0	0	1	0	ALL OFF	ALL OFF	0011	IN3
0	0	1	1	X+ / Y- off Y+ / X- on	X+ / Y- off Y+ / X- on	1000	Z_1 Position
0	1	0	0	X+ / Y- off Y+ / X- on	X+ / Y- off Y+ / X- on	1010	Z_2 Position
0	1	0	1	X+ / X- on Y+ / Y- off	X+ / X- on Y+ / Y- off	1001	X Position
0	1	1	0	ALL OFF	ALL OFF	0100	IN4
0	1	1	1	ALL OFF	ALL OFF		TBD
1	0	0	0	ALL OFF	ALL OFF		TBD
1	0	0	1	X+ / X- off Y+ / Y- on	ALL OFF	1000	Y Position
1	0	1	0	ALL OFF	ALL OFF	0011	IN3
1	0	1	1	X+ / Y- off Y+ / X- on	ALL OFF	1000	Z_1 Position
1	1	0	0	X+ / Y- off Y+ / X- on	ALL OFF	1010	Z_2 Position
1	1	0	1	X+ / X- on Y+ / Y- off	ALL OFF	1001	X Position
1	1	1	0	ALL OFF	ALL OFF	0100	IN4
1	1	1	1	ALL OFF	ALL OFF		TBD

Table 52 Relationship between commands and touch panel control signals

4.8.1 Register Definitions

Register Address	Register Function	Acronym
0x82050000	Auxiliary ADC control register 0	AUXADC_CON0
0x82050004	Auxiliary ADC control register 1	AUXADC_CON1
0x82050008	Auxiliary ADC control register 2	AUXADC_CON2
0x82050010	Auxiliary ADC channel 0 data register	AUXADC_DAT0
0x82050014	Auxiliary ADC channel 1 data register	AUXADC_DAT1
0x82050018	Auxiliary ADC channel 2 data register	AUXADC_DAT2
0x8205001C	Auxiliary ADC channel 3 data register	AUXADC_DAT3

MediaTek Confidential Release for Cenon WCX

This document contains information that is proprietary to MediaTek Inc.

Unauthorized reproduction or disclosure of this information in whole or in part is strictly prohibited.

0x82050020	Auxiliary ADC channel 4 data register	AUXADC_DAT4
0x82050024	Auxiliary ADC channel 5 data register	AUXADC_DAT5
0x82050028	Auxiliary ADC channel 6 data register	AUXADC_DAT6
0x8205002C	Auxiliary ADC channel 0 data register for TDMA event 0	AUXADC_DAT7
0x82050030	Touch Screen Debounce Time	AUX_TS_DEBT
0x82050034	Touch Screen Sample Command	AUX_TS_CMD
0x82050038	Touch Screen Control	AUX_TS_CON

Table 53 Auxadc Registers

MediaTek Confidential Release for Cenon WCX

0x82050000 Auxiliary ADC control register 0 AUXADC_CON0

Bit	15	14	13	12	11	10	9	8	7	6	5	4	3	2	1	0
Name										SYN6	SYN5	SYN4	SYN3	SYN2	SYN1	SYN0
Type										R/W	R/W	R/W	R/W	R/W	R/W	R/W
Reset										0	0	0	0	0	0	0

SYN*n* These 7 bits define whether the corresponding channel is sampled or not in timer-triggered mode. It is associated with timing offset register TDMA_AUXEV1. It supports multiple flags. The flags can be automatically cleared after those channel have been sampled if AUTOCLR1 in the register AUXADC_CON3 is set. To monitor ISENSE and BATSNS, ISENSE_OUT_EN & VBAT_OUT_EN in the register PMIC_CONG (Analog Front End functional spec) must be set to 1 in advanced.

0 The channel is not selected.

1 The channel is selected.

0x82050004 Auxiliary ADC control register 1 AUXADC_CON1

Bit	15	14	13	12	11	10	9	8	7	6	5	4	3	2	1	0
Name										IMM6	IMM5	IMM4	IMM3	IMM2	IMM1	IMM0
Type										R/W	R/W	R/W	R/W	R/W	R/W	R/W
Reset										0	0	0	0	0	0	0

IMM*n* These 7 bits are set individually to sample the data for the corresponding channel. It supports multiple flags.

0 The channel is not selected.

1 The channel is selected.

0x82050008 Auxiliary ADC control register 2 AUXADC_CON2

Bit	15	14	13	12	11	10	9	8	7	6	5	4	3	2	1	0

This document contains information that is proprietary to MediaTek Inc.

Unauthorized reproduction or disclosure of this information in whole or in part is strictly prohibited.

Name															SYN7
Type															R/W
Reset															0

SYN7 This bit is used only for channel 0 and is to be associated with timing offset register TDMA_AUXEV0 in the TDMA timer in timer-triggered mode. The flag can be automatically cleared after channel 0 has been sampled if AUTOCLR0 in the register AUXADC_CON3 is set.

0 The channel is not selected.

1 The channel is selected.

0x8205000C Auxiliary ADC control register 3 AUXADC_CON3

Bit	15	14	13	12	11	10	9	8	7	6	5	4	3	2	1	0
Name	AUTOSET				PUWAIT_EN		AUTOCLR1	AUTOCLR0								STA
Type	R/W				R/W		R/W	R/W								RO
Reset	0				0		0	0								0

AUTOSET This field defines the auto-sample mode of the module. In auto-sample mode, each channel with its sample register being read can start sampling immediately without configuring the control register AUXADC_CON1 again.

PUWAIT_EN Thus field enables the power warm-up period to ensure power stability before the SAR process takes place. It is recommended to activate this field.

0 The mode is not enabled.

1 The mode is enabled.

AUTOCLR1 The field defines the auto-clear mode of the module for event 1. In auto-clear mode, each timer-triggered channel gets samples of the specified channels once the SYN*n* bit in the register AUXADC_CON0 has been set. The SYN*n* bits are automatically cleared and the channel is not enabled again by the timer event except when the SYN*n* flags are set again.

0 The automatic clear mode is not enabled.

1 The automatic clear mode is enabled.

AUTOCLR0 The field defines the auto-clear mode of the module for event 0. In auto-clear mode, the timer-triggered channel 0 gets the sample once the SYN7 bit in the register AUXADC_CON2 has been set. The SYN7 bit is automatically cleared and the channel is not enabled again by the timer event 0 except when the SYN7 flag is set again.

0 The automatic clear mode is not enabled.

1 The automatic clear mode is enabled.

STA The field defines the state of the module.

0 This module is idle.

MediaTek Confidential Release for Cenon WCX

This document contains information that is proprietary to MediaTek Inc.

Unauthorized reproduction or disclosure of this information in whole or in part is strictly prohibited.

1 This module is busy.

0x82050010 Auxiliary ADC channel 0 register AUXADC_DAT0

Bit	15	14	13	12	11	10	9	8	7	6	5	4	3	2	1	0
Name							DAT									
Type							RO									
Reset							0									

The register stores the sampled data for the channel 0. There are 8 registers of the same type for the corresponding channel . The overall register definition is listed in **Table 54**.

Register Address	Register Function	Acronym
0x82050010	Auxiliary ADC channel 0 data register	AUXADC_DAT0
0x82050014	Auxiliary ADC channel 1 data register	AUXADC_DAT1
0x82050018	Auxiliary ADC channel 2 data register	AUXADC_DAT2
0x8205001C	Auxiliary ADC channel 3 data register	AUXADC_DAT3
0x82050020	Auxiliary ADC channel 4 data register	AUXADC_DAT4
0x82050024	Auxiliary ADC channel 5 data register	AUXADC_DAT5
0x82050028	Auxiliary ADC channel 6 data register	AUXADC_DAT6
0x8205002C	Auxiliary ADC channel 0 data register for TDMA event 0	AUXADC_DAT7

Table 54 Auxiliary ADC data register list

0x82050030 Touch Screen Debounce Time AUX_TS_DEBT

Bit	15	14	13	12	11	10	9	8	7	6	5	4	3	2	1	0
Name			DEBOUNCE TIME													
Type			R/W													
Reset			0													

DEBOUNCE TIME While the analog touch screen irq signal is from high to low level, auxadc will issue an interrupt after the debounce time.

0x82050034 Touch Screen Sample Command AUX_TS_CMD

Bit	15	14	13	12	11	10	9	8	7	6	5	4	3	2	1	0
Name										ADDRESS			MODE	SE/DF	PD	
Type										R/W	R/W	R/W	R/W	R/W	R/W	R/W
Reset										0	0	0	0	0	0	0

MediaTek Confidential Release for Cenon WCX

This document contains information that is proprietary to MediaTek Inc.

Unauthorized reproduction or disclosure of this information in whole or in part is strictly prohibited.

ADDRESS Define which x or y or z data will be sampled.

- **001** Y Position
- **011** Z1 Position
- **100** Z2 Position
- **101** X Position
- **Others** Reserved

MODE Select the sample resolution

- **0** 10-bit resolution
- **1** 8-bit resolution

SE/DF Mode selection

- **0** Differential mode
- **1** Single-end mode

PD Power down control for analog IRQ signal and touch screen sample control signal

- **00** Turn on Y-_drive signal and PDN_sh_ref
- **01** Turn on PDN_IRQ and PDN_sh_ref
- **10** Reserved
- **11** Turn on PDN_IRQ

0x82050038 Touch Screen Control AUX_TS_CON

Bit	15	14	13	12	11	10	9	8	7	6	5	4	3	2	1	0
Name															ST	SPL
Type															R	R/W
Reset															0	0

SPL Touch Screen Sample Trigger

- **0** No Action
- **1** While SW writes 1'b1, auxadc will trigger the touch screen process. After the sample process of touch screen finishes, this bit will be disserted.

ST Touch Screen Status

- **0** Touch Screen is idle.
- **1** Touch Screen is touched.

0x8205003C Touch Screen Sample DATA AUX_TS_DAT0

Bit	15	14	13	12	11	10	9	8	7	6	5	4	3	2	1	0
Name							DAT									

MediaTek Confidential Release for Cenon WCX

This document contains information that is proprietary to MediaTek Inc.

Unauthorized reproduction or disclosure of this information in whole or in part is strictly prohibited.

Type							RO
Reset							0

This register stores the touch screen sample data.

4.9 I2C / SCCB Controller

4.9.1 General Description

I2C (Inter-IC) /SCCB (Serial Camera Control Bus) is a two-wire serial interface. The two signals are SCL and SDA. SCL is a clock signal that is driven by the master. SDA is a bi-directional data signal that can be driven by either the master or the slave. This generic controller supports the master role and conforms to the I2C specification.

4.9.1.1 Feature Support

I2C compliant master mode operation

Adjustable clock speed for LS/FS mode operation.

7bit/10 bit addressing support.

High Speed mode support.

Slave Clock Extension support.

START/STOP/REPEATED START condition

Manual/DMA Transfer Mode

Multi write per transfer (up to 8 data bytes for non dma mode and 255 data bytes for dma mode)

Multi read per transfer (up to 8 data bytes for non dma mode and 255 data bytes for dma mode)

Multi transfer per transaction (up to 256 write transfers or 256 read transfers with dma mode)

DMA mode with Fifo Flow Control and bus signal holding

Combined format transfer with length change capability.

Active drive / wired-and I/O configuration

MediaTek Confidential Release for Cenon WCX

This document contains information that is proprietary to MediaTek Inc.

Unauthorized reproduction or disclosure of this information in whole or in part is strictly prohibited.

MediaTek Confidential Release for Cenon WCX

4.9.1.2 Manual/DMA Transfer Mode

The controller offers 2 types of transfer mode, Manual and DMA.

When Manual mode is selected, in addition to the slave address register, the controller has a built-in 8byte deep FIFO which allows mcu to prepare up to 8 bytes of data for a write transfer, or read up to 8 bytes of data for a read transfer.

When DMA mode is enabled, the data to and from the FIFO is controlled via DMA transfer and can therefore support up to 255 bytes of consecutive read or write, with the data read from or write to another memory space. When DMA mode is enabled, flow control mechanism is also implemented to hold the bus clk when FIFO underflow or overflow condition is encountered.

4.9.1.3 Transfer format support

This controller has been designed to be as generic as possible in order to support a wide range of devices that may utilize different combinations of transfer formats. Here are the transfer format types that can be supported through different software configuration:

(Wording convention note:

transfer = anything encapsulated within a Start and Stop or Repeated Start.

transfer length = the number of bytes within the transfer.

transaction = this is the top unit. Everything combined equals 1 transaction.

Transaction length = the number of transfers to be conducted.

)

Master to slave dir

Slave to master dir

Single Byte Access

MediaTek Confidential Release for Cenon WCX

This document contains information that is proprietary to MediaTek Inc.

Unauthorized reproduction or disclosure of this information in whole or in part is strictly prohibited.

Single Byte Write

Single Byte Read

Multi Byte Access

Multi Byte Write

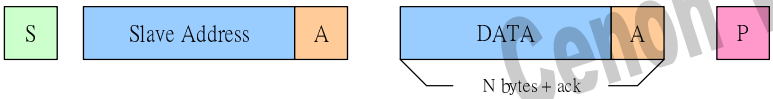

Multi Byte Read

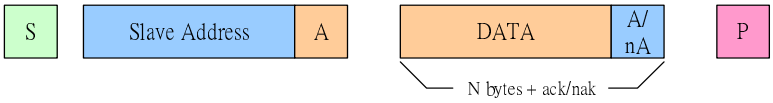

Multi Byte Transfer + Multi Transfer (same direction)

Multi Byte Write + Multi Transfer

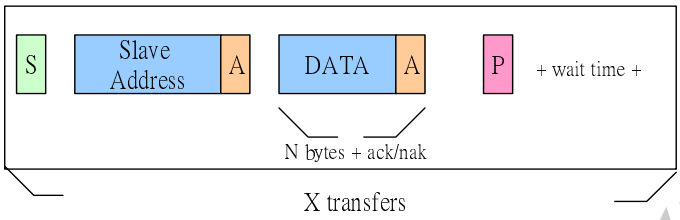

Multi Byte Read + Multi Transfer

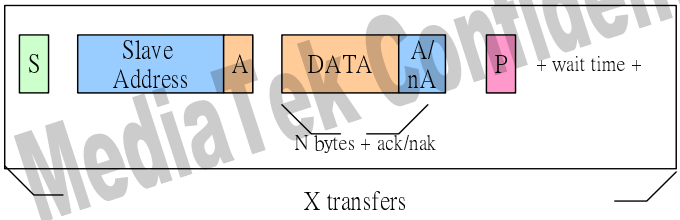

MediaTek Confidential Release for Cenon WCX
MediaTek Confidential Release for Cenon WCX

This document contains information that is proprietary to MediaTek Inc.

Unauthorized reproduction or disclosure of this information in whole or in part is strictly prohibited.

Multi Byte Transfer + Multi Transfer w RS (same direction)

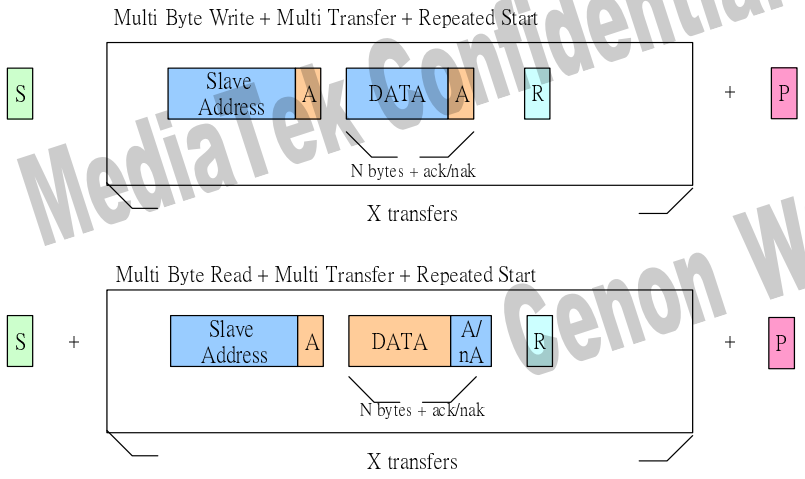

Combined Write/Read with Repeated Start (direction change)

(Note: Only supports Write and then Read sequence. Read and then Write is not supported)

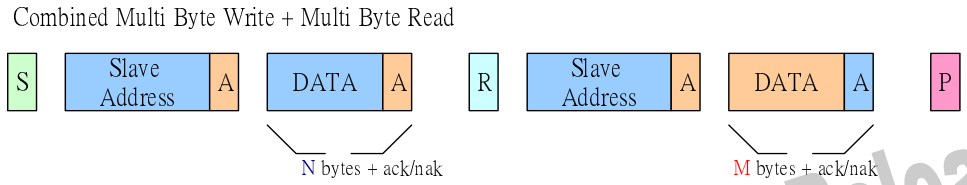

4.9.2 Programming Examples

Common Transfer Programmable Parameters

MediaTek Confidential Release for Cenon WCX

This document contains information that is proprietary to MediaTek Inc.

Unauthorized reproduction or disclosure of this information in whole or in part is strictly prohibited.

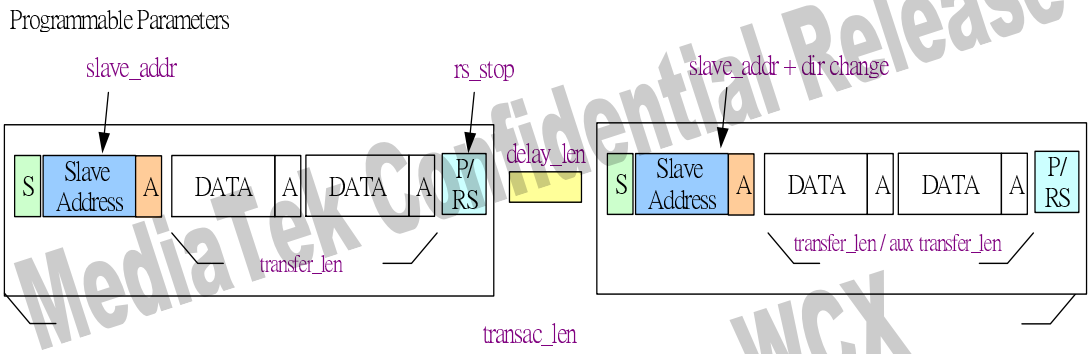

Output Waveform Timing Programmable Parameters

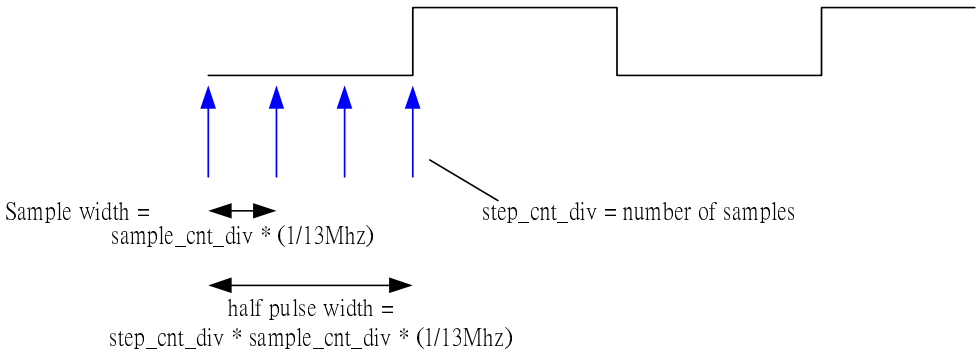

4.9.3 Register Definitions

I2CREG+0000h Data Port Register DATA_PORT

Bit	15	14	13	12	11	10	9	8	7	6	5	4	3	2	1	0
Name									FIFO DATA							
Type									R/W							
Reset									0							

MediaTek Confidential Release for Cenon WCX

This document contains information that is proprietary to MediaTek Inc.

Unauthorized reproduction or disclosure of this information in whole or in part is strictly prohibited.

DATA_PORT[7:0] This is the FIFO access port. During master write sequences (slave_addr[0] = 0), this port can be written by APB, and during master read sequences (slave_addr[0] = 1), this port can be read by APB.

(NOTE) Slave_addr must be set correctly before accessing the fifo.

(DEBUG ONLY) If the fifo_apb_debug bit is set, then the FIFO can be read and write by the APB

I2CREG+0004h Slave Address Register SLAVE_ADDR

Bit	15	14	13	12	11	10	9	8	7	6	5	4	3	2	1	0
Name									SLAVE_ADDR							
Type									R/W							
Reset									0							

SLAVE_ADDR [7:0] This specifies the slave address of the device to be accessed. Bit 0 is defined by the I2C protocol as a bit that indicates the direction of transfer. 1 = master read, 0 = master write.

I2CREG+0008h Interrupt Mask Register INTR_MASK

Bit	15	14	13	12	11	10	9	8	7	6	5	4	3	2	1	0
Name													DEBUG	HS_NACKER	ACKERR	TRANSAC_COMP
Type													R.W	R/W	R/W	R/W
Reset													1	1	1	1

This register provides masks for the corresponding interrupt sources as indicated in intr_stat register.

1 = allow interrupt

0 = disable interrupt

Note: while disabled, the corresponding interrupt will not be asserted, however the intr_stat will still be updated with the status. Ie. mask does not affect intr_stat register values.

I2CREG+000Ch Interrupt Status Register INTR_STAT

Bit	15	14	13	12	11	10	9	8	7	6	5	4	3	2	1	0

MediaTek Confidential Release for Cenon WCX

This document contains information that is proprietary to MediaTek Inc.

Unauthorized reproduction or disclosure of this information in whole or in part is strictly prohibited.

Name													HS_NACKERR	ACKERR	TRANSAC_COMP
Type													W1C	W1C	W1C
Reset													0	0	0

When an interrupt is issued by i2c controller, this register will need to be read by mcu to determine the cause for the interrupt. After this status has been read and appropriate actions are taken, the corresponding interrupt source will need to be write 1 cleared.

HS_NACKERR This status is asserted if hs master code nack error detection is enabled. If enabled, hs master code nack err will cause transaction to end and stop will be issued.

ACKERR This status is asserted if ACK error detection is enabled. If enabled, ackerr will cause transaction to end and stop will be issued.

TRANSAC_COMP This status is asserted when a transaction has completed successfully.

I2CREG+0010h Control Register CONTROL

Bit	15	14	13	12	11	10	9	8	7	6	5	4	3	2	1	0
Name										TRANSFER_LEN_CHANGE	ACKERR_DET_EN	DIR_CHANGE	CLK_EXT_EN	DMA_EN	RS_STOP	
Type										R/W	R/W	RW	RW	RW	RW	R/W
Reset										0	0	0	0	0	0	0

TRANSFER_LEN_CHANGE This options specifies whether or not to change the transfer length after the fist transfer completes. If enabled, the transfers after the first transfer will use the transfer_len_aux parameter.

ACKERR_DET_EN This option enables slave ack error detection. When enabled, if slave ack error is detected, the master shall terminate the transaction by issuing a STOP condition and then asserts ackerr interrupt. Mcu shall handle this case appropriately and then resets the fifo address before reissuing transaction again. If this option is disabled, the controller will ignore slave ack error and keep on scheduled transaction.

MediaTek Confidential Release for Cenon WCX

This document contains information that is proprietary to MediaTek Inc.

Unauthorized reproduction or disclosure of this information in whole or in part is strictly prohibited.

0 disable
1 enable

DIR_CHANGE This option is used for combined transfer format, where the direction of transfer is to be changed from write to read after the FIRST RS condition. Note: when set to 1, the transfers after the direction change will be based on the transfer_len_aux parameter.

0 disable
1 enable

CLK_EXT_EN I2C spec allows slaves to hold the SCL line low if it is not yet ready for further processing. Therefore, if this bit is set to 1, master controller will enter a high wait state until the slave releases the SCL line.

DMA_EN By default, this is disabled, and fifo data shall be manually prepared by mcu. This default setting should be used for transfer sizes of less than 8 data bytes and no multiple transfer is configured. When enabled, dma requests are turned on, and the fifo data should be prepared in memory.

RS_STOP In LS/FS mode, this bit affects multi-transfer transaction only. It controls whether or not REPEATED-START condition is used between transfers. The last ending transfer always ends with a STOP.

In HS mode, this bit must be set to 1.

0 use STOP

1 use REPEATED-START

I2CREG+0014h Transfer Length Register (Number of Bytesper Transfer) TRANSFER_LEN

Bit	15	14	13	12	11	10	9	8	7	6	5	4	3	2	1	0

MediaTek Confidential Release for Cenon WCX

This document contains information that is proprietary to MediaTek Inc.

Unauthorized reproduction or disclosure of this information in whole or in part is strictly prohibited.

Name				TRANSFER_LEN_AUX	TRANSFER_LEN						
Type				R/W							R/W
Reset				'h1							'h1

TRANSFER_LEN_AUX[4:0] This field is valid only when dir_change is set to 1. This indicates the number of DATA BYTES to be transferred in 1 transfer unit (excluding slave address byte) for the transfers following the direction change. I.e., if dir_change =1, then the first write transfer length depends on transfer_len, while the second read transfer length depend on transfer_len_aux. Dir change is always after the first transfer.

(NOTE) The value must be set greater than 1, otherwise no transfer will take place.

TRANSFER_LEN[7:0] This indicates the number of DATA BYTES to be transferred in 1 transfer unit (excluding slave address byte)

(NOTE) The value must be set greater than 1, otherwise no transfer will take place.

I2CREG+0018h Transaction Length Register (Number of Transfers per Transaction) TRANSAC_LEN

Bit	15	14	13	12	11	10	9	8	7	6	5	4	3	2	1	0
Name									TRANSAC_LEN							
Type																R/W
Reset																'h1

TRANSAC_LEN[7:0] This indicates the number of TRANSFERS to be transferred in 1 transaction

(NOTE) The value must be set greater than 1, otherwise no transfer will take place.

I2CREG+001Ch Inter Delay Length Register DELAY_LEN

Bit	15	14	13	12	11	10	9	8	7	6	5	4	3	2	1	0
Name									DELAY_LEN							
Type									R/W							
Reset									'h2							

DELAY_LEN[3:0] This sets the wait delay between consecutive transfers when RS_STOP bit is set to 0. (the unit is same as the half pulse width)

MediaTek Confidential Release for Cenon WCX

This document contains information that is proprietary to MediaTek Inc.

Unauthorized reproduction or disclosure of this information in whole or in part is strictly prohibited.

I2CREG+0020h Timing Control Register TIMING

Bit	15	14	13	12	11	10	9	8	7	6	5	4	3	2	1	0
Name	DATA READ ADJ	DATA_READ_TIME				SAMPLE_CNT_DIV					STEP_CNT_DIV					
Type	R/W	R/W				R/W					R/W					
Reset	'h0	'h1				'h3					'h3					

LS/FS only. This register is used to control the output waveform timing. Each half pulse width (ie. each high or low pulse) is equal to = step_cnt_div * (sample_cnt_div * 1/13Mhz)

SAMPLE_CNT_DIV[2:0] Used for LS/FS only. This adjusts the width of each sample. (sample width = sample_cnt_div * 1/13Mhz)

STEP_CNT_DIV[5:0] This specifies the number of samples per half pulse width (ie. each high or low pulse)

DATA_READ_ADJ When set to 1, data latch in sampling time during master reads are adjusted according to DATA_READ_TIME value. Otherwise, by default, data is latched in at half of the high pulse width point. This value must be set to less or equal to half the high pulse width.

DATA_READ_TIME[2:0] This value is valid only when DATA_READ_ADJ is set to 1. This can be used to adjust so that data is latched in at earlier sampling points (assuming data is settled by then)

I2CREG+0024h Start Register START

Bit	15	14	13	12	11	10	9	8	7	6	5	4	3	2	1	0
Name																START
Type																R/W
Reset																0

START This register starts the transaction on the bus. It is auto deasserted at the end of the transaction.

MediaTek Confidential Release for Cenon WCX

This document contains information that is proprietary to MediaTek Inc.

Unauthorized reproduction or disclosure of this information in whole or in part is strictly prohibited.

I2CREG+0030h Fifo Status Register FIFO_STAT

Bit	15	14	13	12	11	10	9	8	7	6	5	4	3	2	1	0
Name	RD_ADDR				WR_ADDR				FIFO_OFFSET						WR_FULL	RD_EMPTY
Type	RO				RO				RO						RO	RO
Reset	0				0				0				0	0	0	0

RD_ADDR[3:0] The current rd address pointer. (only bit [2:0] has physical meaning)

WR_ADDR[3:0] The current wr address pointer. (only bit [2:0] has physical meaning)

FIFO_OFFSET[3:0] wr_addr[3:0] – rd_addr[3:0]

WR_FULL This indicates that the fifo is full.

RD_EMPTY This indicates that the fifo is empty.

I2CREG+0034h Fifo Thresh Register FIFO_THRESH

Bit	15	14	13	12	11	10	9	8	7	6	5	4	3	2	1	0
Name						TX_TRIG_THRESH								RX_TRIG_THRESH		
Type						RW								R/W		
Reset						‘h7								‘h0		

DEBUG ONLY. By default, these values do not need to be adjusted. Note! for RX, no timeout mechanism is implemented. Therefore, RX_trig_thresh must be left at 0, or there would be data left in the fifo that is not fetched by DMA controller.

TX_TRIG_THRESH[2:0] When tx fifo level is below this value, tx dma request is asserted.

RX_TRIG_THRESH[2:0] When rx fifo level is above this value, rx dma request is asserted.

I2CREG+0038h Fifo Address Clear Register FIFO_ADDR_CLR

Bit	15	14	13	12	11	10	9	8	7	6	5	4	3	2	1	0
Name																FIFO_ADDR_CR
Type																WO
Reset																0

MediaTek Confidential Release for Cenon WCX

This document contains information that is proprietary to MediaTek Inc.

Unauthorized reproduction or disclosure of this information in whole or in part is strictly prohibited.

FIFO_ADDR_CLR When written with a 1'b1, a 1 pulse fifo_addr_clr is generated to clear the fifo address to back to 0.

I2CREG+0040h IO Config Register IO_CONFIG

Bit	15	14	13	12	11	10	9	8	7	6	5	4	3	2	1	0
Name													IDLE_OE_EN	IO SYNC EN	SDA_IO_CONFIG	SCL_IO_CONFIG
Type													R/W	R/W	R/W	R/W
Reset													0	0	0	0

This register is used to configure the I/O for the sda and scl lines to select between normal i/o mode, or open-drain mode to support wired-and bus.

IDLE_OE_EN 0 don't drive bus in idle state

1 drive bus in idle state

IO_SYNC_EN DEBUG ONLY: When set to 1, scl and sda inputs will be first dual synced by bclk_ck. This should not be needed. Only reserved for debugging.

SDA_IO_CONFIG 0 normal tristate io mode

1 open-drain mode

SCL_IO_CONFIG 0 normal tristate io mode

1 open-drain mode

I2CREG+0044h RESERVED DEBUG Register DEBUG

Bit	15	14	13	12	11	10	9	8	7	6	5	4	3	2	1	0
Name																
Type														R/W	R/W	R/W
Reset														0	0	0

NOTE: This register is for DEBUG ONLY. The bits are R/W, do not change the values from the default value.

MediaTek Confidential Release for Cenon WCX

This document contains information that is proprietary to MediaTek Inc.

Unauthorized reproduction or disclosure of this information in whole or in part is strictly prohibited.

I2CREG+0048h High Speed Mode Register HS

Bit	15	14	13	12	11	10	9	8	7	6	5	4	3	2	1	0
Name		HS_SAMPLE_CNT DIV				HS_STEP_CNT_DIV				MASTER_CODE					HS_NACKERR_DET_EN	HS_EN
Type		R/W				R/W				R/W					R/W	R/W
Reset		0				1				0					1	0

This register contains options for supporting high speed operation features

Each HS half pulse width (ie. each high or low pulse) is equal to = step_cnt_div * (sample_cnt_div * 1/13Mhz)

HS_SAMPLE_CNT_DIV[2:0] When high speed mode is entered after the master code transfer has been completed, the sample width becomes dependent on this parameter.

HS_STEP_CNT_DIV[2:0] When high speed mode is entered after the master code transfer has been completed, the number of samples per half pulse width becomes dependent on this value.

MASTER_CODE[2:0] This is the 3 bit programmable value for the master code to be transmitted.

HS_NACKERR_DET_EN This enables NACKERR detection during the master code transmission. When enabled, if NACK is not received after master code has been transmitted, the transaction will terminated with a STOP condition.

HS_EN This enables the high speed transaction. (note: rs_stop must be set to 1 as well)

I2CREG+0050h Soft Reset Register SOFTRESET

Bit	15	14	13	12	11	10	9	8	7	6	5	4	3	2	1	0
Name																SOFT_RESET
Type																WO
Reset																0

SOFT_RESET When written with a 1'b1, a 1 pulse soft reset is used as synchronous reset to reset the I2C internal hardware circuits.

MediaTek Confidential Release for Cenon WCX

This document contains information that is proprietary to MediaTek Inc.

Unauthorized reproduction or disclosure of this information in whole or in part is strictly prohibited.

MediaTek Confidential Release for Cenon WCX

I2CREG+0064h Debug Status Register DEBUGSTAT

Bit	15	14	13	12	11	10	9	8	7	6	5	4	3	2	1	0
Name										BUS_BUSY	MASTER_WRITE	MASTER_READ	MASTER_STATE			
Type										RO	RO	RO	RO			
Reset										0	1	0	0			

BUS_BUSY DEBUG ONLY: valid when bus_detect_en is 1. bus_busy = 1 indicates a start transaction has been detected and no stop condition has been detected yet.

MASTER_WRITE DEBUG ONLY: 1 = current transfer is in the master write dir

MASTER_READ DEBUG ONLY: 1 = current transfer is in the master read dir

MASTER_STATE[3:0] DEBUG ONLY: reads back the current master_state.

0: idle state;

1: i2c master is preparing sending out the start bit, SCL=1, SDA=1;

2: i2c master is sending out the start bit, SCL=1, SDA=0;

3: i2c master/slave is preparing transmitting data bit, SCL=0, SDA=data bit (data bit can be changed when SCL=0);

4: i2c master/slave is transmitting data bit, SCL=1, SDA=data bit (data bit is stable when SCL=1);

5: i2c master/slave is preparing transmitting ack bit, SCL=0, SDA=ack (ack bit can be changed when SCL=0);

6: i2c master/slave is transmitting ack bit, SCL=1, SDA=0 (ack bit is stable when SCL=1);

7: i2c master is preparing sending out stop bit or repeated-start bit, SCL=0, SDA=0/1 (0: means stop bit; 1: means repeated-start bit);

8: i2c master is sending out stop bit or repeated-start bit, SCL=1, SDA=1/0 (1: means stop bit; 0: means repeated-start bit);

9: i2c master is in delay start between two transfers, SCL=1, SDA=1;

10: i2c master is in fifo wait state; For writing transaction, it means fifo is empty and i2c master is waiting for dma controller writing data into fifo; For reading transaction, it

This document contains information that is proprietary to MediaTek Inc.

Unauthorized reproduction or disclosure of this information in whole or in part is strictly prohibited.

means fifo is full and i2c master is waiting for dma controller reading data from fifo, SCL=0, SDA=don't care;

12: i2c master is preparing sending out data bit of master code. This state is used only in high-speed transaction, SCL=0, SDA=data bit of master code (data bit of master code can be changed when SCL=0);

13: i2c master is sending out data bit of master code. This state is used only in high-speed transaction, SCL=1, SDA=data bit of master code (data bit of master code is stable when SCL=1);

14: i2c master/slave is preparing transmitting nack bit, SCL=0, SDA=nack bit (nack bit can be changed when SCL=0); This state is used only in high-speed transaction;

15: i2c master/slave is transmitting nack bit, SCL=1, SDA=1; This state is used only in high-speed transaction;

I2CREG+0068h Debug Control Register DEBUGCTRL

Bit	15	14	13	12	11	10	9	8	7	6	5	4	3	2	1	0
Name															APB_DEBUG_RD	FIFO_APB_DEBUG
Type															WO	R/W
Reset															0	0

APB_DEBUG_RD This bit is only valid when fifo_apb_debug is set to 1. Writing to this register will generate a 1 pulsed fifo apb rd signal for reading the fifo data.

FIFO_APB_DEBUG This is used for trace32 debug purposes. When using trace32, and the memory map is shown, turning this bit on will block the normal apb read access. Apb read access to the fifo is then enabled by writing to apb_debug_rd.

0 disable
1 enable

MediaTek Confidential Release for Cenon WCX

This document contains information that is proprietary to MediaTek Inc.

Unauthorized reproduction or disclosure of this information in whole or in part is strictly prohibited.

4.10 USB Device Controller

4.10.1 General Description

This chip provides a USB function interface that is in compliance with Universal Serial Bus Specification Rev 1.1. The USB device controller supports only full-speed (12Mbps) operation. The Bluetooth chip can make use of this widely available USB interfaces to transmit/receive data with USB hosts, typically PC/laptop.

There provides 6 endpoints in the USB device controller besides the mandatory control endpoint, where among them, 4 endpoints are for IN transactions and 2 endpoints are for OUT transactions. Word, half-word, and byte access are all allowed for loading and unloading the FIFO. The controller features 4 DMA channels to accelerate the data transfer for ACL and SCO data streams. The features of the endpoints are as follows:

1. Endpoint 0: The control endpoint feature 64 bytes FIFO and accommodates maximum packet size of up to 64 bytes. DMA transfer is not supported.
2. IN endpoint 1: It features 64 bytes FIFO and accommodates maximum packet size of up to 64 bytes. GDMA Channel 4 Write Transfer is supported.
3. IN endpoint 2: It features 64 bytes FIFO and accommodates maximum packet size of up to 64 bytes. GDMA Channel 6 Write Transfer is supported.
4. IN endpoint 3: It features 16-byte FIFO and accommodates maximum packet size of 16 bytes. GDMA Transfer is not supported.
5. IN endpoint 4: It features 16-byte FIFO and accommodates maximum packet size of 16 bytes. GDMA Transfer is not supported.
6. OUT endpoint 1: It features 64 bytes FIFO and accommodates maximum packet size of 64 bytes. GDMA Channel 5 Read Transfer is supported.
7. OUT endpoint 2: It features 64 bytes FIFO and accommodates maximum packet size of 64 bytes. GDMA Channel 7 Read Transfer is supported.

For each endpoint except the control endpoint, when the packet size is smaller than half the size of the FIFO, at most 2 packets can be buffered.

This unit is highly software configurable. All endpoints except the control endpoint can be configured to be a bulk, interrupt or isochronous endpoints. Composite device is also supported. The IN endpoint 1 and the OUT endpoint 1 shares the same endpoint number but they can be use separately. So is the situation as the endpoint 2

MediaTek Confidential Release for Cenon WCX

This document contains information that is proprietary to MediaTek Inc.

Unauthorized reproduction or disclosure of this information in whole or in part is strictly prohibited.

The USB device uses cable-powered feature for the transceiver but only drains little current. An internal pull-up resistor has been integrated across Vbus and D+ signal. The switch on/off of the pull-up resistor can configured through the internal register. Two additional external serial resistors might be needed to place on the output of D+ and D- signals to make the output impedance equivalent to 28~44Ohm.

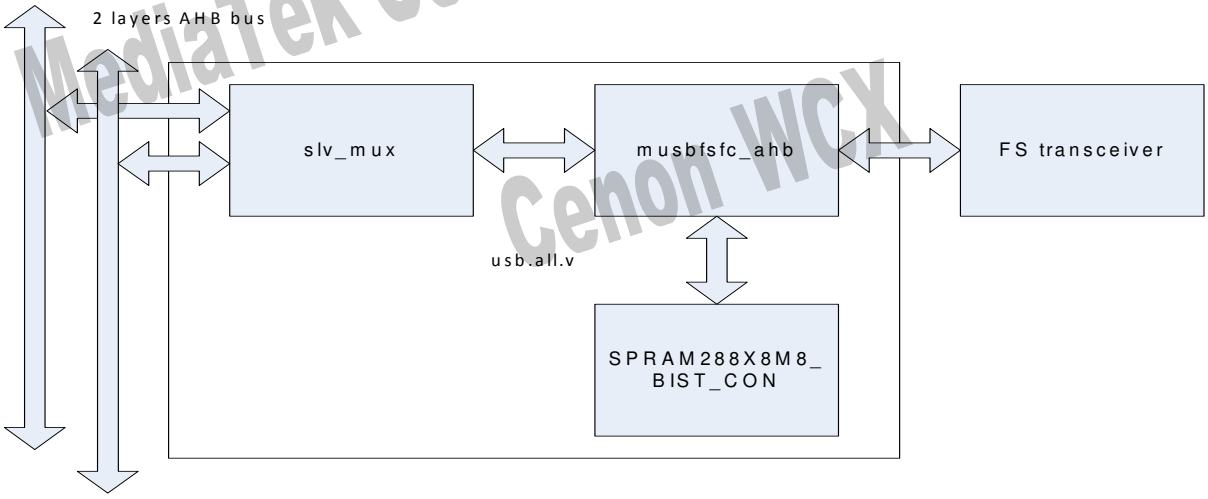

Figure1. USB11 controller system diagram 1

4.10.2 Register Definitions

USB+0000h USB function address register USB_FADDR

Bit	7	6	5	4	3	2	1	0
Name	UPD	FADDR						
Type	RO	R/W						
Reset	0	0						

This is an 8-bit register that should be written with the function's 7-bit address (received through a SET_ADDRESS description). It is then used for decoding the function address in subsequent token packets.

UPD Set when FADDR is written. It's cleared when the new address takes effect (at the end of the current transfer).
FADDR The function address of the device.

MediaTek Confidential Release for Cenon WCX

This document contains information that is proprietary to MediaTek Inc.

Unauthorized reproduction or disclosure of this information in whole or in part is strictly prohibited.

MediaTek Confidential Release for Cenon WCX

USB+0001h USB power control register USB_POWER

Bit	7	6	5	4	3	2	1	0
Name	ISO_UP			SWRSTENAB	RESET	RESUME	SUSPMODE	SUSPENAB
Type	R/W			R/W	RO	R/W	RO	R/W
Reset	0			0	0	0	0	0

ISO_UP When set by the MCU, the core will wait for an SOF token from the time INPKTRDY is set before sending the packet.

SWRSTENAB Set by the MCU to enable the mode in which the device can only be reset by the software after detecting reset signals on the bus. In case the software is delayed by other high-priority process and can't make it to read the command from the buffer before the hardware reset the device after detecting the reset signal on the bus, the command will be lost. That's why the software-reset mode is effective. When the flag is enabled, the hardware state machine can't reset by itself, but rather can be reset by the software. In that sense, the software and the hardware can keep synchronous on detecting the reset signal.

RESET The read-only bit is set when **Reset** signaling is present on the bus.

RESUME Set by the MCU to generate **Resume** signaling when the function is in suspend mode. The MCU should clear this bit after 10 ms (a maximum of 15 ms) to end Resume signaling.

SUSPMODE Set by the USB core when **Suspend** mode is entered. It is cleared when sets the Resume bit of this register.

SUSPENAB Set by the MCU to enable device into **Suspend** mode when Suspend signaling is received on the bus.

USB+0002h USB IN endpoints interrupt register USB_INTRIN

Bit	7	6	5	4	3	2	1	0
Name				EP4	EP3	EP2	EP1	EP0
Type				RC	RC	RC	RC	RC
Reset				0	0	0	0	0

This is a read-only register that indicates which of the interrupts for IN endpoints 0 to 4 are currently active. It must set be setting after USB_INTRINE has been set .All active interrupts will be cleared when this register is read.

EP4 IN endpoint #4 interrupt.

EP3 IN endpoint #3 interrupt.

EP2 IN endpoint #2 interrupt.

EP1 IN endpoint #1 interrupt.

EP0 IN endpoint #0 interrupt.

USB+0004h USB OUT endpoints interrupt register USB_INTROUT

Bit	7	6	5	4	3	2	1	0
Name						EP2	EP1	

This document contains information that is proprietary to MediaTek Inc.

Unauthorized reproduction or disclosure of this information in whole or in part is strictly prohibited.

Type						RC	RC	
Reset						0	0	

This is a read-only register that indicates which of the interrupts for OUT endpoints 1, and 2 are currently active. It must set be setting after USB_INTROUTE has been set. All active interrupts will be cleared when this register is read.

EP2 OUT endpoint #2 interrupt.

EP1 OUT endpoint #1 interrupt.

USB+0006h USB general interrupt register USB_INTRUSB

Bit	7	6	5	4	3	2	1	0
Name					**SOF**	**RESET**	**RESUME**	**SUSP**
Type					RC	RC	RC	RC
Reset					0	0	0	0

This is a read-only register that indicates which USB interrupts are currently active. It must set be setting after USB_INTRUSBE has been set. All active interrupts will be cleared when this register is read.

SOF Set at the start of each frame.

RESET Set when **Reset** signaling is detected on the bus.

RESUME Set when Resume signaling is detected on the bus while the USB core is in suspend mode.

SUSP Set when Suspend signaling is detected on the bus.

USB+0007h USB IN endpoints interrupt enable register USB_INTRINE

Bit	7	6	5	4	3	2	1	0
Name				**EP4**	**EP3**	**EP2**	**EP1**	**EP0**
Type				R/W	R/W	R/W	R/W	R/W
Reset				1	1	1	1	1

This register provides interrupt enable bits for the interrupts in USB_INTRIN. On reset, the bits corresponding to endpoint 0 and all IN endpoints are set to 1.

EP4 IN endpoint 4 interrupt enable.

EP3 IN endpoint 3 interrupt enable.

EP2 IN endpoint 2 interrupt enable.

EP1 IN endpoint 1 interrupt enable.

EP0 IN endpoint 0 interrupt enable.

USB+0009h USB OUT endpoints interrupt enable register USB_INTROUTE

Bit	7	6	5	4	3	2	1	0
Name						**EP2**	**EP1**	
Type						R/W	R/W	

MediaTek Confidential Release for Cenon WCX

This document contains information that is proprietary to MediaTek Inc.

Unauthorized reproduction or disclosure of this information in whole or in part is strictly prohibited.

Reset						1	1	

This register provides interrupt enable bits for the interrupts in USB_INTROUT. On reset, the bits corresponding to all OUT endpoints are set to 1.

EP2 OUT endpoint 2 interrupt enable.
EP1 OUT endpoint 1 interrupt enable.

USB+000Bh USB general interrupt enable register USB_INTRUSBE

Bit	7	6	5	4	3	2	1	0
Name					SOF	RESET	RESUME	SUSP
Type					R/W	R/W	R/W	R/W
Reset					0	1	1	0

This register provides interrupt enable bits for each of the interrupts for USB_INTRUSB.

SOF SOF interrupt enable
RESET Reset interrupt enable
RESUME Resume interrupt enable
SUSP Suspend interrupt enable

USB+000Ch USB frame count #1 register USB_FRAME1

Bit	7	6	5	4	3	2	1	0
Name	NUML							
Type	RO							
Reset	0							

The register holds the lower 8 bits of the last received frame number.

NUML The lower 8 bits of the frame number.

USB+000Dh USB frame count #2 register USB_FRAME2

Bit	7	6	5	4	3	2	1	0
Name						NUMH		
Type						RO		
Reset						0		

The register holds the upper 3 bits of the last received frame number.

NUMH The upper 3 bits of the frame number.

MediaTek Confidential Release for Cenon WCX

This document contains information that is proprietary to MediaTek Inc.

Unauthorized reproduction or disclosure of this information in whole or in part is strictly prohibited.

USB+000Eh USB endpoint register index USB_INDEX

Bit	7	6	5	4	3	2	1	0
Name					INDEX			
Type					R/W			
Reset					0			

The register determines which endpoint control/status registers are to be accessed at addresses USB+10h to USB+17h. Each IN endpoint and each OUT endpoint have their own set of control/status registers. Only one set of IN control/status and one set of OUT control/status registers appear in the memory map at any one time. Before accessing an endpoint's control/status registers, the endpoint number should be written to the USB_INDEX register to ensure that the correct control/status registers appear in the memory map.

INDEX The index of the endpoint.

USB+000Fh USB reset control USB_RSTCTRL

Bit	7	6	5	4	3	2	1	0
Name	SWRST				RSTCNTR			
Type	R/W				R/W			
Reset	0				0			

The register is used to control the reset process when the device detects the reset command issued from the host.

SWRST If the flag SWRSTENAB in the register USB_POWER is set to be 1, the software enable mode is enabled, and the device can be reset by writing this flag to be 1.

RSTCNTR The field signifies the duration for the reset operation to take place after detecting reset signal on the bus. It's only enabled when software reset is not enabled. If the value is equal to zero, the duration is 2.5us. Otherwise, the duration is equal to this value multiplied by 341 and then added by 2.5 in unit of us. The range consequently starts from 2.5us to 5122.5 us.

USB+0011h USB control/status register for endpoint 0 USB_EP0_CSR

Bit	7	6	5	4	3	2	1	0
Name	SSETUPEND	SOUTPKTRDY	SENDSTALL	SETUPEND	DATAEND	SENTSTALL	INPKTRDY	OUTPKTRDY
Type	R/WS	R/WS	R/WS	RO	R/WS	R/WC	R/WS	RO
Reset	0	0	0	0	0	0	0	0

The register is used for all control/status of endpoint 0. The register is active when USB_INDEX register is set to 0.

SSETUPEND The MCU writes a 1 to this bit to clear the SETUPEND bit. It's cleared automatically. Only active when a transaction has been started.

MediaTek Confidential Release for Cenon WCX

This document contains information that is proprietary to MediaTek Inc.

Unauthorized reproduction or disclosure of this information in whole or in part is strictly prohibited.

SOUTPKTRDY The MCU writes a 1 to this bit to clear the OUTPKTRDY bit. It's cleared automatically. Only active when an OUT transaction has been started.

SENDSTALL The MCU writes a 1 to this bit to terminate the current transaction. The STALL handshake will be transmitted and then this bit will be cleared automatically.

SETUPEND This bit will be set when a control transaction ends before the DATAEND bit has been set. An interrupt will be generated and FIFO flushed at this time. The bit is cleared by the MCU writing a 1 to the SSETUPEND bit.

DATAEND The MCU sets this bit:

1. When setting INPKTRDY for the last data packet.
2. When clearing OUTPKTRDY after unloading the last data packet.
3. When setting INPKTRDY for a zero length data packet.

It's cleared automatically

SENTSTALL This bit is set when a STALL handshake is transmitted. The MCU should clear this bit by writing a 0.

INPKTRDY The MCU sets this bit after loading a data packet into the FIFO. It is cleared automatically when the data packet has been transmitted. An interrupt is generated when this bit is set.

OUTPKTRDY This bit is set when a data packet has been received. An interrupt is generated when this bit is set. The MCU clears this bit by setting the SOUTPKTRDY bit.

USB+0016h USB byte count register USB_EP0_COUNT

Bit	7	6	5	4	3	2	1	0
Name		COUNT						
Type		RO						
Reset		0						

The register indicates the number of received data bytes in the endpoint 0. The value returned is valid while OUTPKTRDY bit of USB_EP0_CSR register is set. The register is active when USB_INDEX register is set to 0.

COUNT The number of received data bytes in the endpoint 0.

USB+0010h USB maximum packet size register for IN endpoint 1~4 USB_EP_INMAXP

Bit	7	6	5	4	3	2	1	0
Name	MAXP							
Type	R/W							
Reset	0							

MediaTek Confidential Release for Cenon WCX

This document contains information that is proprietary to MediaTek Inc.

Unauthorized reproduction or disclosure of this information in whole or in part is strictly prohibited.

The register holds the maximum packet size for transactions through the currently selected IN endpoint – in units of one byte. In setting the value, the programmer should note the constraints placed by the USB Specification on packet size for bulk interrupt, and isochronous transactions in full-speed operations. There is an INMAXP register for each IN endpoint except endpoint 0. The registers are active when USB_INDEX register is set to 1, 2, 3, and 4 respectively.

The value written to this register should match the ***wMaxPacketSize*** field of the standard endpoint descriptor for the associated endpoint. A mismatch could cause unexpected results. If a value greater than the configured IN FIFO size for the endpoint is written to the register, the value will be automatically changed to the IN FIFO size. If the value written to the register is less than, or equal to, half the IN FIFO size, two IN packets can be buffered. The configured IN FIFO size for the endpoint 1, 2, and 3, are 16 bytes, 64 bytes, and 64 bytes, respectively.

The register is reset to 0. If the register is changed after packets have been sent from the endpoint, the endpoint IN FIFO should be completely flushed after writing the new value to the register.

MAXP The maximum packet size in units of one byte.

USB+0011h USB control/status register #1 for IN endpoint 1~4 USB_EP_INCSR1

Bit	7	6	5	4	3	2	1	0
Name	ABORTPKT_EN	CLRDATATOG	SENTSTALL	SENDSTALL	FLUSHFIFO	UNDERRUN	FIFONOTEMPTY	INPKTRDY
Type	R/W	WO	R/WC	R/W	WO	R/WC	RO	R/WS
Reset	0	0	0	0	0	0	0	0

The register provides control and status bits for IN transactions through the currently selected endpoint. There is an INCSR1 register for each IN endpoint except endpoint 0. The registers are active when USB_INDEX register is set to 1, 2, and 3, respectively.

ABORTPKT_EN When MCU write ABORTPKT_EN as 1, FLUSHFIFO switch to abort packet function. This bit should be enabled before FLUSHFIFO is set. If FLUSHFIFO is set and ABORTPKT_EN is enabled the data loaded into FIFO will be discarded. After aborting packet, EP will issue an interrupt. Programmer should wait for this interrupt to make sure the packet is aborted.

CLRDATATOG The MCU writes a 1 to this bit to reset the endpoint IN data toggle to 0.

SENTSTALL The bit is set when a STALL handshake is transmitted. The FIFO is flushed and the INPKTRDY bit is cleared. The MCU should clear this bit by writing a 0 to this bit.

SENDSTALL The MCU writes a 1 to this bit to issue a STALL handshake to an IN token. The MCU clears this bit to terminate the stall condition.

FLUSHFIFO The MCU writes a 1 to this bit to flush the next packet to be transmitted from the endpoint IN FIFO. The FIFO pointer is reset and the INPKTRDY bit is cleared. If the FIFO contains two packets,

MediaTek Confidential Release for Cenon WCX

This document contains information that is proprietary to MediaTek Inc.

Unauthorized reproduction or disclosure of this information in whole or in part is strictly prohibited.

FLUSHFIFO will need to be set twice to completely clear the FIFO. FLUSHFIFO should only be used when INPKTRDY is set. At other times, it may cause data to be corrupted.
If ABORTPKT_EN is enabled and this bit is set , the function of this bit becomes ABORTPKT to abort the next packet to be transmitted from the endpoint IN FIFO and doesn't need to set INPKTRDY. The same with FLUSHFIFO function, this bit is only active when endpoint is idle.

UNDERRUN In isochronous mode, this bit is set when a zero length data packet is sent after receiving an IN token with the INPKTRDY bit not set. In Bulk/Interrupt mode, this bit is set when a NAK is returned in response to an IN token. The MCU should clear this bit by writing a 0 to this bit.

FIFONOTEMPTY This bit is set when there is at least 1 packet in the IN FIFO.

INPKTRDY The MCU sets this bit after loading a data packet into the FIFO. Only active when an IN transaction has been started. It is cleared automatically when a data packet has been transmitted. An interrupt is generated (if enabled) when the bit is cleared.

USB+0012h USB control/status register #2 for IN endpoint 1~4 USB_EP_INCSR2

Bit	7	6	5	4	3	2	1	0
Name	AUTOSET	ISO	MODE	DMAENAB	RFCDATATOG			
Type	R/W	R/W	R/W	R/W	R/W			
Reset	0	0	0	0	0			

The register provides further control bits for IN transactions through the currently selected endpoint. There is an INCSR2 register for each IN endpoint except endpoint 0. The registers are active when USB_INDEX register is set to 1, 2, and 3, respectively.

AUTOSET If the MCU sets the bit, INPKTRDY will be automatically set when data of the maximum packet size (value in INMAXP) is loaded into the IN FIFO. If a packet of less than the maximum packet size is loaded, then INPKTRDY will have to be set manually. When 2 packets are in the IN FIFO then INPKTRDY will also be automatically set when the first packet has been sent, if the second packet is the maximum packet size.

ISO The MCU sets this bit to enable the IN endpoint for isochronous transfer, and clears it to enable the IN endpoint for bulk/interrupt transfers.

MODE The MCU sets this bit to enable the endpoint direction as IN, and clears it to enable the endpoint direction as OUT. It's valid only where the same endpoint FIFO is used for both IN and OUT transaction.

DMAENAB The MCU sets this bit to enable the DMA request for the IN endpoint.

MediaTek Confidential Release for Cenon WCX

This document contains information that is proprietary to MediaTek Inc.

Unauthorized reproduction or disclosure of this information in whole or in part is strictly prohibited.

FRCDATATOG The MCU sets this bit to force the endpoint's IN data toggle to switch after each data packet is sent regardless of whether an ACK was received. This can be used by interrupt IN endpoints which are used to communicate rate feedback for isochronous endpoints.

USB+0013h USB maximum packet size register for OUT endpoint 1~2 USB_EP_OUTMAXP

Bit	7	6	5	4	3	2	1	0
Name	MAXP							
Type	R/W							
Reset	0							

This register holds the maximum packet size for transactions through the currently selected OUT endpoint – in units of one byte. In setting this value, the programmer should note the constraints placed by the USB specification on packet sizes for bulk, interrupt, and isochronous transactions in full speed operations. There is an OUTMAXP register for each OUT endpoint except endpoint 0. The registers are active when USB_INDEX register is set to 1 and 2 respectively.

The value written to this register should match the ***wMaxPacketSize*** field of the standard endpoint descriptor for the associated endpoint. A mismatch could cause unexpected results. The total amount of data represented by the value written to this register must not exceed the FIFO size for the OUT endpoint, and should not exceed half the FIFO size if double buffering is required. If a value greater than the configured OUT FIFO size for the endpoint is written to the register, the value will be automatically changed to the OUT FIFO size. If the value written to the register is less than, or equal to, half the OUT FIFO size, two OUT packets can be buffered. The configured IN FIFO size for the endpoint 1, 2, and 3 are both 16, 64, and 64 bytes, respectively.

MAXP The maximum packet size in units of one byte.

USB+0014h USB control/status register #1 for OUT endpoint 1~2 USB_EP_OUTCSR1

Bit	7	6	5	4	3	2	1	0
Name	CLRDATATOG	SENTSTALL	SENDSTALL	FLUSHFIFO	DATAERROR	OVERRUN	FIFOFULL	OUTPKTRDY
Type	WO	R/WC	R/W	WO	RO	R/WC	RO	R/WC
Reset	0	0	0	0	0	0	0	0

The register provides control status bits for OUT transactions through the currently selected endpoint. The registers are active when USB_INDEX register is set to 1 and 2 respectively.

CLRDATATOG The MCU writes a 1 to this bit to reset the endpoint data toggle to 0.

SENTSTALL The bit is set when a STALL handshake is transmitted. The MCU should clear this bit by writing a 0.

MediaTek Confidential Release for Cenon WCX

This document contains information that is proprietary to MediaTek Inc.

Unauthorized reproduction or disclosure of this information in whole or in part is strictly prohibited.

SENDSTALL The MCU writes a 1 to this bit to issue a STALL handshake. The MCU clears this bit to terminate the stall condition. This bit has no effect if the OUT endpoint is in isochronous mode.

FLUSHFIFO The MCU writes a 1 to this bit to flush the next packet to be read from the endpoint OUT FIFO. If the FIFO contains two packets, FLUSHFIFO will need to be set twice to completely clear the FIFO. FLUSHFIFO should only be used when OUTPKTRDY is set. At other times, it may cause data to be corrupted.

DATAERROR The bit is set when OUTPKTRDY is set if the data packet has a CRC or bit-stuff error. It is cleared when OUTPKTRDY is cleared. This bit is only valid in isochronous mode.

OVERRUN The bit is set if an OUT packet cannot be loaded into the OUT FIFO. The MCU should clear the bit by writing a zero. This bit is only valid in isochronous mode.

FIFOFULL This bit is set when no more packets can be loaded into the OUT FIFO.

OUTPKTRDY The bit is set when a data packet has been received. The MCU should clear (write a 0 to) the bit when the packet has been unloaded from the OUT FIFO. An interrupt is generated when the bit is set. When receiving null packet , OUTPKTRDY has been set after USB_INTROUT[1] is high.

USB+0015h USB control/status register #2 for OUT endpoint 1~2 USB_EP_OUTCSR2

Bit	7	6	5	4	3	2	1	0
Name	AUTOCLEAR	ISO	DMAENAB	DMAMODE				
Type	R/W	R/W	R/W	R/W				
Reset	0	0	0	0				

The register provides further control bits for OUT transactions through the currently selected endpoint. The registers are active when USB_INDEX register is set to 1 and 2 respectively.

AUTOCLEAR If the MCU sets this bit then the OUTPKTRDY bit will be automatically cleared when a packet of OUTMAXP bytes has been unloaded from the OUT FIFO. When packets of less then the maximum packet size are unloaded, OUTPKTRDY will have to be cleared manually.

ISO The MCU sets this bit to enable the OUT endpoint for isochronous transfers, and clears it to enable the OUT endpoint for bulk/interrupt transfers.

DMAENAB The MCU sets this bit to enable the DMA request for the OUT endpoint.

DMAMODE Two modes of DMA operation are supported: DMA mode 0 in which a DMA request is generated for all received packets, together with an interrupt (if enabled); and DMA mode 1 in which a DMA request (but no interrupt) is generated for OUT packets of size OUTMAXP bytes and an interrupt (but no DMA request) is generated for OUT packets of any other size. The MCU sets the bit to select DMA mode 1 and clears this bit to select DMA mode 0.

MediaTek Confidential Release for Cenon WCX

This document contains information that is proprietary to MediaTek Inc.

Unauthorized reproduction or disclosure of this information in whole or in part is strictly prohibited.

USB+0016h USB OUT endpoint byte counter register LSB part for endpoint 1~2 USB_EP_COUNT1

Bit	7	6	5	4	3	2	1	0
Name	NUML							
Type	RO							
Reset	0							

The register holds the lower 8 bits of the number of received data bytes in the packet in the FIFO associated with the currently selected OUT endpoint. The value returned is valid while OUTPKTRDY in the register USB_OUTCSR1 is set. The registers are active when USB_INDEX register is set to 1 and 2 respectively.

NUML The lower 8 bits of the number of received data bytes for the OUT endpoint.

USB+0017h USB OUT endpoint byte counter register MSB part for endpoint 1~2 USB_EP_COUNT2

Bit	7	6	5	4	3	2	1	0
Name						NUMH		
Type						RO		
Reset						0		

The register holds the upper 3 bits of the number of received data bytes in the packet in the FIFO associated with the currently selected OUT endpoint. The value returned is valid while OUTPKTRDY in the register USB_EP_OUTCSR1 is set. The registers are active when USB_INDEX register is set to 1 and 2 respectively.

NUMH The upper 8 bits of the number of received data bytes for the OUT endpoint.

USB+0020h USB endpoint 0 FIFO access register USB_EP0_FIFO

Bit	31	30	29	28	27	26	25	24	23	22	21	20	19	18	17	16
Name	DB3								DB2							
Type	R/W								R/W							
Bit	15	14	13	12	11	10	9	8	7	6	5	4	3	2	1	0
Name	DB1								DB0							
Type	R/W								R/W							

The register provides MCU access to the FIFO for the endpoint 0. Writing to this register loads data into the FIFO for the endpoint 0. Reading from this register unloads data from the FIFO for the endpoint 0.

The register provides word, half-word, and byte mode access. If word or half-word accesses are performed, the less significant byte corresponds to the prior byte to load in or unload from the FIFO.

DB0 The first byte to be loaded into or unloaded from the FIFO.
DB1 The second byte to be loaded into or unloaded from the FIFO.

MediaTek Confidential Release for Cenon WCX

This document contains information that is proprietary to MediaTek Inc.

Unauthorized reproduction or disclosure of this information in whole or in part is strictly prohibited.

DB2 The third byte to be loaded into or unloaded from the FIFO.
DB3 The forth byte to be loaded into or unloaded from the FIFO.

USB+0024h USB endpoint 1 FIFO access register USB_EP1_FIFO

Bit	31	30	29	28	27	26	25	24	23	22	21	20	19	18	17	16
Name	DB3								DB2							
Type	R/W								R/W							
Bit	15	14	13	12	11	10	9	8	7	6	5	4	3	2	1	0
Name	DB1								DB0							
Type	R/W								R/W							

The register provides MCU access to the IN FIFO and the OUT FIFO for the endpoint 1. Writing to the register loads data into the IN FIFO for the endpoint 1. Reading from the register unloads data from the OUT FIFO for the endpoint 1.

The register provides word, half-word, and byte mode access. If word or half-word accesses are performed, the less significant byte corresponds to the prior byte to load in the IN FIFO or unload from the OUT FIFO.

DB0 The first byte to be loaded in the IN FIFO or unloaded from the OUT FIFO.
DB1 The second byte to be loaded in the IN FIFO or unloaded from the OUT FIFO.
DB2 The third byte to be loaded in the IN FIFO or unloaded from the OUT FIFO.
DB3 The forth byte to be loaded in the IN FIFO or unloaded from the OUT FIFO.

USB+0028h USB endpoint 2 FIFO access register USB_EP2_FIFO

Bit	31	30	29	28	27	26	25	24	23	22	21	20	19	18	17	16
Name	DB3								DB2							
Type	R/W								R/W							
Bit	15	14	13	12	11	10	9	8	7	6	5	4	3	2	1	0
Name	DB1								DB0							
Type	R/W								R/W							

The register provides MCU access to the IN FIFO and the OUT FIFO for the endpoint 2. Writing to the register loads data into the IN FIFO for the endpoint 2. Reading from the register unloads data from the OUT FIFO for the endpoint 2.

The register provides word, half-word, and byte mode access. If word or half-word accesses are performed, the less significant byte corresponds to the prior byte to load in the IN FIFO or unload from the OUT FIFO.

DB0 The first byte to be loaded into the IN FIFO or unloaded from the OUT FIFO.
DB1 The second byte to be loaded into the IN FIFO or unloaded from the OUT FIFO.
DB2 The third byte to be loaded into the IN FIFO or unloaded from the OUT FIFO.
DB3 The forth byte to be loaded into the IN FIFO or unloaded from the OUT FIFO.

USB+002Ch USB endpoint 3 FIFO access register USB_EP3_FIFO

Bit	31	30	29	28	27	26	25	24	23	22	21	20	19	18	17	16

MediaTek Confidential Release for Cenon WCX

This document contains information that is proprietary to MediaTek Inc.

Unauthorized reproduction or disclosure of this information in whole or in part is strictly prohibited.

Name	DB3								DB2							
Type	R/W								R/W							
Bit	15	14	13	12	11	10	9	8	7	6	5	4	3	2	1	0
Name	DB1								DB0							
Type	R/W								R/W							

The register provides MCU access to the IN FIFO and the OUT FIFO for the endpoint 3. Writing to the register loads data into the IN FIFO for the endpoint 3. Reading from the register unloads data from the OUT FIFO for the endpoint 3.

The register provides word, half-word, and byte mode access. If word or half-word accesses are performed, the less significant byte corresponds to the prior byte to load in the IN FIFO or unload from the OUT FIFO.

DB0 The first byte to be loaded into the IN FIFO or unloaded from the OUT FIFO.

DB1 The second byte to be loaded into the IN FIFO or unloaded from the OUT FIFO.

DB2 The third byte to be loaded into the IN FIFO or unload from the OUT FIFO.

DB3 The forth byte to be loaded into the IN FIFO or unload from the OUT FIFO.

USB+0240h USB PHY control USB_CON

Bit	15	14	13	12	11	10	9	8	7	6	5	4	3	2	1	0
Name											NULL PKT_ FIX				DMPU LLUP	DPPU LLUP
Type											R/W				R/W	R/W
Reset											1	0	0	0	0	0

DPPULLUP Pull-up enable pin. Enable the pull up 1.5KOhm pull up on D+ pin as a full speed device by setting it to high

DMPULLUP Pull-up enable pin. Enable the pull up 1.5KOhm pull up on D- pin as a full speed device by setting it to high

NULLPKT_FIX If NULLPKT_FIX is setting as “1”, USB controller will not issue a DMAreq when receive a null packet.

.

4.10.3 System integration guide

4.10.3.1 USB device configuration

The target audience of this section is the software engineer.

The USB device controller features one control endpoint and 6 other endpoints. The configuration of interfaces and endpoints can be accommodated by software for specific functions, basically supporting Bluetooth HCI, and device firmware upgrade.

MediaTek Confidential Release for Cenon WCX

This document contains information that is proprietary to MediaTek Inc.

Unauthorized reproduction or disclosure of this information in whole or in part is strictly prohibited.

Bluetooth HCI transport layer defines the configuration of endpoints and interfaces.

✓ One voice channel with 16-bit encoding.

Endpoint	Endpoint type	Maximum packet size (Bytes)	Maximum bandwidth (Bytes/ms)	Minimum bandwidth (Bytes/ms)	Double buffer in controller	Generic DMA
Endpoint 0 (command)	Control	64			No	No
Endpoint 1 IN	Bulk (IN)	64		1024	No	Yes
Endpoint 2 OUT	Bulk (OUT)	64		1024	No	Yes
Endpoint 2 IN	Bulk (IN)	64	1024		No	Yes
Endpoint 2 OUT	Bulk (OUT)	64	1024		No	Yes
Endpoint 3 IN	Interrupt (IN)	16		16	No	No
Endpoint 4 IN	Interrupt (IN)	16		16	No	No

*When the maximum packet size is less than one half of the device FIFO size (64 Bytes), the double buffer will be automatically enabled by hardware

The pull-up resister on USB transceiver is initially disconnected when boot-up. No external resistor is required. Software should enable it after performing the configuration of USB device controller.

4.10.3.2 System infrastructure configuration

The clock, interrupt, and DMA are defined as the system infrastructure. It requires several steps to bring up USB. Those steps should be done in sequence to prevent from malfunction.

Power on:

1. Enable USB PLL.
2. Enable USB clock after USB PLL is settled.
3. Unmask the USB interrupt in the interrupt controller.
4. Enable the pull-up resistor.

USB device controller can generate the interrupt when conditions are met as defined in USB_INTRINE, USB_INTROUTE, and USB_INTRUSBE.

The generic DMA controller is used to move data from or to the USB device controller. The USB device controller will use at most 4 DMA channels for ACL and SCO. The user should use half channel DMA since only the half channel DMA has the hardware flow control.

MediaTek Confidential Release for Cenon WCX

This document contains information that is proprietary to MediaTek Inc.

Unauthorized reproduction or disclosure of this information in whole or in part is strictly prohibited.

The USB FIFO provides byte and word accesses to the read/write port of USB_EP0_FIFO, USB_EP1_FIFO, USB_EP2_FIFO, USB_EP3_FIFO, and USB_EP4_FIFO. If the data buffer allocated in memory is word aligned, the user can enable word transfer in DMA controller. If the data buffer allocated in memory is not word aligned, the user should set to byte aligned and set B2W in DMAx_CON to 1 to enable fast byte-to-word transfer. Please refer to DMA section foe more detail.

4.10.3.3 Power on/off USB PHY and Controller Sequence

1 Power on sequence after plug-in.

- 1.1 Turn on Vusb(PHY 3.3v power) – the control register is in PMIC document.
- 1.2 Turn on USB AHB clock(78MHz) – the control register is in config document.
- 1.3 Turn on internal 48MHz PLL – the control register is in clock document.
- 1.4 Wait 50 usec. (PHY 3.3v power stable time)
- 1.5 Turn on USB PHY BIAS Current control → reg[USB+08C1h] bit3 = 1. (RG_USB11_FSLS_ENBGRI).
- 1.6 Wait 10 usec.
- 1.7 Setting D+ pull up register for connecting Host → reg[USB+0240h] bit 0 =1(PUB)

2 Power off sequence after plug-out.

- 2.1 Release D+ pull up register for disconnecting Host → Setting reg[USB+0240h] bit 0 =0 (PUB)
- 2.2 Turn off USB PHY BIAS Current control → reg[USB+08C1h] bit3 = 0. (RG_USB11_FSLS_ENBGRI).
- 2.3 Turn off Vusb(PHY 3.3v power) – the control register is in PMIC document

4.11 SD/MMC Memory Card Controller

4.11.1 Introduction

The controller fully supports the SD Memory Card bus protocol as defined in SD Memory Card Specification Part 1 Physical Layer Specification version 2.0 as well as the MultiMediaCard (MMC) bus protocol as defined in MMC system specification version 4.1. Since SD Memory Card bus protocol is backward compatible to MMC bus protocol, the

MediaTek Confidential Release for Cenon WCX

This document contains information that is proprietary to MediaTek Inc.

Unauthorized reproduction or disclosure of this information in whole or in part is strictly prohibited.

controller is capable of working well as the host on MMC bus under control of proper firmware. Hereafter, the controller is also abbreviated as SD/MMC controller. The following are the main features of the controller.

- Interface with MCU by APB bus
- 16/32-bit access on APB bus
- 16/32-bit access for control registers
- 32-bit access for FIFO
- Shared pins for Memory Stick and SD/MMC Memory Card
- Built-in 32 bytes FIFO buffers for transmit and receive, FIFO is shared for transmit and receive
- Built-in CRC circuit
- CRC generation can be disabled
- DMA supported
- Interrupt capabilities
- Automatic command execution capability when an interrupt from Memory Stick
- Data rate up to 26 Mbps in serial mode, 26x4 Mbps (26x8 Mbps if 8-bit data line for SD/MMC card is configured) in parallel model, the module is targeted at 26 MHz operating clock
- Serial clock rate on SD/MMC bus is programmable
- Card detection capabilities during sleep mode
- Controllability of power for memory card
- Not support SPI mode for SD/MMC Memory Card
- Not support multiple SD Memory Cards

4.11.2 Overview

4.11.2.1 Pin Assignment

Since the controller can only be configured as either the host of Memory Stick or the host of SD/MMC Memory Card at one time, pins for Memory Stick and SD/MMC Memory Card are shared in order to save pin counts. The following lists pins required for Memory Stick and SD/MMC Memory Card. **Table 55** shows how they are shared. In **Table 55**, all I/O pads have embedded both pull up and pull down resistor because they are shared by both the Memory Stick and SD/MMC Memory Card. Pins 2,4,5,8 are only useful for SD/MMC Memory Card. Pull down resistor for these pins can

MediaTek Confidential Release for Cenon WCX

This document contains information that is proprietary to MediaTek Inc.

Unauthorized reproduction or disclosure of this information in whole or in part is strictly prohibited.

be used for power saving. All embedded pull-up and pull-down resistors can be disabled by programming the corresponding control registers if optimal pull-up or pull-down resistors are required on the system board. The pin VDDPD is used for power saving. Power for Memory Stick or SD/MMC Memory Card can be shut down by programming the corresponding control register. The pin WP (Write Protection) is only valid when the controller is configured for SD/MMC Memory Card. It is used to detect the status of Write Protection Switch on SD/MMC Memory Card.

No.	Name	Type	MMC	SD	MS	MSPRO	Description
1	SD_CLK	O	CLK	CLK	SCLK	SCLK	Clock
2	SD_DAT3	I/O/PP		CD/DAT3		DAT3	Data Line [Bit 3]
3	SD_DAT0	I/O/PP	DAT0	DAT0	SDIO	DAT0	Data Line [Bit 0]
4	SD_DAT1	I/O/PP		DAT1		DAT1	Data Line [Bit 1]
5	SD_DAT2	I/O/PP		DAT2		DAT2	Data Line [Bit 2]
6	SD_CMD	I/O/PP	CMD	CMD	BS	BS	Command Or Bus State
7	SD_PWRON	O					VDD ON/OFF
8	SD_WP	I					Write Protection Switch in SD
9	SD_INS	I	VSS2	VSS2	INS	INS	Card Detection

Table 55 Sharing of pins for Memory Stick and SD/MMC Memory Card Controller

4.11.2.2 Card Detection

For Memory Stick, the host or connector should provide a pull up resistor on the signal INS. Therefore, the signal INS will be logic high if no Memory Stick is on line. The scenario of card detection for Memory Stick is shown in **Figure 39**. Before Memory Stick is inserted or powered on, on host side SW1 shall be closed and SW2 shall be opened for card detection. It is the default setting when the controller is powered on. Upon insertion of Memory Stick, the signal INS will have a transition from high to low. Hereafter, if Memory Stick is removed then the signal INS will return to logic high. If card insertion is intended to not be supported, SW1 shall be opened and SW2 closed always.

For SD/MMC Memory Card, detection of card insertion/removal by hardware is also supported. Because a pull down resistor with about 470 KΩ resistance which is impractical to embed in an I/O pad is needed on the signal CD/DAT3, and it has to be capable of being connected or disconnected dynamically onto the signal CD during initialization period, an additional I/O pad is needed to switch on/off the pull down resistor on the system board. The scenario of card detection for SD/MMC Memory Card is shown in **Figure 40**. Before SD/MMC Memory Card is inserted or powered on, SW1 and SW2 shall be opened for card detection on the host side. Meanwhile, pull down resistor R_{CD} on system board shall attach onto the signal CD/DAT3 by the output signal RCDEN. In addition, SW3 on the card is default to be closed. Upon insertion of SD/MMC Memory Card, the signal CD/DAT3 will have a transition from low to high. If SD/MMC Memory Card is removed then the signal CD/DAT3 will return to logic low. After the card identification process, pull down resistor R_{CD} on system board shall disconnect with the signal CD/DAT3 and SW3 on the card shall be opened for normal operation.

MediaTek Confidential Release for Cenon WCX

This document contains information that is proprietary to MediaTek Inc.

Unauthorized reproduction or disclosure of this information in whole or in part is strictly prohibited.

Since the scheme above needs a mechanical switch such as a relay on system board, it is not ideal enough. Thus, a dedicated pin "INS" is used to perform card insertion and removal for SD/MMC. The pin "INS" will connect to the pin "VSS2" of a SD/MMC connector. It is shown in **Figure 39**.

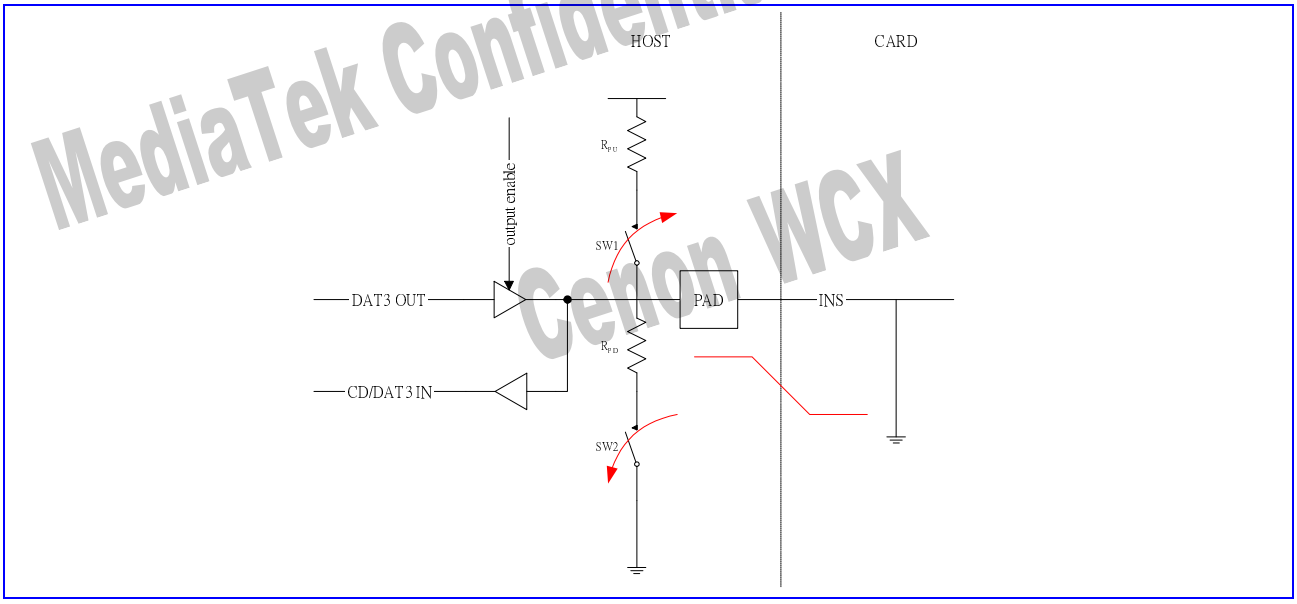

Figure 39 Card detection for Memory Stick

MediaTek Confidential Release for Cenon WCX

This document contains information that is proprietary to MediaTek Inc.

Unauthorized reproduction or disclosure of this information in whole or in part is strictly prohibited.

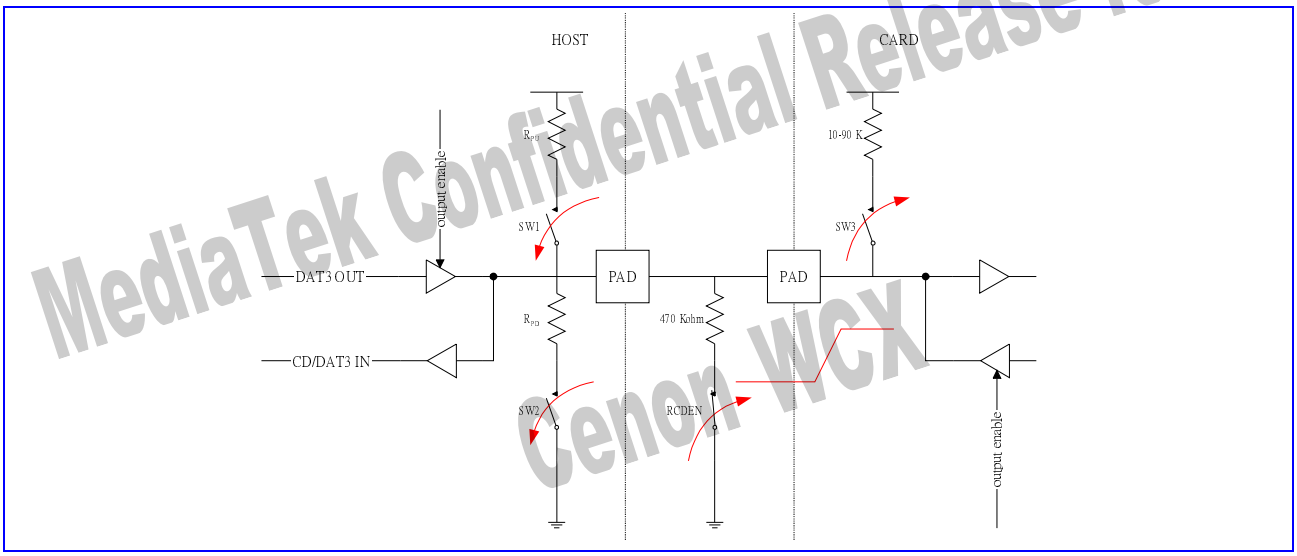

Figure 40 Card detection for SD/MMC Memory Card

MediaTek Confidential Release for Cenon WCX

This document contains information that is proprietary to MediaTek Inc.

Unauthorized reproduction or disclosure of this information in whole or in part is strictly prohibited.

MediaTek Confidential Release for Canon WCX

4.11.3 Register Definitions

For MT6252, MSDC base address is 0x81110000.

REGISTER ADDRESS	REGISTER NAME	SYNONYM
MSDC + 0000h	MS/SD Memory Card Controller Configuration Register	MSDC_CFG
MSDC + 0004h	MS/SD Memory Card Controller Status Register	MSDC_STA
MSDC + 0008h	MS/SD Memory Card Controller Interrupt Register	MSDC_INT
MSDC + 000Ch	MS/SD Memory Card Controller Data Register	MSDC_DAT
MSDC + 00010h	MS/SD Memory Card Pin Status Register	MSDC_PS
MSDC + 00014h	MS/SD Memory Card Controller IO Control Register	MSDC_IOCON
MSDC + 0020h	SD Memory Card Controller Configuration Register	SDC_CFG
MSDC + 0024h	SD Memory Card Controller Command Register	SDC_CMD
MSDC + 0028h	SD Memory Card Controller Argument Register	SDC_ARG
MSDC + 002Ch	SD Memory Card Controller Status Register	SDC_STA
MSDC + 0030h	SD Memory Card Controller Response Register 0	SDC_RESP0
MSDC + 0034h	SD Memory Card Controller Response Register 1	SDC_RESP1
MSDC + 0038h	SD Memory Card Controller Response Register 2	SDC_RESP2
MSDC + 003Ch	SD Memory Card Controller Response Register 3	SDC_RESP3
MSDC + 0040h	SD Memory Card Controller Command Status Register	SDC_CMDSTA
MSDC + 0044h	SD Memory Card Controller Data Status Register	SDC_DATSTA
MSDC + 0048h	SD Memory Card Status Register	SDC_CSTA
MSDC + 004Ch	SD Memory Card IRQ Mask Register 0	SDC_IRQMASK0
MSDC + 0050h	SD Memory Card IRQ Mask Register 1	SDC_IRQMASK1
MSDC + 0054h	SDIO Configuration Register	SDIO_CFG
MSDC + 0058h	SDIO Status Register	SDIO_STA

Table 56 MS/SD Controller Register Map

4.11.3.1 Global Register Definitions

MSDC+0000h **MS/SD Memory Card Controller Configuration Register** **MSDC_CFG**

Bit	31	30	29	28	27	26	25	24	23	22	21	20	19	18	17	16

This document contains information that is proprietary to MediaTek Inc.

Unauthorized reproduction or disclosure of this information in whole or in part is strictly prohibited.

Name	FIFOTHD				PRCFG2		PRCFG1		PRCFG0		VDDPD	RCDEN	DIRQEN	PINEN	DMAEN	INTEN
Type	R/W				R/W		R/W		R/W		R/W	R/W	R/W	R/W	R/W	R/W
Reset	0001				01		01		10		0	0	0	0	0	0
Bit	15	14	13	12	11	10	9	8	7	6	5	4	3	2	1	0
Name	SCLKF								SCLKON	CRED	STDBY	CLKSRC	RST	NOCRC		MSDC
Type	R/W								R/W	R/W	R/W	R/W	W	R/W		R/W
Reset	00000000								0	0	1	0	0	0		0

The register is for general configuration of the MS/SD controller. Note that MSDC_CFG[31:16] can be accessed by 16-bit APB bus access.

MSDC The register bit is used to configure the controller as SD/MMC Memory card mode. CLK/CMD/DAT line is pull low when SD/MMC memory card mode is disable..

- **0** SD/MMC Memory card disable.
- **1** SD/MMC Memory card enable.

NOCRC CRC Disable. A '1' indicates that data transfer without CRC is desired. For write data block, data will be transmitted without CRC. For read data block, CRC will not be checked. It is for testing purpose.

- **0** Data transfer with CRC is desired.
- **1** Data transfer without CRC is desired.

RST Software Reset. Writing a '1' to the register bit will cause internal synchronous reset of MS/SD controller, but does not reset register settings.

- **0** Otherwise
- **1** Reset MS/SD controller

CLKSRC The register bit specifies which clock is used as source clock of memory card. If MUC clock is used, the fastest clock rate for memory card is 104/4=26MHz. If MCPLL clock is used, the fastest clock rate for memory card is 48/2 =24MHz.

- **0** Use MCU clock as source clock of memory card.
- **1** Use MCPLL clock as source clock of memory card.

STDBY Standby Mode. If the module is powered down, operating clock to the module will be stopped. At the same time, clock to card detection circuitry will also be stopped. If detection of memory card insertion and removal is desired, write '1' to the register bit. If interrupt for detection of memory card insertion and removal is enabled, interrupt will take place whenever memory is inserted or removed.

- **0** Standby mode is disabled.
- **1** Standby mode is enabled.

RED Rise Edge Data. The register bit is used to determine that serial data input is latched at the falling edge or the rising edge of serial clock. The default setting is at the rising edge. If serial data has worse timing, set the register bit to '1'. **When memory card has worse timing on return read data, set the register bit to '1'.**

MediaTek Confidential Release for Cenon WCX

This document contains information that is proprietary to MediaTek Inc.

Unauthorized reproduction or disclosure of this information in whole or in part is strictly prohibited.

0 Serial data input is latched at the rising edge of serial clock.

1 Serial data input is latched at the falling edge of serial clock.

SCLKON Serial Clock Always On. It is for debugging purpose.

0 Not to have serial clock always on.

1 To have serial clock always on.

SCLKF The register field controls clock frequency of serial clock on MS/SD bus. Denote clock frequency of MS/SD bus serial clock as f_{slave} and clock frequency of the MS/SD controller as f_{host} which is 104 or 52 MHz. Then the value of the register field is as follows. **Note that the allowable maximum frequency of f_{slave} is 26MHz. While changing clock rate, it needs " 1T clock period before change + 1T clock period after change" for HW signal to re-synchronize.**

00000000b $f_{slave} = (1/2) * f_{host}$

00000001b $f_{slave} = (1/(4*1)) * f_{host}$

00000010b $f_{slave} = (1/(4*2)) * f_{host}$

00000011b $f_{slave} = (1/(4*3)) * f_{host}$

…

00010000b $f_{slave} = (1/(4*16)) * f_{host}$

…

11111111b $f_{slave} = (1/(4*255)) * f_{host}$

INTEN Interrupt Enable. Note that if interrupt capability is disabled then application software must poll the status of the register MSDC_STA to check for any interrupt request.

0 Interrupt induced by various conditions is disabled, no matter the controller is configured as the host of either SD/MMC Memory Card or Memory Stick.

1 Interrupt induced by various conditions is enabled, no matter the controller is configured as the host of either SD/MMC Memory Card or Memory Stick.

DMAEN DMA Enable. Note that if DMA capability is disabled then application software must poll the status of the register MSDC_STA for checking any data transfer request. If DMA is desired, the register bit must be set before command register is written.

0 DMA request induced by various conditions is disabled, no matter the controller is configured as the host of either SD/MMC Memory Card or Memory Stick.

1 DMA request induced by various conditions is enabled, no matter the controller is configured as the host of either SD/MMC Memory Card or Memory Stick.

PINEN Pin Interrupt Enable. The register bit is used to control if the pin for card detection is used as an interrupt source.

0 The pin for card detection is not used as an interrupt source.

1 The pin for card detection is used as an interrupt source.

MediaTek Confidential Release for Cenon WCX

This document contains information that is proprietary to MediaTek Inc.

Unauthorized reproduction or disclosure of this information in whole or in part is strictly prohibited.

DIRQEN Data Request Interrupt Enable. The register bit is used to control if data request is used as an interrupt source.

- **0** Data request is not used as an interrupt source.
- **1** Data request is used as an interrupt source.

RCDEN The register bit controls the output pin RCDEN that is used for card identification process when the controller is for SD/MMC Memory Card. Its output will control the pull down resistor on the system board to connect or disconnect with the signal CD/DAT3.

- **0** The output pin RCDEN will output logic low.
- **1** The output pin RCDEN will output logic high.

VDDPD The register bit controls the output pin VDDPD that is used for power saving. The output pin VDDPD will control power for memory card.

- **0** The output pin VDDPD will output logic low. The power for memory card will be turned off.
- **1** The output pin VDDPD will output logic high. The power for memory card will be turned on.

PRCFG0 Pull Up/Down Register Configuration for the pin WP. The default value is 10.

- **00** Pull up resistor and pull down resistor in the I/O pad of the pin WP are all disabled.
- **01** Pull down resistor in the I/O pad of the pin WP is enabled.
- **10** Pull up resistor in the I/O pad of the pin WP is enabled.
- **11** Use keeper of IO pad.

PRCFG1 Pull Up/Down Register Value for the pins CMD/BS. The default value is 0b01. **Note that pull up configuration for the pins CMD/BS with the register bit MCCPUPD in ACIF_CON3 setting to 1. Pull down configuration for the pins CMD/BS with the register bit MCCPUPD in ACIF_CON3(0x8001070c) setting to 0.**

- **00** Pull up resistor and pull down resistor in the I/O pad of the pin CMD/BS are all disabled.
- **01** Pull up/down resistor in the I/O pad of the pin CMD/BS value is 47k.
- **10** Pull up/down resistor in the I/O pad of the pin CMD/BS value is 47k.
- **11** Pull up/down resistor in the I/O pad of the pin CMD/BS value is 23.5k.

PRCFG2 Pull Up/Down Register Value for the pins DAT0, DAT1, DAT2, DAT3. The default value is 0b01. **Note that pull up configuration for the pins DAT0, DAT1, DAT2, DAT3 with the register bit MCDPUPD in ACIF_CON3 setting to 1. Pull down configuration for the pins DAT0, DAT1, DAT2, DAT3 with the register bit MCDPUPD in ACIF_CON3(0x8001070c) setting to 0. And DAT pin enable configuration from DAT0 to DAT3 is the register bit from GPIO71 to GPIO68 in GPIO_PULLSEL5(0x80020090).**

- **00** Pull up resistor and pull down resistor in the I/O pad of the pin DAT are all disabled.
- **01** Pull up/down resistor in the I/O pad of the pin DAT value is 47k.
- **10** Pull up/down resistor in the I/O pad of the pin DAT value is 47k.

MediaTek Confidential Release for Cenon WCX

This document contains information that is proprietary to MediaTek Inc.

Unauthorized reproduction or disclosure of this information in whole or in part is strictly prohibited.

11 Pull up/down resistor in the I/O pad of the pin DAT value is 23.5k.

FIFOTHD FIFO Threshold. The register field determines when to issue a DMA request. For write transactions, DMA requests will be asserted if the number of free entries in FIFO are larger than or equal to the value in the register field. For read transactions, DMA requests will be asserted if the number of valid entries in FIFO are larger than or equal to the value in the register field. The register field must be set according to the setting of data transfer count in DMA burst mode. If single mode for DMA transfer is used, the register field shall be set to 0b0001.

0000 Invalid.

0001 Threshold value is 1.

0010 Threshold value is 2.

...

1000 Threshold value is 8.

others Invalid

MSDC+0004h MS/SD Memory Card Controller Status Register MSDC_STA

Bit	15	14	13	12	11	10	9	8	7	6	5	4	3	2	1	0
Name	BUSY	FIFOCLR							FIFOCNT				INT	DRQ	BE	BF
Type	R	W							RO				RO	RO	RO	RO
Reset	0	-							0000				0	0	0	0

The register contains the status of FIFO, interrupts and data requests.

BF The register bit indicates if FIFO in MS/SD controller is full.

0 FIFO in MS/SD controller is not full.

1 FIFO in MS/SD controller is full.

BE The register bit indicates if FIFO in MS/SD controller is empty.

0 FIFO in MS/SD controller is not empty.

1 FIFO in MS/SD controller is empty.

DRQ The register bit indicates if any data transfer is required. While any data transfer is required, the register bit still will be active even if the register bit DIRQEN in the register MSDC_CFG is disabled. Data transfer can be achieved by DMA channel alleviating MCU loading, or by polling the register bit to check if any data transfer is requested. While the register bit DIRQEN in the register MSDC_CFG is disabled, the second method is used.

0 No DMA request exists.

1 DMA request exists.

INT The register bit indicates if any interrupt exists. While any interrupt exists, the register bit still will be active even if the register bit INTEN in the register MSDC_CFG is disabled. MS/SD controller can interrupt MCU by issuing interrupt request to Interrupt Controller, or software/application polls the register endlessly to check if any interrupt request exists in MS/SD controller. While the register bit INTEN in the register MSDC_CFG is

MediaTek Confidential Release for Cenon WCX

This document contains information that is proprietary to MediaTek Inc.

Unauthorized reproduction or disclosure of this information in whole or in part is strictly prohibited.

disabled, the second method is used. For read commands, it is possible that timeout error takes place. Software can read the status register to check if timeout error takes place without OS time tick support or data request is asserted. Note that the register bit will be cleared when reading the register MSDC_INT.

0 No interrupt request exists.

1 Interrupt request exists.

FIFOCNT FIFO Count. The register field shows how many valid entries are in FIFO.

0000 There is 0 valid entry in FIFO.

0001 There is 1 valid entry in FIFO.

0010 There are 2 valid entries in FIFO.

…

1000 There are 8 valid entries in FIFO.

others Invalid

FIFOCLR Clear FIFO. Writing '1' to the register bit will cause the content of FIFO clear and reset the status of FIFO controller.

0 No effect on FIFO.

1 Clear the content of FIFO clear and reset the status of FIFO controller.

BUSY Status of the controller. If the controller is in busy state, the register bit will be '1'. Otherwise '0'.

0 The controller is in busy state.

1 The controller is in idle state.

MSDC+0008h MS/SD Memory Card Controller Interrupt Register MSDC_INT

Bit	15	14	13	12	11	10	9	8	7	6	5	4	3	2	1	0
Name									SDIOIRQ	SDR1BIRQ		SDMCIRQ	SDDATIRQ	SDCMDIRQ	PINIRQ	DIRQ
Type									RC	RC		RC	RC	RC	RC	RC
Reset									0	0		0	0	0	0	0

The register contains the status of interrupts. Note that the register still show status of interrupt even though interrupt is disabled, that is, the register bit INTEN of the register MSDC_CFG is set to '0. It implies that software interrupt can be implemented by polling the register bit INT of the register MSDC_STA and this register. **However, if hardware interrupt is desired, remember to clear the register before setting the register bit INTEN of the register MSDC_CFG to '1'. Or undesired hardware interrupt arisen from previous interrupt status may take place.**

DIRQ Data Request Interrupt. The register bit indicates if any interrupt for data request exists. Whenever data request exists and data request as an interrupt source is enabled, i.e., the register bit DIRQEN in the register MSDC_CFG is set to '1', the register bit will be active. It will be reset when reading it. For software, data requests can be recognized by polling the register bit DRQ or by data request interrupt. Data request interrupts will be generated every FIFOTHD data transfers.

MediaTek Confidential Release for Cenon WCX

This document contains information that is proprietary to MediaTek Inc.

Unauthorized reproduction or disclosure of this information in whole or in part is strictly prohibited.

MediaTek Confidential Release for Cenon WCX

0 No Data Request Interrupt.

1 Data Request Interrupt occurs.

PINIRQ Pin Change Interrupt. The register bit indicates if any interrupt for memory card insertion/removal exists. Whenever memory card is inserted or removed and card detection interrupt is enabled, i.e., the register bit PINEN in the register MSDC_CFG is set to '1', the register bit will be set to '1'. It will be reset when the register is read.

0 Otherwise.

1 Card is inserted or removed.

SDCMDIRQ SD Bus CMD Interrupt. The register bit indicates if any interrupt for SD CMD line exists. Whenever interrupt for SD CMD line exists, i.e., any bit in the register SDC_CMDSTA is active, the register bit will be set to '1' if interrupt is enabled. It will be reset when the register is read.

0 No SD CMD line interrupt.

1 SD CMD line interrupt exists.

SDDATIRQ SD Bus DAT Interrupt. The register bit indicates if any interrupt for SD DAT line exists. Whenever interrupt for SD DAT line exists, i.e., any bit in the register SDC_ DATSTA is active, the register bit will be set to '1' if interrupt is enabled. It will be reset when the register is read.

0 No SD DAT line interrupt.

1 SD DAT line interrupt exists.

SDMCIRQ SD Memory Card Interrupt. The register bit indicates if any interrupt for SD Memory Card exists. Whenever interrupt for SD Memory Card exists, i.e., any bit in the register SDC_CSTA is active, the register bit will be set to '1' if interrupt is enabled. It will be reset when the register is read.

0 No SD Memory Card interrupt.

1 SD Memory Card interrupt exists.

SDR1BIRQ SD/MMC R1b Response Interrupt. The register bit will be active when a SD/MMC command with R1b response finishes and the DAT0 line has transition from busy to idle state. **Single block write commands with R1b response will cause the interrupt when the command completes no matter successfully or with CRC error. However, multi-block write commands with R1b response do not cause the interrupt because multi-block write commands are always stopped by STOP_TRANS commands. STOP_TRANS commands (with R1b response) behind multi-block write commands will cause the interrupt. Single block read command with R1b response will cause the interrupt when the command completes but multi-block read commands do not. Note that STOP_TRANS commands (with R1b response) behind multi-block read commands will cause the interrupt.**

0 No interrupt for SD/MMC R1b response.

1 Interrupt for SD/MMC R1b response exists.

This document contains information that is proprietary to MediaTek Inc.

Unauthorized reproduction or disclosure of this information in whole or in part is strictly prohibited.

MSDC+000Ch MS/SD Memory Card Controller Data Register MSDC_DAT

Bit	31	30	29	28	27	26	25	24	23	22	21	20	19	18	17	16
Name	DATA[31:16]															
Type	R/W															
Bit	15	14	13	12	11	10	9	8	7	6	5	4	3	2	1	0
Name	DATA[15:0]															
Type	R/W															

The register is used to read/write data from/to FIFO inside MS/SD controller. Data access is in unit of 32 bits.

MSDC+0010h MS/SD Memory Card Pin Status Register MSDC_PS

Bit	31	30	29	28	27	26	25	24	23	22	21	20	19	18	17	16
Name								CMD	DAT							
Type								RO	RO							
Reset								-	-							
Bit	15	14	13	12	11	10	9	8	7	6	5	4	3	2	1	0
Name	CDDEBOUNCE											PINCHG	PIN0	POEN0	PIEN0	CDEN
Type	RW											RC	RO	R/W	R/W	R/W
Reset	0000											0	1	0	0	0

The register is used for card detection. When the memory card controller is powered on, and the system is powered on, the power for the memory card is still off unless power has been supplied by the PMIC. Meanwhile, pad for card detection defaults to pull down when the system is powered on. The scheme of card detection for MS is the same as that for SD/MMC.

For detecting card insertion, first pull up INS pin, and then enable card detection and input pin at the same time. After 32 cycles of controller clock, status of pin changes will emerge. For detecting card removal, just keep enabling card detection and input pin.

CDEN Card Detection Enable. The register bit is used to enable or disable card detection.
- **0** Card detection is disabled.
- **1** Card detection is enabled.

PIEN0 The register bit is used to control input pin for card detection.
- **0** Input pin for card detection is disabled.
- **1** Input pin for card detection is enabled.

POEN0 The register bit is used to control output of input pin for card detection.
- **0** Output of input pin for card detection is disabled.
- **1** Output of input pin for card detection is enabled.

PIN0 The register shows the value of input pin for card detection.

MediaTek Confidential Release for Cenon WCX

This document contains information that is proprietary to MediaTek Inc.

Unauthorized reproduction or disclosure of this information in whole or in part is strictly prohibited.

0 The value of input pin for card detection is logic low.

1 The value of input pin for card detection is logic high.

PINCHG Pin Change. The register bit indicates the status of card insertion/removal. If memory card is inserted or removed, the register bit will be set to '1' no matter pin change interrupt is enabled or not. It will be cleared when the register is read.

0 Otherwise.

1 Card is inserted or removed.

CDDEBOUNCE The register field specifies the time interval for card detection de-bounce. Its default value is 0. It means that de-bounce interval is 32 cycle time of 32KHz. The interval will extend one cycle time of 32KHz by increasing the counter by 1.

DAT Memory Card Data Lines.

CMD Memory Card Command Lines.

MSDC+0014h MS/SD Memory Card Controller IO Control Register MSDC_IOCON

Bit	31	30	29	28	27	26	25	24	23	22	21	20	19	18	17	16
Name	DLT											CRCDIS	CMDSEL	INTLH		DSW
Type	R/W											R/W	R/W	R/W		R/W
Reset	00000010											0	0	0		0
Bit	15	14	13	12	11	10	9	8	7	6	5	4	3	2	1	0
Name	CMDRE						PRCFG3		SRCFG1	SRCFG0	ODCCFG1			ODCCFG0		
Type	R/W						R/W		R/W	R/W	R/W			R/W		
Reset	0						10		1	1	000			011		

The register specifies **Output Driving Capability** and **Slew Rate** of IO pads for MSDC. The reset value is suggestion setting. If output driving capability of the pins DAT0, DAT1, DAT2 and DAT3 is too large, it's possible to arise ground bounce and thus result in glitch on SCLK. The actual driving current will depend on the PAD type selected for the chip.

ODCCFG0 Output driving capability the pins CMD/BS and SCLK

000 4mA

010 12mA

100 8mA

110 16mA

ODCCFG1 Output driving capability the pins DAT0, DAT1, DAT2 and DAT3

000 4mA

010 12mA

100 8mA

MediaTek Confidential Release for Cenon WCX

This document contains information that is proprietary to MediaTek Inc.

Unauthorized reproduction or disclosure of this information in whole or in part is strictly prohibited.

110 16mA

SRCFG0 Output driving capability the pins CMD/BS and SCLK

0 Fast Slew Rate

1 Slow Slew Rate

SRCFG1 Output driving capability the pins DAT0, DAT1, DAT2 and DAT3

0 Fast Slew Rate

1 Slow Slew Rate

PRCFG3 Pull Up/Down Register Configuration for the pin INS. The default value is 10.

00 Pull up resistor and pull down resistor in the I/O pad of the pin INS are all disabled.

01 Pull down resistor in the I/O pad of the pin INS is enabled.

10 Pull up resistor in the I/O pad of the pin INS is enabled.

11 Use keeper of IO pad.

CMDRE The register bit is used to determine whether the host should latch response token (which is sent from card on CMD line) at rising edge or falling edge of serial clock.

0 Host latches response at rising edge of serial clock

1 Host latches response at falling edge of serial clock

DSW The register bit is used to determine whether the host should latch data with 1-T delay or not. For SD/MMC card, this bit is suggest to be 0.

0 Host latches the data with 1-T delay

1 Host latches the data without 1-T delay

INTLH This field is used to select the latch timing for SDIO multi-block read interrupt. Note that, SDIO is not support in MT6252.

00 Host latches INT at the second backend clock after the end bit of current data block from card is received. (This is the default setting)

01 Host latches INT at the first backend clock after the end bit of current data block from card is received.

10 Host latches INT at the second backend clock after the end bit of current data block from card is received.

11 Host latches INT at the third backend clock after the end bit of current data block from card is received.

CMDSEL The register bit is used to determine whether the host should delay 1-T to latch response from card.

0 Host latches response without 1-T delay.

1 Host latches response with 1-T delay.

CRCDIS The register bit is used to switch-off the data CRC check for SD/MMC read data.

0 CRC Check is on.

1 CRC Check is off.

MediaTek Confidential Release for Cenon WCX

This document contains information that is proprietary to MediaTek Inc.

Unauthorized reproduction or disclosure of this information in whole or in part is strictly prohibited.

DLT Data Latch Timing. The register is used for SW to select the latch timing on data line.

Figure 41 illustrates the data line latch timing. sclk_out is the serial clock output to card. div_clk is the internal clock used for generating divided clock. The number "1 2 1 2" means the current sclk_out is divided from div_clk by a ratio of 2. data_in is the output data from card, and latched_data(r)/(f) is the rising/falling edge latched data inside the host (configured by RED in MSDC_CFG). In this example, SCLKF(in MSDC_CFG) is set to 8'b0 which means the division ratio is 2, and DLT is set to 1. Note that the value of DLT CANNOT be set as 0 and its value should not exceed the division ratio (in the example, the division ratio is 2). Also note that, the latching time will be one div_clk later than the indicated DLT value and the falling edge is always half div_clk ahead from rising edge. The default value of DLT is set to 8'b2.

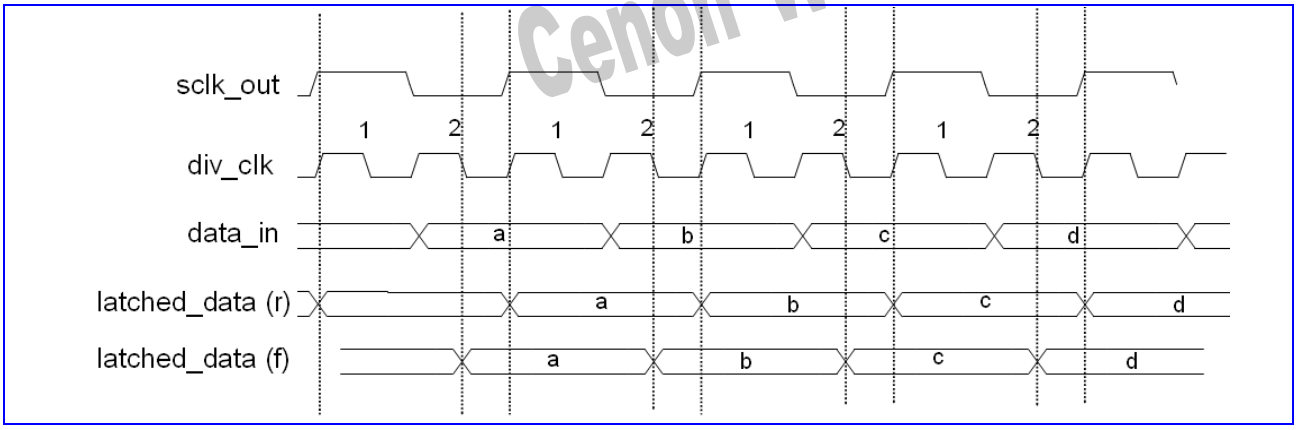

Figure 41 Illustration of data line latch timing

4.11.3.2 SD Memory Card Controller Register Definitions

MSDC+0020h SD Memory Card Controller Configuration Register SDC_CFG

Bit	31	30	29	28	27	26	25	24	23	22	21	20	19	18	17	16
Name	DTOC								WDOD				SDIO		MDLEN	SIEN
Type	R/W								R/W				R/W		R/W	R/W
Reset	00000000								0000				0		0	0
Bit	15	14	13	12	11	10	9	8	7	6	5	4	3	2	1	0
Name	BSYDLY				BLKLEN											
Type	R/W				R/W											
Reset	1000				00000000000											

This document contains information that is proprietary to MediaTek Inc.

Unauthorized reproduction or disclosure of this information in whole or in part is strictly prohibited.

MediaTek Confidential Release for Cenon WCX

The register is used for configuring the MS/SD Memory Card Controller when it is configured as the host of SD Memory Card. If the controller is configured as the host of Memory Stick, the contents of the register have no impact on the operation of the controller. Note that SDC_CFG[31:16] can be accessed by 16-bit APB bus access.

BLKLEN It refers to Block Length. The register field is used to define the length of one block in unit of byte in a data transaction. The maximal value of block length is 2048 bytes.

- **000000000000** Reserved.
- **000000000001** Block length is 1 byte.
- **000000000010** Block length is 2 bytes.
- …
- **011111111111** Block length is 2047 bytes.
- **100000000000** Block length is 2048 bytes.

BSYDLY The register field is only valid for the commands with R1b response. If the command has a response of R1b type, MS/SD controller must monitor the data line 0 for card busy status from the bit time that is two serial clock cycles after the command end bit to check if operations in SD/MMC Memory Card have finished. The register field is used to expand the time between the command end bit and end of detection period to detect card busy status. If time is up and there is no card busy status on data line 0, then the controller will abandon the detection.

- **0000** No extend.
- **0001** Extend one more serial clock cycle.
- **0010** Extend two more serial clock cycles.
- …
- **1111** Extend fifteen more serial clock cycle.

SIEN Serial Interface Enable. It should be enabled as soon as possible before any command.

- **0** Serial interface for SD/MMC is disabled.
- **1** Serial interface for SD/MMC is enabled.

SDIO SDIO Enable. Note that, SDIO is not support in MT6252.

- **0** SDIO mode is disabled
- **1** SDIO mode is enabled

MDLEN Multiple Data Line Enable. The register can be enabled only when SD Memory Card is applied and detected by software application. It is the responsibility of the application to program the bit correctly when an MultiMediaCard is applied. If an MultiMediaCard is applied and 4-bit data line is enabled, then 4 bits will be output every serial clock. Therefore, data integrity will fail. Note that, Only 1-bit mode could be supported in MT6252.

- **0** 4-bit Data line is disabled.
- **1** 4-bit Data line is enabled.

MediaTek Confidential Release for Cenon WCX

This document contains information that is proprietary to MediaTek Inc.

Unauthorized reproduction or disclosure of this information in whole or in part is strictly prohibited.

WDOD Write Data Output Delay. The period from finish of the response for the initial host write command or the last write data block in a multiple block write operation to the start bit of the next write data block requires at least two serial clock cycles. The register field is used to extend the period (Write Data Output Delay) in unit of one serial clock.

0000 No extend.
0001 Extend one more serial clock cycle.
0010 Extend two more serial clock cycles.
…
1111 Extend fifteen more serial clock cycle.

DTOC Data Timeout Counter. The period from finish of the initial host read command or the last read data block in a multiple block read operation to the start bit of the next read data block requires at least two serial clock cycles. The counter is used to extend the period (Read Data Access Time) in unit of 65,536 serial clock. See the register field description of the register bit RDINT for reference.

00000000 Extend 65,536 more serial clock cycle.
00000001 Extend 65,536x2 more serial clock cycle.
00000010 Extend 65,536x3 more serial clock cycle.
…
11111111 Extend 65,536x 256 more serial clock cycle.

MSDC+0024h SD Memory Card Controller Command Register SDC_CMD

Bit	31	30	29	28	27	26	25	24	23	22	21	20	19	18	17	16
Name	CTOC															CMDFAIL
Type	R/W															R/W
Reset	01000000															0
Bit	15	14	13	12	11	10	9	8	7	6	5	4	3	2	1	0
Name	INTC	STOP	RW	DTYPE		IDRT	RSPTYP			BREAK	CMD					
Type	R/W	R/W	R/W	R/W		R/W	R/W			R/W	R/W					
Reset	0	0	0	00		0	000			0	000000					

The register defines a SD Memory Card command and its attribute. Before MS/SD controller issues a transaction onto SD bus, application shall specify other relative setting such as argument for command. After application writes the register, MS/SD controller will issue the corresponding transaction onto SD serial bus. If the command is GO_IDLE_STATE, the controller will have serial clock on SD/MMC bus run 128 cycles before issuing the command.

CMD SD Memory Card command. It is totally 6 bits.

BREAK Abort a pending MMC GO_IRQ_MODE command. It is only valid for a pending GO_IRQ_MODE command waiting for MMC interrupt response.

MediaTek Confidential Release for Cenon WCX

This document contains information that is proprietary to MediaTek Inc.

Unauthorized reproduction or disclosure of this information in whole or in part is strictly prohibited.

0 Other fields are valid.

1 Break a pending MMC GO_IRQ_MODE command in the controller. Other fields are invalid.

RSPTYP The register field defines response type for the command. For commands with R1 and R1b response, the register SDC_CSTA (not SDC_STA) will update after response token is received. This register SDC_CSTA contains the status of the SD/MMC and it will be used as response interrupt sources. Note that if CMD7 is used with all 0's RCA then RSPTYP must be "000". And the command "GO_TO_IDLE" also have RSPTYP='000'.

000 There is no response for the command. For instance, broadcast command without response and GO_INACTIVE_STATE command.

001 The command has R1 response. R1 response token is 48-bit.

010 The command has R2 response. R2 response token is 136-bit.

011 The command has R3 response. Even though R3 is 48-bit response, but it does not contain CRC checksum.

100 The command has R4 response. R4 response token is 48-bit. (Only for MMC)

101 The command has R5 response. R5 response token is 48-bit. (Only for MMC)

110 The command has R6 response. R6 response token is 48-bit.

111 The command has R1b response. If the command has a response of R1b type, MS/SD controller must monitor the data line 0 for card busy status from the bit time that is two or four serial clock cycles after the command end bit to check if operations in SD/MMC Memory Card have finished. There are two cases for detection of card busy status. The first case is that the host stops the data transmission during an active write data transfer. The card will assert busy signal after the stop transmission command end bit followed by four serial clock cycles. The second case is that the card is in idle state or under a scenario of receiving a stop transmission command between data blocks when multiple block write command is in progress. The register bit is valid only when the command has a response token.

IDRT Identification Response Time. The register bit indicates if the command has a response with N_{ID} (that is, 5 serial clock cycles as defined in SD Memory Card Specification Part 1 Physical Layer Specification version 1.0) response time. The register bit is valid only when the command has a response token. Thus the register bit must be set to '1' for CMD2 (ALL_SEND_CID) and ACMD41 (SD_APP_OP_CMD).

0 Otherwise.

1 The command has a response with N_{ID} response time.

DTYPE The register field defines data token type for the command.

00 No data token for the command

01 Single block transaction

10 Multiple block transaction. That is, the command is a multiple block read or write command.

11 Stream operation. It only shall be used when an MultiMediaCard is applied.

RW The register bit defines the command is a read command or write command. The register bit is valid only when the command will cause a transaction with data token.

0 The command is a read command.

MediaTek Confidential Release for Cenon WCX

This document contains information that is proprietary to MediaTek Inc.

Unauthorized reproduction or disclosure of this information in whole or in part is strictly prohibited.

1 The command is a write command.

STOP The register bit indicates if the command is a stop transmission command.

0 The command is not a stop transmission command.

1 The command is a stop transmission command.

INTC The register bit indicates if the command is GO_IRQ_STATE. If the command is GO_IRQ_STATE, the period between command token and response token will not be limited.

0 The command is not GO_IRQ_STATE.

1 The command is GO_IRQ_STATE.

MSDC+0028h SD Memory Card Controller Argument Register SDC_ARG

Bit	31	30	29	28	27	26	25	24	23	22	21	20	19	18	17	16
Name	ARG [31:16]															
Type	R/W															
Bit	15	14	13	12	11	10	9	8	7	6	5	4	3	2	1	0
Name	ARG [15:0]															
Type	R/W															

The register contains the argument of the SD/MMC Memory Card command.

MSDC+002Ch SD Memory Card Controller Status Register SDC_STA

Bit	15	14	13	12	11	10	9	8	7	6	5	4	3	2	1	0
Name	WP											FEDATBUSY	FECMDBUSY	BEDATBUSY	BECMDBUSY	BESDCBUSY
Type	R											RO	RO	RO	RO	RO
Reset	-											0	0	0	0	0

The register contains various status of MS/SD controller as the controller is configured as the host of SD Memory Card.

BESDCBUSY The register field indicates if MS/SD controller is busy, that is, any transmission is going on CMD or DAT line on SD bus. This bit shows backend controller's SDC busy state. The busy state is sync from card clock domain to bus clock domain.

0 Backend MS/SD controller is idle.

1 Backend MS/SD controller is busy.

BECMDBUSY The register field indicates if any transmission is going on CMD line on SD bus. This bit shows backend controller's CMD busy state. The busy state is sync from card clock domain to bus clock domain.

0 Backend MS/SDC Controller gets the info that no transmission is going on CMD line on SD bus.

1 Backend MS/SDC Controller gets the info that there exists transmission going on CMD line on SD bus.

BEDATBUSY The register field indicates if any transmission is going on DAT line on SD bus.

0 Backend MS/SDC Controller gets the info that no transmission is going on DAT line on SD bus.

MediaTek Confidential Release for Cenon WCX

This document contains information that is proprietary to MediaTek Inc.

Unauthorized reproduction or disclosure of this information in whole or in part is strictly prohibited.

1 Backend MS/SDC Controller gets the info that there exists transmission going on DAT line on SD bus.

FECCMDBUSY The register field indicates if any transmission is going on CMD line on SD bus. This bit indicates directly the CMD line at card clock domain.

0 No transmission is going on CMD line on SD bus.

1 There exists transmission going on CMD line on SD bus.

FEDATBUSY The register field indicates if any transmission is going on DAT line on SD bus. This bit indicates directly the CMD line at card clock domain. **For those commands without data but still involving DAT line, the register bit is useless. For example, if an Erase command is issued, then checking if the register bit is '0' before issuing next command with data would not guarantee that the controller is idle. In this situation, use the register bit BESDCBUSY.**

0 No transmission is going on DAT line on SD bus.

1 There exists transmission going on DAT line on SD bus.

WP It is used to detect the status of Write Protection Switch on SD Memory Card. The register bit shows the status of Write Protection Switch on SD Memory Card. There is no default reset value. The pin WP (Write Protection) is also only useful while the controller is configured for SD Memory Card. Note that, write protection feature is not support in MT6252.

1 Write Protection Switch ON. It means that memory card is desired to be write-protected.

0 Write Protection Switch OFF. It means that memory card is writable.

CTOC Command Timeout Counter. The period between an end bit of command and a start bit of response except CMD2 and ACMD41. The unit of the counter is one serial clock cycle.

MSDC+0030h SD Memory Card Controller Response Register 0 SDC_RESP0

Bit	31	30	29	28	27	26	25	24	23	22	21	20	19	18	17	16
Name	RESP [31:16]															
Type	RO															
Bit	15	14	13	12	11	10	9	8	7	6	5	4	3	2	1	0
Name	RESP [15:0]															
Type	RO															

The register contains parts of the last SD/MMC Memory Card bus response. See description for the register field SDC_RESP3.

MSDC+0034h SD Memory Card Controller Response Register 1 SDC_RESP1

Bit	31	30	29	28	27	26	25	24	23	22	21	20	19	18	17	16
Name	RESP [63:48]															
Type	RO															
Bit	15	14	13	12	11	10	9	8	7	6	5	4	3	2	1	0

MediaTek Confidential Release for Cenon WCX

This document contains information that is proprietary to MediaTek Inc.

Unauthorized reproduction or disclosure of this information in whole or in part is strictly prohibited.

Name	RESP [47:32]
Type	RO

The register contains parts of the last SD/MMC Memory Card bus response. See description for the register field SDC_RESP3.

MSDC+0038h SD Memory Card Controller Response Register 2 SDC_RESP2

Bit	31	30	29	28	27	26	25	24	23	22	21	20	19	18	17	16
Name	RESP [95:80]															
Type	RO															
Bit	15	14	13	12	11	10	9	8	7	6	5	4	3	2	1	0
Name	RESP [79:64]															
Type	RO															

The register contains parts of the last SD/MMC Memory Card bus response. See description for the register field SDC_RESP3.

MSDC+003Ch SD Memory Card Controller Response Register 3 SDC_RESP3

Bit	31	30	29	28	27	26	25	24	23	22	21	20	19	18	17	16
Name	RESP [127:112]															
Type	RO															
Bit	15	14	13	12	11	10	9	8	7	6	5	4	3	2	1	0
Name	RESP [111:96]															
Type	RO															

The register contains parts of the last SD/MMC Memory Card bus response. The register fields SDC_RESP0, SDC_RESP1, SDC_RESP2 and SDC_RESP3 compose the last SD/MMC Memory card bus response. For response of type R2, that is, response of the command ALL_SEND_CID, SEND_CSD and SEND_CID, only bit 127 to 0 of response token is stored in the register field SDC_RESP0, SDC_RESP1, SDC_RESP2 and SDC_RESP3. For response of other types, only bit 39 to 8 of response token is stored in the register field SDC_RESP0.

MSDC+0040h SD Memory Card Controller Command Status Register SDC_CMDSTA

Bit	15	14	13	12	11	10	9	8	7	6	5	4	3	2	1	0
Name													MMCIRQ	RSPCRCERR	CMDTO	CMDRDY
Type													RC	RC	RC	RC
Reset													0	0	0	0

MediaTek Confidential Release for Cenon WCX

This document contains information that is proprietary to MediaTek Inc.

Unauthorized reproduction or disclosure of this information in whole or in part is strictly prohibited.

The register contains the status of MS/SD controller during command execution and that of MS/SD bus protocol after command execution when MS/SD controller is configured as the host of SD/MMC Memory Card. The register will also be used as interrupt sources. The register will be cleared when reading the register. Meanwhile, if interrupt is enabled and thus interrupt caused by the register is generated, reading the register will deassert the interrupt.

CMDRDY For command without response, the register bit will be '1' once the command completes on SD/MMC bus. For command with response, the register bit will be '1' whenever the command is issued onto SD/MMC bus and its corresponding response is received **without CRC error**.

0 Otherwise.

1 Command with/without response finish successfully without CRC error.

CMDTO Timeout on CMD detected. A '1' indicates that MS/SD controller detected a timeout condition while waiting for a response on the CMD line.

0 Otherwise.

1 MS/SD controller detected a timeout condition while waiting for a response on the CMD line.

RSPCRCERR CRC error on CMD detected. A '1' indicates that MS/SD controller detected a CRC error **after reading a response from the CMD line.**

0 Otherwise.

1 MS/SD controller detected a CRC error after reading a response from the CMD line.

MMCIRQ MMC requests an interrupt. A '1' indicates that a MMC supporting command class 9 issued an interrupt request.

0 Otherwise.

1 A '1' indicates that a MMC supporting command class 9 issued an interrupt request.

MSDC+0044h SD Memory Card Controller Data Status Register SDC_DATSTA

Bit	15	14	13	12	11	10	9	8	7	6	5	4	3	2	1	0
Name														DATCRCERR	DATTO	BLKDONE
Type														RC	RC	RC
Reset														0	0	0

The register contains the status of MS/SD controller during data transfer on DAT line(s) when MS/SD controller is configured as the host of SD/MMC Memory Card. The register also will be used as interrupt sources. The register will be cleared when reading the register. Meanwhile, if interrupt is enabled and thus interrupt caused by the register is generated, reading the register will deassert the interrupt.

BLKDONE The register bit indicates the status of data block transfer.

0 Otherwise.

1 A data block was successfully transferred.

MediaTek Confidential Release for Cenon WCX

This document contains information that is proprietary to MediaTek Inc.

Unauthorized reproduction or disclosure of this information in whole or in part is strictly prohibited.

DATTO Timeout on DAT detected. A '1' indicates that MS/SD controller detected a timeout condition while waiting for data token on the DAT line.

0 Otherwise.

1 MS/SD controller detected a timeout condition while waiting for data token on the DAT line.

DATCRCERR CRC error on DAT detected. A '1' indicates that MS/SD controller detected a CRC error after reading a block of data from the DAT line or SD/MMC signaled a CRC error after writing a block of data to the DAT line.

0 Otherwise.

1 MS/SD controller detected a CRC error after reading a block of data from the DAT line or SD/MMC signaled a CRC error after writing a block of data to the DAT line.

MSDC+0048h SD Memory Card Status Register SDC_CSTA

Bit	31	30	29	28	27	26	25	24	23	22	21	20	19	18	17	16
Name	CSTA [31:16]															
Type	RC															
Reset	0000000000000000															
Bit	15	14	13	12	11	10	9	8	7	6	5	4	3	2	1	0
Name	CSTA [15:0]															
Type	RC															
Reset	0000000000000000															

After commands with R1 and R1b response this register contains the status of the SD/MMC card and it will be used as response interrupt sources. In all register fields, logic high indicates error and logic low indicates no error. The register will be cleared when reading the register. Meanwhile, if interrupt is enabled and thus interrupt caused by the register is generated, reading the register will deassert the interrupt.

CSTA31 **OUT_OF_RANGE**. The command's argument was out of the allowed range for this card.

CSTA30 **ADDRESS_ERROR**. A misaligned address that did not match the block length was used in the command.

CSTA29 **BLOCK_LEN_ERROR**. The transferred block length is not allowed for this card, or the number of transferred bytes does not match the block length.

CSTA28 **ERASE_SEQ_ERROR**. An error in the sequence of erase commands occurred.

CSTA27 **ERASE_PARAM**. An invalid selection of write-blocks for erase occurred.

CSTA26 **WP_VIOLATION**. Attempt to program a write-protected block.

CSTA25 Reserved. Return zero.

CSTA24 **LOCK_UNLOCK_FAILED**. Set when a sequence or password error has been detected in lock/unlock card command or if there was an attempt to access a locked card.

CSTA23 **COM_CRC_ERROR**. The CRC check of the previous command failed.

CSTA22 **ILLEGAL_COMMAND**. Command not legal for the card state.

CSTA21 **CARD_ECC_FAILED**. Card internal ECC was applied but failed to correct the data.

MediaTek Confidential Release for Cenon WCX

This document contains information that is proprietary to MediaTek Inc.

Unauthorized reproduction or disclosure of this information in whole or in part is strictly prohibited.

CSTA20 **CC_ERROR**. Internal card controller error.
CSTA19 **ERROR**. A general or an unknown error occurred during the operation.
CSTA18 **UNDERRUN**. The card could not sustain data transfer in stream read mode.
CSTA17 **OVERRUN**. The card could not sustain data programming in stream write mode.
CSTA16 **CID/CSD_OVERWRITE**. It can be either one of the following errors: 1. The CID register has been already written and cannot be overwritten 2. The read only section of the CSD does not match the card. 3. An attempt to reverse the copy (set as original) or permanent WP (unprotected) bits was made.
CSTA[15:4] Reserved. Return zero.
CSTA3 **AKE_SEQ_ERROR**. Error in the sequence of authentication process
CSTA[2:0] Reserved. Return zero.

MSDC+004Ch SD Memory Card IRQ Mask Register 0

SDC_IRQMASK 0

Bit	31	30	29	28	27	26	25	24	23	22	21	20	19	18	17	16
Name	IRQMASK [31:16]															
Type	R/W															
Reset	0000000000000000															
Bit	15	14	13	12	11	10	9	8	7	6	5	4	3	2	1	0
Name	IRQMASK [15:0]															
Type	R/W															
Reset	0000000000000000															

The register contains parts of SD Memory Card Interrupt Mask Register. See the register description of the register SDC_IRQMASK1 for reference. The register will mask interrupt sources from the register SDC_CMDSTA and SDC_DATSTA. IRQMASK[15:0] is for SDC_CMDSTA and IRQMASK[31:16] for SDC_DATSTA. A '1' in some bit of the register will mask the corresponding interrupt source with the same bit position. For example, if IRQMASK[0] is '1' then interrupt source from the register field CMDRDY of the register SDC_ CMDSTA will be masked. A '0' in some bit will not cause interrupt mask on the corresponding interrupt source from the register SDC_CMDSTA and SDC_DATSTA.

MSDC+0050h SD Memory Card IRQ Mask Register 1

SDC_IRQMASK 1

Bit	31	30	29	28	27	26	25	24	23	22	21	20	19	18	17	16
Name	IRQMASK [63:48]															
Type	R/W															
Reset	0000000000000000															
Bit	15	14	13	12	11	10	9	8	7	6	5	4	3	2	1	0
Name	IRQMASK [47:32]															
Type	R/W															

MediaTek Confidential Release for Cenon WCX

This document contains information that is proprietary to MediaTek Inc.

Unauthorized reproduction or disclosure of this information in whole or in part is strictly prohibited.

Reset	0000000000000000

The register contains parts of SD Memory Card Interrupt Mask Register. The registers SDC_IRQMASK1 and SDC_IRQMASK0 compose the SD Memory Card Interrupt Mask Register. The register will mask interrupt sources from the register SDC_CSTA. A '1' in some bit of the register will mask the corresponding interrupt source with the same bit position. For example, if IRQMASK[63] is '1' then interrupt source from the register field OUT_OF_RANGE of the register SDC_ CSTA will be masked. A '0' in some bit will not cause interrupt mask on the corresponding interrupt source from the register SDC_ CSTA.

MSDC+0054h SDIO Configuration Register SDIO_CFG

Bit	31	30	29	28	27	26	25	24	23	22	21	20	19	18	17	16
Name																
Type																
Reset																
Bit	15	14	13	12	11	10	9	8	7	6	5	4	3	2	1	0
Name														DSBSEL	INTSEL	INTEN
Type														R/W	R/W	R/W
Reset														0	0	0

The register is used to configure functionality for SDIO. Note that, SDIO is not support in MT6252.

INTEN Interrupt enable for SDIO.

- **0** Disable
- **1** Enable

INTSEL Interrupt Signal Selection

- **0** Use data line 1 as interrupt signal
- **1** Use data line 5 as interrupt signal

DSBSEL Data Block Start Bit Selection.

- **0** Use data line 0 as start bit of data block and other data lines are ignored.
- **1** Start bit of a data block is received only when data line 0-3 all become low.

MSDC+0058h SDIO Status Register SDIO_STA

Bit	31	30	29	28	27	26	25	24	23	22	21	20	19	18	17	16
Name																
Type																
Reset																
Bit	15	14	13	12	11	10	9	8	7	6	5	4	3	2	1	0
Name																IRQ
Type																RO
Reset																0

MediaTek Confidential Release for Cenon WCX

This document contains information that is proprietary to MediaTek Inc.

Unauthorized reproduction or disclosure of this information in whole or in part is strictly prohibited.

MediaTek Confidential Release for Cenon WCX

4.11.4 Application Notes

4.11.4.1 Initialization Procedures After Power On

```
Disable power down control for MSDC module
```

Remember to power on MSDC module before starting any operation to it.

4.11.4.2 Card Detection Procedures

The pseudo code is as follows:

```
MSDC_CFG.PRCFG0 = 2'b10
MSDC_PS = 2'b11
MSDC_CFG.VDDPD = 1
if(MSDC_PS.PINCHG) { // card is inserted
     . . .
}
```

The pseudo code segment perform the following tasks:

1. First pull up CD/DAT3 (INS) pin.
2. Enable card detection and input pin at the same time.
3. Turn on power for memory card.
4. Detect insertion of memory card.

4.11.4.3 Notes on Commands

For MS, check if MSC_STA.RDY is '1' before issuing any command.

For SD/MMC, if the command desired to be issued involves data line, for example, commands with data transfer or R1b response, check if SDC_STA.SDCBUSY is '0' before issuing. If the command desired to be issued does not involve data line, only check if SDC_STA.CMDBUSY is '0' before issuing.

4.11.4.4 Notes on Data Transfer

- For SD/MMC, if multiple-block-write command is issued then only issue STOP_TRANS command inter-blocks instead of intra-blocks.
- Once SW decides to issue STOP_TRANS commands, no more data transfer from or to the controller.

This document contains information that is proprietary to MediaTek Inc.

Unauthorized reproduction or disclosure of this information in whole or in part is strictly prohibited.

4.11.4.5 Notes on Frequency Change

Before changing the frequency of serial clock on MS/SD/MMC bus, it is necessary to disable serial interface of the controller. That is, set the register bit SIEN of the register SDC_CFG to '0' for SD/MMC controller, and set the register bit SIEN of the register MSC_CFG to '0' for Memory Stick controller. Serial interface of the controller needs to be enabled again before starting any operation to the memory card.

4.11.4.6 Notes on Response Timeout

If a read command doest not receive response, that is, it terminates with a timeout, then register SDC_DATSTA needs to be cleared by reading it. The register bit "DATTO" should be active. However, it may take a while before the register bit becomes active. The alternative is to send the STOP_TRANS command. However, this method will receive response with illegal-command information. Also, remember to check if the register bit SDC_STA.CMDBUSY is active before issuing the STOP_TRANS command. The procedure is as follows:

1. Read command => response time out
2. Issue STOP_TRANS command => Get Response
3. Read register SDC_DATSTA to clear it

4.11.4.7 Source or Destination Address is not word-aligned

It is possible that the source address is not word-aligned when data move from memory to MSDC. Similarly, destination address may be not word-aligned when data move from MSDC to memory. This can be solved by setting DMA byte-to-word functionality.

1. DMAn_CON.SIZE=0
2. DMAn_CON.BTW=1
3. DMAn_CON.BURST=2 (or 4)
4. DMAn_COUNT=byte number instead of word number
5. fifo threshold setting must be 1 (or 2), depending on DMAn_CON.BURST

Note n=4 ~ 11

4.11.4.8 Miscellaneous notes

- Siemens MMC card: When a write command is issued and followed by a STOP_TRANS command, Siemens MMC card will de-assert busy status even though flash programming has not yet finished. Software must use "Get Status" command to make sure that flash programming finishes.

MediaTek Confidential Release for Cenon WCX

This document contains information that is proprietary to MediaTek Inc.

Unauthorized reproduction or disclosure of this information in whole or in part is strictly prohibited.

MediaTek Confidential Release for Cenon WCX

MediaTek Confidential Release for Cenon WCX

This document contains information that is proprietary to MediaTek Inc.

Unauthorized reproduction or disclosure of this information in whole or in part is strictly prohibited.

5 Multi-Media Subsystem

MT6252 is specially designed to support multi-media terminals. It integrates several hardware based accelerators, like advanced LCD display controller, camera interface, hardware image Resizer and Rotator. This chapter describes those functional blocks in detail.

5.1 LCD Interface

5.1.1 General Description

MT6252H contains a versatile LCD controller which is optimized for multimedia applications. This controller supports many types of LCD modules and contains a rich feature set to enhance the functionality. These features are:

- Up to 240 x 320 resolution
- The internal frame buffer supports 8bpp indexed color, RGB 565, RGB 888, ARGB 8888, PARGB 8888 and YUYV422 format.
- Supports 8-bpp (RGB332), 12-bpp (RGB444), 16-bpp (RGB565), 18-bpp (RGB666) and 24-bpp (RGB888) LCD modules.
- 4 Layers Overlay with individual color depth, window size, vertical and horizontal offset, source key, alpha value and display rotation control(90°,180°, 270°, mirror and mirror then 90°, 180° and 270°)

For parallel LCD modules, the LCD controller can reuse external memory interface or use dedicated 8/9-bit parallel interface to access them and 8080 type interface is supported. It can transfer the display data from the internal SRAM or external SRAM/Flash Memory to the off-chip LCD modules. Additionally, when used with page-mode pSRAM, the LCM may be connected to the EMI to share pins. The LCD controller can be set to update pixel data to this interface.

For serial LCD modules, this interface performs parallel to serial conversion and supports 8, 9, 16, 18, 24 and 32 bit interfaces. The serial interface may use four pins – LSCE#, LSDA, LSCK and LSA0 or three pins – LSCE#, LSDA, LSCK to enter commands and data. In 3 wire mode, an extra bit representing the LSA0 pin is transferred before the MSB of each transaction

MediaTek Confidential Release for Cenon WCX
MediaTek Confidential Release for Cenon WCX

This document contains information that is proprietary to MediaTek Inc.

Unauthorized reproduction or disclosure of this information in whole or in part is strictly prohibited.

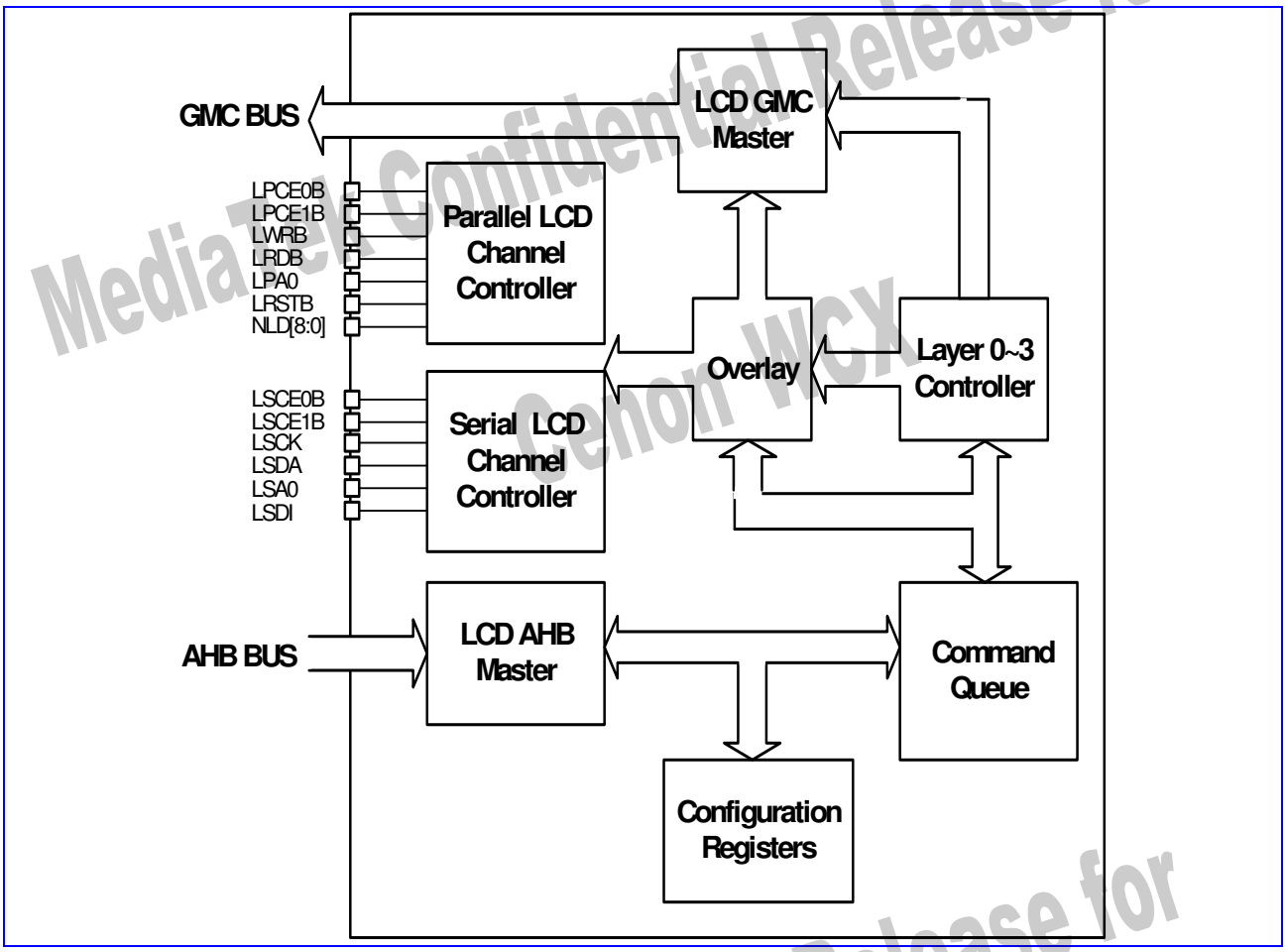

Figure 42 LCD Interface Block Diagram

LCD = 0x9000_0000

Address	Register Function	Width	Acronym
9000_0000h	LCD Interface Status Register	16	**LCD_STA**
9000_0004h	LCD Interface Interrupt Enable Register	16	**LCD_INTEN**
9000_0008h	LCD Interface Interrupt Status Register	16	**LCD_INTSTA**
9000_000Ch	LCD Interface Frame Transfer Register	16	**LCD_START**
9000_0010h	LCD Parallel/Serial LCM Reset Register	16	**LCD_RSTB**

MediaTek Confidential Release for Cenon WCX

This document contains information that is proprietary to MediaTek Inc.

Unauthorized reproduction or disclosure of this information in whole or in part is strictly prohibited.

9000_0020h	LCD Serial Interface Write Timing Register	32	**LCD_SCNF_WR**
9000_0024h	LCD Serial Interface Read Timing Register	32	**LCD_SCNF_RD**
9000_0028h	LCD Serial Interface Configuration Register	32	**LCD_SCNF**
9000_002Ch	LCD Serial Interface Chip Select Register	32	**LCD_SCNF_CS**
9000_0030h	LCD Parallel Interface 0 Configuration Register	32	**LCD_PCNF0**
9000_0034h	LCD Parallel Interface 1 Configuration Register	32	**LCD_PCNF1**
9000_003Ch	LCD Parallel Interface Size Configuration Register	16	**LCD_PDW**
9000_0050h	LCD Tearing Control Register	32	**LCD_TECON**
9000_0054h	LCD GMC Port Throttle Register	32	**LCD_GMCCON**
9000_0060h	LCD ROI Window Write to Memory Address Register	32	**LCD_WROI_W2MADD**
9000_0064h	LCD Calculation HTT Counter Register	32	**LCD_CALC_HTT**
9000_0068h	LCD Sync LCM Size Register	32	**LCD_SYNC_LCM_SIZE**
9000_006ch	LCD Sync Counter Register	32	**LCD_SYNC_CNT**
9000_0070h	LCD ROI Window Write to Memory Pitch Register	16	**LCD_W2M_PITCH**
9000_0074h	LCD ROI Window Write to Memory Offset Register	32	**LCD_WROI_W2MOFS**
9000_0078h	LCD ROI Window Write to Memory Control Register	16	**LCD_WROI_W2MCON**
9000_007Ch	LCD Palette Address Register	32	**LCD_PAL_ADD**
9000_0080h	LCD ROI Window Control Register	32	**LCD_WROICON**
9000_0084h	LCD ROI Window Offset Register	32	**LCD_WROIOFS**
9000_0088h	LCD ROI Window Command Address Register	16	**LCD_WROICADD**
9000_008ch	LCD ROI Window Data Address Register	16	**LCD_WROIDADD**
9000_0090h	LCD ROI Window Size Register	32	**LCD_WROISIZE**
9000_009Ch	LCD ROI Window Background Color Register	32	**LCD_WROI_BGCLR**

MediaTek Confidential Release for Cenon WCX

This document contains information that is proprietary to MediaTek Inc.

Unauthorized reproduction or disclosure of this information in whole or in part is strictly prohibited.

9000_00A0h	LCD Write to LCM Continuous Count	32	**LCD_WROI_CONTI**
9000_00B0h	LCD Layer 0 Window Control Register	32	**LCD_L0WINCON**
9000_00B4h	LCD Layer 0 Color Key Register	32	**LCD_L0WINKEY**
9000_00B8h	LCD Layer 0 Window Display Offset Register	32	**LCD_L0WINOFS**
9000_00BCh	LCD Layer 0 Window Display Start Address Register	32	**LCD_L0WINADD**
9000_00C0h	LCD Layer 0 Window Size	32	**LCD_L0WINSIZE**
9000_00C4h	LCD Layer 0 Scroll Start Offset	32	**LCD_L0WINSCRL**
9000_00C8h	LCD Layer 0 Memory Offset	32	**LCD_L0WINMOFS**
9000_00CCh	LCD Layer 0 Memory Pitch	16	**LCD_L0WINPITCH**
9000_00E0h	LCD Layer 1 Window Control Register	32	**LCD_L1WINCON**
9000_00E4h	LCD Layer 1 Color Key Register	32	**LCD_L1WINKEY**
9000_00E8h	LCD Layer 1 Window Display Offset Register	32	**LCD_L1WINOFS**
9000_00ECh	LCD Layer 1 Window Display Start Address Register	32	**LCD_L1WINADD**
9000_00F0h	LCD Layer 1 Window Size	32	**LCD_L1WINSIZE**
9000_00F4h	LCD Layer 1 Scroll Start Offset	32	**LCD_L1WINSCRL**
9000_00F8h	LCD Layer 1 Memory Offset	32	**LCD_L1WINMOFS**
9000_00FCh	LCD Layer 1 Memory Pitch	16	**LCD_L1WINPITCH**
9000_0110h	LCD Layer 2 Window Control Register	32	**LCD_L2WINCON**
9000_0114h	LCD Layer 2 Color Key Register	32	**LCD_L2WINKEY**
9000_0118h	LCD Layer 2 Window Display Offset Register	32	**LCD_L2WINOFS**
9000_011Ch	LCD Layer 2 Window Display Start Address Register	32	**LCD_L2WINADD**
9000_0120h	LCD Layer 2 Window Size	32	**LCD_L2WINSIZE**
9000_0124h	LCD Layer 2 Scroll Start Offset	32	**LCD_L2WINSCRL**
9000_0128h	LCD Layer 2 Memory Offset	32	**LCD_L2WINMOFS**
9000_012Ch	LCD Layer 2 Memory Pitch	16	**LCD_L2WINPITCH**
9000_0140h	LCD Layer 3 Window Control Register	32	**LCD_L3WINCON**
9000_0144h	LCD Layer 3 Color Key Register	32	**LCD_L3WINKEY**
9000_0148h	LCD Layer 3 Window Display Offset	32	**LCD_L3WINOFS**

MediaTek Confidential Release for Cenon WCX

This document contains information that is proprietary to MediaTek Inc.

Unauthorized reproduction or disclosure of this information in whole or in part is strictly prohibited.

	Register		
9000_014Ch	LCD Layer 3 Window Display Start Address Register	32	**LCD_L3WINADD**
9000_0150h	LCD Layer 3 Window Size	32	**LCD_L3WINSIZE**
9000_0154h	LCD Layer 3 Scroll Start Offset	32	**LCD_L3WINSCRL**
9000_0158h	LCD Layer 3 Memory Offset	32	**LCD_L3WINMOFS**
9000_015Ch	LCD Layer 3 Memory Pitch	16	**LCD_L3WINPITCH**
9000_0170h	LCD Dither Control Register	32	**LCD_DITHER_CON**
9000_01F0h	LCD Addcon Debug Register	32	**LCD_DB_ADDCON**
9000_01F4h	LCD Maincon Debug Register	32	**LCD_DB_MCON**
9000_01F8h	LCD W2mcon Debug Register	32	**LCD_DB_W2MCON**
9000_01FCh	LCD Frame Counter Debug Register	32	**LCD_DB_COUNT**
9000_4000h	LCD Parallel Interface 0 Command	32	**LCD_PCMD0**
9000_4010h	LCD Parallel IF 0 Command Sync 0	32	**LCD_ PCMD0_SYNC0**
9000_4020h	LCD Parallel IF 0 Command Sync 1	32	**LCD_ PCMD0_SYNC1**
9000_4030h	LCD Parallel IF 0 Command HTT	32	**LCD_ PCMD0_HTT**
9000_4100h	LCD Parallel Interface 0 Data	32	**LCD_PDAT0**
9000_4110h	LCD Parallel IF 0 Data Sync 0	32	**LCD_ PDAT0_SYNC0**
9000_4120h	LCD Parallel IF 0 Data Sync 1	32	**LCD_ PDAT0_SYNC1**
9000_4130h	LCD Parallel IF 0 Data HTT	32	**LCD_ PDAT0_HTT**
9000_5000h	LCD Parallel Interface 1 Command	32	**LCD_PCMD1**
9000_5010h	LCD Parallel IF 1 Command Sync 0	32	**LCD_ PCMD1_SYNC0**
9000_5020h	LCD Parallel IF 1 Command Sync 1	32	**LCD_ PCMD1_SYNC1**
9000_5030h	LCD Parallel IF 1 Command HTT	32	**LCD_ PCMD1_HTT**
9000_5100h	LCD Parallel Interface 1 Data	32	**LCD_PDAT1**
9000_5110h	LCD Parallel IF 1 Data Sync 0	32	**LCD_ PDAT1_SYNC0**
9000_5120h	LCD Parallel IF 1 Data Sync 1	32	**LCD_ PDAT1_SYNC1**
9000_5130h	LCD Parallel IF 1 Data HTT	32	**LCD_ PDAT1_HTT**
9000_8000h	LCD Serial Interface Command	32	**LCD_SCMD**
9000_8010h	LCD Serial IF Command Sync 0	32	**LCD_ SCMD _SYNC0**
9000_8020h	LCD Serial IF Command Sync 1	32	**LCD_ SCMD _SYNC1**
9000_8030h	LCD Serial IF Command HTT	32	**LCD_ SCMD _HTT**

MediaTek Confidential Release for Cenon WCX

This document contains information that is proprietary to MediaTek Inc.

Unauthorized reproduction or disclosure of this information in whole or in part is strictly prohibited.

9000_8100h	LCD Serial Interface Data	32	**LCD_SDAT**
9000_8110h	LCD Serial IF Data Sync 0	32	**LCD_ SDAT _SYNC0**
9000_8120h	LCD Serial IF Data Sync 1	32	**LCD_ SDAT _SYNC1**
9000_8130h	LCD Serial IF Data HTT	32	**LCD_ SDAT _HTT**
9000_C000h ~ 9000_C07Fh	LCD Interface Command/Parameter Register	32	**LCD_COMD**

Table 57 Memory map of LCD Interface

5.1.2 Register Definitions

The base address of LCD is 0x9000_0000. Note: All reserved fields in LCD registers should be set to 0.

9000_0000h LCD Interface Status Register LCD_STA

Bit	15	14	13	12	11	10	9	8	7	6	5	4	3	2	1	0
Name											BUSY	WAIT_SYNC	WAIT_HTT	GMC	WAIT_CMDQ	RUN
Type											R	R	R	R	R	R
Reset											0	0	0	0	0	0

RUN LCD Interface start transfer commands and/or pixels.
WAIT_CMDQ LCD is waiting for command queue transfer to complete.
GMC LCD is processing a GMC request
WAIT_HTT LCD is waiting LCD_CALC_HTT.COUNT to reach LCD_CALC_HTT.TIMEOUT.
WAIT_SYNC LCD is waiting for LCM tearing-free sync signal or is counting the set TE delay.
BUSY LCD Interface is busy. If read as 1, this means the LCD may be in the process of waiting for a hardware trigger signal, waiting for tearing signal, sending commands to command queue, or writing pixels to memory/LCM.

9000_0004h LCD Interface Interrupt Enable Register LCD_INTEN

Bit	15	14	13	12	11	10	9	8	7	6	5	4	3	2	1	0

MediaTek Confidential Release for Cenon WCX

This document contains information that is proprietary to MediaTek Inc.

Unauthorized reproduction or disclosure of this information in whole or in part is strictly prohibited.

Name											SYNC	HTT		CMDQ_CPL	REG_CPL	CPL
Type											R/W	R/W		R/W	R/W	R/W
Reset											0	0		0	0	0

LCD interrupt is at interrupt number 16.

CPL Enable the interrupt when LCD frame transfer completes.

REG_CPL Enable the interrupt when LCD has entered transfer command/pixel state.

CMDQ_CPL Enable the interrupt when LCD command transfer completes.

HTT Enable the interrupt when LCD_CALC_HTT.COUNT reaches LCD_CALC_HTT.TIMEOUT.

SYNC Enable the interrupt when LCM tearing-free sync signal arrives and LCD has finished the set TE delay.

9000_0008h LCD Interface Interrupt Status Register LCD_INTSTA

Bit	15	14	13	12	11	10	9	8	7	6	5	4	3	2	1	0
Name											SYNC	HTT		CMDQ_CPL	REG_CPL	CPL
Type											R	R		R	R	R
Reset											0	0		0	0	0

CPL Interrupt of LCD frame transfer completion occurs.

REG_CPL Interrupt when LCD has entered transfer command/pixel state.

CMDQ_CPL Interrupt when LCD command transfer completes.

HTT Interrupt when LCD_CALC_HTT.COUNT reaches LCD_CALC_HTT.TIMEOUT.

SYNC Interrupt of the arrival of LCM tearing-free sync signal occurs and LCD has finished the set TE delay

MediaTek Confidential Release for Cenon WCX

This document contains information that is proprietary to MediaTek Inc.

Unauthorized reproduction or disclosure of this information in whole or in part is strictly prohibited.

LCD Operating States

Below is a state diagram detailing the various states of the LCD controller. State transitions depend on the current hardware trigger and tearing settings. Please consult the table below for detailed explanations.

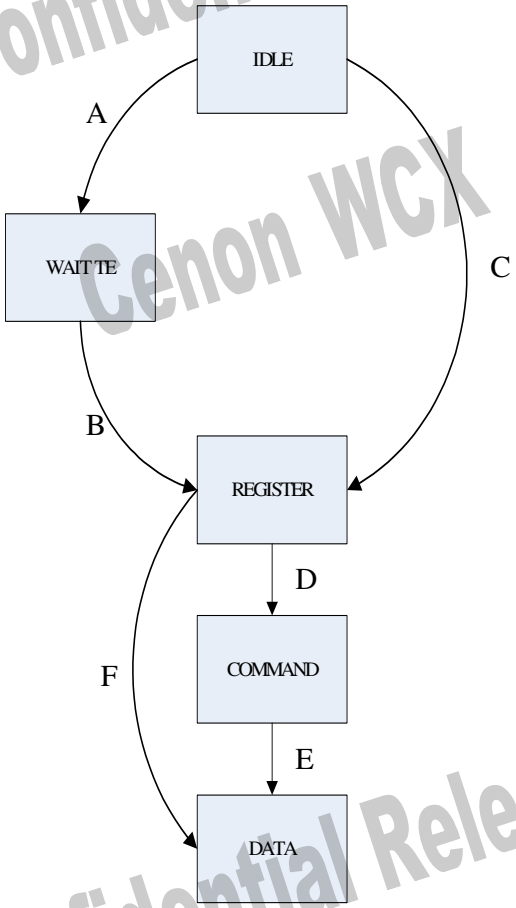

Figure 43 **LCD State Transitions**

State	Action	Exit State	Exit Condition	IRQ	LCD_STA
IDLE	LCD is idle	If te_en = 1, then A; Else C;	LCD_START.START has been changed to 0 from 1.	No IRQ	0x00

MediaTek Confidential Release for Cenon WCX
MediaTek Confidential Release for Cenon WCX

This document contains information that is proprietary to MediaTek Inc.

Unauthorized reproduction or disclosure of this information in whole or in part is strictly prohibited.

WAIT TE	If sync_mode = 0, then LCD is waiting for a tearing edge; If sync_mode = 1, then LCD is waiting for SW to read the scanline port.	Always B	If sync_mode = 0, then LCD must receive a tearing edge and must wait for a period of time; If sync _mode = 1, then SW must read the X_SYNC1 scanline port	SYNC	0x30
REGISTER	LCD is setting up register values for use	If command queue is enabled then D; Else F;	LCD will transition in 1T	REG_CPL	0x20
COMMAND	LCD is transferring command queue data to the LCM	Always E	After LCD has finished transferring all command queue data.	CMDQ_CPL	0x27
DATA	LCD is transferring ROI data to the LCM	If te_repeat = 1, then WAIT_TE; Else IDLE;	After LCD has finished transferring all ROI data to the LCM.	CPL	0x25

9000_000Ch LCD Interface Frame Transfer Register LCD_START

Bit	15	14	13	12	11	10	9	8	7	6	5	4	3	2	1	0
Name	START															INT_RESET
Type	R/W															R/W
Reset	0															0

START Start Control of LCD Frame Transfer. After LCD is started, please to not write to any other register because LCD does not have double registers. Only the SW_TE bit may be changed

INT_RESET Internal reset

0 Not reset.

1 Reset.

MediaTek Confidential Release for Cenon WCX

This document contains information that is proprietary to MediaTek Inc.

Unauthorized reproduction or disclosure of this information in whole or in part is strictly prohibited.

MediaTek Confidential Release for Cenon WCX

9000_0010h LCD Parallel/Serial Interface Reset Register LCD_RSTB

Bit	15	14	13	12	11	10	9	8	7	6	5	4	3	2	1	0
Name																RSTB
Type																R/W
Reset																1

RSTB Parallel/Serial LCD Module Reset Control. It directly control the LRSTB pin.

9000_0020h LCD Serial Interface Write Timing Configuration Register LCD_SCNF_WR

Bit	31	30	29	28	27	26	25	24	23	22	21	20	19	18	17	16
Name							SCL_LOW_COUNT									
Type							R/W	R/W	R/W	R/W	R/W	R/W	R/W	R/W	R/W	R/W
Reset							0	0	0	0	0	0	0	0	0	0
Bit	15	14	13	12	11	10	9	8	7	6	5	4	3	2	1	0
Name							SCL_HIGH_COUNT									
Type							R/W	R/W	R/W	R/W	R/W	R/W	R/W	R/W	R/W	R/W
Reset							0	0	0	0	0	0	0	0	0	0

SCL_HIGH_COUNT Number of clocks plus one to hold the SCL high for every bit transferred during a write cycle.
SCL_LOW_COUNT Number of clocks plus one to hold the SCL low for every bit transferred during a write cycle.

9000_0024h LCD Serial Interface Read Timing Configuration Register LCD_SCNF_RD

Bit	31	30	29	28	27	26	25	24	23	22	21	20	19	18	17	16
Name							SCL_LOW_COUNT									
Type							R/W	R/W	R/W	R/W	R/W	R/W	R/W	R/W	R/W	R/W
Reset							0	0	0	0	0	0	0	0	0	0
Bit	15	14	13	12	11	10	9	8	7	6	5	4	3	2	1	0
Name							SCL_HIGH_COUNT									
Type							R/W	R/W	R/W	R/W	R/W	R/W	R/W	R/W	R/W	R/W
Reset							0	0	0	0	0	0	0	0	0	0

SCL_HIGH_COUNT Number of clocks plus one to hold the SCL high for every bit transferred during a read cycle
SCL_LOW_COUNT Number of clocks plus one to hold the SCL low for every bit transferred during a read cycle

MediaTek Confidential Release for Cenon WCX

This document contains information that is proprietary to MediaTek Inc.

Unauthorized reproduction or disclosure of this information in whole or in part is strictly prohibited.

9000_0028h LCD Serial Interface Configuration Register LCD_SCNF

Bit	31	30	29	28	27	26	25	24	23	22	21	20	19	18	17	16
Name		SDI	3-WIRE													
Type		R/W	R/W													
Reset		0	0													
Bit	15	14	13	12	11	10	9	8	7	6	5	4	3	2	1	0
Name		IF_SIZE														
Type		R/W	R/W	R/W												
Reset		0	0	0												

3-WIRE Enable 3 wire mode. Serial interface will transfer an A0 bit before transferring the MSB of each transaction.

SDI Set to 1 to read data from LSDI pin, otherwise LCD will use the bi-directional LSDA pin.

IF_SIZE Interface size of Serial Interface. Each transaction will transmit this many bits

- **000** 8 bits
- **001** 9 bits
- **010** 16 bits
- **011** 18 bits
- **100** 24 bits
- **101** 32 bits

9000_002Ch LCD Serial Interface Chip Select Configuration Register LCD_SCNF_CS

Bit	31	30	29	28	27	26	25	24	23	22	21	20	19	18	17	16
Name																
Type																
Reset																
Bit	15	14	13	12	11	10	9	8	7	6	5	4	3	2	1	0
Name															CS1	CS0
Type															R/W	R/W
Reset															1	1

CS0 Set Chip Select 0 level. This bit directly controls the LSCE0 pin

CS1 Set Chip Select 1 level. This bit directly controls the LSCE1 pin

MediaTek Confidential Release for Cenon WCX

This document contains information that is proprietary to MediaTek Inc.

Unauthorized reproduction or disclosure of this information in whole or in part is strictly prohibited.

The serial interface can support 4 wire mode or 3 wire mode as shown below. In 3 wire mode, the A0 bit is transferred as part of the data before the MSB. The write and read timing registers can be used to set the timing of the interface. In the diagram below, X = SCL_LOW_COUNT+1 clock cycles and Y = SCL_HIGH_COUNT+1 clock cycles. When a read needs to be done, a write should be sent to the serial interface. Then (without changing CS) a read is performed by reading the serial interface. Notice the write and read may use different timing. The CS pin is controlled by software by writing to the LCD_SCNF_CS register. The LCD 104Mhz clock MUST BE ENABLED to use the Serial Interface.

MediaTek Confidential Release for Cenon WCX

MediaTek Confidential Release for Cenon WCX

This document contains information that is proprietary to MediaTek Inc.

Unauthorized reproduction or disclosure of this information in whole or in part is strictly prohibited.

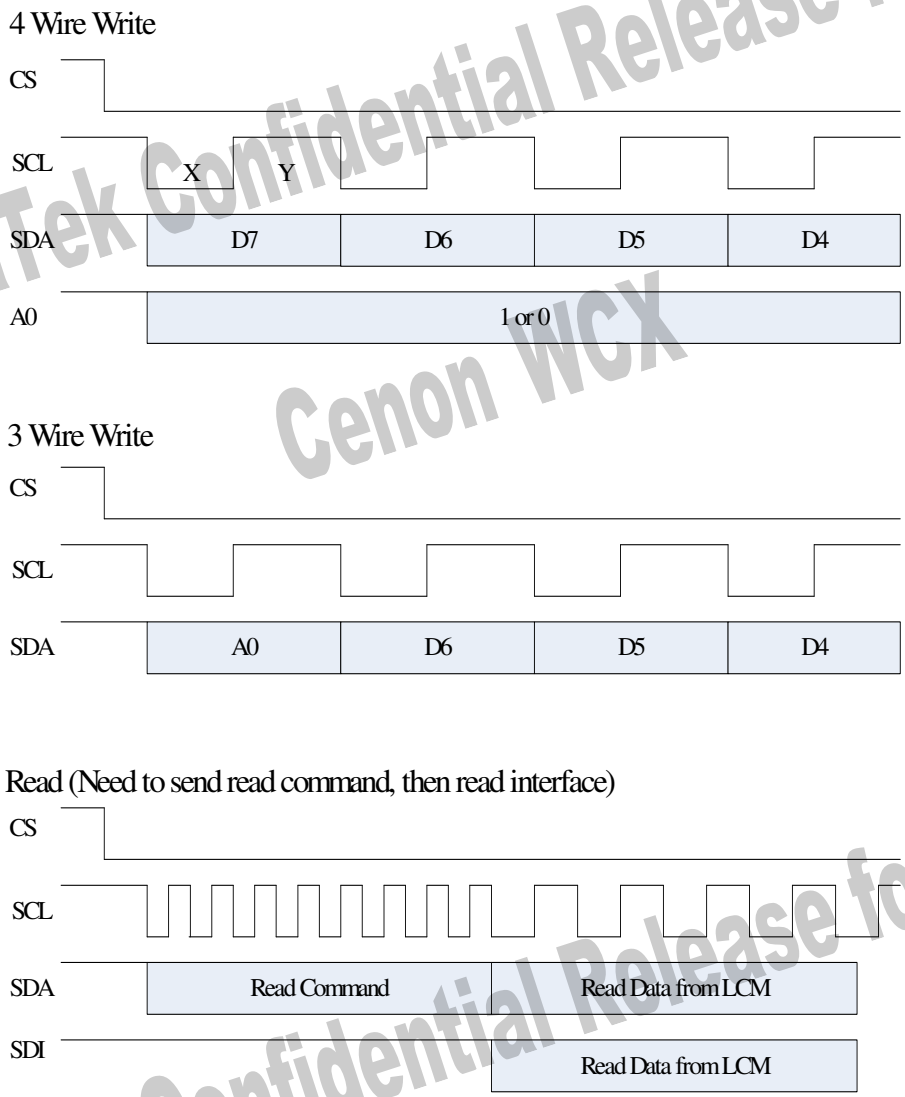

Figure 44 Serial interface timing diagram

9000_0030h LCD Parallel Interface Configuration Register 0 LCD_PCNF0

Bit	31	30	29	28	27	26	25	24	23	22	21	20	19	18	17	16
Name			C2RH		C2RS						RLT					

MediaTek Confidential Release for Cenon WCX

This document contains information that is proprietary to MediaTek Inc.

Unauthorized reproduction or disclosure of this information in whole or in part is strictly prohibited.

Type	R/W	R/W	R/W	R/W	R/W	R/W	R/W	R/W	R/W	R/W	R/W	R/W	R/W	R/W	R/W	R/W
Reset	0	0	0	0	0	0	0	0	0	0	0	0	0	0	0	0
Bit	15	14	13	12	11	10	9	8	7	6	5	4	3	2	1	0
Name			C2WH		C2WS				WST							
Type	R/W	R/W	R/W	R/W	R/W	R/W	R/W	R/W	R/W	R/W	R/W	R/W	R/W	R/W	R/W	R/W
Reset	0	0	0	0	0	0	0	0	0	0	0	0	0	0	0	0

WST Write Wait State Time, see Figure 45.
C2WS Chip Select (LPCEB0) to Write Strobe (LWRB) Setup Time, see Figure 45. **C2WS must <= WST.**
C2WH Chip Select (LPCEB0) to Write Strobe (LWRB) Hold Time, see Figure 45.
RLT Read Latency Time. See Figure 46.
C2RS Chip Select (LPCEB0) to Read Strobe (LRDB) Setup Time, see Figure 46. **C2RS must <= RLT.**
C2RH Chip Select (LPCEB0) to Read Strobe (LRDB) Hold Time, see Figure 46.

9000_0034h LCD Parallel Interface Configuration Register 1 LCD_PCNF1

Bit	31	30	29	28	27	26	25	24	23	22	21	20	19	18	17	16
Name			C2RH		C2RS						RLT					
Type	R/W	R/W	R/W	R/W	R/W	R/W	R/W	R/W	R/W	R/W	R/W	R/W	R/W	R/W	R/W	R/W
Reset	0	0	0	0	0	0	0	0	0	0	0	0	0	0	0	0
Bit	15	14	13	12	11	10	9	8	7	6	5	4	3	2	1	0
Name			C2WH		C2WS						WST					
Type	R/W	R/W	R/W	R/W	R/W	R/W	R/W	R/W	R/W	R/W	R/W	R/W	R/W	R/W	R/W	R/W
Reset	0	0	0	0	0	0	0	0	0	0	0	0	0	0	0	0

WST Write Wait State Time, see Figure 45.
C2WS Chip Select (LPCEB1) to Write Strobe (LWRB) Setup Time, see Figure 45. **C2WS must <= WST.**
C2WH Chip Select (LPCEB1) to Write Strobe (LWRB) Hold Time, see Figure 45.
RLT Read Latency Time. See Figure 46.
C2RS Chip Select (LPCEB1) to Read Strobe (LRDB) Setup Time, see Figure 46. **C2RS must <= RLT.**
C2RH Chip Select (LPCEB1) to Read Strobe (LRDB) Hold Time, see Figure 46.

MediaTek Confidential Release for Cenon WCX

This document contains information that is proprietary to MediaTek Inc.

Unauthorized reproduction or disclosure of this information in whole or in part is strictly prohibited.

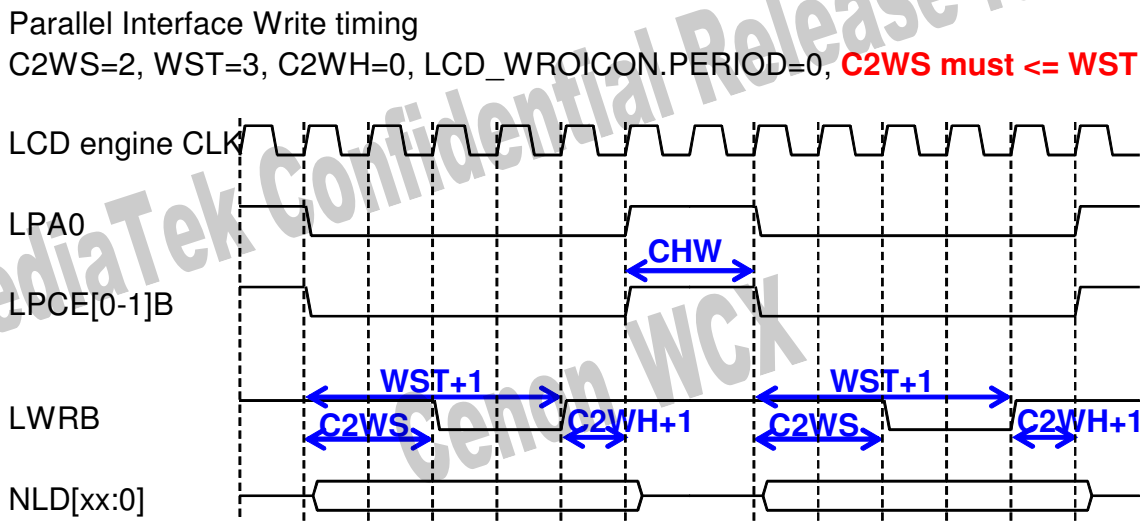

Figure 45 Parallel interface write timing diagram

The time between transactions is CHW = (PERIOD>C2WH) ? PERIOD+1-C2WH : 1.

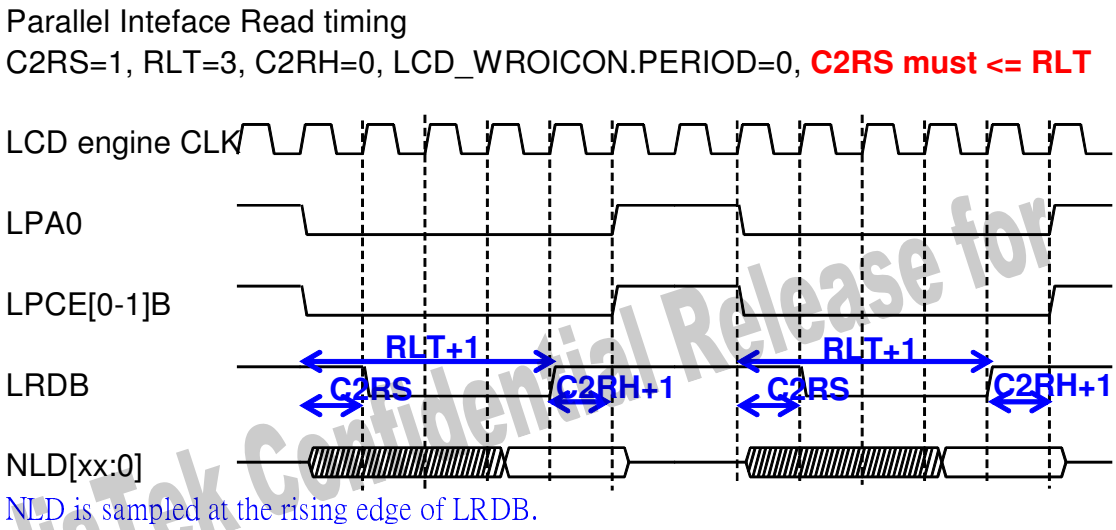

Figure 46 Parallel interface read timing diagram

MediaTek Confidential Release for Cenon WCX

This document contains information that is proprietary to MediaTek Inc.

Unauthorized reproduction or disclosure of this information in whole or in part is strictly prohibited.

9000_003Ch LCD Parallel Interface Data Width Configuration Register LCD_PDW

Bit	15	14	13	12	11	10	9	8	7	6	5	4	3	2	1	0
Name										P1_DW				P0_DW		
Type										R/W	R/W	R/W		R/W	R/W	R/W
Reset										0	0	0		0	0	0

P0_DW Data width of parallel interface 0

- **000** 8 bit
- **001** 9 bit
- **010** 16 bit
- **others** Reserved

P1_DW Data width of parallel interface 1

- **000** 8 bit
- **001** 9 bit
- **010** 16 bit
- **others** Reserved

LCD GPIO Table

IO Name	Aux Function	LCD Function
KCOL7	4	LSCK
KROW6	4	LSDA
KROW3	4	LSA0
KROW2	4	LSCK
KROW1	4	LSDA
KROW0	4	LSDI
SD_PWREN	3	LSCE1B
URXD1	2	LSCK
UTXD1	2	LSDA

MediaTek Confidential Release for Cenon WCX

This document contains information that is proprietary to MediaTek Inc.

Unauthorized reproduction or disclosure of this information in whole or in part is strictly prohibited.

UCTS1_B	3	NLD13
URTS1_B	3	NLD14
MCINS	3	NLD15
EA24	3	LPCE0B
EA23	3	LSCE0B
EA15	1	NLD12
EA14	1	NLD12
EA13	1	NLD10
EA12	1	NLD9
EA11	1	NLD8
EA10	1	NLD7
EA9	1	NLD6
EA8	1	NLD5
EA7	1	NLD4
EA6	1	NLD3
EA5	1	NLD2
EA4	1	NLD1
EA3	1	NLD0
EA2	1	LWR_B
EA1	1	LRD_B
EA0	1	LPA0
EA6	2	LSDI

MediaTek Confidential Release for Cenon WCX
MediaTek Confidential Release for Cenon WCX

This document contains information that is proprietary to MediaTek Inc.

Unauthorized reproduction or disclosure of this information in whole or in part is strictly prohibited.

EA5	2	LSDA
EA4	2	LSA0
EA3	2	LSCK
ECS3_B	2	LPCE1_B
ECS3_B	3	LSCE1_B
ECS2_B	1	CORE_ECS2_B
ECS2_B	2	LPCE0_B
ECS2_B	3	LSCE0_B
ED7	3	LPCE1_B
ED6	3	LSCE1_B
LPTE	1	LPTE
LRSTB	1	LRSTB
CMDAT1	2	LSDA
CMPDN	2	LSCK
SCK	2	LSCK
SWP	2	LSA0
SHOLD	2	LSCE0_B
SCS	2	LSCE1_B
SIN	2	LSDI
SOUT	2	LSDA

MediaTek Confidential Release for Cenon WCX

TE Signal Polarity

This document contains information that is proprietary to MediaTek Inc.

Unauthorized reproduction or disclosure of this information in whole or in part is strictly prohibited.

TE_EDGE_SEL can be used to select TE polarity for TE signal detection.

TE_EDGE_SEL value	TE signal detection
0	Detect a TE signal at its rising edge. This setting is for active high TE signal.
1	Detect a TE signal at its falling edge. This setting if for active low TE signal.

Table 58 TE Signal Polarity

Sync Mode 0

In sync mode = 0, LCD will update TE after counting a set number of horizontal sync lines. Each horizontal sync line is set by LCD_SYNC_LCM_SIZE.HTT. After receive a TE edge, LCD will count LCD_SYNC_CNT.WAITLINE number of lines and then begin updating the new frame to the LCM. To use this mode, please follow these steps:

1. Set LCD_TECON.SYNC_MODE = 0
2. Set LCD_SYNC_LCM_SIZE.HTT to the correct size. See below for more information on this.
3. Set LCD_SYNC_CNT.WAITLINE to the number of lines you wish to wait before updating the LCM.
4. Set other registers (ROI, Layer, etc.) and start the LCD controller by setting LCD_START.START = 1 (from 0).

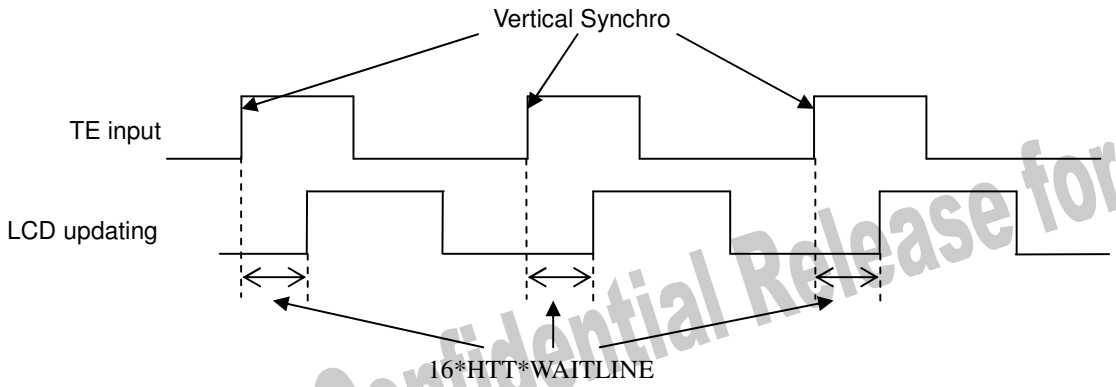

Figure 47 SYNC_MODE = 0

Sync Mode 1

In sync mode 1, LCD will not use the TE pin to detect the LCM scan line position. Instead, software must read the LCM scan line from the LCM register. When software reads a specified port, LCD will interpret this and automatically

MediaTek Confidential Release for Cenon WCX

This document contains information that is proprietary to MediaTek Inc.

Unauthorized reproduction or disclosure of this information in whole or in part is strictly prohibited.

begin its internal TE counter at the read LCM scan line position. Scan line 0 indicates the beginning of VSYNC as shown in the figure below. The LCD ROI begins during the V active region (vact).

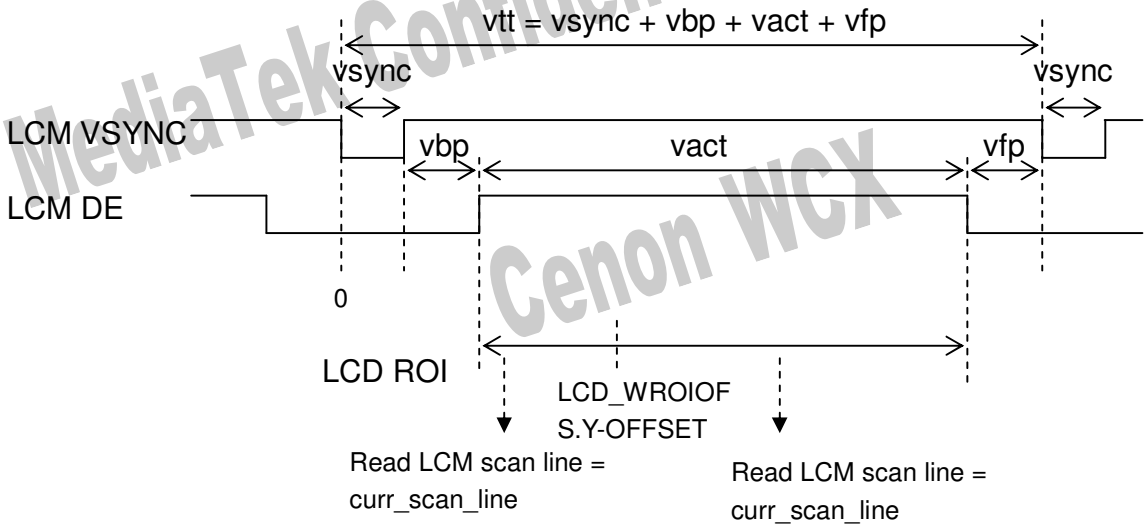

Figure 48 **LCM Scan Line Timing**

Typically, the scan line register is divided into 2 parameters and 1 dummy read. To read the current LCM scan line, software uses the following steps: (assume the LCM is on Parallel CS0)

1. Set LCD_SYNC_LCM.VTT size to the number of LCM scan lines including blanking.
2. Set LCD_SYNC_LCM.HTT to the correct timing parameter. See below for more information on this.
3. Set LCD_SYNC_CNT.WAITLINE to the LCM scan line you wish to start updating the frame.
4. Start the LCD by setting LCD_START.START = 1 (from 0).
5. Write Scan line command to port 0x4000 or 0x4100.
6. If the LCM needs a dummy read, then read port 0x4000 or 0x4100. This step can be skipped if no dummy read is required.
7. Read port 0x4010 or 0x4110 to latch the first parameter into the LCM internal counter.

MediaTek Confidential Release for Cenon WCX

This document contains information that is proprietary to MediaTek Inc.

Unauthorized reproduction or disclosure of this information in whole or in part is strictly prohibited.

8. Read port 0x4020 or 0x4120 to latch the second parameter into the LCM internal counter and begin the TE counter. SW must use an 8 bit read for this parameter or else the top byte will be covered. If the IF size is greater then 8/9 bits and there is only 1 parameter to read, the SW may skip step 6 and only use step 7. In this case, SW may use a 16 or 32 bit read to this port.
9. If you need to read another port then substitute the port number for the "4" in 0x4XXX. All ports can support this feature except the LCM on EMI port (0x6XXX). The "1" in 0x4100 indicates the A0 bit will be 1 when the read/write transaction is issued. Please confirm with the LCM datasheet to determine which port is appropriate.

In the figure below, the LCM has 240 total horizontal lines including blanking. Assume we want LCD to begin updating at Point A because the partial update begins at this point. In this case, we should set VTT = 240 and WAITLINE = 3. When SW takes steps 6 and 7 above, assume the returned value is Point B. This means the TE internal counter will count up to Line 239 and loop back to 0. The counter will count until Point A is reached and then begin updating the LCM. Note that Line 0 is typically not within the active LCM region.

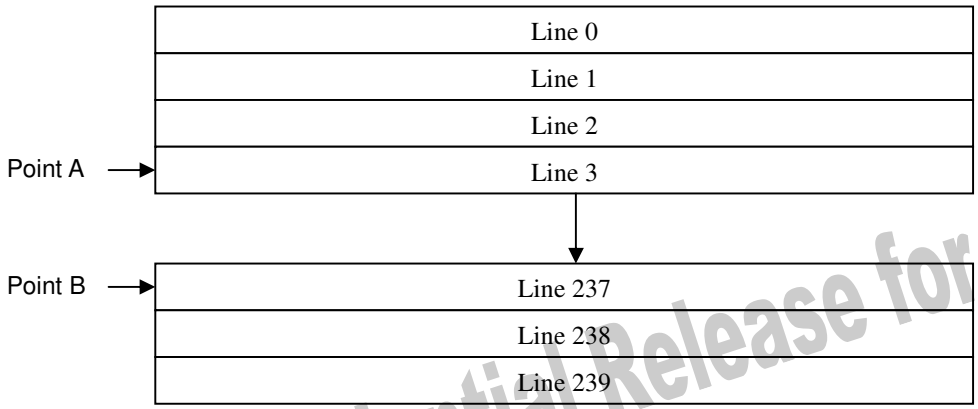

Figure 49 **TE Scan Line Example**

Name	Function
X_SYNC0	Latches the first parameter of the LCM scan line into the TE counter.
X_SYNC1	Latches the second parameter of the LCM scan line into the TE counter and begin the

MediaTek Confidential Release for Canon WCX

This document contains information that is proprietary to MediaTek Inc.

Unauthorized reproduction or disclosure of this information in whole or in part is strictly prohibited.

	counter.
X_HTT	Read once to begin HTT calculation. Read again to stop the calculation. This can only be used when LCD is idle.

Table 59 **LCD TE Ports**

HTT Calibration

The HTT parameter can be calculated from the LCM datasheet. However, if SW wants a more automatic method to calculate HTT, then SW can use the LCD TE counters. The steps are as follows:

1. Make sure LCD is in the IDLE state (LCD_START.START = 0 and LCD_STA = 0).
2. Set HTT = 256.
3. Set LCD_CALC_HTT.TIMEOUT to 128.
4. Enable the HTT calculation interrupt LCD_INTEN.HTT
5. To start the calculation, read the port 0x4030 or 0x4130 (depending on desired A0, assuming Parallel CS0). Note this will immediately start the calculation, so if there are many parameters to read, this port must be read last.
6. LCD will begin counting cycles. When LCD_CALC_HTT.COUNT reaches TIMEOUT, LCD will issue an interrupt. Software should read port 0x4030 or 0x4130 to stop the TE counters. Again, this port should be read last if there are many parameters to read.
7. Assume the first scan line read is SE0 and the second is SE1. Then the correct HTT value is:

   HTT = (COUNT*256) / (SE1 – SE0)

9000_0050h LCD Tearing Control Register LCD_TECON

Bit	31	30	29	28	27	26	25	24	23	22	21	20	19	18	17	16
Name																
Type	R/W	R/W	R/W	R/W	R/W	R/W	R/W	R/W	R/W	R/W	R/W	R/W	R/W	R/W	R/W	R/W
Reset	0	0	0	0	0	0	0	0	0	0	0	0	0	0	0	0
Bit	15	14	13	12	11	10	9	8	7	6	5	4	3	2	1	0
Name	SW_TE												TE_REPEAT	SYNC_MODE	TE_EDGE_SEL	SYNC_EN
Type	R/W	R/W	R/W	R/W	R/W	R/W	R/W	R/W	R/W	R/W	R/W	R/W	R/W	R/W	R/W	R/W
Reset	0	0	0	0	0	0	0	0	0	0	0	0	0	0	0	0

SYNC_EN Enable sync control. LCD controller will synchronize to LCM refresh timing.

MediaTek Confidential Release for Cenon WCX

This document contains information that is proprietary to MediaTek Inc.

Unauthorized reproduction or disclosure of this information in whole or in part is strictly prohibited.

TE_EDGE_SEL Select TE edge.

- **0** Rising edge
- **1** Falling edge

SYNC_MODE Sync control mode.

- **0** TE signaling mode. LCD starts to update LCM after receiving TE edge and plus a delay specified by LCD_working_clock_cycle_time*16*LCD_SYNC_CNT.HTT*LCD_SYNC_CNT.LINES in unit of ns. LCD_working_clock_cycle_time is 19.2ns.
- **1** Read LCM current scan line mode. LCD starts to update LCM after LCD_START.START is set to 1 from 0 and plus a delay specified by LCD_working_clock_cycle_time*16*LCD_SYNC_CNT.HTT*LCD_SYNC_CNT.LINES in unit of ns. LCD_working_clock_cycle_time is 19.2ns.

TE_REPEAT Repeat mode.

- **0** update LCM once every TE signal coming.
- **1** repeat updating LCM after TE signal coming.

SW_TE Software emulated TE signal. Write this bit from 0 to 1 will let LCD act like a TE signal received.

9000_0054h LCD GMC Port Control Register LCD_GMCCON

Bit	31	30	29	28	27	26	25	24	23	22	21	20	19	18	17	16
Name	THROTTLE_PERIOD															
Type	R/W	R/W	R/W	R/W	R/W	R/W	R/W	R/W	R/W	R/W	R/W	R/W	R/W	R/W	R/W	R/W
Reset	0	0	0	0	0	0	0	0	0	0	0	0	0	0	0	0
Bit	15	14	13	12	11	10	9	8	7	6	5	4	3	2	1	0
Name												THROTTLE_EN		MAX_BURST		
Type												R/W		R/W	R/W	R/W
Reset												0		0	1	0

MAX_BURST Specify the maximum burst length of GMC request.

- **000** Single 4 bytes access
- **010** Burst 4 beats access and one beat is 4 bytes. Total data amount is 16 bytes per access.
- **011** Burst 8 beats access and one beat is 4 bytes. Total data amount is 32 bytes per access.
- **Others** Burst 4 beats access and one beat is 4 bytes. Total data amount is 16 bytes per access.

THROTTLE_EN Enable GMC port throttling.

THROTTLE_PERIOD Throttle down LCD GMC port access speed. It specifies how many AHB bus cycles between two GMC requests. There is a down counter, throttle_cnt, to count down for the interval between two

MediaTek Confidential Release for Cenon WCX

This document contains information that is proprietary to MediaTek Inc.

Unauthorized reproduction or disclosure of this information in whole or in part is strictly prohibited.

GMC requests. It counts from THROTTLE_PERIOD when lcd_greq rising to zero, and the next GMC request is allowed to issue when throttle_cnt=0. Please see Figure 50. The maximum GMC bandwidth is limited to

$$\frac{\text{bytes_per_GMC_access}\times 1000}{\text{throttle_period}\times\text{AHB_cycle_time(ns)}}=\frac{\text{bytes_per_GMC_access}\times 1000}{\text{throttle_period}\times 19.2\text{(ns)}}\text{MBytes/sec}$$

Bytes_per_GMC_access is specified by MAX_BURST.

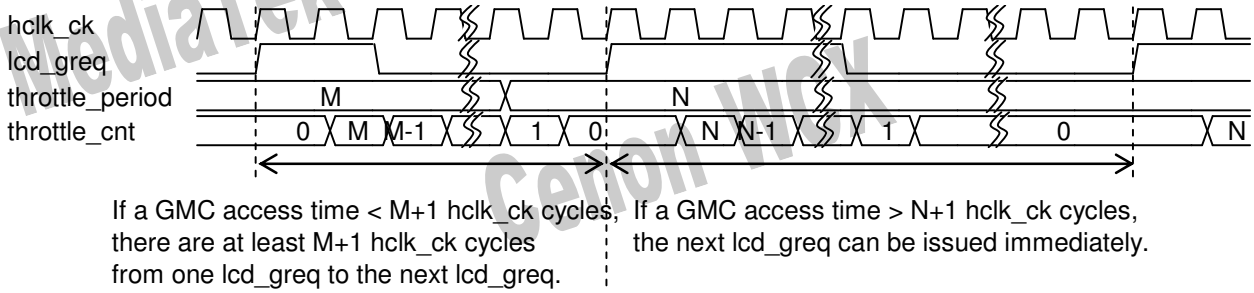

Figure 50 **GMC throttle mechanism**

9000_0060h Region of Interest Window Write to Memory Address FB Register LCD_WROI_W2MADD

Bit	31	30	29	28	27	26	25	24	23	22	21	20	19	18	17	16
Name	W2M_ADDR															
Type	R/W															
Bit	15	14	13	12	11	10	9	8	7	6	5	4	3	2	1	0
Name	W2M_ADDR															
Type	R/W															

W2M_ADDR Write to memory address (byte address) for Frame Buffer, please see Figure 52. The address must be aligned according to the table below. Note: If the buffer is Page-size byte aligned, LCD will benefit from a ~2-3% bandwidth increase. For example, if the page size of the memory is 16bytes, then a 16byte alignment address will increase bandwidth.

LCD_WROI_W2MCON.W2MFORMAT	Color format	ADDR alignment
00	RGB565	2 bytes alignment
01	RGB888	no alignment constraint

MediaTek Confidential Release for Cenon WCX

This document contains information that is proprietary to MediaTek Inc.

Unauthorized reproduction or disclosure of this information in whole or in part is strictly prohibited.

10	Constant A + RGB	4 bytes alignment
11	Pixel A + RGB	4 bytes alignment

9000_0064h LCD Calculation HTT Counter Register

LCD_CALC_HTT

Bit	31	30	29	28	27	26	25	24	23	22	21	20	19	18	17	16
Name					COUNT											
Type	R/W	R/W	R/W	R/W	R	R	R	R	R	R	R	R	R	R	R	R
Reset	0	0	0	0	0	0	0	0	0	0	0	0	0	0	0	0
Bit	15	14	13	12	11	10	9	8	7	6	5	4	3	2	1	0
Name					TIMEOUT											
Type	R/W	R/W	R/W	R/W	R/W	R/W	R/W	R/W	R/W	R/W	R/W	R/W	R/W	R/W	R/W	R/W
Reset	0	0	0	0	0	0	0	0	0	0	0	0	0	0	0	1

COUNT COUNT will begin counting when the port X_HTT is read. Reading this port indicates software want to calibrate for HTT. Reading this port again will stop COUNT.

TIMEOUT Specify the time interval from timeout counter starting to timeout interrupt issuing. When COUNT reaches this number, LCD will issue an interrupt. This is only used for HTT calculation. TIMEOUT must be >0.

900A_0068h LCD Sync LCM Size Register

LCD_SYNC_LCM_SIZE

Bit	31	30	29	28	27	26	25	24	23	22	21	20	19	18	17	16
Name					VTT											
Type	R/W	R/W	R/W	R/W	R/W	R/W	R/W	R/W	R/W	R/W	R/W	R/W	R/W	R/W	R/W	R/W
Reset	0	0	0	0	0	0	0	0	0	0	0	0	0	0	0	1
Bit	15	14	13	12	11	10	9	8	7	6	5	4	3	2	1	0
Name					HTT											
Type	R/W	R/W	R/W	R/W	R/W	R/W	R/W	R/W	R/W	R/W	R/W	R/W	R/W	R/W	R/W	R/W
Reset	0	0	0	0	0	0	0	0	0	0	0	0	0	0	0	1

VTT The total number of horizontal lines on the LCM including blanking lines. VTT must be >0

HTT Indicates how long a LCM horizontal sync is in units of 16*T, where T is the cycle time. Cycle time is 19.2 ns. HTT must be >0.

MediaTek Confidential Release for Cenon WCX

This document contains information that is proprietary to MediaTek Inc.

Unauthorized reproduction or disclosure of this information in whole or in part is strictly prohibited.

9000_006Ch LCD Sync Counter Register LCD_SYNC_CNT

Bit	31	30	29	28	27	26	25	24	23	22	21	20	19	18	17	16
Name					SCANLINE											
Type	R/W	R/W	R/W	R/W	R	R	R	R	R	R	R	R	R	R	R	R
Reset	0	0	0	0	0	0	0	0	0	0	0	0	0	0	0	0
Bit	15	14	13	12	11	10	9	8	7	6	5	4	3	2	1	0
Name					WAITLINE											
Type	R/W	R/W	R/W	R/W	R/W	R/W	R/W	R/W	R/W	R/W	R/W	R/W	R/W	R/W	R/W	R/W
Reset	0	0	0	0	0	0	0	0	0	0	0	0	0	0	0	1

SCANLINE
WAITLINE

Indicates the current TE counter value.
SCANLINE will count until it reaches this value, a TE interrupt will be issued (if enabled) and LCD will begin updating the new frame. In TE SYNC MODE 0, this value is the number of lines to delay LCD update. In TE SYNC MODE1, this value is the scan line SW wishes LCD to update the frame. WAITLINE must be >0.

9000_0070h Region of Interest Window Write to Memory Pitch Register LCD_W2M_PITCH

Bit	15	14	13	12	11	10	9	8	7	6	5	4	3	2	1	0
Name	PITCH															
Type	R/W	R/W	R/W	R/W	R/W	R/W	R/W	R/W	R/W	R/W	R/W	R/W	R/W	R/W	R/W	R/W

PITCH Write to memory pitch in unit of byte, please see Figure 52. The pitch divided by the write to memory bpp must be equal or greater then the ROI width. If the write to memory bpp is 4, then the pitch must be divisible by 4. If the write to memory bpp is 2, then the pitch must be divisible by 2. If the write to memory bpp is 3 (RGB888), then the pitch may be any number greater then the ROI width * 3.

9000_0074h Region of Interest Window Write to Memory Offset Register LCD_WROI_W2MOFS

Bit	31	30	29	28	27	26	25	24	23	22	21	20	19	18	17	16
Name						Y-OFFSET										
Type						R/W										
Bit	15	14	13	12	11	10	9	8	7	6	5	4	3	2	1	0
Name						X-OFFSET										

MediaTek Confidential Release for Cenon WCX

This document contains information that is proprietary to MediaTek Inc.

Unauthorized reproduction or disclosure of this information in whole or in part is strictly prohibited.

Type						R/W

This control register is used to specify the offset of the ROI window from the LCD_WROI_W2MADDR when writing the ROI window's content to memory.

X-OFFSET the x offset of ROI window in the destination memory, please see Figure 52.

Y-OFFSET the y offset of ROI window in the destination memory, please see Figure 52.

9000_0078h Region of Interest Window Write to Memory Control Register LCD_WROI_W2MCON

Bit	31	30	29	28	27	26	25	24	23	22	21	20	19	18	17	16
Name																
Type																
Reset																
Bit	15	14	13	12	11	10	9	8	7	6	5	4	3	2	1	0
Name	OUTPUT_ALPHA								EMI2LCM_BANK		WR_ULTR	ADDINC_DISABLE	RD_ULTRA	W2M_FORMAT		W2LCM
Type	R/W								R/W		R/W	R/W	R/W	R/W		R/W
Reset	0xff								0		0	0	0	0		0

This control register is effective only when the W2M bit is set in LCD_WROICON register.

W2LCM Write to LCM simultaneously. It is effective only when LCD_WROICON.W2M=1.

- **0** Not output to LCM, only write to memory.
- **1** Output to LCM and write to memory.

LCD_WROICON.W2M, LCD_WROI_W2MCON.W2LCM possible combinations

0x only output LCM
10 only output memory
11 output LCM and memory

W2M_FORMAT Write to memory format.

- **00** RGB565
- **01** RGB888
- **10** ARGB8888, alpha value is a constant specified by OUTPUT_ALPHA

MediaTek Confidential Release for Cenon WCX

This document contains information that is proprietary to MediaTek Inc.

Unauthorized reproduction or disclosure of this information in whole or in part is strictly prohibited.

11 ARGB8888, alpha value is calculated by blending equation. When using this mode, all layers enabled must have color depth ARGB8888/PARGB8888

ADDINC_DISABLE Disable address increasing when writing to memory. Always write to the same address.
RD_ULTRA Enable LCD issue ultra GMC request for layer frame buffer read.
WR_ULTRA Enable LCD issue ultra GMC request for LCM on EMI write only. LCD does not issue ultra GMC request for W2M requests
EMI2LCM_BANK Choose the bank number that the LCM is connected to on EMI. Only used for LCM on EMI interface. Value 2'b00 represents CS0, 2'b01 is CS1 and so on. The LCM is typically placed on CS2 (2'b10). When using this interface, the interface size is set at LCD_WROICON.

.

When the LCM is placed on the EMI bus, software must access EMI to direct access LCM (not 0x9000_6000). The access location is as follows:

Address	EMI Bank	Action
0x0000_0000	Bank 0	Access Bank 0 with A0 = 0
0x0000_0002	Bank 0	Access Bank 0 with A0 = 1
0x0800_0000	Bank 1	Access Bank 1 with A0 = 0
0x0800_0002	Bank 1	Access Bank 1 with A0 = 1
0x1000_0000	Bank 2	Access Bank 2 with A0 = 0
0x1000_0002	Bank 2	Access Bank 2 with A0 = 1
0x1800_0000	Bank 3	Access Bank 3 with A0 = 0
0x1800_0002	Bank 3	Access Bank 3 with A0 = 1

9000_007Ch LCD Palette Address Register LCD_PAL_ADD

Bit	31	30	29	28	27	26	25	24	23	22	21	20	19	18	17	16
Name	PAL_ADDR															
Type	R/W															
Bit	15	14	13	12	11	10	9	8	7	6	5	4	3	2	1	0
Name	PAL_ADDR															
Type	R/W															

MediaTek Confidential Release for Cenon WCX

This document contains information that is proprietary to MediaTek Inc.

Unauthorized reproduction or disclosure of this information in whole or in part is strictly prohibited.

PAL_ADDR Address of palette placed in memory used for 8bpp indexed color . The palette should have 256 RGB565 entries and the address should be 2 byte aligned.

9000_0080h Region of Interest Window Control Register — LCD_WROICON

Bit	31	30	29	28	27	26	25	24	23	22	21	20	19	18	17	16
Name	EN0	EN1	EN2	EN3		FCNT		SEND_RES_MOD	PERIOD							
Type	R/W	R/W	R/W	R/W		R/W		R/W	R/W	R/W	R/W	R/W	R/W	R/W	R/W	R/W
Bit	15	14	13	12	11	10	9	8	7	6	5	4	3	2	1	0
Name	ENC	W2M		COMMAND					FORMAT							
Type	R/W	R/W		R/W					R/W							

FORMAT LCD Module Data Format, see Table 60.

Bit 0 : Sequence

0 BGR sequence.

1 RGB sequence.

Bit 1 : Significance.

Bit 2 : Padding.

0 Padding bits on LSBs.

1 Padding bits on MSBs.

Bit 5-3 : Color format

000 for RGB332, 001 for RGB444, 010 for RGB565, 011 for RGB666, 100 for RGB888.

Bit 7-6 : Interface width

00 for 8-bit interface, 01 for 16-bit interface, 10 for 9-bit interface, 11 for 18-bit interface.

COMMAND Number of Commands to be sent to LCD module. Maximum is 31.

W2M Enable Write to Memory. ROI column and/or row size cannot be 0 if write to memory is enabled.

ENC Command Transfer Enable Control.

0 Only send pixel data to LCM, not send commands in command queue.

1 Send commands in command queue first, and then send pixel data to LCM. The number of commands to be sent is specified by COMMAND, and the command queue to be sent is specified by COM_SEL.

PERIOD Waiting period between two consecutive transfers, effective for both data and command.

MediaTek Confidential Release for Cenon WCX

This document contains information that is proprietary to MediaTek Inc.

Unauthorized reproduction or disclosure of this information in whole or in part is strictly prohibited.

SEND_RES_MOD Send the residue odd pixel method. When the output throughput is 2pixels/3cycles, if ROI width is odd, the last pixel of a line is not in any two-pixel-pair; If ROI height is also odd, the last pixel of a frame is not in any two-pixel-pair. This field is used to select the method to transmit the residue odd pixel of a line or of a frame.

0 Send the residue odd pixel per line. In this mode, the last pixel of a line is combined with an extra byte, and sent to LCM. LCD driver should not care this extra byte.

For example, if the ROI's width x height is 3 x 2. The output sequence is

R_0G_0 --- pixel 0 of line 0
B_0R_1
G_1B_1
R_2G_2
B_2R_1 --- LCD driver should not care this R_1.
R_0G_0 --- pixel 0 of line 1
B_0R_1
G_1B_1
R_2G_2
B_2R_1 --- LCD driver should not care this R_1.

1 Send the residue odd pixel per frame. In this mode, the last pixel of a line is combined with the first pixel of the next line as a two-pixel-pair, and is sent to LCM.

For example, if the ROI's width x height is 3 x 3. The output sequence is

R_0G_0 --- pixel 0 of line 0
B_0R_1
G_1B_1
R_2G_2
B_2R_0 --- pixel 0 of line 1
G_0B_0
R_1G_1
B_1R_2
G_2B_2
R_0G_0 --- pixel 0 of line 2
B_0R_1
G_1B_1
R_2G_2

MediaTek Confidential Release for Cenon WCX

This document contains information that is proprietary to MediaTek Inc.

Unauthorized reproduction or disclosure of this information in whole or in part is strictly prohibited.

B_2R_1 --- LCD driver should not care this R_1.

FCNT Enable frame update counter. Counter starts when LCD leaves the IDLE state and stops when it returns to IDLE.

ENn Layer Window Enable Control.

Note : If there are two pixels in one row, Blue color indicates the prior pixel in scan direction, and black color means the later pixel. The scan direction is from left-top to right-bottom, horizontal scan first. The skin color means the dummy bit of 9 bit interface.

format	I/F width	padding	significance	sequence	throughput (pixel/cycle)	output sequence
RGB332	8	x	x	0	1pixel/1cycle	$R_2R_1R_0G_2G_1G_0B_1B_0$
		x	x	1	1pixel/1cycle	$B_1B_0G_2G_1G_0R_2R_1R_0$
RGB332	9	x	x	0	1pixel/1cycle	$B_0R_2R_1R_0G_2G_1G_0B_1B_0$
		x	x	1	1pixel/1cycle	$R_0B_1B_0G_2G_1G_0R_2R_1R_0$
	16	x	0	0	2pixel/1cycle	$R_2R_1R_0G_2G_1G_0B_1B_0R_2R_1R_0G_2G_1G_0B_1B_0$
		x	0	1	2pixel/1cycle	$B_1B_0G_2G_1G_0R_2R_1R_0B_1B_0G_2G_1G_0R_2R_1R_0$
		x	1	0	2pixel/1cycle	$R_2R_1R_0G_2G_1G_0B_1B_0R_2R_1R_0G_2G_1G_0B_1B_0$
		x	1	1	2pixel/1cycle	$B_1B_0G_2G_1G_0R_2R_1R_0B_1B_0G_2G_1G_0R_2R_1R_0$
	18	x	0	0	2pixel/1cycle	$xxR_2R_1R_0G_2G_1G_0B_1B_0R_2R_1R_0G_2G_1G_0B_1B_0$
		x	0	1	2pixel/1cycle	$xxB_1B_0G_2G_1G_0R_2R_1R_0B_1B_0G_2G_1G_0R_2R_1R_0$
		x	1	0	2pixel/1cycle	$xxR_2R_1R_0G_2G_1G_0B_1B_0R_2R_1R_0G_2G_1G_0B_1B_0$
		x	1	1	2pixel/1cycle	$xxB_1B_0G_2G_1G_0R_2R_1R_0B_1B_0G_2G_1G_0R_2R_1R_0$
RGB444	8	x	0	0	2pixel/3cycle	$R_3R_2R_1R_0G_3G_2G_1G_0$ $B_3B_2B_1B_0R_3R_2R_1R_0$ $G_3G_2G_1G_0B_3B_2B_1B_0$

MediaTek Confidential Release for Cenon WCX
MediaTek Confidential Release for Cenon WCX

This document contains information that is proprietary to MediaTek Inc.

Unauthorized reproduction or disclosure of this information in whole or in part is strictly prohibited.

format	I/F width	padding	significance	sequence	throughput (pixel/cycle)	output sequence
		x	0	1	2pixel/3cycle	$B_3B_2B_1B_0G_3G_2G_1G_0$ $R_3R_2R_1R_0B_3B_2B_1B_0$ $G_3G_2G_1G_0R_3R_2R_1R_0$
		x	1	0	2pixel/3cycle	$G_3G_2G_1G_0B_3B_2B_1B_0$ $B_3B_2B_1B_0R_3R_2R_1R_0$ $R_3R_2R_1R_0G_3G_2G_1G_0$
		x	1	1	2pixel/3cycle	$G_3G_2G_1G_0R_3R_2R_1R_0$ $R_3R_2R_1R_0B_3B_2B_1B_0$ $B_3B_2B_1B_0G_3G_2G_1G_0$
	9	x	0	0	2pixel/3cycle	$G_0R_3R_2R_1R_0G_3G_2G_1G_0$ $R_0B_3B_2B_1B_0R_3R_2R_1R_0$ $B_0G_3G_2G_1G_0B_3B_2B_1B_0$
		x	0	1	2pixel/3cycle	$G_0B_3B_2B_1B_0G_3G_2G_1G_0$ $B_0R_3R_2R_1R_0B_3B_2B_1B_0$ $R_0G_3G_2G_1G_0R_3R_2R_1R_0$
		x	1	0	2pixel/3cycle	$B_0G_3G_2G_1G_0B_3B_2B_1B_0$ $R_0B_3B_2B_1B_0R_3R_2R_1R_0$ $G_0R_3R_2R_1R_0G_3G_2G_1G_0$
RGB444	9	x	1	1	2pixel/3cycle	$R_0G_3G_2G_1G_0R_3R_2R_1R_0$ $B_0R_3R_2R_1R_0B_3B_2B_1B_0$ $G_0B_3B_2B_1B_0G_3G_2G_1G_0$
	16	0	x	0	1pixel/1cycle	$R_3R_2R_1R_0G_3G_2G_1G_0B_3B_2B_1B_0$xxxx
		0	x	1	1pixel/1cycle	$B_3B_2B_1B_0G_3G_2G_1G_0R_3R_2R_1R_0$xxxx
		1	x	0	1pixel/1cycle	xxxx$R_3R_2R_1R_0G_3G_2G_1G_0B_3B_2B_1B_0$

MediaTek Confidential Release for Cenon WCX
MediaTek Confidential Release for Cenon WCX

This document contains information that is proprietary to MediaTek Inc.

Unauthorized reproduction or disclosure of this information in whole or in part is strictly prohibited.

format	I/F width	padding	significance	sequence	throughput (pixel/cycle)	output sequence
		1	x	1	1pixel/1cycle	xxxx$B_3B_2B_1B_0G_3G_2G_1G_0R_3R_2R_1R_0$
	18	0	x	0	1pixel/1cycle	xx$R_3R_2R_1R_0G_3G_2G_1G_0B_3B_2B_1B_0$xxxx
		0	x	1	1pixel/1cycle	xx$B_3B_2B_1B_0G_3G_2G_1G_0R_3R_2R_1R_0$xxxx
		1	x	0	1pixel/1cycle	xxxxxx$R_3R_2R_1R_0G_3G_2G_1G_0B_3B_2B_1B_0$
		1	x	1	1pixel/1cycle	xxxxxx$B_3B_2B_1B_0G_3G_2G_1G_0R_3R_2R_1R_0$
RGB565	8	x	0	0	1pixel/2cycle	$R_4R_3R_2R_1R_0G_5G_4G_3$ $G_2G_1G_0B_4B_3B_2B_1B_0$
		x	0	1	1pixel/2cycle	$B_4B_3B_2B_1B_0G_5G_4G_3$ $G_2G_1G_0R_4R_3R_2R_1R_0$
		x	1	0	1pixel/2cycle	$G_2G_1G_0B_4B_3B_2B_1B_0$ $R_4R_3R_2R_1R_0G_5G_4G_3$
		x	1	1	1pixel/2cycle	$G_2G_1G_0R_4R_3R_2R_1R_0$ $B_4B_3B_2B_1B_0G_5G_4G_3$
	9	x	0	0	1pixel/2cycle	$G_3R_4R_3R_2R_1R_0G_5G_4G_3$ $B_0G_2G_1G_0B_4B_3B_2B_1B_0$
		x	0	1	1pixel/2cycle	$G_3B_4B_3B_2B_1B_0G_5G_4G_3$ $R_0G_2G_1G_0R_4R_3R_2R_1R_0$
		x	1	0	1pixel/2cycle	$B_0G_2G_1G_0B_4B_3B_2B_1B_0$ $G_3R_4R_3R_2R_1R_0G_5G_4G_3$
		x	1	1	1pixel/2cycle	$R_0G_2G_1G_0R_4R_3R_2R_1R_0$ $G_3B_4B_3B_2B_1B_0G_5G_4G_3$
	16	x	x	0	1pixel/1cycle	$R_4R_3R_2R_1R_0G_5G_4G_3G_2G_1G_0B_4B_3B_2B_1B_0$
		x	x	1	1pixel/1cycle	$B_4B_3B_2B_1B_0G_5G_4G_3G_2G_1G_0R_4R_3R_2R_1R_0$
	18	x	x	0	1pixel/1cycle	xx$R_4R_3R_2R_1R_0G_5G_4G_3G_2G_1G_0B_4B_3B_2B_1B_0$

MediaTek Confidential Release for Cenon WCX

This document contains information that is proprietary to MediaTek Inc.

Unauthorized reproduction or disclosure of this information in whole or in part is strictly prohibited.

format	I/F width	padding	significance	sequence	throughput (pixel/cycle)	output sequence
		x	x	1	1pixel/1cycle	$xxB_4B_3B_2B_1B_0G_5G_4G_3G_2G_1G_0R_4R_3R_2R_1R_0$
RGB666	8	0	0	0	1pixel/3cycle	$R_5R_4R_3R_2R_1R_0xx$ $G_5G_4G_3G_2G_1G_0xx$ $B_5B_4B_3B_2B_1B_0xx$
		0	0	1	1pixel/3cycle	$B_5B_4B_3B_2B_1B_0xx$ $G_5G_4G_3G_2G_1G_0xx$ $R_5R_4R_3R_2R_1R_0xx$
		0	1	0	1pixel/3cycle	$B_5B_4B_3B_2B_1B_0xx$ $G_5G_4G_3G_2G_1G_0xx$ $R_5R_4R_3R_2R_1R_0xx$
		0	1	1	1pixel/3cycle	$R_5R_4R_3R_2R_1R_0xx$ $G_5G_4G_3G_2G_1G_0xx$ $B_5B_4B_3B_2B_1B_0xx$
		1	0	0	1pixel/3cycle	$xxR_5R_4R_3R_2R_1R_0$ $xxG_5G_4G_3G_2G_1G_0$ $xxB_5B_4B_3B_2B_1B_0$
		1	0	1	1pixel/3cycle	$xxB_5B_4B_3B_2B_1B_0$ $xxG_5G_4G_3G_2G_1G_0$ $xxR_5R_4R_3R_2R_1R_0$
		1	1	0	1pixel/3cycle	$xxB_5B_4B_3B_2B_1B_0$ $xxG_5G_4G_3G_2G_1G_0$ $xxR_5R_4R_3R_2R_1R_0$

MediaTek Confidential Release for Cenon WCX
MediaTek Confidential Release for Cenon WCX

This document contains information that is proprietary to MediaTek Inc.

Unauthorized reproduction or disclosure of this information in whole or in part is strictly prohibited.

format	I/F width	padding	significance	sequence	throughput (pixel/cycle)	output sequence
	9	1	1	1	1pixel/3cycle	$xxR_5R_4R_3R_2R_1R_0$ $xxG_5G_4G_3G_2G_1G_0$ $xxB_5B_4B_3B_2B_1B_0$
		x	0	0	1pixel/2cycle	$R_5R_4R_3R_2R_1R_0G_5G_4G_3$ $G_2G_1G_0B_5B_4B_3B_2B_1B_0$
		x	0	1	1pixel/2cycle	$B_5B_4B_3B_2B_1B_0G_5G_4G_3$ $G_2G_1G_0R_5R_4R_3R_2R_1R_0$
		x	1	0	1pixel/2cycle	$G_2G_1G_0B_5B_4B_3B_2B_1B_0$ $R_5R_4R_3R_2R_1R_0G_5G_4G_3$
		x	1	1	1pixel/2cycle	$G_2G_1G_0R_5R_4R_3R_2R_1R_0$ $B_5B_4B_3B_2B_1B_0G_5G_4G_3$
RGB666	16	0	0	0	2pixel/3cycle	$R_5R_4R_3R_2R_1R_0G_5G_4G_3G_2G_1G_0xxxx$ $B_5B_4B_3B_2B_1B_0R_5R_4R_3R_2R_1R_0xxxx$ $G_5G_4G_3G_2G_1G_0B_5B_4B_3B_2B_1B_0xxxx$
		0	0	1	2pixel/3cycle	$B_5B_4B_3B_2B_1B_0G_5G_4G_3G_2G_1G_0xxxx$ $R_5R_4R_3R_2R_1R_0B_5B_4B_3B_2B_1B_0xxxx$ $G_5G_4G_3G_2G_1G_0R_5R_4R_3R_2R_1R_0xxxx$
		0	1	0	2pixel/3cycle	$G_5G_4G_3G_2G_1G_0B_5B_4B_3B_2B_1B_0xxxx$ $B_5B_4B_3B_2B_1B_0R_5R_4R_3R_2R_1R_0xxxx$ $R_5R_4R_3R_2R_1R_0G_5G_4G_3G_2G_1G_0xxxx$
		0	1	1	2pixel/3cycle	$G_5G_4G_3G_2G_1G_0R_5R_4R_3R_2R_1R_0xxxx$ $R_5R_4R_3R_2R_1R_0B_5B_4B_3B_2B_1B_0xxxx$ $B_5B_4B_3B_2B_1B_0G_5G_4G_3G_2G_1G_0xxxx$

MediaTek Confidential Release for Cenon WCX

This document contains information that is proprietary to MediaTek Inc.

Unauthorized reproduction or disclosure of this information in whole or in part is strictly prohibited.

format	I/F width	padding	significance	sequence	throughput (pixel/cycle)	output sequence
		1	0	0	2pixel/3cycle	xxxx$R_5R_4R_3R_2R_1R_0G_5G_4G_3G_2G_1G_0$ xxxx$B_5B_4B_3B_2B_1B_0R_5R_4R_3R_2R_1R_0$ xxxx$G_5G_4G_3G_2G_1G_0B_5B_4B_3B_2B_1B_0$
		1	0	1	2pixel/3cycle	xxxx$B_5B_4B_3B_2B_1B_0G_5G_4G_3G_2G_1G_0$ xxxx$R_5R_4R_3R_2R_1R_0B_5B_4B_3B_2B_1B_0$ xxxx$G_5G_4G_3G_2G_1G_0R_5R_4R_3R_2R_1R_0$
		1	1	0	2pixel/3cycle	xxxx$G_5G_4G_3G_2G_1G_0B_5B_4B_3B_2B_1B_0$ xxxx$B_5B_4B_3B_2B_1B_0R_5R_4R_3R_2R_1R_0$ xxxx$R_5R_4R_3R_2R_1R_0G_5G_4G_3G_2G_1G_0$
		1	1	1	2pixel/3cycle	xxxx$G_5G_4G_3G_2G_1G_0R_5R_4R_3R_2R_1R_0$ xxxx$R_5R_4R_3R_2R_1R_0B_5B_4B_3B_2B_1B_0$ xxxx$B_5B_4B_3B_2B_1B_0G_5G_4G_3G_2G_1G_0$
	18	x	x	0	1pixel/1cycle	$R_5R_4R_3R_2R_1R_0G_5G_4G_3G_2G_1G_0B_5B_4B_3B_2B_1B_0$
		x	x	1	1pixel/1cycle	$B_5B_4B_3B_2B_1B_0G_5G_4G_3G_2G_1G_0R_5R_4R_3R_2R_1R_0$
RGB888	8	x	0	0	1pixel/3cycle	$R_7R_6R_5R_4R_3R_2R_1R_0$ $G_7G_6G_5G_4G_3G_2G_1G_0$ $B_7B_6B_5B_4B_3B_2B_1B_0$
RGB888	8	x	0	1	1pixel/3cycle	$B_7B_6B_5B_4B_3B_2B_1B_0$ $G_7G_6G_5G_4G_3G_2G_1G_0$ $R_7R_6R_5R_4R_3R_2R_1R_0$
		x	1	0	1pixel/3cycle	$B_7B_6B_5B_4B_3B_2B_1B_0$ $G_7G_6G_5G_4G_3G_2G_1G_0$ $R_7R_6R_5R_4R_3R_2R_1R_0$

MediaTek Confidential Release for Cenon WCX

This document contains information that is proprietary to MediaTek Inc.

Unauthorized reproduction or disclosure of this information in whole or in part is strictly prohibited.

format	I/F width	padding	significance	sequence	throughput (pixel/cycle)	output sequence
	9	x	1	1	1pixel/3cycle	$R_7R_6R_5R_4R_3R_2R_1R_0$ $G_7G_6G_5G_4G_3G_2G_1G_0$ $B_7B_6B_5B_4B_3B_2B_1B_0$
		x	0	0	1pixel/3cycle	$R_0R_7R_6R_5R_4R_3R_2R_1R_0$ $G_0G_7G_6G_5G_4G_3G_2G_1G_0$ $B_0B_7B_6B_5B_4B_3B_2B_1B_0$
		x	0	1	1pixel/3cycle	$B_0B_7B_6B_5B_4B_3B_2B_1B_0$ $G_0G_7G_6G_5G_4G_3G_2G_1G_0$ $R_0R_7R_6R_5R_4R_3R_2R_1R_0$
		x	1	0	1pixel/3cycle	$B_0B_7B_6B_5B_4B_3B_2B_1B_0$ $G_0G_7G_6G_5G_4G_3G_2G_1G_0$ $R_0R_7R_6R_5R_4R_3R_2R_1R_0$
		x	1	1	1pixel/3cycle	$R_0R_7R_6R_5R_4R_3R_2R_1R_0$ $G_0G_7G_6G_5G_4G_3G_2G_1G_0$ $B_0B_7B_6B_5B_4B_3B_2B_1B_0$
	16	x	0	0	2pixel/3cycle	$R_7R_6R_5R_4R_3R_2R_1R_0G_7G_6G_5G_4G_3G_2G_1G_0$ $B_7B_6B_5B_4B_3B_2B_1B_0R_7R_6R_5R_4R_3R_2R_1R_0$ $G_7G_6G_5G_4G_3G_2G_1G_0B_7B_6B_5B_4B_3B_2B_1B_0$
		x	0	1	2pixel/3cycle	$B_7B_6B_5B_4B_3B_2B_1B_0G_7G_6G_5G_4G_3G_2G_1G_0$ $R_7R_6R_5R_4R_3R_2R_1R_0B_7B_6B_5B_4B_3B_2B_1B_0$ $G_7G_6G_5G_4G_3G_2G_1G_0R_7R_6R_5R_4R_3R_2R_1R_0$
		x	1	0	2pixel/3cycle	$G_7G_6G_5G_4G_3G_2G_1G_0B_7B_6B_5B_4B_3B_2B_1B_0$ $B_7B_6B_5B_4B_3B_2B_1B_0R_7R_6R_5R_4R_3R_2R_1R_0$ $R_7R_6R_5R_4R_3R_2R_1R_0G_7G_6G_5G_4G_3G_2G_1G_0$

MediaTek Confidential Release for Cenon WCX

This document contains information that is proprietary to MediaTek Inc.

Unauthorized reproduction or disclosure of this information in whole or in part is strictly prohibited.

format	I/F width	padding	significance	sequence	throughput (pixel/cycle)	output sequence
RGB888	16	x	1	1	2pixel/3cycle	$G_7G_6G_5G_4G_3G_2G_1G_0R_7R_6R_5R_4R_3R_2R_1R_0$ $R_7R_6R_5R_4R_3R_2R_1R_0B_7B_6B_5B_4B_3B_2B_1B_0$ $B_7B_6B_5B_4B_3B_2B_1B_0G_7G_5G_5G_4G_3G_2G_1G_0$
	18	x	0	0	2pixel/3cycle	$xxR_7R_6R_5R_4R_3R_2R_1R_0G_7G_6G_5G_4G_3G_2G_1G_0$ $xxB_7B_6B_5B_4B_3B_2B_1B_0R_7R_6R_5R_4R_3R_2R_1R_0$ $xxG_7G_6G_5G_4G_3G_2G_1G_0B_7B_6B_5B_4B_3B_2B_1B_0$
		x	0	1	2pixel/3cycle	$xxB_7B_6B_5B_4B_3B_2B_1B_0G_7G_6G_5G_4G_3G_2G_1G_0$ $xxR_7R_6R_5R_4R_3R_2R_1R_0B_7B_6B_5B_4B_3B_2B_1B_0$ $xxG_7G_6G_5G_4G_3G_2G_1G_0R_7R_6R_5R_4R_3R_2R_1R_0$
		x	1	0	2pixel/3cycle	$xxG_7G_6G_5G_4G_3G_2G_1G_0B_7B_6B_5B_4B_3B_2B_1B_0$ $xxB_7B_6B_5B_4B_3B_2B_1B_0R_7R_6R_5R_4R_3R_2R_1R_0$ $xxR_7R_6R_5R_4R_3R_2R_1R_0G_7G_6G_5G_4G_3G_2G_1G_0$
		x	1	1	2pixel/3cycle	$xxG_7G_6G_5G_4G_3G_2G_1G_0R_7R_6R_5R_4R_3R_2R_1R_0$ $xxR_7R_6R_5R_4R_3R_2R_1R_0B_7B_6B_5B_4B_3B_2B_1B_0$ $xxB_7B_6B_5B_4B_3B_2B_1B_0G_7G_5G_5G_4G_3G_2G_1G_0$

Table 60 WROICON.FORMAT List

9000_0084h Region of Interest Window Offset Register LCD_WROIOFS

Bit	31	30	29	28	27	26	25	24	23	22	21	20	19	18	17	16
Name						Y-OFFSET										
Type						R/W										
Bit	15	14	13	12	11	10	9	8	7	6	5	4	3	2	1	0
Name						X-OFFSET										
Type						R/W										

X-OFFSET ROI Window Column Offset, please see Figure 51.
Y-OFFSET ROI Window Row Offset, please see Figure 51.

MediaTek Confidential Release for Cenon WCX

This document contains information that is proprietary to MediaTek Inc.

Unauthorized reproduction or disclosure of this information in whole or in part is strictly prohibited.

MediaTek Confidential Release for Cenon WCX

9000_0088h Region of Interest Window Command Address Register LCD_WROICADD

Bit	15	14	13	12	11	10	9	8	7	6	5	4	3	2	1	0
Name	ADDR															
Type	R/W															

ADDR ROI Window Command Address. Specify the address that the commands will be sent to. Only eight possible values are allowed.

- **4000h** Commands are sent to LCD parallel interface 0 and LPA0 will be set to 0.
- **5000h** Commands are sent to LCD parallel interface 1 and LPA0 will be set to 0.
- **6000h** Commands are sent to LCD on EMI interface and LPA0 will be set to 0.
- **8000h** Commands are sent to LCD serial interface and LPA0 will be set to 0.
- **4100h** Commands are sent to LCD parallel interface 0 and LPA0 will be set to 1.
- **5100h** Commands are sent to LCD parallel interface 1 and LPA0 will be set to 1.
- **6100h** Commands are sent to LCD on EMI interface and LPA0 will be set to 1.
- **8100h** Commands are sent to LCD serial interface and LPA0 will be set to 1.

Note: In order to access port 6000 directly, software should access the EMI memory location instead. For example, if the LCM is connected to CS2 on the EMI, then address bit [28:27] = 10. Address bit[1] represents the LCM A0 bit. So if we want to write to the LCM with A0=1, then we write to address 0x1000_0002.

9000_008Ch Region of Interest Window Data Address Register LCD_WROIDADD

Bit	15	14	13	12	11	10	9	8	7	6	5	4	3	2	1	0
Name	ADDR															
Type	R/W															

ADDR ROI Window Data Address. Specify the address that the data will be sent to. Only eight possible values are allowed.

- **4000h** Data are sent to LCD parallel interface 0 and LPA0 will be set to 0.
- **5000h** Data are sent to LCD parallel interface 1 and LPA0 will be set to 0.
- **6000h** Data are sent to LCD on EMI interface and LPA0 will be set to 0.

This document contains information that is proprietary to MediaTek Inc.

Unauthorized reproduction or disclosure of this information in whole or in part is strictly prohibited.

8000h Data are sent to LCD serial interface and LPA0 will be set to 0.
4100h Data are sent to LCD parallel interface 0 and LPA0 will be set to 1.
5100h Data are sent to LCD parallel interface 1 and LPA0 will be set to 1.
6100h Data are sent to LCD on EMI interface and LPA0 will be set to 1.
8100h Data are sent to LCD serial interface and LPA0 will be set to 1.

9000_0090h Region of Interest Window Size Register LCD_WROISIZE

Bit	31	30	29	28	27	26	25	24	23	22	21	20	19	18	17	16
Name						ROW										
Type						R/W										
Bit	15	14	13	12	11	10	9	8	7	6	5	4	3	2	1	0
Name						COLUMN										
Type						R/W										

COLUMN ROI Window Column Size in unit of pixel, please see Figure 51.
ROW ROI Window Row Size in unit of pixel, please see Figure 51.

MediaTek Confidential Release for Cenon WCX

This document contains information that is proprietary to MediaTek Inc.

Unauthorized reproduction or disclosure of this information in whole or in part is strictly prohibited.

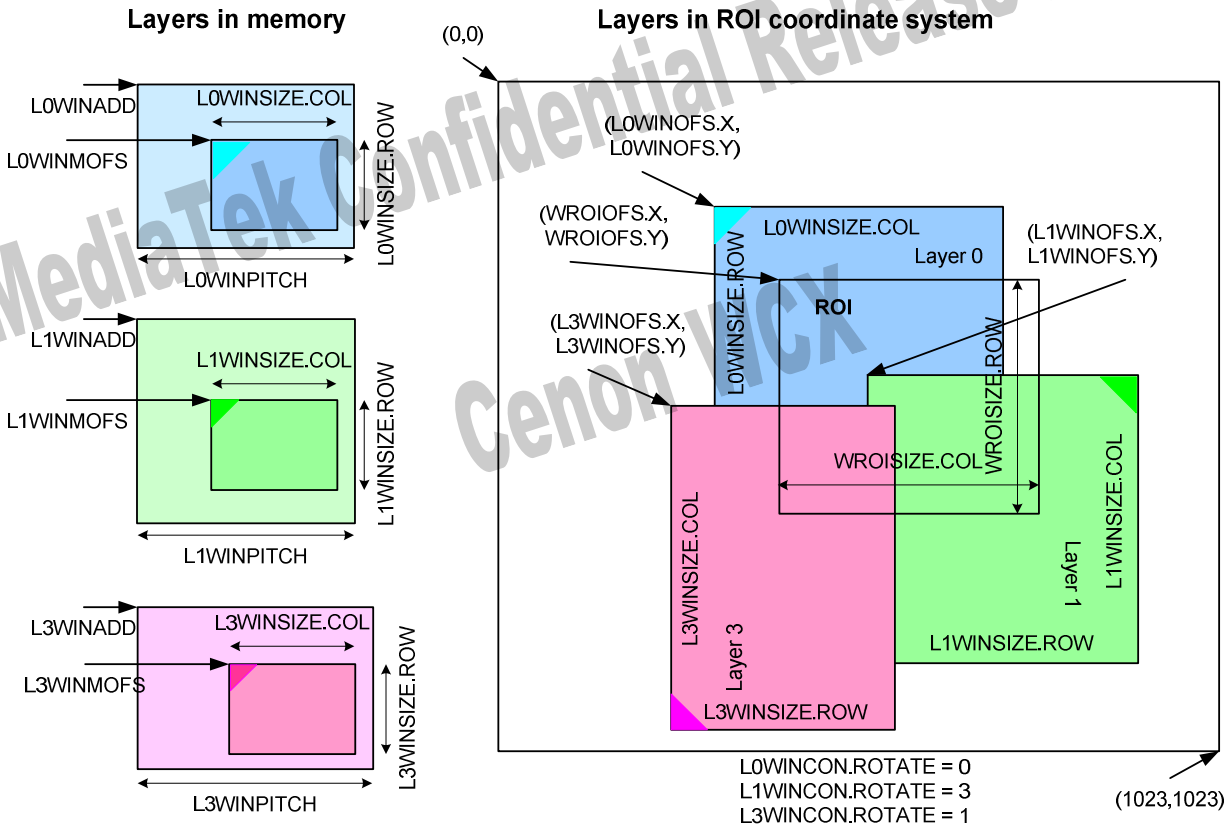

Figure 51 **Layers and ROI setting**

MediaTek Confidential Release for Cenon WCX

This document contains information that is proprietary to MediaTek Inc.

Unauthorized reproduction or disclosure of this information in whole or in part is strictly prohibited.

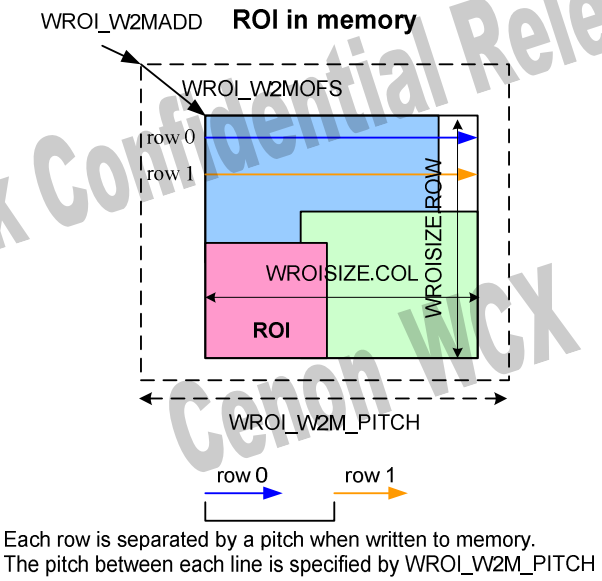

Figure 52 **ROI write to memory setting**

9000_009C Region of Interest Background Color Register

LCD_WROI_BGCLR

Bit	31	30	29	28	27	26	25	24	23	22	21	20	19	18	17	16
Name	ALPHA[7:0]								RED[7:0]							
Type	R/W	R/W	R/W	R/W	R/W	R/W	R/W	R/W	R/W	R/W	R/W	R/W	R/W	R/W	R/W	R/W
Reset	1	1	1	1	1	1	1	1	1	1	1	1	1	1	1	1
Bit	15	14	13	12	11	10	9	8	7	6	5	4	3	2	1	0
Name	GREEN[7:0]								BLUE[7:0]							
Type	R/W	R/W	R/W	R/W	R/W	R/W	R/W	R/W	R/W	R/W	R/W	R/W	R/W	R/W	R/W	R/W
Reset	1	1	1	1	1	1	1	1	1	1	1	1	1	1	1	1

BLUE Blue component of ROI window's background color
GREEN Green component of ROI window's background color
RED Red component of ROI window's background color
ALPHA Alpha component of ROI window's background color

MediaTek Confidential Release for Cenon WCX

This document contains information that is proprietary to MediaTek Inc.

Unauthorized reproduction or disclosure of this information in whole or in part is strictly prohibited.

9000_00A0h Region of Interest Window Write to LCM Continuous Count LCD_WROI_CONTI

Bit	15	14	13	12	11	10	9	8	7	6	5	4	3	2	1	0
Name									WROI_CONTI							
Type	R/W	R/W	R/W	R/W	R/W	R/W	R/W	R/W	R/W	R/W	R/W	R/W	R/W	R/W	R/W	R/W
Reset	0	0	0	0	0	0	0	0	0	0	0	0	0	0	0	0

WROI_CONTI Continuous write to LCM count without chip select de-asserted.

- **0** Continuously write 1 pixel to LCM without chip select de-asserted.
- **1** Continuously write 2 pixels to LCM without chip select de-asserted.
- **N** Continuously write N+1 pixels to LCM without chip select de-asserted.

NOTE: IF LCD_WROICON.PERIOD != 0, this register won't take effect.

9000_00B0h Layer 0 Window Control Register LCD_L0WINCON

Bit	31	30	29	28	27	26	25	24	23	22	21	20	19	18	17	16
Name						RGB_SWP		DST_KEYEN		CLRFMT				DITHER_EN	SCRL_EN	BYTE_SWP
Type								R/W		R/W	R/W	R/W		R/W	R/W	R/W
Bit	15	14	13	12	11	10	9	8	7	6	5	4	3	2	1	0
Name	SRC	SRC_KEYEN	ROTATE					ALPHA_EN	ALPHA							
Type	R/W	R/W	R/W					R/W	R/W							

ALPHA Constant alpha value.

ALPHA_EN Enable Alpha blending

- **0** Disable Alpha blending
- **1** Enable Alpha blending, and the blending equations are specified by CLRFMT

ROTATE Rotation Configuration

- **000** no rotation
- **001** 90 degree rotation (counterclockwise, single request only)
- **010** 180 degree rotation (counterclockwise)
- **011** 270 degree rotation (counterclockwise, single request only)
- **100** Horizontal flip
- **101** Horizontal flip then 90 degree rotation (counterclockwise, single request only)

MediaTek Confidential Release for Cenon WCX

This document contains information that is proprietary to MediaTek Inc.

Unauthorized reproduction or disclosure of this information in whole or in part is strictly prohibited.

110 Horizontal flip then 180 degree rotation (counterclockwise)
111 Horizontal flip then 270 degree rotation (counterclockwise, single request only)

SRC_KEYEN Enable source color key. If the color format is YUYV422, this function is not supported.

SRC Disable auto-increment of the source pixel address. It makes the value of each pixel is the same as the first pixel of this frame. Just for debug.

BYTE_SWP Swap high byte and low byte of pixel data read from memory

SCRL_EN Enable scroll effect.

DITHER_EN Enable dithering. Please see LCD_DITERCON.

CLRFMT Color format

000 8bpp indexed color
001 RGB 565
010 YUYV422
011 RGB 888
100 ARGB 8888
101 PARGB8888
110 XRGB8888
Others Reserved

DST_KEYEN Enable destination color key. If the color format is YUYV422, this function is not supported.

RGB_SWP Swap RGB order of input pixel.

Note: SRC_KEYEN and DST_KEYEN are exclusive setting. They can't be enabled at the same time.

MediaTek Confidential Release for Cenon WCX

This document contains information that is proprietary to MediaTek Inc.

Unauthorized reproduction or disclosure of this information in whole or in part is strictly prohibited.

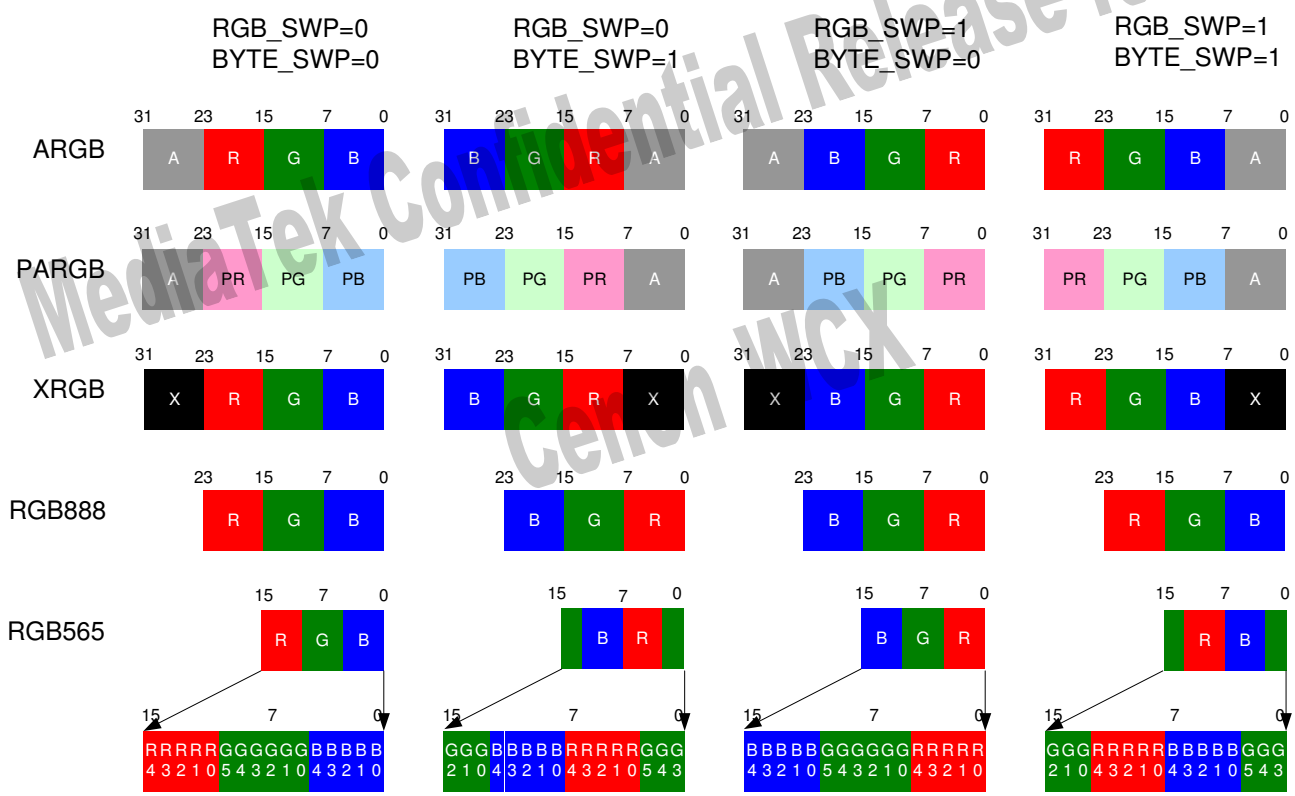

Figure 53 **Layer source RGB format**

The byte order in memory of YUYV422 is described in Figure 54 **YUYV422 byte order in memory**. Y_0 is the Y component of the first pixel, P_0. Y_1 is the Y component of the second pixel, P_1.

MediaTek Confidential Release for Cenon WCX

This document contains information that is proprietary to MediaTek Inc.

Unauthorized reproduction or disclosure of this information in whole or in part is strictly prohibited.

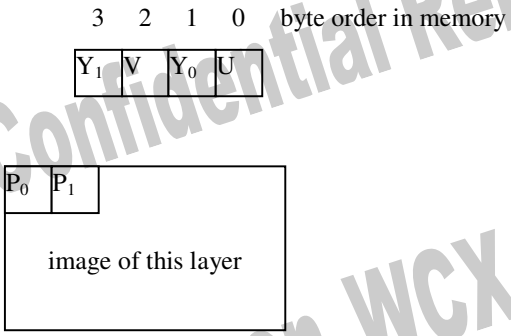

Figure 54 **YUYV422 byte order in memory**

Note: When use YUYV422 mode, the pitch of this layer (LCD_LxWINPITCH) must be even, and the base address (LCD_LxWINADD) of this layer also must be 4-byte aligned. Source color key and destination color key are NOT supported in YUYV422 mode.

Note: If color depth is YUYV422, the YUYV422 source will be translated to RGB domain and then overlaid. The YUV to RGB transformation is following the equations.

$$\begin{pmatrix} R \\ G \\ B \end{pmatrix} = \frac{1}{32} \times \begin{bmatrix} 32 & 0 & 45 \\ 32 & -11 & -23 \\ 32 & 57 & 0 \end{bmatrix} \bullet \begin{pmatrix} Y \\ U-128 \\ V-128 \end{pmatrix}$$

The alpha blending formula is selected by source color format automatically.

If source color format is **RGB565, RGB888 or YUYV422** then the alpha blending formula is

$$dst.r = dst.r * (0xff - SCA) / 0xff + src.r * SCA / 0xff;$$
$$dst.g = dst.g * (0xff - SCA) / 0xff + src.g * SCA / 0xff;$$
$$dst.b = dst.b * (0xff - SCA) / 0xff + src.b * SCA / 0xff;$$
$$dst.a = dst.a * (0xff - SCA) / 0xff + SCA;$$

If source color format is **PARGB** then the alpha blending formula is

MediaTek Confidential Release for Cenon WCX

This document contains information that is proprietary to MediaTek Inc.

Unauthorized reproduction or disclosure of this information in whole or in part is strictly prohibited.

```
if ( SCA != 0xff) {
    dst.r = dst.r * (0xff - src.a * SCA / 0xff) / 0xff + src.r * SCA / 0xff;
    dst.g = dst.g * (0xff - src.a * SCA / 0xff) / 0xff + src.g * SCA / 0xff;
    dst.b = dst.b * (0xff - src.a * SCA / 0xff) / 0xff + src.b * SCA / 0xff;
    dst.a = dst.a * (0xff - src.a * SCA / 0xff) / 0xff + src.a * SCA / 0xff;
} else { // SCA == 0xff
    dst.r = dst.r * (0xff - src.a ) / 0xff + src.r;
    dst.g = dst.g * (0xff - src.a ) / 0xff + src.g;
    dst.b = dst.b * (0xff - src.a ) / 0xff + src.b;
    dst.a = dst.a * (0xff - src.a ) / 0xff + src.a
}
```

If source color format is **ARGB** then the alpha blending formula is

```
if ( SCA != 0xff ) {
    dst.r = dst.r * (0xff - src.a * SCA / 0xff) / 0xff + src.r * src.a / 0xff * SCA / 0xff;
    dst.g = dst.g * (0xff - src.a * SCA / 0xff) / 0xff + src.g * src.a / 0xff * SCA / 0xff;
    dst.b = dst.b * (0xff - src.a * SCA / 0xff) / 0xff + src.b * src.a / 0xff * SCA / 0xff;
    dst.a = dst.a * (0xff - src.a * SCA / 0xff) / 0xff + src.a * SCA / 0xff;
} else { // SCA == 0xff
    if SCA = 0xff
    dst.r = dst.r * (0xff - src.a ) / 0xff + src.r * src.a / 0xff;
    dst.g = dst.g * (0xff - src.a ) / 0xff + src.g * src.a / 0xff;
    dst.r = dst.b * (0xff - src.a ) / 0xff + src.b * src.a / 0xff;
    dst.a = dst.a * (0xff - src.a ) / 0xff + src.a;
}
```

src.r, src.g, src.b, and src.a are this layer's pixel value.
dst.r, dst.r, dst.b, and dst.a are the result of alpha blending of all lower layers.
Note: SCA is the source constant alpha specified by LCD_L0WINCON.ALPHA.

Alpha blending hardware approximation:

MediaTek Confidential Release for Cenon WCX

This document contains information that is proprietary to MediaTek Inc.

Unauthorized reproduction or disclosure of this information in whole or in part is strictly prohibited.

If source color format is **RGB565, RGB888 or YUYV422** then the hardware implements the following equation to approximate the above equation of 8-bit index color, RGB565, RGB888 or YUYV422. Only list red channel, other channels are the same.

$$tmp.r = SCA \times (src.r - dst.r) + 255 * dst.r + 128;$$
$$dst'.r = (tmp.r + tmp.r >> 8) >> 8;$$
$$tmp_d.a = dst.a \times (255 - SCA) + 128$$
$$tmp.a = (tmp_d.a + tmp_d.a >> 8) >> 8$$
$$dst'.a = src.a + tmp.a$$

If source color format is **PARGB** then the hardware implements the following equation to approximate the above equation of PARGB. Only list red channel, others are the same.

$$\text{if } (SCA != 0xff) \{$$
$$tmp_s.a = src.a \times SCA + 128$$
$$src'.a = (tmp_s.a + tmp_s.a >> 8) >> 8$$
$$tmp_s.r = src.r \times SCA + 128$$
$$src'.r = (tmp_s.r + tmp_s.r >> 8) >> 8$$
$$tmp_d.r = dst.r \times (255 - src'.a) + 128$$
$$tmp.r = (tmp_d.r + tmp_d.r >> 8) >> 8$$
$$dst'.r = src'.r + tmp.r$$
$$\} \text{ else } \{ \text{ // } SCA == 0xff$$
$$tmp_d.r = dst.r \times (255 - src.a) + 128$$
$$tmp.r = (tmp_d.r + tmp_d.r >> 8) >> 8$$
$$dst'.r = src.r + tmp.r$$
$$\}$$

If source color format is **ARGB** then the hardware implements the following equation to approximate the above equation of ARGB. Only list red and alpha channels, others are the same.

MediaTek Confidential Release for Cenon WCX
MediaTek Confidential Release for Cenon WCX

This document contains information that is proprietary to MediaTek Inc.

Unauthorized reproduction or disclosure of this information in whole or in part is strictly prohibited.

```
if ( SCA != 0xff ) {
    tmp_s.a = src.a × SCA + 128;
    src'.a = (tmp_s.a + tmp_s.a >> 8) >> 8;
    tmp_d.a = dst.a × (255 - src'.a) + 128;
    tmp.a = (tmp_d.a + tmp_d.a >> 8) >> 8;
    dst'.a = src'.a + tmp.a;

    tmp.r = src'.a × (src.r - dst.r) + 255 * dst.r + 128;
    dst'.r = (tmp.r + tmp.r >> 8) >> 8;
} else { // SCA == 0xff
    tmp_d.a = dst.a × (255 - src.a) + 128;
    tmp.a = (tmp_d.a + tmp_d.a >> 8) >> 8;
    dst'.a = src.a + tmp.a;

    tmp.r = src.a × (src.r - dst.r) + 255 * dst.r + 128;
    dst'.r = (tmp.r + tmp.r >> 8) >> 8;
}
```

Effect Ordering: Each layer has many effects which can be turned on concurrently. The order the effects are applied are as follows:

1. Memory Offset and Pitch are first used to determine which part of the layer in memory to display.
2. If turned on, a scroll effect is then applied.
3. Rotation is applied to the layer.
4. Finally, swap and dither are applied in this order
5. The layer is alpha blended with previous layers and/or the ROI background.
6. If turned on, the gamma tables are applied to the final ROI output.
7. The ROI output is sent to the LCM and/or memory in the color format set by the corresponding register.

MediaTek Confidential Release for Cenon WCX

This document contains information that is proprietary to MediaTek Inc.

Unauthorized reproduction or disclosure of this information in whole or in part is strictly prohibited.

9000_00B4h Layer 0 Color Key Register — LCD_L0WINKEY

Bit	31	30	29	28	27	26	25	24	23	22	21	20	19	18	17	16
Name	CLRKEY[31:16]															
Type	R/W															
Bit	15	14	13	12	11	10	9	8	7	6	5	4	3	2	1	0
Name	CLRKEY[15:0]															
Type	R/W															

CLRKEY The source color key or destination color key, which depends on LCD_L0WINCON.SRC_KEYEN or LCD_L0WINCON.DST_KEYEN.

9000_00B8h Layer 0 Window Display Offset Register — LCD_L0WINOFS

Bit	31	30	29	28	27	26	25	24	23	22	21	20	19	18	17	16
Name						Y-OFFSET										
Type						R/W										
Bit	15	14	13	12	11	10	9	8	7	6	5	4	3	2	1	0
Name						X-OFFSET										
Type						R/W										

Y-OFFSET Layer 0 Window Row Offset in unit of pixel, please see Figure 51.

X-OFFSET Layer 0 Window Column Offset in unit of pixel, please see Figure 51.

9000_00BCh Layer 0 Window Display Start Address Register — LCD_L0WINADD

Bit	31	30	29	28	27	26	25	24	23	22	21	20	19	18	17	16
Name	ADDR															
Type	R/W															
Bit	15	14	13	12	11	10	9	8	7	6	5	4	3	2	1	0
Name	ADDR															
Type	R/W															

ADDR Layer 0 source start address (byte address), please see Figure 51. The address must be aligned to layer color depth boundary as the following table. Note: If the buffer is Page-size byte aligned, LCD will

MediaTek Confidential Release for Cenon WCX

This document contains information that is proprietary to MediaTek Inc.

Unauthorized reproduction or disclosure of this information in whole or in part is strictly prohibited.

benefit from a ~2-3% bandwidth increase. For example, if the page size of the memory is 16bytes, then a 16byte alignment address will increase bandwidth.

LCD_L0WINCON.CLRFMT	Color format	ADDR alignment
000	8 bpp index	no alignment constraint
001	RGB565	2 bytes alignment
010	ARGB8888 or PARGB8888	4 bytes alignment
011	RGB888	no alignment constraint
100	YUYV422	4 bytes alignment

9000_00C0h Layer 0 Window Size

LCD_L0WINSIZE

Bit	31	30	29	28	27	26	25	24	23	22	21	20	19	18	17	16
Name						ROW										
Type						R/W										
Bit	15	14	13	12	11	10	9	8	7	6	5	4	3	2	1	0
Name						COLUMN										
Type						R/W										

ROW Layer 0 Window Row Size in unit of pixel, please see Figure 51.

COLUMN Layer 0 Window Column Size in unit of pixel, please see Figure 51.

9000_00C4h Layer 0 Scroll Start Offset

LCD_L0WINSCRL

Bit	31	30	29	28	27	26	25	24	23	22	21	20	19	18	17	16
Name						Y-OFFSET										
Type						R/W										
Bit	15	14	13	12	11	10	9	8	7	6	5	4	3	2	1	0
Name						X-OFFSET										
Type						R/W										

Y-OFFSET Layer 0 Scroll Y Offset in unit of pixel, its value must satisfy Y-OFFSET < LCD_L0WINSIZE.ROW

X-OFFSET Layer 0 Scroll X Offset in unit of pixel, its value must satisfy X-OFFSET < LCD_L0WINSIZE.COLUMN

MediaTek Confidential Release for Cenon WCX

This document contains information that is proprietary to MediaTek Inc.

Unauthorized reproduction or disclosure of this information in whole or in part is strictly prohibited.

9000_00C8h Layer 0 Memory Offset

LCD_L0WINMOFS

Bit	31	30	29	28	27	26	25	24	23	22	21	20	19	18	17	16
Name						Y-OFFSET										
Type						R/W										
Bit	15	14	13	12	11	10	9	8	7	6	5	4	3	2	1	0
Name						X-OFFSET										
Type						R/W										

Y-OFFSET Layer 0 Memory Y Offset in unit of pixel, please see Figure 51. Y-OFFSET < LCD_L0WINSIZE.ROW + PICTURE ROW

X-OFFSET Layer 0 Memory X Offset in unit of pixel, please see Figure 51. X-OFFSET < LCD_L0WINSIZE.COLUMN + PICTURE COLUMN

PICTURE ROW and PICTURE COLUMN refer to the total size of the image in memory. See Figure 51 for clarification.

9000_00CCh Layer 0 Memory Pitch

LCD_L0WINPITCH

Bit	15	14	13	12	11	10	9	8	7	6	5	4	3	2	1	0
Name	PITCH															
Type	R/W	R/W	R/W	R/W	R/W	R/W	R/W	R/W	R/W	R/W	R/W	R/W	R/W	R/W	R/W	R/W

PITCH Layer 0 Memory Pitch in unit of byte, please see Figure 51. This should be set to the total width of the image in memory (PICTURE COLUMN) times the number of bytes per pixel. For 4 bpp color depth settings, the pitch must be a multiple of 4. For 2 bpp color depth settings, the pitch must be a multiple of 2. For 3 bpp (RGB888) color depth settings, the pitch may be a multiple of any number.

Note: Every field of every register of layer 1~3 is the same as that in layer 0 configuration register.

9000_0170h LCD Dither Control Register

LCD_DITHER_CON

Bit	31	30	29	28	27	26	25	24	23	22	21	20	19	18	17	16

MediaTek Confidential Release for Cenon WCX

This document contains information that is proprietary to MediaTek Inc.

Unauthorized reproduction or disclosure of this information in whole or in part is strictly prohibited.

Name									LFSR_R_SEED				LFSR_G_SEED			
Type									R/W	R/W	R/W	R/W	R/W	R/W	R/W	R/W
Bit	15	14	13	12	11	10	9	8	7	6	5	4	3	2	1	0
Name	LFSR_B_SEED						DB_R				DB_G				DB_B	
Type	R/W	R/W	R/W	R/W			R/W	R/W			R/W	R/W			R/W	R/W

DB_B Dither bit selection on blue channel

- **00** dither to bit 1, bit [0] of output data is 0.
- **01** dither to bit 2, bit [1:0] of output data are 0.
- **10** dither to bit 3, bit [2:0] of output data are 0.
- **11** dither to bit 4, bit [3:0] of output data are 0.

DB_G Dither bit selection on green channel

- **00** dither to bit 1, bit [0] of output data is 0.
- **01** dither to bit 2, bit [1:0] of output data are 0.
- **10** dither to bit 3, bit [2:0] of output data are 0.
- **11** dither to bit 4, bit [3:0] of output data are 0.

DB_R Dither bit selection on red channel

- **00** dither to bit 1, bit [0] of output data is 0.
- **01** dither to bit 2, bit [1:0] of output data are 0.
- **10** dither to bit 3, bit [2:0] of output data are 0.
- **11** dither to bit 4, bit [3:0] of output data are 0.

(e.g. RGB888 to RGB565, BD_R=2;BD_G=1;BD_B=2)

(e.g. RGB888 to RGB666, BD_R=1;BD_G=1;BD_B=1)

LFSR_B_SEED Seeds (LSB 4-bit) of blue channel Linear Feedback Shift Register

LFSR_G_SEED Seeds (LSB 4-bit) of green channel Linear Feedback Shift Register

LFSR_R_SEED Seeds (LSB 4-bit) of red channel Linear Feedback Shift Register

Note: LFSR_*_SEED shouldn't be zero, otherwise the linear feedback shift register will always be zero.

MediaTek Confidential Release for Cenon WCX

This document contains information that is proprietary to MediaTek Inc.

Unauthorized reproduction or disclosure of this information in whole or in part is strictly prohibited.

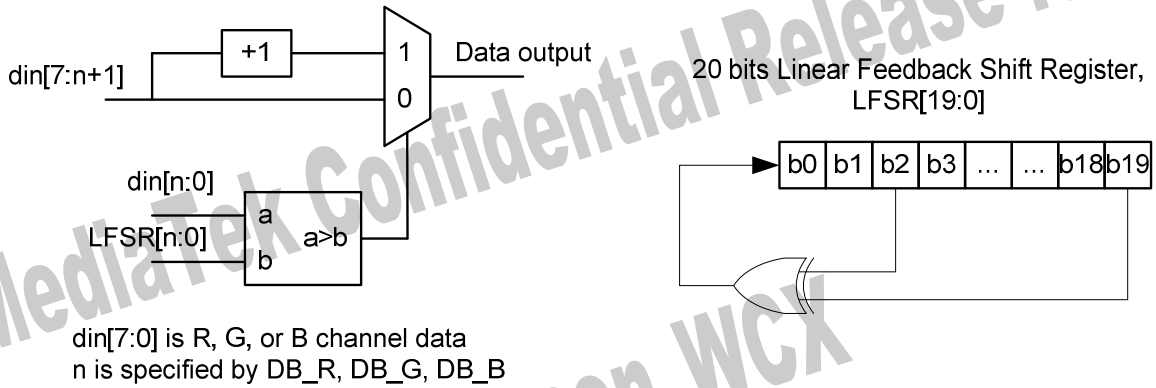

Figure 55 **Dither operation**

9000_01F0h Addcon Debug Register

LCD_DB_ADDCON

Bit	31	30	29	28	27	26	25	24	23	22	21	20	19	18	17	16
Name						Y-OFFSET										
Type						R										
Bit	15	14	13	12	11	10	9	8	7	6	5	4	3	2	1	0
Name						X-OFFSET										
Type						R										

Y-OFFSET Current ROI pixel requesting from memory y offset.
X-OFFSET Current ROI pixel requesting from memory x offset.

9000_01F4h Maincon Debug Register

LCD_DB_MCON

Bit	31	30	29	28	27	26	25	24	23	22	21	20	19	18	17	16
Name						Y-OFFSET										
Type						R										
Bit	15	14	13	12	11	10	9	8	7	6	5	4	3	2	1	0
Name						X-OFFSET										
Type						R										

Y-OFFSET Current ROI pixel writing to LCM y offset.
X-OFFSET Current ROI pixel writing to LCM x offset.

MediaTek Confidential Release for Cenon WCX

This document contains information that is proprietary to MediaTek Inc.

Unauthorized reproduction or disclosure of this information in whole or in part is strictly prohibited.

MediaTek Confidential Release for Cenon WCX

9000_01F8h W2mcon Debug Register LCD_DB_W2MCON

Bit	31	30	29	28	27	26	25	24	23	22	21	20	19	18	17	16
Name						Y-OFFSET										
Type						R										
Bit	15	14	13	12	11	10	9	8	7	6	5	4	3	2	1	0
Name						X-OFFSET										
Type						R										

Y-OFFSET Current ROI pixel writing to memory y offset.
X-OFFSET Current ROI pixel writing to memory x offset.

9000_01FCh Frame Count Debug Register LCD_DB_COUNT

Bit	31	30	29	28	27	26	25	24	23	22	21	20	19	18	17	16
Name										FCOUNT						
Type										R						
Bit	15	14	13	12	11	10	9	8	7	6	5	4	3	2	1	0
Name	FCOUNT															
Type	R															

FCOUNT LCD Update Time in cycles. The real time is FCOUNT*T, where T is the LCD working clock cycle time.

Below are registers which allow software to write/read directly to the DBI-B/DBI-C interface. The LCD allows software to issue consecutive writes/reads without delay. However on the last read/write, software should add a delay before writing to other memory location (non-LCD memory locations). Each port also has TE subports (ex. 0x4010, 0x5010, etc.) which adhere to the same rules as its master port. For example 0x4010 uses the same rules as 0x4000. However, these TE ports have special functions other then LCM write/read. Please refer to Table 59 for more information.

9000_4000h LCD Parallel 0 Interface Command Port LCD_PCMD0

Bit	31	30	29	28	27	26	25	24	23	22	21	20	19	18	17	16
Name	CMD[31:16]															
Type	R/W															
Bit	15	14	13	12	11	10	9	8	7	6	5	4	3	2	1	0
Name	CMD[15:0]															
Type	R/W															

This document contains information that is proprietary to MediaTek Inc.

Unauthorized reproduction or disclosure of this information in whole or in part is strictly prohibited.

CMD LCD parallel 0 command interface is mapped to this address. Read from/Write to this address will assert LCD parallel 0 chips select, and LPA0=0.

9000_4100h LCD Parallel 0 Interface Data Port LCD_PDAT0

Bit	31	30	29	28	27	26	25	24	23	22	21	20	19	18	17	16
Name	DATA[31:16]															
Type	R/W															
Bit	15	14	13	12	11	10	9	8	7	6	5	4	3	2	1	0
Name	DATA[15:0]															
Type	R/W															

DATA LCD parallel 0 data interface is mapped to this address. Read from/Write to this address will assert LCD parallel 0 chips select, and LPA0=1.

9000_5000h LCD Parallel 1 Interface Command Port LCD_PCMD1

Bit	31	30	29	28	27	26	25	24	23	22	21	20	19	18	17	16
Name	CMD[31:16]															
Type	R/W															
Bit	15	14	13	12	11	10	9	8	7	6	5	4	3	2	1	0
Name	CMD[15:0]															
Type	R/W															

CMD LCD parallel 1 command interface is mapped to this address. Read from/Write to this address will assert LCD parallel 1 chips select, and LPA0=0.

9000_5100h LCD Parallel 1 Interface Data Port LCD_PDAT1

Bit	31	30	29	28	27	26	25	24	23	22	21	20	19	18	17	16
Name	DATA[31:16]															
Type	R/W															
Bit	15	14	13	12	11	10	9	8	7	6	5	4	3	2	1	0
Name	DATA[15:0]															
Type	R/W															

MediaTek Confidential Release for Cenon WCX
MediaTek Confidential Release for Cenon WCX

This document contains information that is proprietary to MediaTek Inc.

Unauthorized reproduction or disclosure of this information in whole or in part is strictly prohibited.

DATA LCD parallel 1 data interface is mapped to this address. Read from/Write to this address will assert LCD parallel 1 chips select, and LPA0=1.

Parallel I/F data width (bits)	AHB write transaction size (bits)	data sequence in parallel I/F
8	8	hwdata[7:0]
	16	hwdata[7:0] hwdata[15:8]
	32	hwdata[7:0] hwdata[15:8] hwdata[23:16] hwdata[31:24]
9	8	hwdata[8:0]
	16	hwdata[8:0]
	32	hwdata[8:0] hwdata[24:16]
16	8	hwdata[15:0]
	16	hwdata[15:0]
	32	hwdata[15:0] hwdata[31:16]
18	8	hwdata[17:0]
	16	hwdata[17:0]
	32	hwdata[17:0]

Table 61 **Parallel interface transmission sequence when MCU writes to LCD_PDAT* or LCD_PCMD***

9000_8000h LCD Serial Interface Command Port LCD_SCMD

Bit	31	30	29	28	27	26	25	24	23	22	21	20	19	18	17	16

MediaTek Confidential Release for Cenon WCX

This document contains information that is proprietary to MediaTek Inc.

Unauthorized reproduction or disclosure of this information in whole or in part is strictly prohibited.

Name	CMD[31:16]															
Type	R/W															
Bit	15	14	13	12	11	10	9	8	7	6	5	4	3	2	1	0
Name	CMD[15:0]															
Type	R/W															

CMD LCD serial command interface is mapped to this address. Write to this address will assert LSA0=0 in 4-wire mode or A0 bit=0 in 3-wire mode.

9000_8100h LCD Serial Interface Data Port LCD_SDAT

Bit	31	30	29	28	27	26	25	24	23	22	21	20	19	18	17	16
Name	DATA[31:16]															
Type	R/W															
Bit	15	14	13	12	11	10	9	8	7	6	5	4	3	2	1	0
Name	DATA[15:0]															
Type	R/W															

DATA LCD serial data interface is mapped to this address. Write to this address will assert LSA0=1 in 4-wire mode or A0 bit=1 in 3-wire mode.

LCD_SCNF.3_WIRE	LCD_SCNF.IF_SIZE	data sequence in serial I/F
0	8	hwdata[7:0]
	9	hwdata[8:0]
	16	hwdata[15:0]
	18	hwdata[17:0]
	24	hwdata[23:0]
	32	hwdata[31:0]
1	8	{cmd_data, hwdata[7:0]}
	9	{cmd_data, hwdata[8:0]}
	16	{cmd_data, hwdata[15:0]}

MediaTek Confidential Release for Cenon WCX

This document contains information that is proprietary to MediaTek Inc.

Unauthorized reproduction or disclosure of this information in whole or in part is strictly prohibited.

	18	{cmd_data, hwdata[17:0]}
	24	{cmd_data, hwdata[23:0]}
	32	{cmd_data, hwdata[31:0]}

Table 62 **Serial interface transmission sequence when MCU writes to LCD_SDAT, LCD_SCMD**

Serial transmission starts from the MSB of "data sequence in serial I/F". “cmd_data” is the command/data indicator, 0 for command and 1 for data. If MCU writes the command port, cmd_data=0. If MCU writes the data port, cmd_data=1. To read a serial LCM, software must first write a read command to this interface. Next software, can read this interface to retrieve data. CS should be kept low while performing this operation. Please note that the AHB transaction size cannot be less then the LCD_SCNF.IF_SIZE or unknown data may be transferred to the LCM.

9000_C000h~C07F LCD Interface Command/Parameter Registers LCD_COMD

Bit	31	30	29	28	27	26	25	24	23	22	21	20	19	18	17	16
Name									C0						COMM[17:16]	
Type									R/W						R/W	
Bit	15	14	13	12	11	10	9	8	7	6	5	4	3	2	1	0
Name	COMM[15:0]															
Type	R/W															

COMM Command and Parameter for LCD Module.

C0 Command/data indicator.

- **0** Write COMM[17:0] to ROI Data Address(LCD_WROIDADD).
- **1** Write COMM[17:0] to ROI Command Address (LCD_WROICADD).

There are 16 entries in command queue 1. When LCD is in the busy state, software must not read/write to the command queue.

5.2 Camera Interface

MT6252 CAM support VGA Sensor YUV422/RGB565 interface. No other color process include in CAM.

MediaTek Confidential Release for Cenon WCX

This document contains information that is proprietary to MediaTek Inc.

Unauthorized reproduction or disclosure of this information in whole or in part is strictly prohibited.

5.2.1 Register Table

CAM : **84020000**h

REGISTER ADDRESS	REGISTER NAME	SYNONYM
CAM + 0000h	TG Phase Counter Register	CAM_PHSCNT
CAM + 0004h	Sensor Size Configuration Register	CAM_CAMWIN
CAM + 0008h	TG Grab Range Start/End Pixel Configuration Register	CAM_GRABCOL
CAM + 000Ch	TG Grab Range Start/End Line Configuration Register	CAM_GRABROW
CAM + 0010h	Sensor Mode Configuration Register	CAM_CSMODE
CAM + 0018h	View Finder Mode Control Register	CAM_VFCON
CAM + 001Ch	Camera Module Interrupt Enable Register	CAM_INTEN
CAM + 0020h	Camera Module Interrupt Status Register	CAM_INTSTA
CAM + 0024h	Camera Module Path Config Register	CAM_PATH
CAM + 0190h	Sensor Test Module Configuration Register 1	CAM_MDLCFG1
CAM + 0194h	Sensor Test Module Configuration Register 2	CAM_MDLCFG2
CAM + 01A0h	Camera to CRZ Control Register	CAMCRZ_CTRL
CAM + 01A4h	Camera to CRZ Status Register	CAMCRZ_STA
CAM + 01D4h	TG Status Register	TG_STATUS
CAM + 01D8h	Cam Reset Register	CAM_RESET

Table 63 Camera Interface Register Map

MediaTek Confidential Release for Cenon WCX

This document contains information that is proprietary to MediaTek Inc.

Unauthorized reproduction or disclosure of this information in whole or in part is strictly prohibited.

5.2.1.1 TG Register Definitions

CAM+0000h TG Phase Counter Register **CAM_PHSCNT**

Bit	31	30	29	28	27	26	25	24	23	22	21	20	19	18	17	16
Name	PCEN		CLKEN	CLKPOL	CLKCNT				CLKRS				CLKFL			
Type	R/W		R/W	R/W	R/W				R/W				R/W			
Reset	0		0	0	1				0				1			
Bit	15	14	13	12	11	10	9	8	7	6	5	4	3	2	1	0
Name	HVALID_EN	CAM_PCLK_INV		PXCLK_IN	CLKFL_POL		TGCLK_SEL		PIXCNT				DLATCH			
Type	R/W	R/W		R/W	R/W		R/W		R/W				R/W			
Reset	0	0		0	0		0		1				1			

PCEN TG phase counter enable control

CLKEN Enable sensor master clock (mclk) output to sensor.

CLKPOL Sensor master clock polarity control

CLKCNT Sensor master clock frequency divider control.
Sensor master clock will be TGCLK_SEL/(CLKCNT+1)

CLKRS Sensor master clock rising edge control

CLKFL Sensor master clock falling edge control

HVALID_EN Sensor hvalid or href enable

CAM_PCLK_INV Pixel clock inverse in CAM.

PXCLK_IN Pixel clock sync enable. If sensor master based clock is from 48MHz, PXCLK_IN must be enabled.

CLKFL_POL Sensor clock falling edge polarity

TGCLK_SEL Sensor master based clock selection (0: 52 Mhz, 1: 48MHz, 2: 104MHz)

PIXCNT Sensor data latch frequency control

DLATCH Sensor data latch position control

Example waveform(CLKCNT=1,CLKRS=0,CLKFL=1,PIXCNT=3,DLATCH=2)

MediaTek Confidential Release for Cenon WCX

This document contains information that is proprietary to MediaTek Inc.

Unauthorized reproduction or disclosure of this information in whole or in part is strictly prohibited.

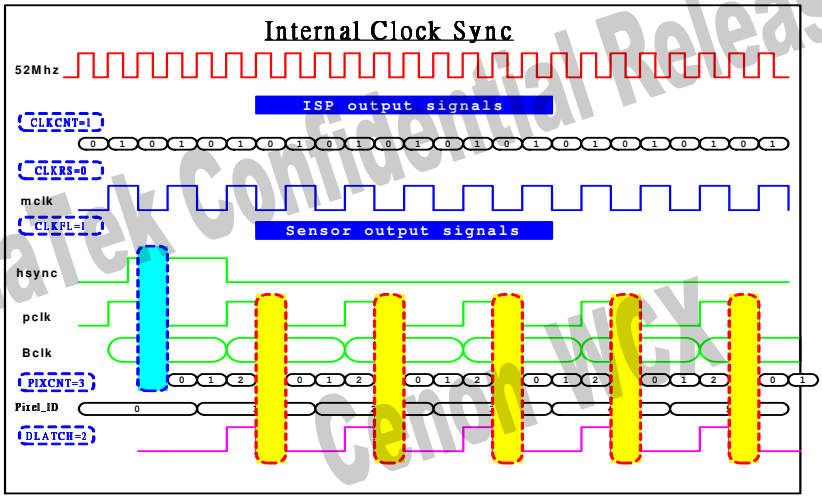

CAM+0004h Sensor Size Configuration Register CAM_CAMWIN

Bit	31	30	29	28	27	26	25	24	23	22	21	20	19	18	17	16
Name				PIXELS												
Type				R/W												
Reset				1fffh												
Bit	15	14	13	12	11	10	9	8	7	6	5	4	3	2	1	0
Name					LINES											
Type					R/W											
Reset					fffh											

PIXEL Total input pixel number

LINE Total input line number

CAM+0008h TG Grab Range Start/End Pixel Configuration Register CAM_GRABCOL

Bit	31	30	29	28	27	26	25	24	23	22	21	20	19	18	17	16
Name					START											
Type					R/W											
Reset					0											
Bit	15	14	13	12	11	10	9	8	7	6	5	4	3	2	1	0
Name					END											
Type					R/W											
Reset					0											

START Grab start pixel number (first pixel start from 0)

END Grab end pixel number (first pixel start from 0)

MediaTek Confidential Release for Cenon WCX

This document contains information that is proprietary to MediaTek Inc.

Unauthorized reproduction or disclosure of this information in whole or in part is strictly prohibited.

CAM+000Ch TG Grab Range Start/End Line Configuration Register CAM_GRABROW

Bit	31	30	29	28	27	26	25	24	23	22	21	20	19	18	17	16
Name					START											
Type					R/W											
Reset					0											
Bit	15	14	13	12	11	10	9	8	7	6	5	4	3	2	1	0
Name					END											
Type					R/W											
Reset					0											

START Grab start line number (first line start from 1, line 0 is inside VSYNC). Note that this number should be set start from 1, set 0 to this parameter will cause memory output data uncompleted.

END Grab end line number (first line start from 1)

CAM+0010h Sensor Mode Configuration Register CAM_CSMODE

Bit	31	30	29	28	27	26	25	24	23	22	21	20	19	18	17	16
Name																
Type																
Reset																
Bit	15	14	13	12	11	10	9	8	7	6	5	4	3	2	1	0
Name									VSPOL	HSPOL	PWRON	RST	AUTO			EN
Type									R/W	R/W	R/W	R/W	R/W			R/W
Reset									0	0	0	0	0			0

VSPOL Sensor Vsync input polarity

HSPOL Sensor Hsync input polarity

AUTO Auto lock sensor input horizontal pixel numbers enable

MediaTek Confidential Release for Cenon WCX

This document contains information that is proprietary to MediaTek Inc.

Unauthorized reproduction or disclosure of this information in whole or in part is strictly prohibited.

EN Sensor process counter enable

CAM+0018h View Finder Mode Control Register CAM_VFCON

Bit	31	30	29	28	27	26	25	24	23	22	21	20	19	18	17	16
Name	AV_SYNC_SEL	VD_INT_POL			AV_SYNC_LINENO[11:0]											
Type	R/W	R/W			R/W											
Reset	0	0			0											
Bit	15	14	13	12	11	10	9	8	7	6	5	4	3	2	1	0
Name						SP_DELAY[2:0]			SP_MODE	TAKE_PIC				FR_CON		
Type						R/W			R/W	R/W				R/W		
Reset						0			0	0				0		

AV_SYNC_SEL Av_sync start point selection
- **0** Start from AV_SYNC_LINENO
- **1** Start from vsync

VD_INT_POL Vsync interrupt polarity
- **0** Vsync rising edge
- **1** Vsync Falling edge

AV_SYNC_LINENO Av_sync desired line counts

SP_DELAY[2:0] Still Picture Mode Frame Delay. When SP_DELAY is nonzero, TAKE_PIC will start to trigger after SP_DELAY Vsync singal.

SP_MODE Still Picture Mode
- **0** Preview mode, ISP will process every frame sensor send
- **1** Capture mode, ISP will only process first frame sensor send after TAKE_PIC is set

TAKE_PIC Take Picture Request

FR_CON Frame Sampling Rate Control
- **000** Every frame is sampled
- **001** One frame is sampled every 2 frames
- **010** One frame is sampled every 3 frames
- **011** One frame is sampled every 4 frames
- **100** One frame is sampled every 5 frames
- **101** One frame is sampled every 6 frames
- **110** One frame is sampled every 7 frames
- **111** One frame is sampled every 8 frames

MediaTek Confidential Release for Cenon WCX

This document contains information that is proprietary to MediaTek Inc.

Unauthorized reproduction or disclosure of this information in whole or in part is strictly prohibited.

MediaTek Confidential Release for Cenon WCX

CAM+001Ch Camera Module Interrupt Enable Register CAM_INTEN

Bit	31	30	29	28	27	26	25	24	23	22	21	20	19	18	17	16
Name	VSYNC_INT_EN															INT_WCLR_EN
Type	R/W															R/W
Reset	0															0
Bit	15	14	13	12	11	10	9	8	7	6	5	4	3	2	1	0
Name								AV_SYNC_INT	FLASH_INT			ISPDONE	IDLE		REZOVRUN	EXPDO
Type								R/W	R/W			R/W	R/W		R/W	R/W
Reset								0	0			0	0		0	0

VSYNC_INT_EN Vsync interrupt and Flash interrupt switch
- **0** Flash interrupt
- **1** Vsync interrupt

INT_WCLR_EN interrupt write clear enable
PCA_INT PCA interrupt enable
FLK_INT_EN Flicker interrupt enable
AV_SYNC_INT AV sync interrupt enable
FLASH_INT Flash interrupt enable, note that **VSYNC_INT_EN** switch flash and vsync interrupt
AEDONE AE done interrupt enable
ISPDONE ISP done interrupt enable
IDLE Returning idle state interrupt enable
REZOVRUN CRZ overrun interrupt enable
EXPDO Exposure done interrupt enable

Interrupt Condition Chart

This document contains information that is proprietary to MediaTek Inc.

Unauthorized reproduction or disclosure of this information in whole or in part is strictly prohibited.

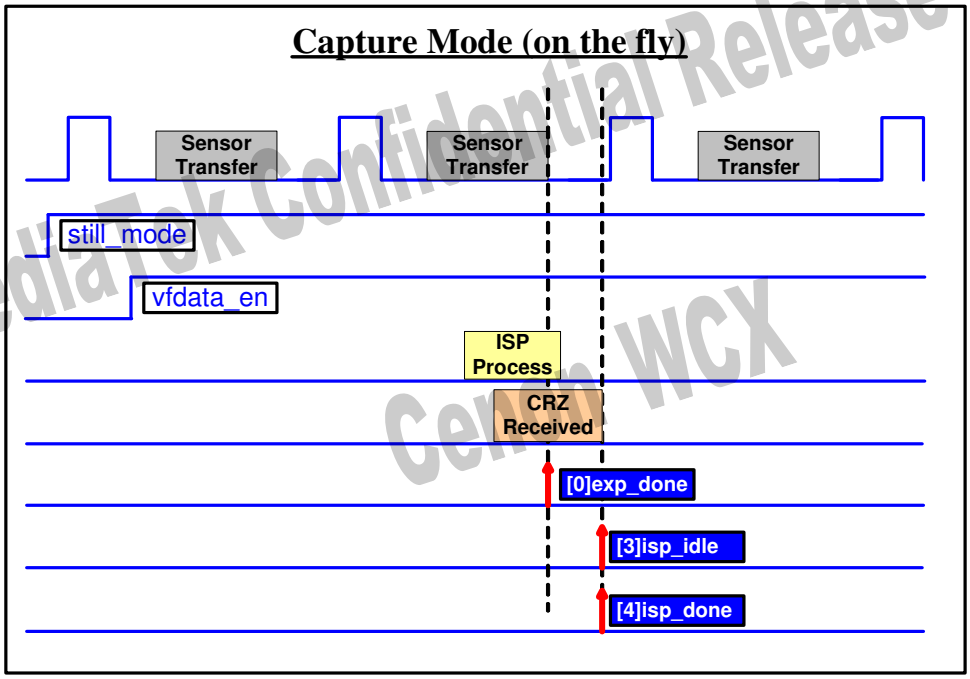

MediaTek Confidential Release for Cenon WCX

This document contains information that is proprietary to MediaTek Inc.

Unauthorized reproduction or disclosure of this information in whole or in part is strictly prohibited.

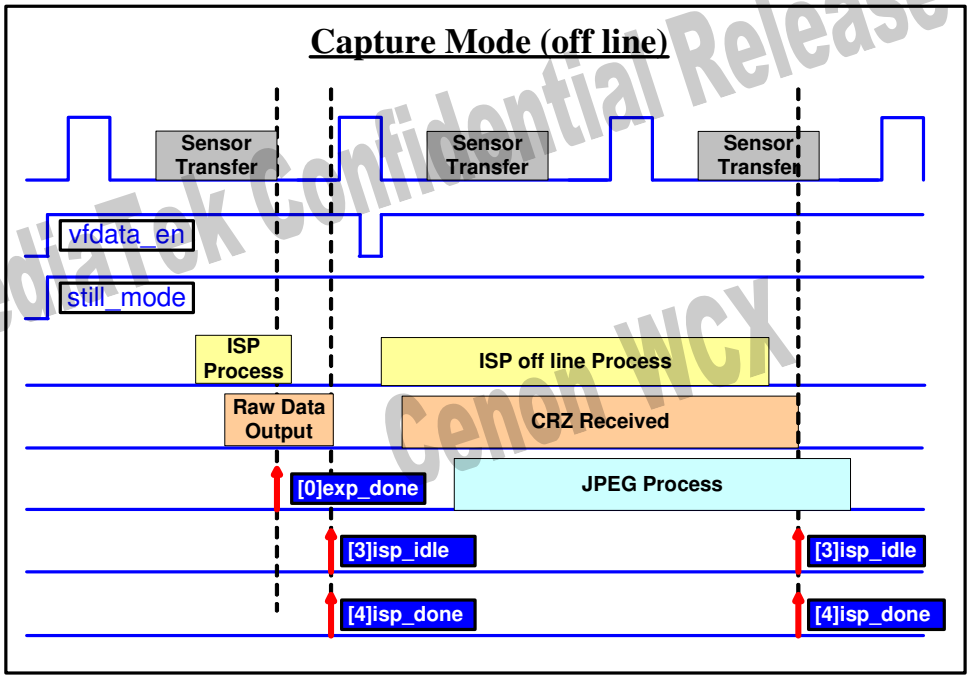

MediaTek Confidential Release for Cenon WCX

This document contains information that is proprietary to MediaTek Inc.

Unauthorized reproduction or disclosure of this information in whole or in part is strictly prohibited.

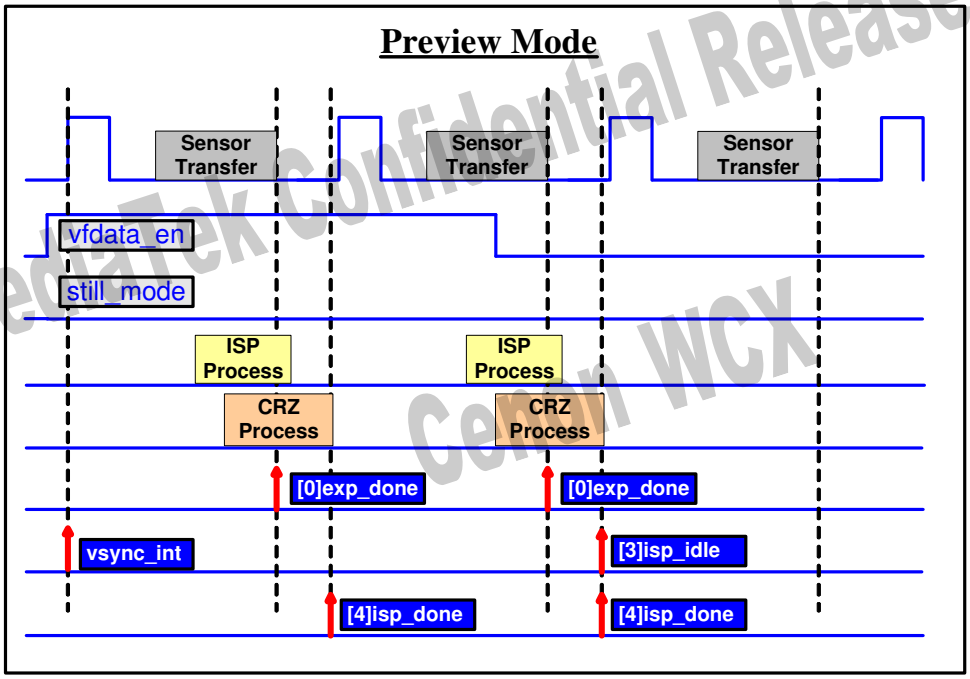

CAM+0020h Camera Module Interrupt Status Register CAM_INTSTA

Bit	31	30	29	28	27	26	25	24	23	22	21	20	19	18	17	16
Name																
Type																
Reset																
Bit	15	14	13	12	11	10	9	8	7	6	5	4	3	2	1	0
Name								AV_SYNC_INT	FLASH_INT			ISPDONE	IDLE		REZOVRUN	EXPDO
Type								R	R			R	R		R	R
Reset								0	0			0	0		0	0

This register show the status of corresponding bit of CAM_INTEN. Note that default interrupt status is read clear. If CAM_INTEN[16] is set 1, then interrupt status is write clear.

MediaTek Confidential Release for Cenon WCX

This document contains information that is proprietary to MediaTek Inc.

Unauthorized reproduction or disclosure of this information in whole or in part is strictly prohibited.

AV_SYNC_INT AV sync interrupt status, occurred when desired line count equal **AV_SYNC_LINENO** in CAM_VFCON(CAM+0018h)

FLASH_INT TG interrupt status, occurred when flash light pulse is done

ISPDONE ISP done interrupt status, occurred when ISP finish full frame process

IDLE Returning idle state interrupt status, occurred when ISP is in IDLE state

REZOVRUN Resizer over run interrupt status, occurred when ISP to CRZ buffer is overrun

EXPDO Exposure done interrupt status, occurred when sensor send full frame

CAM+0024h Camera Module Path Config Register CAM_PATH

Bit	31	30	29	28	27	26	25	24	23	22	21	20	19	18	17	16
Name																
Type																
Reset																
Bit	15	14	13	12	11	10	9	8	7	6	5	4	3	2	1	0
Name			SWAP_Y	SWAP_CBCR		INTYPE_SEL										
Type			R/W	R/W		R/W										
Reset			0	0		0										

SWAP_Y YCbCr in Swap Y, note that **INTYPE_SEL** should be set to 001 or 101

SWAP_CBCR YCbCr in Swap Cb Cr, note that **INTYPE_SEL** should be set to 001 or 101

INTYPE_SEL Input type selection

- **000** Reserved
- **001** YUV422 Format
- **101** YCbCr422 Format
- **010** RGB565 Format
- **Others** Reserved

CAM+0190h Sensor Test Model Configuration Register 1 CAM_MDLCFG1

Bit	31	30	29	28	27	26	25	24	23	22	21	20	19	18	17	16
Name	VSYNC								IDLE_PIXEL_PER_LINE							
Type	R/W								R/W							
Reset	0								0							
Bit	15	14	13	12	11	10	9	8	7	6	5	4	3	2	1	0
Name			LINECHG_EN	FULL_RANGE			ON	RST	STILL	PATTERN	PIXEL_SEL		CLK_DIV			
Type			R/W	R/W			R/W	R/W	R/W	R/W	R/W		R/W			
Reset			0	0			0	0	0	0	0		0			

VSYNC VSYNC high duration in line unit(IDLE_PIXEL_PER_LINE + PIXEL)

MediaTek Confidential Release for Cenon WCX

This document contains information that is proprietary to MediaTek Inc.

Unauthorized reproduction or disclosure of this information in whole or in part is strictly prohibited.

IDLE_PIXEL_PER_LINE HSYNC low duration in pixel unit
LINECHG_EN Pattern 0 2 lines change mode enable
FULL_RANGE Sensor Model Full Range Enable. When full range is enable, pattern data value will increase
progressively every line output.
ON Enable Sensor Model.
RST Reset Sensor Model
STILL Still picture Mode. Set 1 will generate fix pattern.
PATTERN Sensor Model Test Pattern Selection
PIXEL_SEL Sensor Model output pixel selection.
00 All pixels
01 01 pixel
10 10 pixel
11 00 and 11 pixels
CLK_DIV Pixel_Clock/System_Clock Ratio

CAM +0194h Sensor Test Model Configuration Register 2 CAM_MDLCFG2

Bit	31	30	29	28	27	26	25	24	23	22	21	20	19	18	17	16
Name						LINE										
Type						R/W										
Reset						0										
Bit	15	14	13	12	11	10	9	8	7	6	5	4	3	2	1	0
Name						PIXEL										
Type						R/W										
Reset						0										

LINE Sensor Model Line Number
PIXEL Sensor Model Pixel Number (HSYNC high duration in pixel unit)

CAM +01A0h Camera to CRZ Control Register CAMCRZ_CTRL

Bit	31	30	29	28	27	26	25	24	23	22	21	20	19	18	17	16

MediaTek Confidential Release for Cenon WCX

This document contains information that is proprietary to MediaTek Inc.

Unauthorized reproduction or disclosure of this information in whole or in part is strictly prohibited.

Name				CAMCRZ_INIT_EN	CAMCRZ_INIT_PERIOD						REZ_OVRUN_FLIMIT_EN	REZ_OVRUN_FLIMIT_NO			
Type				R/W	R/W						R/W	R/W			
Reset				0	10						0	0			
Bit	15	14	13	12	11	10	9	8	7	6	5	4	3	2	1	0
Name																
Type																
Reset																

CAMCRZ_INIT_EN Camera to CRZ frame initialization scheme enable. In frame initialization, camera will block signal to CRZ and assert initial signal to CRZ when pixel dropped.

CAMCRZ_INIT_PERIOD Camera to CRZ initialization signal active period

REZ_OVRUN_FLIMIT_EN Camera to CRZ interface overrun frame count limit enable. When enabled, if REZ_OVRUN_FCOUNT (CAM+01A4[19:16]) equal REZ_OVRUN_FLIMIT_NO,REZOVRUN (CAM+0020[1]) will be asserted.

REZ_OVRUN_FLIMIT_NO Camera to CRZ interface overrun frame count limit number.

CAM +01A4h Camera to CRZ Status Register CAMCRZ_STA

Bit	31	30	29	28	27	26	25	24	23	22	21	20	19	18	17	16
Name			CAMCRZ_FIFOCNT										REZ_OVRUN_FCOUNT			
Type			R										R			
Reset																
Bit	15	14	13	12	11	10	9	8	7	6	5	4	3	2	1	0
Name																
Type																
Reset																

CAMCRZ_FIFOCNT Camera to CRZ FIFO Count. There are 48 pixels buffer in Camera.

REZ_OVRUN_FCOUNT Camera to Resizer interface over run frame count. This frame count is for capture mode. REZ_OVRUN_FCOUNT will be reset every time TAKE_PIC (CAM _ 0018 [6]) is set to 0, will be add 1 when REZOVRUN occurred in a frame.

CAM+01D4h TG Status Register TG_STATUS

Bit	31	30	29	28	27	26	25	24	23	22	21	20	19	18	17	16
Name		CAM_BUSY	CAPTURE_BUSY	SYN_VF_DATA_EN	LINE_COUNT[11:0]											

MediaTek Confidential Release for Cenon WCX

This document contains information that is proprietary to MediaTek Inc.

Unauthorized reproduction or disclosure of this information in whole or in part is strictly prohibited.

Type		R	R	R	R											
Reset																
Bit	15	14	13	12	11	10	9	8	7	6	5	4	3	2	1	0
Name				PIXEL_COUNT[12:0]												
Type				R												
Reset																

CAM_BUSY CAM busy flag

CAPTURE_BUSY Capture busy flag

SYN_VF_DATA_EN View finder double buffer register status

LINE_COUNT Input frame line counter

PIXEL_COUNT Input frame pixel counter

CAM +01D8h CAM RESET Register CAM_RESET

Bit	31	30	29	28	27	26	25	24	23	22	21	20	19	18	17	16
Name				CAM_CS[5:0]												SW_RESET
Type				R												RW
Reset				1												0
Bit	15	14	13	12	11	10	9	8	7	6	5	4	3	2	1	0
Name	CAM_FRAME_COUNT[7:0]															HARD_RESET
Type	R															RW
Reset	0															0

CAM_CS CAM status. There are 6 states

- **1** cam_idle
- **2** preview_idle
- **4** preview_process
- **8** preview_wait
- **16** capture_process
- **32** capture_done

SW_RESET Camera software reset. When software reset is enable, camera will automatically stop process including memory access and will assert hardware reset at suitable time. After reset is done, SW_RESET will be de-assert.

MediaTek Confidential Release for Cenon WCX

This document contains information that is proprietary to MediaTek Inc.

Unauthorized reproduction or disclosure of this information in whole or in part is strictly prohibited.

CAM_FRAME_COUNT	CAM process frame count number
HARD_RESET	ISP reset. Note that reset should be assert longer than 100us to make sure GMC command done.

MediaTek Confidential Release for Cenon WCX

MediaTek Confidential Release for Cenon WCX

This document contains information that is proprietary to MediaTek Inc.

Unauthorized reproduction or disclosure of this information in whole or in part is strictly prohibited.

6 Analog Front-end & Analog Blocks

6.1 General Description

To communicate with analog blocks, a common control interface for all analog blocks is implemented. In addition, there are some dedicated interfaces for data transfer. The common control interface translates APB bus write and read cycle for specific addresses related to analog front-end control. During writing or reading of any of these control registers, there is a latency associated with transferring of data to or from the analog front-end. Dedicated data interface of each analog block is implemented in the corresponding digital block. The Analog Blocks includes the following analog function for complete GSM/GPRS base-band signal processing:

1. *Base-band RX*: For I/Q channels base-band A/D conversion
2. *RF Control*: One DAC for automatic power control (APC) is included. Its output is provided to external RF power amplifier.
3. *Auxiliary ADC*: Providing an ADC for battery and other auxiliary analog function monitoring
4. *Audio mixed-signal blocks:* It provides complete analog voice signal processing including microphone amplification, A/D conversion, D/A conversion, earphone driver, and etc. Besides, dedicated stereo D/A conversion and amplification for audio signals are included).
5. *Clock Generation*: A clock squarer for shaping system clock, and three PLLs that provide clock signals to DSP, MCU, USB, and SFC units are included
6. *XOSC32*: It is a 32-KHz crystal oscillator circuit for RTC application Analog Block Descriptions

6.1.1 BBRX

6.1.1.1 Block Descriptions

The receiver (RX) performs base-band I/Q channels downlink analog-to-digital conversion:

3. *Analog input multiplexer:* For each channel, a 4-input multiplexer that supports offset calibration is included.
4. *A/D converter:* Two 14-bit sigma-delta ADCs perform I/Q digitization for further digital signal processing.

6.1.1.2 Functional Specifications

The functional specifications of the base-band downlink receiver are listed in the following table.

MediaTek Confidential Release for Cenon WCX

This document contains information that is proprietary to MediaTek Inc.

Unauthorized reproduction or disclosure of this information in whole or in part is strictly prohibited.

Symbol	Parameter	Min	Typical	Max	Unit
N	Resolution		14		Bit
FC	Clock Rate		26		MHz
FS	Output Sampling Rate		13/12		MSPS
	Input Swing When GAIN=’00’ When GAIN=’01’ When GAIN=’10’ When GAIN=’11’		0.8*AVDD 0.4*AVDD 0.57*AVDD 0.33*AVDD		Vpk,diff
OE	Offset Error		+/- 10		mV
FSE	Full Swing Error		+/- 30		mV
	I/Q Gain Mismatch			0.5	dB
SINAD	Signal to Noise and Distortion Ratio - 45kHz sine wave in [0:90] kHz bandwidth - 145kHz sine wave in [10:190] kHz bandwidth	65 65			dB dB
ICN	Idle channel noise - [0:90] kHz bandwidth - [10:190] kHz bandwidth			-74 -70	dB dB
DR	Dynamic Range - [0:90] kHz bandwidth - [10:190] kHz bandwidth	74 70			dB dB
RIN	Input Resistance	75			kΩ
DVDD	Digital Power Supply	1.08	1.2	1.32	V
AVDD	Analog Power Supply	2.52	2.8	3.08	V
T	Operating Temperature	-20		85	℃
	Current Consumption Power-up Power-Down		5 5		mA µA

Table 64 Base-band Downlink Specifications

MediaTek Confidential Release for Cenon WCX

This document contains information that is proprietary to MediaTek Inc.

Unauthorized reproduction or disclosure of this information in whole or in part is strictly prohibited.

6.1.2 APC-DAC

6.1.2.1 Block Descriptions

The APC-DAC is a 10-bits DAC with output buffer aimed for automatic power control. Here blow are its functional specification tables.

6.1.2.2 Function Specifications

Symbol	Parameter	Min	Typical	Max	Unit
N	Resolution		10		Bit
FS	Sampling Rate			1.0833	MSPS
	99% Settling Time (Full Swing on Maximal Capacitance)			5	µS
	99% Settling Time (100 Code)			1/1.0833	µS
	Output Swing	0		AVDD	V
	Power-down Glitch* (After Serial Resistor)			10	mV
	Drive Capacitance		200		pF
	Drive Resistance		10		kΩ
DNL	Differential Nonlinearity		+/- 0.5		LSB
INL	Integral Nonlinearity		+/- 1.0		LSB
OE	Offset Error		+/- 30		mV
DVDD	Digital Power Supply	1.08	1.2	1.32	V
AVDD	Analog Power Supply	2.52	2.8	3.08	V
T	Operating Temperature	-20		85	℃
	Current Consumption Power-up Power-Down		 200 1		 µA µA

Table 65 APC-DAC Specifications

* APCDAC power-down glitch reference load configuration:

MediaTek Confidential Release for Cenon WCX

This document contains information that is proprietary to MediaTek Inc.

Unauthorized reproduction or disclosure of this information in whole or in part is strictly prohibited.

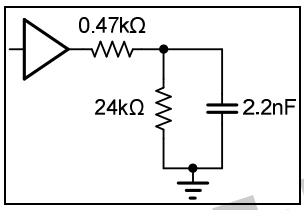

6.1.3 Auxiliary ADC

6.1.3.1 Block Descriptions

The auxiliary ADC includes the following functional blocks:

1. *Analog Multiplexer:* The analog multiplexer selects signal from one of the several auxiliary input pins. Real word message to be monitored, like temperature, should be transferred to the voltage domain.
2. *10 bits A/D Converter:* The ADC converts the multiplexed input signal to 10-bit digital data.

6.1.3.2 Function Specifications

The functional specifications of the auxiliary ADC are listed in the following table.

Symbol	Parameter	Min	Typical	Max	Unit
N	Resolution		10		Bit
FC	Clock Rate		1.0833		MHz
*FS	Sampling Rate @ N-Bit		1.0833/(N +1)		MSPS
	Input Range	0		AVDD	V
CIN	Input Capacitance Unselected Channel Selected Channel			 50 1.2	 fF pF
RIN	Input Resistance Unselected Channel Selected Channel	 10 1.8			 MΩ MΩ
	Clock Latency		11		1/FC
DNL	Differential Nonlinearity		+1.0/-1.0		LSB

MediaTek Confidential Release for Cenon WCX

This document contains information that is proprietary to MediaTek Inc.

Unauthorized reproduction or disclosure of this information in whole or in part is strictly prohibited.

INL	Integral Nonlinearity		+1.0/-1.0		LSB
OE	Offset Error		+/- 10		mV
**FSE	Full Swing Error		+/- 10		mV
SINAD	Signal to Noise and Distortion Ratio (10-KHz Full Swing Input & 1.0833-MHz Clock Rate)		50		dB
DVDD	Digital Power Supply	1.08	1.2	1.32	V
AVDD	Analog Power Supply	2.52	2.8	3.08	V
T	Operating Temperature	-20		85	℃
	Current Consumption Power-up Power-Down		 150 1		 µA µA

Table 66 The Functional specification of Auxiliary ADC

* FS: Sampling rate can reach 1.0833/(N+1) MSPS with special software configuration

** FSE: Full swing error compared with real time analog power supply of AUXADC (AVDD)

6.1.4 Audio mixed-signal blocks

6.1.4.1 Block Descriptions

Audio mixed-signal blocks (AMB) integrate complete voice uplink/downlink and audio playback functions. As shown in the following figure, it includes mainly three parts. The first consists of stereo audio DACs and headset amplifiers for audio playback and external radio playback. The second is the voice downlink path, including voice-band amplifiers, which produces voice signal to earphone or other auxiliary output device. The last is the voice uplink path, which is the interface between microphone (or other auxiliary input device) input and MT6252 DSP. A set of bias voltage is provided for external electric microphone.

MediaTek Confidential Release for Cenon WCX

This document contains information that is proprietary to MediaTek Inc.

Unauthorized reproduction or disclosure of this information in whole or in part is strictly prohibited.

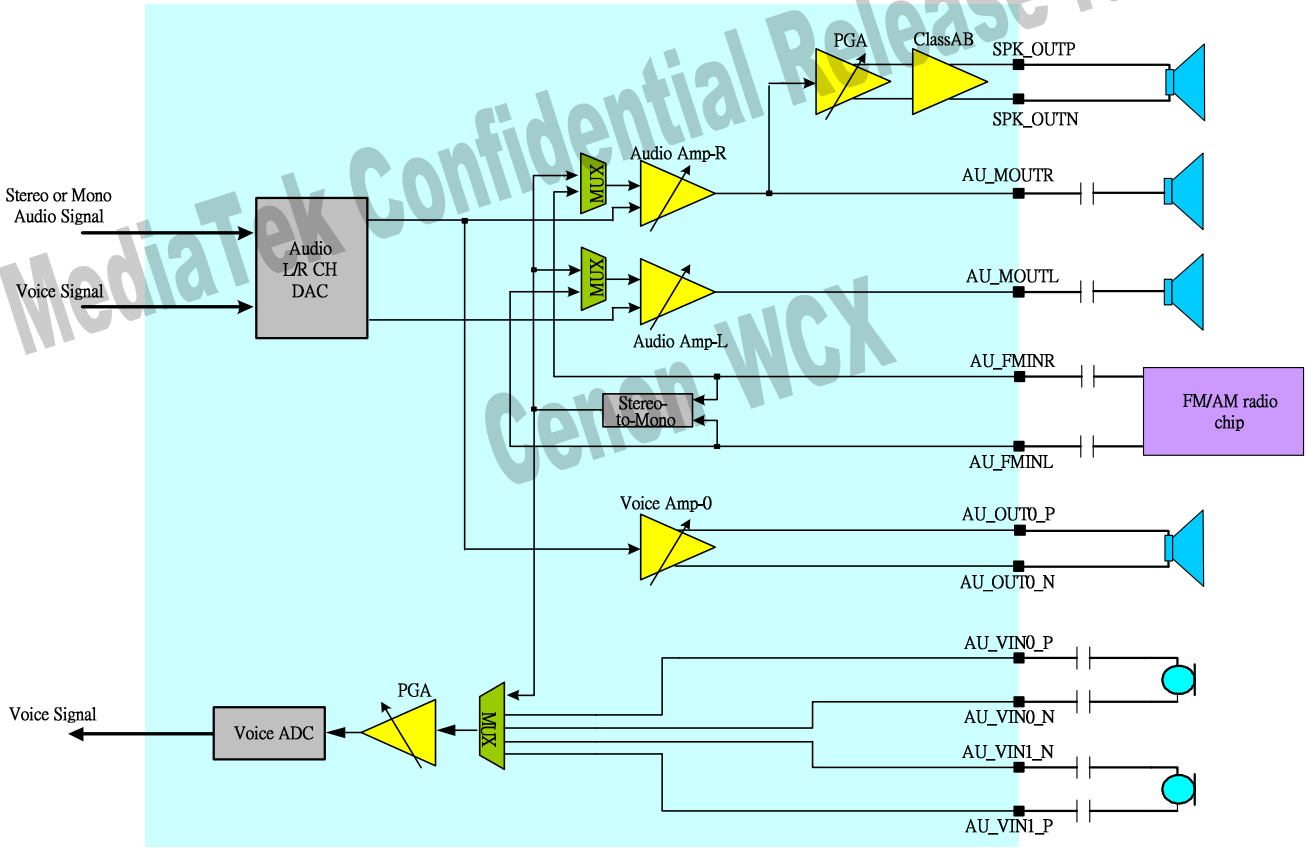

Figure 56 Block diagram of audio mixed-signal blocks.

6.1.4.2 Functional Specifications

The following table gives functional specifications of voice-band uplink/downlink blocks.

Symbol	Parameter	Min	Typical	Max	Unit
FS	Sampling Rate		6500		KHz
CREF	Decoupling Cap Between AU_VCM and AGND28_AFE		1		uF
DVDD	Digital Power Supply	1.08	1.2	1.32	V

MediaTek Confidential Release for Cenon WCX

This document contains information that is proprietary to MediaTek Inc.

Unauthorized reproduction or disclosure of this information in whole or in part is strictly prohibited.

AVDD	Analog Power Supply	2.52	2.8	3.08	V
T	Operating Temperature	-20		85	℃
IDC	Current Consumption		5		mA
VMIC	Microphone Biasing Voltage		1.9	2.2	V
IMIC	Current Draw From Microphone Bias Pins			2	mA
Uplink Path[1]					
IDC	Current Consumption		1.5		mA
SINAD	Signal to Noise and Distortion Ratio Input Level: -40 dbm0 Input Level: 0 dbm0	 29	 69		 dB dB
RIN	Input Impedance (Differential)	13	20	27	KΩ
ICN	Idle Channel Noise			-67	dBm0
XT	Crosstalk Level			-66	dBm0
Downlink Path[2]					
SINAD	Signal to Noise and Distortion Ratio Input Level: -40 dBm0 Input Level: 0 dBm0	 29	69		 dB dB
RLOAD	Output Resistor Load (Differential)	25.6			Ω
CLOAD	Output Capacitor Load			1000	pF
ICN	Idle Channel Noise of Transmit Path			-67	dBm0
XT	Crosstalk Level on Transmit Path			-66	dBm0

Table 67 Functional specifications of analog voice blocks

Functional specifications of the audio blocks are described in the following.

Symbol	Parameter	Min	Typical	Max	Unit
FCK	Clock Frequency		6.5		MHz

[1] For uplink-path, not all gain setting of VUPG meets the specification listed on table, especially for the several lowest gains. The minimum gain that meets the specification is to be determined.

[2] For downlink-path, not all gain setting of VDPG meets the specification listed on table, especially for the several lowest gains. The minimum gain that meets the specification is to be determined.

MediaTek Confidential Release for Cenon WCX

This document contains information that is proprietary to MediaTek Inc.

Unauthorized reproduction or disclosure of this information in whole or in part is strictly prohibited.

Fs	Sampling Rate	32	44.1	48	KHz
AVDD	Power Supply	2.52	2.8	3.08	V
T	Operating Temperature	-20		85	℃
IDC	Current Consumption		5		mA
PSNR	Peak Signal to Noise Ratio		80		dB
DR	Dynamic Range		80		dB
VOUT	Output Swing for 0dBFS Input Level		0.7		Vrms
THD	Total Harmonic Distortion 22mW at 32 Ω Load			-60	dB
RLOAD	Output Resistor Load (Single-Ended)	32			Ω
CLOAD	Output Capacitor Load			200	pF
XT	L-R Channel Cross Talk Suppression	70			dB

Table 68 Functional specifications of the analog audio blocks

6.1.5 Clock Squarer

6.1.5.1 Block Descriptions

In MT6252MT6252, RF is integrated and 26MHz is provided internally. Therefore, there is no dedicated input pin for 26MHz clock. For DCXO in RF, the output clock waveform is sinusoidal with small amplitude (about several hundred mV). To make MT6252MT6252 digital circuits function well, clock squarer is designed to convert such a small signal to a rail-to-rail clock signal with excellent duty-cycle.

6.1.5.2 Function Specifications

The functional specification of clock squarer is shown in **Table 69**.

Symbol	Parameter	Min	Typical	Max	Unit
Fin	Input Clock Frequency		26		MHz
Fout	Output Clock Frequency		26		MHz
Iin	Input Signal Amplitude		75		uA

MediaTek Confidential Release for Cenon WCX
MediaTek Confidential Release for Cenon WCX

This document contains information that is proprietary to MediaTek Inc.

Unauthorized reproduction or disclosure of this information in whole or in part is strictly prohibited.

DcycIN	Input Signal Duty Cycle		50		%
DcycOUT	Output Signal Duty Cycle	DcycIN-5		DcycIN+5	%
TR	Rise Time on Pin CLKSQOUT			5	ns/pF
TF	Fall Time on Pin CLKSQOUT			5	ns/pF
DVDD	Digital Power Supply	1.08	1.2	1.32	V
AVDD	Analog Power Supply	2.52	2.8	3.08	V
T	Operating Temperature	-20		85	℃
	Current Consumption		150		uA

Table 69 The Functional Specification of Clock Squarer

6.1.6 Phase Locked Loop

6.1.6.1 Block Descriptions

MT6252MT6252/E includes three PLLs: MCU PLL, SFC PLL, USB PLL. MCU PLL and SFC PLL are to provide 104MHz and 78MHz output clock while accepts 26MHz signal. USB PLL is designed to also accept 26MHz input clock signal and provides 48MHz, 78MHz, and 104MHz output clocks.

6.1.6.2 Function Specifications

The functional specification of MCU PLL is shown in the following table.

Symbol	Parameter	Min	Typical	Max	Unit
Fin	Input Clock Frequency		26		MHz
Fout	Output Clock Frequency	98		104	MHz
	Min. output frequency step		0.5		MHz
	Output Clock Cycle-to-Cycle Jitter (p-p)			200	ps
	Output Clock Duty Cycle	45	50	55	%
	Settling Time for power on For band switching		160 80	200 100	us
DVDD	Digital Power Supply	1.08	1.2	1.32	V
AVDD	Analog Power Supply	2.52	2.8	3.08	V
T	Operating Temperature	-20		85	℃

MediaTek Confidential Release for Cenon WCX

This document contains information that is proprietary to MediaTek Inc.

Unauthorized reproduction or disclosure of this information in whole or in part is strictly prohibited.

	Current Consumption For AVDD For DVDD		0.8 0.2		mA
	Power Down Current Consumption For AVDD For DVDD			1 2.5	uA

Table 70 The Functional Specification of DSP/MCU PLL

The functional specification of SFC PLL is shown in the following table.

Symbol	Parameter	Min	Typical	Max	Unit
Fin	Input Clock Frequency		26		MHz
Fout	Output Clock Frequency	72		78	MHz
	Min. output frequency step		0.5		MHz
	Output Clock Cycle-to-Cycle Jitter (p-p)			200	ps
	Output Clock Duty Cycle	45	50	55	%
	Settling Time for power on For band switching		160 80	200 100	us
DVDD	Digital Power Supply	1.08	1.2	1.32	V
AVDD	Analog Power Supply	2.52	2.8	3.08	V
T	Operating Temperature	-20		85	℃
	Current Consumption For AVDD For DVDD		0.8 0.2		mA
	Power Down Current Consumption For AVDD For DVDD			1 2.5	uA

Table 8 The Functional Specification of SFC PLL

The functional specification of USB PLL is shown below.

MediaTek Confidential Release for Cenon WCX

This document contains information that is proprietary to MediaTek Inc.

Unauthorized reproduction or disclosure of this information in whole or in part is strictly prohibited.

Symbol	Parameter	Min	Typical	Max	Unit
Fin	Input Clock Frequency		26		MHz
Fout	Output Clock Frequency		48/78/104		MHz
	Output Clock Cycle-to-Cycle Jitter (p-p)			200	ps
	Output Clock Duty Cycle(78/104MHz)	45	50	55	%
	Settling Time		10	20	us
DVDD	Digital Power Supply	1.08	1.2	1.32	V
AVDD	Analog Power Supply	2.52	2.8	3.08	V
T	Operating Temperature	-20		85	℃
	Current Consumption For AVDD For DVDD		 1.2 0.25		mA
	Power Down Current Consumption For AVDD For DVDD			 1 2.5	uA

Table 9 The Functional Specification of USB PLL

6.1.7 32-KHz Crystal Oscillator

6.1.7.1 Block Descriptions

The low-power 32-KHz crystal oscillator XOSC32 is designed to work with an external piezoelectric 32.768KHz crystal and a load composed of two functional capacitors, as shown in the following figure.

MediaTek Confidential Release for Cenon WCX

This document contains information that is proprietary to MediaTek Inc.

Unauthorized reproduction or disclosure of this information in whole or in part is strictly prohibited.

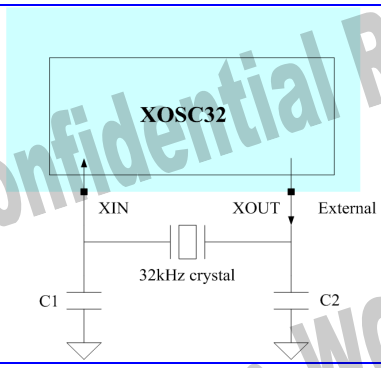

Figure 57 Block diagram of XOSC32

6.1.7.2 Functional specifications

The functional specification of XOSC32 is shown in the following table.

Symbol	Parameter	Min	Typical	Max	Unit
AVDDRTC	Analog power supply	1	2.8	3.0	V
Tosc	Start-up time			1	sec
Dcyc	Duty cycle	20	50	80	%
TR	Rise time on XOSCOUT		TBD		ns/pF
TF	Fall time on XOSCOUT		TBD		ns/pF
	Current consumption			5	µA
	Leakage current		1		µA
T	Operating temperature	-20		85	℃

Table 71 Functional Specification of XOSC32

Here below are a few recommendations for the crystal parameters for use with XOSC32.

Symbol	Parameter	Min	Typical	Max	Unit
F	Frequency range		32768		Hz
GL	Drive level			5	uW
Δf/f	Frequency tolerance		+/- 20		ppm
ESR	Series resistance			50	KΩ

MediaTek Confidential Release for Cenon WCX

This document contains information that is proprietary to MediaTek Inc.

Unauthorized reproduction or disclosure of this information in whole or in part is strictly prohibited.

C0	Static capacitance			1.6	pF
CL[3]	Load capacitance	6		12.5	pF

Table 72 Recommended Parameters of the 32KHz crystal

6.2 ABB Register Definitions

ADDRESS	TITLE	DESCRIPTION
8301_000C	WR_PATH	Switch configuration path control register
8301_0100	ACIF_VOICE_CON0	VOICE control register 0
8301_0104	ACIF_VOICE_CON1	VOICE control register 1
8301_0108	ACIF_VOICE_CON2	VOICE control register 2
8301_010C	ACIF_VOICE_CON3	VOICE control register 3
8301_010C	ACIF_VOICE_CON3	VOICE control register 3
8301_0110	ACIF_VOICE_CON4	VOICE control register 4
8301_0200	ACIF_AUDIO_CON0	AUDIO control register 0
8301_0204	ACIF_AUDIO_CON1	AUDIO control register 1
8301_0208	ACIF_AUDIO_CON2	AUDIO control register 2
8301_0300	ACIF_BBRX_CON	BBRX control register
8301_0600	ACIF_APC_CON0	APC control register 0
8301_0604	ACIF_APC_CON1	APC control register 1
8301_0700	ACIF_AUX_CON0	AUX control register 0
8301_0704	ACIF_AUX_CON1	AUX control register 1

[3] CL is the parallel combination of C1 and C2 in the block diagram. It should be adjusted according to PCB design to get a preferred frequency accuracy.

MediaTek Confidential Release for Cenon WCX

This document contains information that is proprietary to MediaTek Inc.

Unauthorized reproduction or disclosure of this information in whole or in part is strictly prohibited.

6.2.1 Register setting path

8301000Ch **WR_PATH** **WR_PATH**

Bit	15	14	13	12	11	10	9	8	7	6	5	4	3	2	1	0
Name	CCI_VSDM_PWDB	CCI_ASDM_PWDB	CCI_ESDM_PWDB	CCI_SIMLS_PWDB	CCI_APC_PWDB	CCI_AUX_PWDB		ABB_PRST_MODE	PMU_PRST_MODE	SIM_PRST_MODE	CCI_VTX2AU_SEL	CCI_ACD_MODE	PMIC_WR_PATH	MODEM_WR_PATH	VBI_WR_PATH	ABI_WR_PATH
Type	RW	RW	RW	RW	RW	RW		RW	RW	RW	RW	RW	RW	RW	RW	RW
Reset	1	1	1	1	1	1		0	1	0	0	0	0	0	0	0

WR_PATH { PMIC_WR_PATH, MODEM_WR_PATH, VBI_WR_PATH, ABI_WR_PATH } The bit is to facilitate ACD members for verifying purpose; the hardware supports write path switching, without being disturbed by existing MCU load. However, when with manually control, all registers addresses are offset by 0x1000. For example, MCU configures **ACIF_AUDIO_CON0** through the address 0x8301_0200, while the manually control path take effect when configuring 0x8301_1200. Notice that before finishing manual control, the register must be reset to be 0. The modem part includes BBRX, BBTX, APC and AUX.

0 switch the register setting to MCU side.

1 switch the register setting to manually control by TRACE32 through JTAG.

ACD_MODE The register bit decides the input/output path of the mixed-mode module. For ABI and VBI, it can be configured to feed the pattern from AFE or from GPIO (shared with A_FUNC_MODE). For APC and AUX, the input selection interface is divided at either MIXED_DIG or GPIO (also shared with A_FUNC_MODE). As for the BBRX, the output pattern can be bypass to GPIO with this register bit being true. The bit is for convenient debug-usage in normal mode, such that the data pattern can be observed or be feed-in by external device, while control register setting still comes from the chip internally(By use of JTAG). It should be notice that this special debug mode should be accompanied by proper setting of GPIO, which decides the PAD OE when in normal function.

0 data pattern comes from chip internally, and the output data cannot be bypassed to GPIO.

1 analog debug mode in normal function.

VTX2AU_SEL The register bit select the input source to AUDIO DAC.

0 normal path

1 loop-back path (select VOICE TX-ADC data)

ABIST_MODE The register bit control the GPIO as mixedsys monitor pins, shared with ABIST_MODE.

0 disbale

1 enable

MediaTek Confidential Release for Cenon WCX

This document contains information that is proprietary to MediaTek Inc.

Unauthorized reproduction or disclosure of this information in whole or in part is strictly prohibited.

AUX_PWDB The register bit control the power-down of AUX at A_FUNC_MODE or ACD_MODE=1

- **0** power-down
- **1** power-up

APC_PWDB The register bit control the power-down of APC at A_FUNC_MODE or ACD_MODE=1

- **0** power-down
- **1** power-up

ESDM_PWDB The register bit control the power-down of BBRX at A_FUNC_MODE or ACD_MODE=1

- **0** power-down
- **1** power-up

ASDM_PWDB The register bit control the power-down of ASDM at A_FUNC_MODE or ACD_MODE=1

- **0** power-down
- **1** power-up

VSDM_PWDB The register bit control the power-down of VSDM at A_FUNC_MODE or ACD_MODE=1

- **0** power-down
- **1** power-up

NAME	A_FUNC_TEST	NAME	A_FUNC_TEST	NAME	A_FUNC_TEST
PWM	A_FUNC_ABB_RESETB	EA14	CCI_PMU_SDO	EA4	CCI_SIM_SDO
KCOL4	A_FUNC_ABB_DIN[9]	LPTE	CCI_PMU_SCLK	EA3	CCI_SIM_SCLK
KCOL3	A_FUNC_ABB_DIN[8]	SCK(L)/KROW6(E)	CCI_PMU_SFSI	EA2	CCI_SIM_SFSI
KCOL2	A_FUNC_ABB_DIN[7]	EINT1	CCI_PMU_SDI	EA1	CCI_SIM_SDI
KCOL1	A_FUNC_ABB_DIN[6]	ED4	A_FUNC_PMU_RESETB	EA0	A_FUNC_SIM_RESETB
KCOL0	A_FUNC_ABB_DIN[5]	EA15	A_FUNC_PMU_CK	ED3(E)/SWP(L)	A_FUNC_SIM_DOUT[1]
KROW4	A_FUNC_ABB_DIN[4]	EA13	A_FUNC_PMU_DIN	ED2(E)/SHOLD(L)	A_FUNC_SIM_DOUT[0]
KROW3	A_FUNC_ABB_DIN[3]	EA12	A_FUNC_PMU_DOUT[7]	BPI_BUS4	A_FUNC_SIM_DIN[6]
KROW2	A_FUNC_ABB_DIN[2]	EA11	A_FUNC_PMU_DOUT[6]	BPI_BUS3	A_FUNC_SIM_DIN[5]
KROW1	A_FUNC_ABB_DIN[1]	EA10	A_FUNC_PMU_DOUT[5]	BPI_BUS2	A_FUNC_SIM_DIN[4]
KROW0	A_FUNC_ABB_DIN[0]	EA9	A_FUNC_PMU_DOUT[4]	BPI_BUS1	A_FUNC_SIM_DIN[3]
DAICLK	A_FUNC_ABB_CK	EA8	A_FUNC_PMU_DOUT[3]	BPI_BUS0	A_FUNC_SIM_DIN[2]
DAIPCMOUT	CCI_ABB_SDO	EA7	A_FUNC_PMU_DOUT[2]	ED7	A_FUNC_SIM_DIN[1]
DAIPCMIN	CCI_ABB_SCLK	EA6	A_FUNC_PMU_DOUT[1]	ED6	A_FUNC_SIM_DIN[0]
DAIRST	CCI_ABB_SDI	EA5	A_FUNC_PMU_DOUT[0]	LRSTB	EXT_BBWAKEUP

MediaTek Confidential Release for Cenon WCX

This document contains information that is proprietary to MediaTek Inc.

Unauthorized reproduction or disclosure of this information in whole or in part is strictly prohibited.

DAISYNC	CCI_ABB_SFSI				
MCINS	A_FUNC_ABB_DOUT[3]				
MCCK	A_FUNC_ABB_DOUT[2]				
MCDA0	A_FUNC_ABB_DOUT[1]				
MCCM0	A_FUNC_ABB_DOUT[0]				
KCOL6	A_FUNC_ABB_DOUT[7]				
KCOL5	A_FUNC_ABB_DOUT[6]				
KROW5	A_FUNC_ABB_DOUT[5]				
SRCLKENAI	A_FUNC_ABB_DOUT[4]				

6.2.2 BBRX

MCU APB bus registers for BBRX ADC are listed as followings.

83010300h ACIF_BBRX_CON **ACIF_BBRX_CON**

Bit	15	14	13	12	11	10	9	8	7	6	5	4	3	2	1	0
Name				RG_EDGERFRX_DITHERDIS	RG_EDGERFRX_QSEL		RG_EDGERFRX_ISEL			RG_EDGERFRX_GAIN			RG_EDGERFRX_CALI			
Type				RW	RW		RW			RW			RW			
Reset				0	0		0			0			0			

Set this register for BBRX analog circuit configuration controls.

RG_EDGERFRX_CALI[3:0]

The register field is for control of biasing current in BBRX mixed-signal module. Biasing current in BBRX mixed-signal module has impact on the performance of A/D conversion. The larger the value of the register field, the larger the biasing current in BBRX mixed-signal module, and the larger the SNR.

0100 8/4x
0011 7/4x
0010 6/4x
0001 5/4x
x000 4/4x
1001 4/5x
1010 4/6x

MediaTek Confidential Release for Cenon WCX

This document contains information that is proprietary to MediaTek Inc.

Unauthorized reproduction or disclosure of this information in whole or in part is strictly prohibited.

1011 4/7x
1100 4/8x

RG_EDGERFRX_GAIN[1:0]

The register bits are for configuration of gain control of analog inputs in BBRX mixed-signal module.

00 Input range is 0.80X AVDD for analog inputs in GSM RX mixed-signal module.
01 Input range is 0.40X AVDD for analog inputs in GSM RX mixed-signal module.
10 Input range is 0.57X AVDD for analog inputs in GSM RX mixed-signal module.
11 Input range is 0.33X AVDD for analog inputs in GSM RX mixed-signal module.

RG_EDGERFRX_ISEL[1:0]

Input signal selection for I-channel in BBRX mixed-signal module.

00 Select QS_BDLAIP / QS_BDLAIN to ICH ADC
01 Select QS_BDLAIP / QS_BDLAIN to ICH ADC
10 Select QS_BDLAQP / QS_BDLAQN to ICH ADC
11 Select VCM to ICH ADC for self-test

RG_EDGERFRX_QSEL[1:0]

Input signal selection for Q-channel in BBRX mixed-signal module.

00 Select QS_BDLAQP / QS_BDLAQN to QCH ADC
01 Select QS_BDLAQP / QS_BDLAQN to QCH ADC
10 Select QS_BDLAIP / QS_BDLAIN to QCH ADC
11 Select VCM to QCH ADC for self-test

RG_EDGERFRX_DITHERDIS

Dither feature disable control register, which can effectively reduce the THD (total harmonic distortion) of the BBRX ADC.

0 enable (default value)
1 disable

6.2.3 APC DAC

MCU APB bus registers for APC DAC are listed as followings.

83010600h **ACIF_APC_CON0** **ACIF_APC_CON0**

Bit	15	14	13	12	11	10	9	8	7	6	5	4	3	2	1	0
Name																RG_APC_TGSEL
Type																RW
Reset																0

MediaTek Confidential Release for Cenon WCX

This document contains information that is proprietary to MediaTek Inc.

Unauthorized reproduction or disclosure of this information in whole or in part is strictly prohibited.

Set this register for APC analog circuit configuration controls.

RG_APC_TGSEL APC_TG trigger edge select.

- **0** Trigger the signal at rising edge.
- **1** Trigger the signal at falling edge.

83010604h **ACIF_APC_CON1** **ACIF_APC_CON1**

Bit	15	14	13	12	11	10	9	8	7	6	5	4	3	2	1	0
Name	MIXEDSYS_APC_SETEN					MIXEDSYS_APC_SETTG	MIXEDSYS_APC_SETBUS									
Type	RW					RW	RW									
Reset	0					0	0									

Set this register for APC analog circuit manual controls.

MIXEDSYS_APC_SETEN manual APC set enable

MIXEDSYS_APC_SETTG manual APC set toggle

MIXEDSYS_APC_SETBUS manual APC 10bits input

6.2.4 Auxiliary ADC

MCU APB bus registers for AUX ADC are listed as followings.

83010700h **ACIF_AUX_CON0** **ACIF_AUX_CON0**

Bit	15	14	13	12	11	10	9	8	7	6	5	4	3	2	1	0
Name														RG_TESTMODE_PLL	RG_AUX_CALI	
Type														RW	RW	
Reset														0	01	

Set this register for AUX analog circuit configuration controls.

RG_AUX_CALI AUX ADC biasing current control

- **00** 0.5x
- **01** 1.0x
- **10** 1.5x
- **11** 2.0x

MediaTek Confidential Release for Cenon WCX

This document contains information that is proprietary to MediaTek Inc.

Unauthorized reproduction or disclosure of this information in whole or in part is strictly prohibited.

RG_TESTMODE_PLL pll testmode control

0: normal

1: AUX_IN4/AUX_IN5 channels can not be selected

6.2.5 Voice Front-end

MCU APB bus registers for speech are listed as followings.

83010100h ACIF_VOICE_CON0 ACIF_VOICE_CON0

Bit	15	14	13	12	11	10	9	8	7	6	5	4	3	2	1	0
Name	RGS_ZCD_STATE (R)		CCI_VUPG						RG_VDPG				RG_VBIRX_ZCD_HYS_EN	RG_VBIRX_ZCD_EN	RG_VBIRX_ZCD_CALI	
Type	R		RW						RW				RW	RW	RW	
Reset	0		0						0				0	0	0	

Set this register for VOICE PGA gains analog circuit. CCI_VUPG is set for microphone input volume control. And RG_VDPG is set for output volume control.

RG_ZCD_STATE Indicates the ZCD current state,

0: ZCD is available for gain modification

1: ZCD is currently unavailable for gain modification

RG_VDPG Voice-band down-link PGA gain control bits.

VDPG [3:0]	Gain	VDPG [3:0]	Gain	VDPG [3:0]	Gain	VDPG [3:0]	Gain
1111	8dB	1011	0dB	0111	-8dB	0011	-16dB
1110	6dB	1010	-2dB	0110	-10dB	0010	N/A
1101	4dB	1001	-4dB	0101	-12dB	0001	N/A
1100	2dB	1000	-6dB	0100	-14dB	0000	N/A

CCI_VUPG Voice-band up-link PGA gain control bits. For VCFG[3] = 1, it is only valid for INPUT 1.VIN0/VIN1 input path

MediaTek Confidential Release for Cenon WCX

This document contains information that is proprietary to MediaTek Inc.

Unauthorized reproduction or disclosure of this information in whole or in part is strictly prohibited.

VUPG [5:0]	Gain	VUPG [5:0]	Gain	VUPG [5:0]	Gain	VUPG [5:0]	Gain
111111	49 dB	101111	33 dB	011111	17 dB	001111	1 dB
111110	48 dB	101110	32 dB	011110	16 dB	001110	N/A-
111101	47 dB	101101	31 dB	011101	15 dB	001101	N/A-
111100	46 dB	101100	30 dB	011100	14 dB	001100	N/A-
111011	45 dB	101011	29 dB	011011	13 dB	001011	N/A-
111010	44 dB	101010	28 dB	011010	12 dB	001010	N/A-
111001	43 dB	101001	27 dB	011001	11 dB	001001	N/A-
111000	42 dB	101000	26 dB	011000	10 dB	001000	N/A-
110111	41 dB	100111	25 dB	010111	9 dB	000111	N/A-
110110	40 dB	100110	24 dB	010110	8 dB	000110	N/A-
110101	39 dB	100101	23 dB	010101	7 dB	000101	N/A-
110100	38 dB	100100	22 dB	010100	6 dB	000100	N/A-
110011	37 dB	100011	21 dB	010011	5 dB	000011	N/A-
110010	36 dB	100010	20 dB	010010	4 dB	000010	N/A-
110001	35 dB	100001	19 dB	010001	3 dB	000001	N/A-
110000	34 dB	100000	18 dB	010000	2 dB	000000	N/A-
FM input path							
VUPG [5:0]	Gain	VUPG [5:0]	Gain	VUPG [5:0]	Gain	VUPG [5:0]	Gain
111111	22 dB	101111	6 dB	011111	-10 dB	001111	-26 dB
111110	21 dB	101110	5 dB	011110	-11 dB	001110	N/A-
111101	20 dB	101101	4 dB	011101	-12 dB	001101	N/A-
111100	19 dB	101100	3 dB	011100	-13 dB	001100	N/A-
111011	18 dB	101011	2 dB	011011	-14 dB	001011	N/A-

MediaTek Confidential Release for Cenon WCX

This document contains information that is proprietary to MediaTek Inc.

Unauthorized reproduction or disclosure of this information in whole or in part is strictly prohibited.

111010	17 dB	101010	1 dB	011010	-15 dB	001010	N/A-
111001	16 dB	101001	0 dB	011001	-16 dB	001001	N/A-
111000	15 dB	101000	-1 dB	011000	-17 dB	001000	N/A-
110111	14 dB	100111	-2 dB	010111	-18 dB	000111	N/A-
110110	13 dB	100110	-3 dB	010110	-19 dB	000110	N/A-
110101	12 dB	100101	-4 dB	010101	-20 dB	000101	N/A-
110100	11 dB	100100	-5 dB	010100	-21 dB	000100	N/A-
110011	10 dB	100011	-6 dB	010011	-22 dB	000011	N/A-
110010	9 dB	100010	-7 dB	010010	-23 dB	000010	N/A-
110001	8 dB	100001	-8 dB	010001	-24 dB	000001	N/A-
110000	7 dB	100000	-9 dB	010000	-25 dB	000000	N/A-

RG_VBIRX_ZCD_HYS_EN Voice buffer zero-detection hysteresis enable

0 : Disable
1 : Enable

RG_VBIRX_ZCD_EN Enable VBIRX Zero Detection Function

0 : Disable
1 : Enable

RG_VBIRX_ZCD_CALI Trim the hysterisis of ZDTC

00 : 13mV
01 : 26mV
10 : 40mV
11 : 56mV

83010104h **ACIF_VOICE_CON1** **ACIF_VOICE_CON1**

Bit	15	14	13	12	11	10	9	8	7	6	5	4	3	2	1	0
Name			RG_VMIC_VREF		RG_LOWGAIN_EN	RG_VCFG						RG_GLB_CALI		RG_VCALI		
Type			RW		RW	RW						RW		RW		

This document contains information that is proprietary to MediaTek Inc.

Unauthorized reproduction or disclosure of this information in whole or in part is strictly prohibited.

MediaTek Confidential Release for Cenon WCX

Reset			0	0	0			0	0

Set this register for VOICE analog circuit configuration controls.

RG_VMIC_VREF Tuning the dc level of micbias

00: 1.9V 01: 2.0V 10: 2.1V 11: 2.2V

RG_LOWGAIN_EN lower PGA gain 6dB

0: normal

1: enable additional -6dB (based on VUPG gain setting)

RG_VCFG Set PGA's input selection, AC/DC coupled and GAIN/ATT mode

VCFG [3:0]	Configuration
0000	Select AU_VIN0 as input (Normal mode)
0001	Select AU_VIN1 as input (Normal mode)
001X	Select AU_FMR/L as input (Normal mode)
1001	PGA bypass mode and ADC is AC couple, Input channel is select as AU_VIN1 (Test mode)
1101	PGA bypass mode and ADC is DC couple, Input channel is select as AU_VIN1 (Test mode)

RG_GLB_CALI Set global bias current ratio

00: 1X
01: 1.2X
10: 0.67X
11: 0.8X

RG_VCALI Set VBI bias current ratio

000: X1 (represents nominal 1.75uA current bias)
001: X4/5
010: X4/6
011: X4/7
100: X5/4
101: X6/4
110: X7/4
111: X8/4

MediaTek Confidential Release for Cenon WCX

This document contains information that is proprietary to MediaTek Inc.

Unauthorized reproduction or disclosure of this information in whole or in part is strictly prohibited.

83010108h ACIF_VOICE_CON2 **ACIF_VOICE_CON2**

Bit	15	14	13	12	11	10	9	8	7	6	5	4	3	2	1	0
Name		RG_VBUF_BIAS							RG_VBUF_FLOAT			RG_VADC_DVREF_CAL	RG_VADC_DENB		RG_VADCINMODE	
Type		RW							RW			RW	RW		RW	
Reset		0							0			0	0		0	

RG_VBUF_BIAS Voice BUF bias control

00: 3X
01: 4X
10: 1X
11: 2X

RG_VBUF_FLOAT VBI_DACBUF Output floating during power down

0: Output shorted during power down

1: Output floating during power down

RG_VADC_DVREF_CAL ADC Dither Reference Voltage Calibration

0: 2/15*AVDD
1: 3/15*AVDD

RG_VADC_DENB ADC Dither Enable

0: Enable
1: Disable

RG_VADCINMODE ADC input source selection

0 : from LNA

1: from DAC (internal test path)

8301010Ch ACIF_VOICE_CON3 **ACIF_VOICE_CON3**

Bit	15	14	13	12	11	10	9	8	7	6	5	4	3	2	1	0
Name	RG_VDEOP								RG_VREF24_EN		RG_VBIAS_PWDB	RG_VLNA_PWDB	RG_VADC_PWDB			RG_VBUF_PWDB
Type	RW								RW		RW	RW	RW			RW
Reset	0								0		0	0	0			0

MediaTek Confidential Release for Cenon WCX

This document contains information that is proprietary to MediaTek Inc.

Unauthorized reproduction or disclosure of this information in whole or in part is strictly prohibited.

MediaTek Confidential Release for Cenon WCX

RG_VDEPOP Anti-pop for buffer output enable

0:Disable
1:Enable

RG_VREF24_EN Enable 2.4V reference buffer

0: Disable
1: Enable

RG_VBIAS_PWDB Power-down bias

0: Power down
1: Active

RG_VLNA_PWDB Power down PGA and AGC

0: Power down
1: Active

RG_VADC_PWDB power down ADMOD

0: Power down
1: Active

RG_VBUF_PWDB Voice BUF Power down

0:Power down
1:Active

83010110h **ACIF_VOICE_CON4** **ACIF_VOICE_CON4**

Bit	15	14	13	12	11	10	9	8	7	6	5	4	3	2	1	0
Name										RG_VREF24_CON		RG_VCM14_PWD	RG_RESV			
Type										RW		RW	RW			
Reset										1		0	1100			

RG_VREF24_CON Reference Voltage Control (Necessary)

00 : 2.40V
01 : 2.27V
10 : 2.15V
11 : 2.03V

RG_VCM14_PWD Enable 1.4V common mode voltage (Necessary)

0: Enable
1: Disable

This document contains information that is proprietary to MediaTek Inc.

Unauthorized reproduction or disclosure of this information in whole or in part is strictly prohibited.

RG_RESV Reserved

6.2.6 Audio Front-end

MCU APB bus registers for audio are listed as followings.

83010200h ACIF_AUDIO_CON0 ACIF_AUDIO_CON0

Bit	15	14	13	12	11	10	9	8	7	6	5	4	3	2	1	0
Name	RG_DACREF					RG_ASDM_CK_INV	RG_AMUTER	RG_AMUTEL	RG_APGR				RG_APGL			
Type	RW					RW	RW	RW	RW				RW			
Reset	0					0	0	0	111				111			

RG_DACREF Select DAC reference as
0: VDD/GND (typically 2.8V)
1: REFP/REFN (Level is set by RG_VREF24_CON)

RG_ASDM_CK_INV Select ASDM clock inverse. 0: default phase; 1: inverse phase

RG_AMUTER Mute right channel

0: Normal

1: Mute

RG_AMUTEL Mute left channel

0: Normal

1: Mute

RG_APGR Audio right channel amplifier gain control

RG_APGL Audio left channel amplifier gain control

APGR/L [3:0]	Gain	APGR/L [3:0]	Gain	APGR/L [3:0]	Gain	APGR/L [3:0]	Gain
1111	N/A	1011	13dB	0111	-1dB	0011	-13dB
1110	N/A	1010	8dB	0110	-4dB	0010	-16dB
1101	17dB	1001	5dB	0101	-7dB	0001	-19dB

MediaTek Confidential Release for Cenon WCX

This document contains information that is proprietary to MediaTek Inc.

Unauthorized reproduction or disclosure of this information in whole or in part is strictly prohibited.

1100	14dB	1000	2dB	0100	-10dB	0000	-22dB

83010204h **ACIF_AUDIO_CON1** **ACIF_AUDIO_CON1**

Bit	15	14	13	12	11	10	9	8	7	6	5	4	3	2	1	0
Name				RG_ADEPOP		RG_ABUFSELR			RG_ABUFSELL			RG_ACALI				
Type				RW		RW			RW			RW				
Reset				1		0			0			0				

Set this register for AUDIO analog circuit configuration controls.

ACALI Audio bias current control, in 2's complement format.

- **00000** X1
- **00001** X5/4
- **00010** X6/4
- **00011** X7/4
- **00111** X8/4
- **10000** X1
- **10001** X4/5
- **10010** X4/6
- **10011** X4/7
- **10111** X4/8
- **OTHERS** Prohibited
- **BIT3** Reserved

ABUFSELL Audio buffer L-channel input selection.

- **00X** audio DAC L-channel output
- **100** external FM R/L-channel radio output, stereo to mono
- **101** external FM L-channel radio output
- **others** reserved

ABUFSELR Audio buffer R-channel input selection.

- **00X** audio DAC R-channel output
- **100** external FM R/L-channel radio output, stereo to mono
- **101** external FM R-channel radio output
- **others** reserved

ADEPOP Audio de-pop noise control bit

- **0** disable
- **1** enable

MediaTek Confidential Release for Cenon WCX

This document contains information that is proprietary to MediaTek Inc.

Unauthorized reproduction or disclosure of this information in whole or in part is strictly prohibited.

83010208h **ACIF_AUDIO_CON2** **ACIF_AUDIO_CON2**

Bit	15	14	13	12	11	10	9	8	7	6	5	4	3	2	1	0
Name				RG_ADACCK_EN	RG_ABUFHALFV_EN	RG_ADEPOPX_EN						RG_ABIAS_PWDB	RG_ADACR_PWDB	RG_ADACL_PWDB	RG_AOUTR_PWDB	RG_AOUTL_PWDB
Type				RW	RW	RW						RW	RW	RW	RW	RW
Reset				1	0	0						0	0	0	0	0

Set this register for AUDIO analog circuit configuration controls.

RG_ADACCK_EN Gating the DAC clock (Necessary)0: Clock gated
1: Clock pass

RG_ABUFHALFV_EN Enable HalfV 1.4V common mode voltage (Necessary)
0: Disable
1: Enable

RG_ADEPOPX_EN Power on depop removal circuit
0: Disable
1: Enable

AOUTL_PWDB Power-down AUDIO L-channel output buffer.
0 power-down
1 power-up
AOUTR_PWDB Power-down AUDIO R-channel output buffer.
0 power-down
1 power-up
ADACL_PWDB Power-down AUDIO L-channel DAC.
0 power-down
1 power-up
ADACR_PWDB Power-down AUDIO R-channel DAC.
0 power-down
1 power-up
ABIAS_PWDB Power-down AUDIO bias current circuit.
0 power-down
1 power-up

8301020Ch **ACIF_AUDIO_CON3** **ACIF_AUDIO_CON3**

Bit	15	14	13	12	11	10	9	8	7	6	5	4	3	2	1	0
Name						RG_ABUF	SPARE_A	RG_A	RG_ABU		SPARE_	RG_AMUX		RG_ADEPO		

MediaTek Confidential Release for Cenon WCX

This document contains information that is proprietary to MediaTek Inc.

Unauthorized reproduction or disclosure of this information in whole or in part is strictly prohibited.

						_INSHORT	UDIO_CON3_9_	HFMODE	F_BIAS	AUDIO_CON3_5_		PX	
Type						RW	RW	RW	RW	RW	RW	RW	
Reset						0	0	0	0	0	0	10	

Set this register for AUDIO analog circuit configuration controls.

AMUX Mux audio DAC output to FM R/L pins.
- **00** FM input
- **01** FM input
- **10** L-channel DAC Output
- **11** R-channel DAC Output

ABUF_BIAS Audio buffer quasi-current select bits.
- **00** 1.0x (default)
- **01** 1.33x
- **10** 0.33x
- **11** 0.67x

AHFMODE Audio hand-free mode enable bit.
- **0** normal mode
- **1** hand-free mode

ABUF_INSHORT Audio buffer input short enable (during voice mode)
- **0** disable
- **1** enable

RG_ADEPOPX Power on depop removal circuit resistor calibration
- 00: 8k
- 01: 4k
- 10: 2k
- 11: 1k

6.2.7 Power Management Control

Power management unit, so called PMU, is integrated into analog part. To facilitate software control and interface design, PMU control share the CCI interface along with other analog parts, such as BBRX, VBI and ABI.

6.2.7.1 Low Dropout Regulators (LDOs)

The PMU Integrates 13 LDOs that are optimized for their given functions by balancing quiescent current, dropout voltage, line/load regulation, ripple rejection, and output noise.

MediaTek Confidential Release for Cenon WCX

This document contains information that is proprietary to MediaTek Inc.

Unauthorized reproduction or disclosure of this information in whole or in part is strictly prohibited.

RF LDO (Vrf)

The RF LDO is a linear regulator that could source 150mA (max) with 2.8V output voltage. It supplies the RF circuitry of the handset. The LDO is optimized for high performance and adequate quiescent current.

Digital Core LDO (Vcore)

The digital core regulator is a linear regulator that could source 200mA (max) with 0.8V to 1.35V (25mv/step) output voltage. It supplies the power for baseband circuitry of the SoC. The LDO is optimized for very low quiescent current.

Digital IO LDO (Vio)

The digital IO LDO is a linear regulator that could source 200mA (max) with 2.8V output voltage. It supplies the power for baseband circuitry of the SoC. The LDO is optimized for very low quiescent current and turns on automatically together with Va LDOs.

Analog LDO (Va)

The analog LDO is a linear regulator that could source 100mA (max) with 2.8V output voltage. It supplies the analog sections of the SoC. The LDO is optimized for low frequency ripple rejection in order to reject the ripple coming from the burst at 217Hz of RF power amplifier.

TCXO LDO (Vtcxo)

The TCXO LDO is a linear regulator that could source 40mA (max) with 2.8V output voltage. It supplies the temperature compensated crystal oscillator, which needs ultra low noise supply with very good ripple rejection.

Single-Step RTC LDO (Vrtc)

The single-step RTC LDO is a linear regulator that can charge up a capacitor-type backup coin cell to 2.8V, and also supply the RTC module even at the absence of the main battery. The single-step LDO features the reverse current protection and is optimized for ultra low quiescent current while sustaining the RTC function as long as possible.

Memory LDO (Vm)

The memory LDO is a linear regulator that could source 150mA (max) with 1.8V or 2.9V output voltage selection based on the supply specification of memory chips. It supplies the memory circuitry in the handset. The LDO is optimized for very low quiescent current with wide output loading range.

MediaTek Confidential Release for Cenon WCX
MediaTek Confidential Release for Cenon WCX

This document contains information that is proprietary to MediaTek Inc.

Unauthorized reproduction or disclosure of this information in whole or in part is strictly prohibited.

MediaTek Confidential Release for Cenon WCX

SIM LDO (Vsim)

The SIM LDO is a linear regulator that could source 30mA (max) with 1.8V or 3.0V output voltage selection based on the supply specs of subscriber identity modules (SIM) card. It supplies the SIM card and SIM level shifter circuitry in the handset. The Vsim LDO is controlled independently by the register named RG_VSIM1_EN.

SIM2 LDO (Vsim2)

The SIM2 LDO is a linear regulator that could source 30mA (max) with 1.3V, 1.5V, 1.8V, 2.5V, 2.8V, 3.0V or 3.3V output voltage selection based on the supply specs of the 2nd subscriber identity modules (SIM) card. It supplies the 2nd SIM card and SIM level shifter circuitry in the handset. The Vsim2 LDO is controlled independently by the register named RG_VSIM2_EN.

USB LDO (Vusb)

The USB LDO is a linear regulator that could source 50mA (max) with 3.3V output dedicated for USB circuitry.

Camera Analog LDO (Vcama)

The Vcama LDO is a linear regulator that could source 150mA (max) with 1.5V, 1.8V, 2.5V or 2.8V output which is selected by the register named RG_VCAMA_VOSEL[1:0]. It supplies the analog power of the camera module. Vcama is controlled independently by the register named RG_VCAMA_EN.

Camera Digital LDO (Vcamd)

The Vcamd LDO is a linear regulator that could source 100mA (max) with 1.3V, 1.5V, 1.8V, 2.5V, 2.8V, 3.0V or 3.3V output which is selected by the register named RG_VCAMD_VOSEL[2:0]. It supplies the digital power of the camera module. Vcamd is controlled independently by the register named RG_VCAMD_EN.

VIBR LDO (Vibr)

The Vibr LDO is a linear regulator that could source 150mA (max) with 1.3V, 1.5V, 1.8V, 2.5V, 2.8V, 3.0V or 3.3V output voltage which is selected by the register named RG_VIBR _VOSEL[2:0]. It supplies the power of the vibrator module. Vibr is controlled independently by the register named RG_VIBR_EN.

6.2.7.2 SIM Card Interface

There are two SIM card interface modules to support two SIM cards simultaneously. The SIM card interface circuitry of PMU meets all ETSI and IMT-2000 SIM interface requirements. It provides level shifting needs for low voltage GSM controller to communicate with either 1.8V or 3V SIM cards. All SIM cards contain a clock input, a reset input, and a bi-directional data input/output. The clock and reset inputs to SIM cards are level shifted from the supply of digital

This document contains information that is proprietary to MediaTek Inc.

Unauthorized reproduction or disclosure of this information in whole or in part is strictly prohibited.

CORE (Vcore) of baseband to the SIM supply (Vsim). The bi-directional data bus is internal pull high to Vsim via 5KΩ resistor.

The 2nd SIM card interface can be used for supporting another SIM card or mobile TV. The interface pins such as SIO2, SRST2, SCLK2, can be configured as GPIO when there is no need to use the 2nd SIM card interface.

All pins that connect to the SIM card (Vsim, SRST, SCLK, SIO) withstand over 2kV HBM (human body mode) ESD. In order to ensure proper ESD protection, careful board layout is required.

6.2.7.3 Keypad LED/Current Sink Drivers

Built-in open-drain output switches drive the Keypad LED in the handset. This driver is controlled by baseband with enable registers (RG_KPLED_EN), and the output is high impedance when disabled. It can sink 60mA. Four current controlled open drain drivers (Isink0~3) are also implemented to drive LCM backlight module and each provides 6 current level step up to 24mA..

6.2.7.4 Speaker Amplifier

The speaker amplifier is a class AB audio amplifier which is a highly integrated design with built-in output stages. The audio amplifier can provide good linearity and low EMI, also help to reduce the component cost. It has programmable gain setting from 0dB to 22.5dB with 1.5dB per step. Current limit circuit is also implemented to detect over current and shut down automatically so as to prevent devastation.

6.2.7.5 Power-on Sequence and Protection Logic

The PMU handles the powering ON and OFF of the handset. There are three ways to power-on the handset system :

1. Push PWRKEY (Pull the PWRKEY pin to the low level)

Pulling PWRKEY low is the typical way to turn on the handset. The Vcore LDO will be turned-on first, and then Vm and followed by Va/Vio LDOs turn-on in turn. The supplies for the baseband are ready and then the system reset ends at the moment when the Vcore/Va/Vio/Vm are fully turned-on to ensure the correct timing and function. After that, baseband would send the PWRBB signal back to PMU for acknowledgement. To successfully power-on the handset, PWRKEY should be kept low until PMU receives the PWRBB from baseband.

2. RTC module generate PWRBB to wakeup the system

If the RTC module is scheduled to wakeup the handset at some time, the PWRBB signal will directly send to the PMU. In this case, PWRBB becomes high at the specific moment and let PMU power-on just like the sequence described above. This is the case named RTC alarm.

3. Valid charger plug-in (CHRIN voltage is within the valid range)

MediaTek Confidential Release for Cenon WCX

This document contains information that is proprietary to MediaTek Inc.

Unauthorized reproduction or disclosure of this information in whole or in part is strictly prohibited.

Charger plugging-in will also turn on the handset if the charger is valid (no OVP take place). However, if the battery voltage is too low to power-on the handset (UVLO state), the system won't be turned-on by any of these three ways. In this case, charger will charge the battery first and the handset will be powered-on automatically as long as the battery voltage is high enough.

Phone State	CHRON	UVLO	PWRKEY && (~PWRBB)	Vrtc	Vcore, Vio, Vm, Va	Vtcxo, Vrf
No Battery or Vbat < 2.5V	X	H	X	Off	Off	Off
2.5V < Vbat < 3.2V	L	H	X	On	Off	Off
Pre-Charging	H	H	X	On	Off	Off
Charger-on (Vbat>3.2V)	H	L	X	On	On	On
Switched off	L	L	H	On	Off	Off
Stand-by	L	L	L	On	On	Off
Active	L	L	L	On	On	On

Table 13 States of mobile handset and regulator

Under-voltage Lockout (UVLO)

The UVLO state in the PMU prevents startup if the initial voltage of the main battery is below the 3.2V threshold. It ensures that the handset is powered-on with the battery in good condition. The UVLO function is performed by a hysteretic comparator which can ensure the smooth power-on sequence. In addition, when the battery voltage is getting lower and lower, it will enter UVLO state and the PMU will be turned-off by itself, except for Vrtc LDO, to prevent further discharging. Once the PMU enters UVLO state, it draws low quiescent current. The RTC LDO is still working until the DDLO disables it.

Deep Discharge Lockout (DDLO)

PMU will enter to the deep discharge lockout (DDLO) state when the battery voltage drops below 2.5V. In this state, the Vrtc LDO will be shutdown. Otherwise, it draws very low quiescent current to prevent further discharging or even damage to the cells.

Reset

The PMU contains a reset control circuit which takes effect at both power-up and power-down. The **RESETB** pin is held at low in the beginning of power-up and returns to high after the pre-determined delay time. The delay time is controlled

MediaTek Confidential Release for Cenon WCX

This document contains information that is proprietary to MediaTek Inc.

Unauthorized reproduction or disclosure of this information in whole or in part is strictly prohibited.

by a large counter, which use clock from internal ring-oscillator. At power-off, **RESETB** pin will return to low immediately without any delay.

Over-temperature Protection

If the die temperature of PMU exceeds 150°C, the PMU will automatically disable all the LDOs except the Vrtc. Once the over-temperature state is resolved, a new power on sequence is required to enable the LDOs.

6.2.7.6 Battery Charger

The battery charger is optimized for the Li-ion batteries. The typical charging procedure can be divided into three phases: pre-charging mode, the constant current charging mode, and the full voltage charging mode. Figure 2 shows the flow chart of the charging procedure. Most of the charger circuits are integrated in the PMU except for one PNP, NMOS and one accurate resistor for current sensing. These components should be applied externally.

MediaTek Confidential Release for Cenon WCX

This document contains information that is proprietary to MediaTek Inc.

Unauthorized reproduction or disclosure of this information in whole or in part is strictly prohibited.

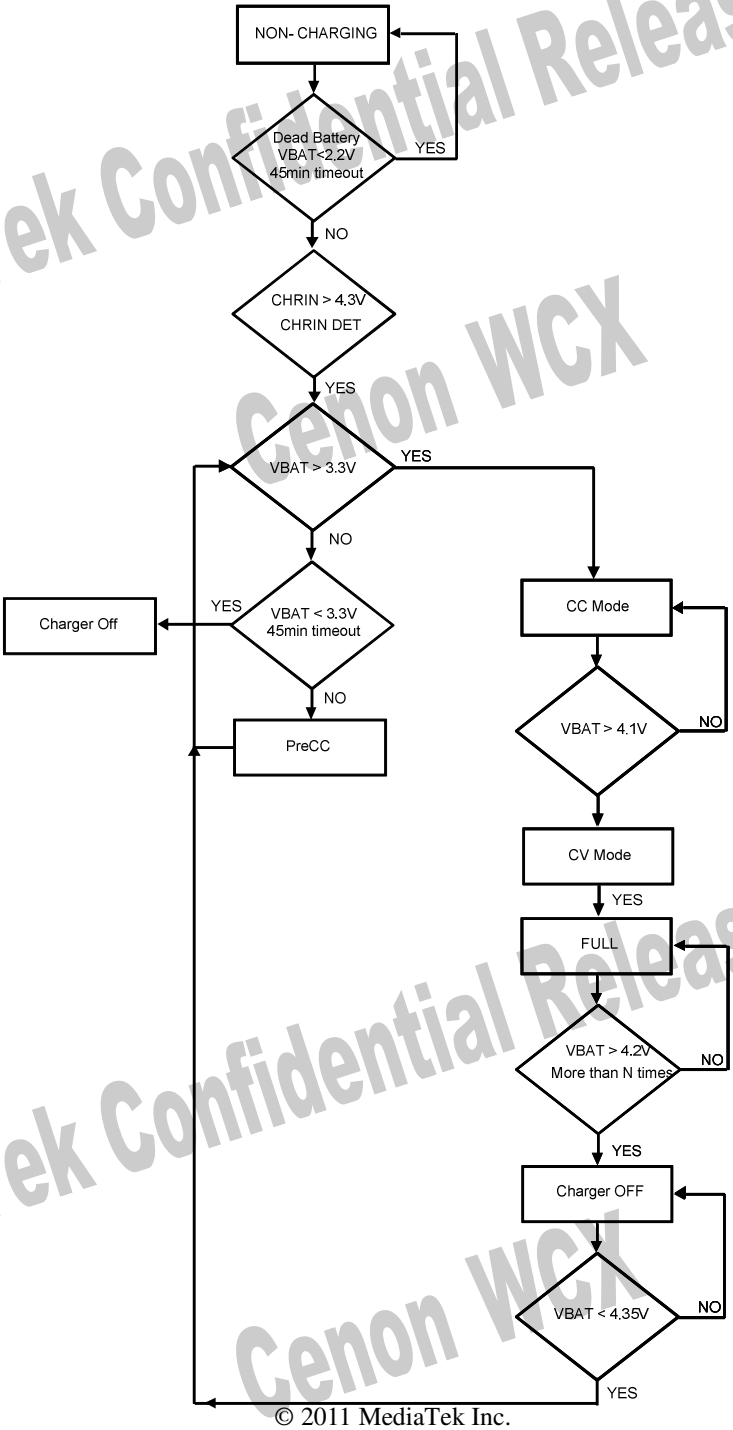

MediaTek Confidential Release for Cenon WCX
MediaTek Confidential Release for Cenon WCX

This document contains information that is proprietary to MediaTek Inc.

Unauthorized reproduction or disclosure of this information in whole or in part is strictly prohibited.

Figure 2. Battery Charger Flow Chart

1. Charge Detection

The PMU charger block has a detection circuit that senses the charger plug-in/out and provides the correct information to the baseband. If CHRIN is over 4.3V, charger detection will be report to baseband and charger circuit will be enabled. If the CHRIN voltage is over 7V, charger will send an invalid signal to baseband for further indication. The stop of charging when CHRIN is over 7V could be achieved by external component.

2. Pre-Charging mode

When the battery voltage is below the CC threshold, the charging status is in the pre-charging mode. There are two steps in this mode. While the battery voltage is deeply discharged below 2.7V, a 50mA trickle current is used for charging the battery. This is the pre-CC1 state. When the battery voltage exceeds 2.7V, the self-calibrated pre-charge mode is enabled, which allows 20mV (typically) voltage drop across the external current sense resistor. This is the pre-CC2 state. The pre-charge current in this state can be calculated as:

$$I_{PRE_CC} = \frac{V_{SENSE}}{R_{SENSE}} = \frac{20mV}{R_{SENSE}} \qquad (2)$$

Typically, I_{CONST}=100mA with V_{SENSE}=20mV and R_{SEN}=0.2Ω.

3. Constant Current Charging Mode

Once the battery voltage has exceeded the CC threshold, a constant current is used for periodical charging. With periodical charging, charger circuit could detect CHRIN state and battery state in non-charging period. This is called the constant current charging mode. An up-to-800mA constant charging current could be programmed via the register setting. The relation between the voltage drop across the external current sense resistor and the charging current is as follows,

$$I_{CONSTANT} = \frac{V_{SENSE}}{R_{SENSE}} \qquad (3)$$

Typically, I_{CONST}=800mA with V_{SENSE}=160mV and R_{SEN}=0.2Ω.

Before the battery voltage reaches 4.1V, the charger will be in the constant current charging mode.

4. Full/Constant Voltage Charging Mode

While the battery voltage reaches 4.1V, a constant current with much shorter period is used for charging. It could allow more often full battery detection in non charging period. This is called full voltage charging mode or constant voltage charging mode in correspondence to a linear charger. While the battery voltage reaches 4.2V more than the pre-setting times within the limited charging cycles, the end-of-charging process starts. It may prolong the charging and detecting

MediaTek Confidential Release for Cenon WCX

This document contains information that is proprietary to MediaTek Inc.

Unauthorized reproduction or disclosure of this information in whole or in part is strictly prohibited.

period for getting the optimized the full charging volume. This end of charging process is fully controlled by the baseband and could be easily optimized for different battery pack.

5. Over-Voltage Protection

Once the battery voltage exceeds 4.35V, a hardware over voltage protection (OV) should be activated and turn off the charger immediately.

6. Watchdog Timer

An internal watchdog timer is used as a protection for charging period control. In the constant current charging mode or the full voltage charging mode, the baseband must refresh the timer periodically to keep the charging alive. Once, the watchdog timer out, charger will stop charging. This provides the time domain protection for charging control.

7. CSDAC

CSDAC is an 8-bit current DAC for current sink. Typically, the step for 1 LSB current sink is 55µA. Hence, the controlled charging current could be calculated as $I_{CHR} = \beta \times 55\mu A \times CSDAC_DATA[7:0]$.

8. Current Sense

A current sense circuit measures the voltage difference between VSEN and VBAT, which could be used as a feedback signal for CSDAC driving control.

6.2.7.7 External Components Selection

Input Capacitor Selection

For each of input pins (VBAT) of PMU, a local bypass capacitor is recommended. Use a 10µF, low ESR capacitor. MLCC capacitors provide the best combination of low ESR and small size. Using a 10µF Tantalum capacitor with a small (1µF or 2.2µF) ceramic in parallel is an alternative low cost solution.

For charger input pin (CHRIN), a bypass 1µF ceramic capacitor is recommended.

LDO Capacitor Selection

The VCAMA, VRF, VIO LDOs require a 2.2µF capacitor, and the other LDOs require a 1µF capacitor. Large value capacitor may be used for desired noise or PSRR requirement. But the acceptable settling time should be taken into consideration. The MLCC X5R type capacitors must be used with VRF, VTCXO, VCAM_A and VA LDOs for good system performance. For other LDOs, MLCC X5R type capacitors are also recommended to use.

Setting the Charge Current

PMU is capable of charging battery. The charging current is controlled with an external sense resistor, *Rsense*. It is calculated as the Eq.(3). If the charge current is pre-defined, Rsense can be determined.

MediaTek Confidential Release for Cenon WCX

This document contains information that is proprietary to MediaTek Inc.

Unauthorized reproduction or disclosure of this information in whole or in part is strictly prohibited.

Accurate sense resistors are available from the following vendors: Vishay Dale, IRC, Panasonic.

Charger FET Selection

The PMOS FET selection used in charger should consider the minimum drain-source breakdown voltage (BVDS), the minimum turn-on threshold voltage (VGS), and heat-dissipating ability.

These specifications can be calculated as below:

$V_{GS} = V_{CHRIN} - V_{GATEDRV}$

$V_{DS} = V_{CHRIN} - V_{DIODE} - V_{SENSE} - VBAT$

$$R_{DS(ON)} = \frac{V_{DS}}{I_{CHR}}$$

$P_{DISS} = (V_{CHRIN}-V_{DIODE}-V_{SENSE}-VBAT) \times I_{CHR}$

Appropriate PMOS FETs are available from the following vendors: Siliconix, IR, Fairchild.

Charger Diode Selection

The diode is used to prevent the battery from discharging through the PMOS's body diode into the charger's internal circuits. Choose a diode with sufficient current rating to handle the battery charging current and voltage rating greater than Vbat.

Layout Guideline

Use the general guidelines listed below to design the printed circuit boards:

1. Split battery connection to the AVDD43_SPK, VBAT_ANALOG, VBAT_RF and VBAT_DIGITAL pins for PMU. Place the input capacitor as close to the power pins as possible.
2. Va and Vtcxo capacitors should be returned to AGND. Vrf capacitor should be returned to AGND_RF.
3. Split the ground connection. Use separate traces or planes for the analog, digital, and power grounds (i.e. AGND, pin of PMU, respectively) and tie them together at a single point, preferably close to battery return.
4. Place a separate trace from the BATSNS pin to the battery input to prevent voltage drop error when sensing the battery voltage.
5. Kelvin-connect the charge current sense resistor by placing separate traces to the BATSNS and ISENSE pins. Make sure that the traces are terminated as close to the resistor's body as possible.
6. Careful use of copper area, weight, and multi-layer construction will help to improve thermal performance.

MediaTek Confidential Release for Cenon WCX

This document contains information that is proprietary to MediaTek Inc.

Unauthorized reproduction or disclosure of this information in whole or in part is strictly prohibited.

6.2.7.8 Functional Specification

6.2.7.8.1 Electrical Characteristics

VBAT = 3 V ~ 4.3 V, minimum loads applied on all outputs, unless other noted. Typical values are at T_A = 25 °C.

Parameter	Conditions	Min.	Typical	Max.	Unit
Switch-Off Mode: Supply Current					
VBAT < 2.5 V	RTC LDO OFF		TBD		µA
2.5 V < VBAT < 3.3 V	VBAT=3.3V		TBD		µA
3.3 V < VBAT	VBAT=4.2V		TBD		µA
Operation: Supply Current					
All outputs on	VBAT=4.2V		TBD		µA
VSIM, VSIM2, VTXCO, VRF, VUSB, VCAM_A, VCAM_D, VBT off; all others on	VBAT=4.2V		TBD		µA
Under Voltage (UV)					
Under voltage falling threshold 1	UV_SEL[1:0] = 00	2.85	2.9	2.95	V
Under voltage falling threshold 2	UV_SEL[1:0] = 01	2.7	2.75	2.8	V
Under voltage falling threshold 3	UV_SEL[1:0] = 10	2.55	2.6	2.65	V
Under voltage falling threshold 4	UV_SEL[1:0] = 11	2.35	2.5	2.65	V
Under voltage rising threshold	UV_SEL[1:0] = xx	3.1	3.2	3.3	V
Reset Generator					
Output High		V_{IO}-0.5			V
Output Low				0.2	V
Output Current			TBD		mA
Power Key Input/VMSEL Input					
High Voltage		0.7*VBAT			V
Low Voltage				0.3*VBAT	V
Thermal Shutdown					
Threshold			150		degree

MediaTek Confidential Release for Cenon WCX

This document contains information that is proprietary to MediaTek Inc.

Unauthorized reproduction or disclosure of this information in whole or in part is strictly prohibited.

Hysteresis			40		degree
LDO Enable Response Time			250		µs

6.2.7.8.2 Regulator Output

Parameter	Conditions	Min.	Typical	Max.	Unit
Digital Core Voltage					
Output voltage (V_D)	Register VOSEL=00000	1.1	1.2	1.3	V
	Register VOSEL=00001	1.125	1.225	1.325	
	Register VOSEL=00010	1.15	1.25	1.35	
	Register VOSEL=00011	1.175	1.275	1.375	
	Register VOSEL=00100	1.2	1.3	1.4	
	Register VOSEL=00101	1.225	1.325	1.425	
	Register VOSEL=00110	1.25	1.35	1.45	
	Register VOSEL=10000	0.7	0.8	0.9	
	Register VOSEL=10001	0.725	0.825	0.925	
	Register VOSEL=10010	0.75	0.85	0.95	
	Register VOSEL=10011	0.775	0.875	0.975	
	Register VOSEL=10100	0.8	0.9	1.0	
	Register VOSEL=10101	0.825	0.925	1.025	
	Register VOSEL=10110	0.85	0.95	1.05	
	Register VOSEL=10111	0.875	0.975	1.075	
	Register VOSEL=11000	0.9	1	1.1	
	Register VOSEL=11001	0.925	1.025	1.125	
	Register VOSEL=11010	0.95	1.05	1.15	
	Register VOSEL=11011	0.975	1.075	1.175	
	Register VOSEL=11100	1.0	1.1	1.2	
	Register VOSEL=11101	1.025	1.125	1.225	

MediaTek Confidential Release for Cenon WCX

This document contains information that is proprietary to MediaTek Inc.

Unauthorized reproduction or disclosure of this information in whole or in part is strictly prohibited.

	Register VOSEL=11110	1.05	1.15	1.25	
	Register VOSEL=11111	1.075	1.175	1.275	
Output current (Id_max)			200		mA
Line regulation				0.2	%
Current limit		1.2x		5x	Id_max
Digital IO Voltage					
Output voltage (V_IO)		2.7	2.8	2.9	V
Output current (Iio_max)			200		mA
Line regulation				0.2	%
Current limit		1.2x		5x	Id_max
RF Voltage					
Output voltage (V_RF)		2.7	2.8	2.9	V
Output current (Ia_max)			150		mA
Line regulation				0.2	%
Output noise voltage	f =10Hz to 80 kHz		90		uVrms
Ripple rejection	10 Hz < freq. < 3 kHz		65		dB
Current limit		1.2x		5x	Id_max
Analog Voltage					
Output voltage (V_A)		2.7	2.8	2.9	V
Output current (Ia_max)			100		mA
Line regulation				0.2	%
Output noise voltage	f = 10 Hz to 80 kHz		90		uVrms
Ripple rejection	10 Hz < freq. < 3 kHz		65		dB
Current limit		1.2x		5x	Id_max
VTCXO Voltage					
Output voltage (V_TCXO)		2.7	2.8	2.9	V
Output current (Itcxo_max)			40		mA

MediaTek Confidential Release for Cenon WCX

This document contains information that is proprietary to MediaTek Inc.

Unauthorized reproduction or disclosure of this information in whole or in part is strictly prohibited.

Line regulation				0.2	%
Output noise voltage	f = 10 Hz to 80 kHz		90		µVrms
Ripple rejection	10 Hz < freq. < 3 kHz		65		dB
Current limit		1.2x		5x	Id_max
RTC Voltage					
Output voltage(@5uA loading)		2. 6	2. 8	3.0	V
Output current (Irtc_max)			2		mA
Off reverse input current			1		µA
External Memory Voltage					
Output voltage (V_M)	VMSEL=L	1.7	1.8	1.9	V
	VMSEL=H	2.8	2.9	3.0	V
Output current (Im_max)			150		mA
Line regulation				0.2	%
Current limit		1.2x		5x	Id_max
SIM Voltage					
Output voltage (V_SIM)	Register RG_VSIM_SEL=0	1.71	1.8	1.89	V
	Register RG_VSIM_SEL=1	2.85	3.0	3.15	V
Output current (Isim_max)			30		mA
Line regulation				0.2	%
Current limit		1.2x		5x	Id_max
SIM2 Voltage					
Output voltage (V_SIM2)	Register RG_VSIM2_VOSEL=000	1.235	1.3	1.365	V
	Register RG_VSIM2_VOSEL=001	1.425	1.5	1.575	V
	RG_VSIM2_VOSEL=010	1.71	1.8	1.89	
	RG_VSIM2_VOSEL=011	2.375	2.5	2.625	
	RG_VSIM2_VOSEL=100	2.66	2.8	2.94	

MediaTek Confidential Release for Cenon WCX

This document contains information that is proprietary to MediaTek Inc.

Unauthorized reproduction or disclosure of this information in whole or in part is strictly prohibited.

	RG_VSIM2_VOSEL=101	2.85	3. 0	3.15	
	RG_VSIM2_VOSEL=110	3.135	3.3	3.465	
Output current (Isim2_max)			30		mA
Line regulation				0.2	%
Current limit		1.2x		5x	Id_max
USB Voltage					
Output voltage (V_USB)		3.135	3.3	3.465	V
Output current (Iusb_max)			50		mA
Line regulation				0.2	%
Current limit		1.2x		5x	Id_max
Digital Camera Voltage					
Output voltage (V_CAM_D)	Register VCAM_D_VOSEL=000	1.235	1.3	1.365	V
	Register VCAM_D_VOSEL=001	1.425	1.5	1.575	V
	Register VCAM_D_VOSEL=010	1.71	1.8	1.89	V
	Register VCAM_D_VOSEL=011	2.375	2.5	2.625	V
	Register VCAM_D_VOSEL=100	2.66	2.8	2.94	V
	Register VCAM_D_VOSEL=101	2.85	3.0	3.15	V
	Register VCAM_D_VOSEL=110	3.135	3.3	3.465	V
Output current (Icamerd_max)			100		mA
Line regulation				0.2	%
Current limit		2x		8x	Id_max
Analog Camera Voltage					

MediaTek Confidential Release for Cenon WCX

This document contains information that is proprietary to MediaTek Inc.

Unauthorized reproduction or disclosure of this information in whole or in part is strictly prohibited.

Output voltage (V_CAM_A)	Register VCAM_A_SEL=00	1.425	1.5	1.575	V
	Register VCAM_A_SEL=01	1.71	1.8	1.89	V
	Register VCAM_A_SEL=10	2.375	2.5	2.625	V
	Register VCAM_A_SEL=11	2.66	2.8	2.94	V
Output current (Icamera_max)			150		mA
Line regulation				0.2	%
Current limit		1.2x		5x	Id_max
KEYPAD LED Driver					
Sink Current of Key-Pad LED Driver	Von<0.5V	60			mA
Vibrator Driver					
Output voltage (V_VIBR)	Register VIBR_VOSEL=000	1.235	1.3	1.365	V
	Register VIBR_VOSEL=001	1.425	1.5	1.575	V
	Register VIBR_VOSEL=010	1.71	1.8	1.89	V
	Register VIBR_VOSEL=011	2.375	2.5	2.625	V
	Register VIBR_VOSEL=100	2.66	2.8	2.94	V
	Register VIBR_VOSEL=101	2.85	3.0	3.15	V
	Register VIBR_VOSEL=110	3.135	3.3	3.465	V
Output current (Ivibr_max)			150		mA
Line regulation				0.2	%
Current limit		1.2x		5x	Id_max

6.2.7.8.3 SIM interface

Parameter	Conditions	Min.	Typical	Max.	Unit
Interface to 3 V SIM Card					
Volrst	I = 200 µA			0.36	V

MediaTek Confidential Release for Cenon WCX

This document contains information that is proprietary to MediaTek Inc.

Unauthorized reproduction or disclosure of this information in whole or in part is strictly prohibited.

Vohrst	I = -200 µA	0.9*VSIM			V
Volclk	I = 100 µA			0.4	V
Vohclk	I = -200 µA	0.9*VSIM			V
Vihsio , Vohsio	I = ±20 µA	VSIM-0.4			V
Iil	Vil = 0 V			-1	mA
Vol	Iol = 1 mA			0.4	V
Interface to 1.8 V SIM Card					
Volrst2	I = 200 µA			0.2*VSIM	V
Vohrst	I = -200 µA	0.9*VSIM			V
Volclk	I = 100 µA			0.12*VSIM	V
Vohclk	I = -200 µA	0.9*VSIM			V
Vil				0.15*VSIM	V
Vihsio , Vohsio	I = ±20 µA	VSIM-0.4			V
Iil	Vil = 0 V			-1	mA
Vol	Iol = 1 mA			0.15*VSIM	V
SIM Card Interface Timing					
SIO pull-up resistance to VSIM			5		kΩ
SRST, SIO rise/fall times	VSIM = 3, 1.8 V, load with 30 pF			1	µs
SCLK rise/fall times	VSIM = 3 V, CLK load with 30 pF			18	ns
	VSIM = 1.8 V, CLK load with 30 pF			50	ns
SCLK frequency	CLK load with 30 pF			5	MHz

MediaTek Confidential Release for Cenon WCX

This document contains information that is proprietary to MediaTek Inc.

Unauthorized reproduction or disclosure of this information in whole or in part is strictly prohibited.

SCLK duty cycle	SIMCLK Duty = 50%, fsimclk = 5 MHz	47		53	%
SCLK propagation delay			30	50	ns

6.2.7.8.4 Charger Circuit

Parameter	Conditions	Min.	Typical	Max.	Unit
AC charger input voltage		4.2		8	V
AC charger detect on threshold (Vchg_on)	VBAT<3.2V	4.2		7	V
	VBAT>=3.2V	VBAT +120mV		7	V
Maximum charging current (AC charging)	VBAT>=3.2V		0.16 / R_{sense}		A
Pre-charging current	VBAT<2.2V		50		mA
	2.2V<VBAT<3.3V (1) USB HOST (2) Dedicated Charger	TBD	70 200	TBD	mA
Pre-charging off threshold			3.2		V
Pre-charging off hysteresis			0.3		V
CC mode to CV mode threshold		4.05	4.1	4.15	V
BAT_ON (Vih)		2.33	2.47	2.6	V
GATEDRV rising time (T_r)	BAT_ON, or OV	1		5	µs
Over voltage protection threshold (OV)			4.35		V

6.2.7.8.5 Regulators and Drivers

Item	LDO	Voltage	Current	Description
1	VCORE	0.8V~1.35V(25mv/step)	200 mA	Digital core
2	VIO	2.8V	200 mA	Digital IO
3	VRF	2.8V	150 mA	RF chip

MediaTek Confidential Release for Cenon WCX

This document contains information that is proprietary to MediaTek Inc.

Unauthorized reproduction or disclosure of this information in whole or in part is strictly prohibited.

4	VA	2.8V	100 mA	Analog baseband
5	VRTC	2.8V	2 mA	Real-time clock
6	VM	1.8V / 2.9V	150 mA	External memory, selectable
7	VSIM	1.8V / 3.0V	30 mA	SIM card, selectable
8	VTCXO	2.8V	40 mA	13/26 MHz reference clock
9	VSIM2	1.3V/1.5V/1.8V/2.5V/2.8V/3.0V/3.3V	30 mA	SIM2 card, selectable
10	VUSB	3.3V	50 mA	USB
11	VIBR	1.3V/1.5V/1.8V/2.5V/2.8V/3.0V/3.3V	150 mA	Vibrator
12	VCAM_A	1.5V / 1.8V / 2.5V / 2.8V	150 mA	Analog camera power
13	VCAM_D	1.3V/1.5V/1.8V/2.5V/2.8V/3.0V/3.3V	100 mA	Digital camera power

Driver	Type	Current	Description
KPLED	Open-drain NMOS switch	60 mA	Drive the keypad LEDs
ISINK0	Open-drain NMOS switch	Up tp 24mA	Drive LCM backlight LED
ISINK1	Open-drain NMOS switch	Up tp 24mA	Drive LCM backlight LED
ISINK2	Open-drain NMOS switch	Up tp 24mA	Drive LCM backlight LED
ISINK3	Open-drain NMOS switch	Up tp 24mA	Drive LCM backlight LED

6.2.7.8.6 Class AB Audio Amplifier

Parameter	Conditions	Min.	Typical	Max.	Unit
Output Power (8 Ohm)	4.3V, THD+N=1%	800			mW
	3.7V, THD+N=1%	700			mW
	3.2V, THD+N=1%	500			mW
PSRR	VBAT=3.2/3.7/4.3V Vin=200mVpp				

MediaTek Confidential Release for Cenon WCX

This document contains information that is proprietary to MediaTek Inc.

Unauthorized reproduction or disclosure of this information in whole or in part is strictly prohibited.

	Input AC to Ground				
	217Hz	50	67		dB
	1KHz	50	67		dB
	3KHz	50	67		dB
	30KHz	50	53		dB
THD+N (8Ohm)	4.3V, 800mW, 1KHz, 25° C		0.02	1	%
	3.7V, 700mW, 1KHz, 25° C		0.02	1	%
	3.2V, 500mW, 1KHz, 25° C		0.02	1	%
SNR	VBAT=3.2V/4.3V 0.5W/0.8W, 8Ohm, 20Hz to 22KHz, A-weighted				
	3.2V, A-weighted	93			dB
	4.3V, A-wieghted	93			dB

6.3 PMU Registers Definition

ADDRESS	TITLE	DESCRIPTION
83010800	PMIC_VRF_CON0	
83010804	PMIC_VRF_CON1	
83010808	PMIC_VRF_CON2	
83010810	PMIC_VTCXO_CON0	
83010814	PMIC_VTCXO_CON1	
83010818	PMIC_VTCXO_CON2	
83010820	PMIC_VA_CON0	
83010824	PMIC_VA_CON1	

MediaTek Confidential Release for Cenon WCX

This document contains information that is proprietary to MediaTek Inc.

Unauthorized reproduction or disclosure of this information in whole or in part is strictly prohibited.

83010828	PMIC_VA_CON2	
83010830	PMIC_VCAMA_CON0	
83010834	PMIC_VCAMA_CON1	
83010838	PMIC_VCAMA_CON2	
83010840	PMIC_VCAMD_CON0	
83010844	PMIC_VCAMD_CON1	
83010848	PMIC_VCAMD_CON2	
83010850	PMIC_VIO_CON0	
83010854	PMIC_VIO_CON1	
83010858	PMIC_VIO_CON2	
83010860	PMIC_VUSB_CON0	
83010864	PMIC_VUSB_CON1	
83010868	PMIC_VUSB_CON2	
83010880	PMIC_VSIM1_CON0	
83010884	PMIC_VSIM1_CON1	
83010888	PMIC_VSIM1_CON2	
8301088C	PMIC_VSIM1_CON3	
83010890	PMIC_VSIM2_CON0	
83010894	PMIC_VSIM2_CON1	
83010898	PMIC_VSIM2_CON2	

MediaTek Confidential Release for Cenon WCX
MediaTek Confidential Release for Cenon WCX

This document contains information that is proprietary to MediaTek Inc.

Unauthorized reproduction or disclosure of this information in whole or in part is strictly prohibited.

8301089C	PMIC_VSIM2_CON3	
830108A0	PMIC_VRTC_CON0	
830108A4	PMIC_VRTC_CON1	
830108B0	PMIC_VIBR_CON0	
830108B4	PMIC_VIBR_CON1	
830108B8	PMIC_VIBR_CON2	
830108C0	PMIC_VM_CON0	
830108C4	PMIC_VM_CON1	
830108C8	PMIC_VM_CON2	
830108D0	PMIC_VCORE_CON0	
830108D4	PMIC_VCORE_CON1	
830108D8	PMIC_VCORE_CON2	
830108E0	PMIC_LDOS_CON	
830108F0	PMIC_INT_EN0	
830108F4	PMIC_INT_EN1	
830108F8	PMIC_OC_STATUS	
830108FC	PMIC_OC_FLAG	
83010900	PMIC_STARTUP_CON0	
83010904	PMIC_STARTUP_CON1	
83010908	PMIC_STARTUP_CON2	

MediaTek Confidential Release for Cenon WCX
MediaTek Confidential Release for Cenon WCX

This document contains information that is proprietary to MediaTek Inc.

Unauthorized reproduction or disclosure of this information in whole or in part is strictly prohibited.

8301090C	PMIC_STARTUP_CON3	
83010980	PMIC_ISINK0_CON0	
83010984	PMIC_ISINK0_CON1	
83010988	PMIC_ISINK0_CON2	
83010990	PMIC_ISINK1_CON0	
830109A0	PMIC_ISINK2_CON0	
830109B0	PMIC_ISINK3_CON0	
830109C0	PMIC_KPLED_CON0	
830109D0	PMIC_CLASSAB_CON0	
830109D4	PMIC_CLASSAB_CON1	
83010A00	PMIC_CHR_CON0	
83010A04	PMIC_CHR_CON1	
83010A08	PMIC_CHR_CON2	
83010A0C	PMIC_CHR_CON3	
83010A10	PMIC_CHR_CON4	
83010A14	PMIC_CHR_CON5	
83010A18	PMIC_CHR_CON6	
83010A1C	PMIC_CHR_CON7	
83010A20	PMIC_CHR_CON8	
83010A24	PMIC_CHR_CON9	

MediaTek Confidential Release for Cenon WCX
MediaTek Confidential Release for Cenon WCX

This document contains information that is proprietary to MediaTek Inc.

Unauthorized reproduction or disclosure of this information in whole or in part is strictly prohibited.

83010A28	PMIC_CHR_CON10	
83010A2C	PMIC_CHR_CON11	
83010A30	PMIC_CHR_CON12	
83010A34	PMIC_CHR_CON13	
83010A38	PMIC_CHR_CON14	
83010A3C	PMIC_CHR_CON15	
83010A40	PMIC_CHR_CON16	
83010F00	FMTR_CON0	
83010F04	FMTR_CON1	
83010F08	FMTR_DATA	
83010F10	MIXEDSYS_MON_CON0	
83010F14	MIXEDSYS_MON_CON1	
83010F18	MIXEDSYS_MON_CON2	
83010F20	ABB_MON_CON0	
83010F30	SIM_MON_CON0	
83010F80	ACIF_RES1_AC_CON0	
83010F84	ACIF_RES1_AC_CON1	
83010F88	ACIF_RES1_STATUS	

6.3.1 PMU Register Setting

83010800h PMIC_VRF_CON0 **PMIC_VRF_CON0**

MediaTek Confidential Release for Cenon WCX

This document contains information that is proprietary to MediaTek Inc.

Unauthorized reproduction or disclosure of this information in whole or in part is strictly prohibited.

Bit	15	14	13	12	11	10	9	8	7	6	5	4	3	2	1	0
Name		VRF_OC_FLAG(R)		CCI_VRF_OC_AUTO_OFF		RG_VRF_PDNMOS_EN								RG_VRF_RS_EN	VRF_ON_SEL	RG_VRF_EN
Type		R		RW		RW								RW	RW	RW
Reset		0		0		1								0	0	0

VRF_OC_FLAG(R) Deglitched signal for VRF_CL_STATUS

CCI_VRF_OC_AUTO_OFF Automatically turn off VRF LDO if VRF_OC_FLAG

RG_VRF_PDNMOS_EN Vrf output power down Enable

(1'b1: enable output powerdown; 1'b0: disable output powerdown)

RG_VRF_RS_EN Vrf remote sense Enable

(1'b1: enable; 1'b0: disable)

VRF_ON_SEL VRF on manual mode

0: auto mode , 1: manual mode

RG_VRF_EN Vrf Enable while VRF_ON_SEL =1

(1'b1: enable; 1'b0: disable)

83010804h **PMIC_VRF_CON1** **PMIC_VRF_CON1**

Bit	15	14	13	12	11	10	9	8	7	6	5	4	3	2	1	0
Name									RG_VRF_CAL							
Type									RW							
Reset									0							

RG_VRF_CAL Vrf Voltage Calibration

RG_VRF_CAL<3:0>	0000	0001	0010	0011	0100	0101	0110	0111
Vout	±0	-20mV	-40mV	-60mV	-80mV	-100mV	-120mV	-140mV
RG_VRF_CAL<3:0>	1000	1001	1010	1011	1100	1101	1110	1111
Vout	+160mV	+140mV	+120mV	+100mV	+80mV	+60mV	+40mV	+20mV

83010808h **PMIC_VRF_CON2** **PMIC_VRF_CON2**

Bit	15	14	13	12	11	10	9	8	7	6	5	4	3	2	1	0

MediaTek Confidential Release for Cenon WCX

This document contains information that is proprietary to MediaTek Inc.

Unauthorized reproduction or disclosure of this information in whole or in part is strictly prohibited.

Name									CCI_VRF_STBTD	CCI_VRF_OC_GEAR				
Type									RW	RW				
Reset									0	0				

CCI_VRF_STBTD : Delay time for STB after VRF_EN

00 : 213us

01: 427us

10: 610us

11: 823us

CCI_VRF_OC_GEAR : VRF OC Flag deglitch time

00 : 91us

01: 213us

10: 427us

11: 823us

83010810h PMIC_VTCXO_CON0 **PMIC_VTCXO_CON0**

Bit	15	14	13	12	11	10	9	8	7	6	5	4	3	2	1	0
Name		VTCXO_OC_FLAG(R)		CCI_VTCXO_OC_AUTO_OFF		RG_VTCXO_PDNMOS_EN									VTCXO_ON_SEL	RG_VTCXO_EN
Type		R		RW		RW									RW	RW
Reset		0		0		1									0	0

VTCXO_OC_FLAG(R) Deglitched signal for VTCXO_CL_STATUS

CCI_VTCXO_OC_AUTO_OFF Automatically turn off VTCXO LDO if VTCXO_OC_FLAG

RG_VTCXO_PDNMOS_EN Vtcxo output power down Enable

(1'b1: enable output powerdown; 1'b0: disable output powerdown)

VTCXO_ON_SEL Vtcxo on manual mode

0: auto mode , 1: manual mode

MediaTek Confidential Release for Cenon WCX

This document contains information that is proprietary to MediaTek Inc.

Unauthorized reproduction or disclosure of this information in whole or in part is strictly prohibited.

RG_VTCXO_EN Vtcxo Enable while VRF_ON_SEL =1

(1'b1: enable; 1'b0: disable)

83010814h PMIC_VTCXO_CON1 **PMIC_VTCXO_CON1**

Bit	15	14	13	12	11	10	9	8	7	6	5	4	3	2	1	0
Name									RG_VTCXO_CAL							
Type									RW							
Reset									0							

RG_VTCXO_CAL Vtcxo Voltage Calibration

RG_VTCXO_CAL<3:0>	0000	0001	0010	0011	0100	0101	0110	0111
Vout	±0	-20mV	-40mV	-60mV	-80mV	-100mV	-120mV	-140mV
RG_VTCXO_CAL<3:0>	1000	1001	1010	1011	1100	1101	1110	1111
Vout	+160mV	+140mV	+120mV	+100mV	+80mV	+60mV	+40mV	+20mV

83010818h PMIC_VTCXO_CON2 **PMIC_VTCXO_CON2**

Bit	15	14	13	12	11	10	9	8	7	6	5	4	3	2	1	0
Name									CCI_VTCXO_STBTD		CCI_VTCXO_OC_GEAR				CCI_SRCLKEN	
Type									RW		RW				RW	
Reset									0		0				1	

CCI_VTCXO_STBTD : Delay time for STB after VTCXO_EN

00 : 213us

01: 427us

10: 610us

11: 823us

CCI_VTCXO_OC_GEAR : VTCXO OC Flag deglitch time

00 : 91us

01: 213us

MediaTek Confidential Release for Cenon WCX

This document contains information that is proprietary to MediaTek Inc.

Unauthorized reproduction or disclosure of this information in whole or in part is strictly prohibited.

10: 427us

11: 823us

CCI_SRCLKEN SRCLKEN to PMIC force enable control signal

0 disable (****controlled by sleep control module)
1 enable

83010820h PMIC_VA_CON0 **PMIC_VA_CON0**

Bit	15	14	13	12	11	10	9	8	7	6	5	4	3	2	1	0
Name		VA_OC_FLAG(R)		CCI_VA_OC_AUTO_OFF		RG_VA_PDNMOS_EN								RG_VA_RS_EN		RG_VA_EN
Type		R		RW		RW								RW		RW
Reset		0		0		1								0		1

VA_OC_FLAG(R) Deglitched signal for VA_CL_STATUS

CCI_VA_OC_AUTO_OFF Automatically turn off VA LDO if VA_OC_FLAG

RG_VA_PDNMOS_EN Va output power down Enable

(1'b1: enable output powerdown; 1'b0: disable output powerdown)

RG_VA_RS_EN Va remote sense Enable

(1'b1: enable; 1'b0: disable)

RG_VA_EN Va enable for testing

(1'b1: enable; 1'b0: disable)

83010824h PMIC_VA_CON1 **PMIC_VA_CON1**

Bit	15	14	13	12	11	10	9	8	7	6	5	4	3	2	1	0
Name									RG_VA_CAL							
Type									RW							
Reset									0							

RG_VA_CAL Va Voltage Calibration

RG_VA_CAL<3:0>	0000	0001	0010	0011	0100	0101	0110	0111
Vout	±0	-20mV	-40mV	-60mV	-80mV	-100mV	-120mV	-140mV

MediaTek Confidential Release for Cenon WCX

This document contains information that is proprietary to MediaTek Inc.

Unauthorized reproduction or disclosure of this information in whole or in part is strictly prohibited.

RG_VA_CAL<3:0>	1000	1001	1010	1011	1100	1101	1110	1111
Vout	+160mV	+140mV	+120mV	+100mV	+80mV	+60mV	+40mV	+20mV

83010828h **PMIC_VA_CON2** **PMIC_VA_CON2**

Bit	15	14	13	12	11	10	9	8	7	6	5	4	3	2	1	0
Name									CCI_VA_STBTD		CCI_VA_OC_GEAR				QI_VA_LP_EN	
Type									RW		RW				RW	
Reset									0		0				0	

CCI_VA_STBTD : Delay time for STB after VA_EN

00 : 213us

01: 427us

10: 610us

11: 823us

CCI_VA_OC_GEAR : VA OC Flag deglitch time

00 : 91us

01: 213us

10: 427us

11: 823us

QI_VA_LP_EN Va low power mode enable

(1'b1: low power mode; 1'b0: typical mode)

83010830h **PMIC_VCAMA_CON0** **PMIC_VCAMA_CON0**

Bit	15	14	13	12	11	10	9	8	7	6	5	4	3	2	1	0
Name		VCAMA_OC_FLAG(R)		CCI_VCAMA_OC_AUTO_OFF		RG_VCAMA_PDNMOS_EN					RG_VCAMA_VOSEL					RG_VCAMA_EN
Type		R		RW		RW					RW					RW
Reset		0		0		1					0					0

VCAMA_OC_FLAG(R) Deglitched signal for VCAMA_CL_STATUS

MediaTek Confidential Release for Cenon WCX

This document contains information that is proprietary to MediaTek Inc.

Unauthorized reproduction or disclosure of this information in whole or in part is strictly prohibited.

CCI_VCAMA_OC_AUTO_OFF Automatically turn off VCAMA LDO if VCAMA_OC_FLAG

RG_VCAMA_PDNMOS_EN Vcama output power down Enable

(1'b1: enable output powerdown; 1'b0: disable output powerdown)

RG_VCAMA_VOSEL Vcama Output Voltage Selection	00	01	10	11
Vout	1.5V	1.8V	2.5V	2.8V

RG_VCAMA_EN Vcama Enable

(1'b1: enable; 1'b0: disable)

83010834h PMIC_VCAMA_CON1 **PMIC_VCAMA_CON1**

Bit	15	14	13	12	11	10	9	8	7	6	5	4	3	2	1	0
Name									RG_VCAMA_CAL							
Type									RW							
Reset									0							

RG_VCAMA_CAL Vcama Voltage Calibration

RG_VCAMA_CAL<3:0>	0000	0001	0010	0011	0100	0101	0110	0111
Vout	±0	-20mV	-40mV	-60mV	-80mV	-100mV	-120mV	-140mV
RG_VCAMA_CAL<3:0>	1000	1001	1010	1011	1100	1101	1110	1111
Vout	+160mV	+140mV	+120mV	+100mV	+80mV	+60mV	+40mV	+20mV

83010838h PMIC_VCAMA_CON2 **PMIC_VCAMA_CON2**

Bit	15	14	13	12	11	10	9	8	7	6	5	4	3	2	1	0
Name									CCI_VCAMA_STBTD		CCI_VCAMA_OC_GEAR					
Type									RW		RW					
Reset									0		0					

CCI_VCAMA_STBTD: Delay time for STB after VCAMA_EN

MediaTek Confidential Release for Cenon WCX

This document contains information that is proprietary to MediaTek Inc.

Unauthorized reproduction or disclosure of this information in whole or in part is strictly prohibited.

00 : 213us

01: 427us

10: 610us

11: 823us

CCI_VCAMA_OC_GEAR : VCAMA OC Flag deglitch time

00 : 91us

01: 213us

10: 427us

11: 823us

83010840h PMIC_VCAMD_CON0 **PMIC_VCAMD_CON0**

Bit	15	14	13	12	11	10	9	8	7	6	5	4	3	2	1	0
Name		VCAMD_OC_FLAG(R)		CCI_VCAMD_OC_AUTO_OFF		RG_VCAMD_PDNMOS_EN				RG_VCAMD_VOSEL						RG_VCAMD_EN
Type		R		RW		RW				RW						RW
Reset		0		0		1				100						0

VCAMD_OC_FLAG(R) Deglitched signal for VCAMD_CL_STATUS

CCI_VCAMD_OC_AUTO_OFF Automatically turn off VCAMD LDO if VCAMD_OC_FLAG

RG_VCAMD_PDNMOS_EN VCAMD POWER DOWN NMOS Enable

(1'b1: enable; 1'b0: disable)

RG_VCAMD_VOSEL VCAMD output selection signal	000	001	010	011	100	101	110	111
Vout	1.3V	1.5V	1.8V	2.5V	2.8V	3.0V	3.3V	3.3V

RG_VCAMD_EN VCAMD Enable

(1'b1: enable; 1'b0: disable)

83010844h PMIC_VCAMD_CON1 **PMIC_VCAMD_CON1**

MediaTek Confidential Release for Cenon WCX

This document contains information that is proprietary to MediaTek Inc.

Unauthorized reproduction or disclosure of this information in whole or in part is strictly prohibited.

Bit	15	14	13	12	11	10	9	8	7	6	5	4	3	2	1	0
Name									RG_VCAMD_CAL							
Type									RW							
Reset									0							

RG_VCAMD_CAL VCAMD Voltage Calibration

(Notes: when the output is 1.3V, the calibration range is -60mV~+160mV.)

RG_VCAMD_CAL<3:0>	0000	0001	0010	0011	0100	0101	0110	0111
Vout	±0	-20mV	-40mV	-60mV	-80mV	-100mV	-120mV	-140mV
RG_VCAMD_CAL<3:0>	1000	1001	1010	1011	1100	1101	1110	1111
Vout	+160mV	+140mV	+120mV	+100mV	+80mV	+60mV	+40mV	+20mV

83010848h PMIC_VCAMD_CON2 **PMIC_VCAMD_CON2**

Bit	15	14	13	12	11	10	9	8	7	6	5	4	3	2	1	0
Name									CCI_VCAMD_STBTD		CCI_VCAMD_OC_GEAR					
Type									RW		RW					
Reset									0		0					

CCI_VCAMD_STBTD : Delay time for STB after VCAMD_EN

00 : 213us

01: 427us

10: 610us

11: 823us

CCI_VCAMD_OC_GEAR : VCAMD OC Flag deglitch time

00 : 91us

01: 213us

10: 427us

11: 823us

MediaTek Confidential Release for Cenon WCX

This document contains information that is proprietary to MediaTek Inc.

Unauthorized reproduction or disclosure of this information in whole or in part is strictly prohibited.

83010850h PMIC_VIO_CON0 **PMIC_VIO_CON0**

Bit	15	14	13	12	11	10	9	8	7	6	5	4	3	2	1	0
Name		VIO_OC_FLAG		CCI_VIO_OC_AUTO_OFF		RG_VIO_PDNMOS_EN										RG_VIO_EN
Type		R		RW		RW										RW
Reset		0		0		1										1

VIO_OC_FLAG(R) Deglitched signal for VIO_CL_STATUS

CCI_VIO_OC_AUTO_OFF Automatically turn off VIO LDO if VIO_OC_FLAG

RG_VIO_PDNMOS_EN VIO POWER DOWN NMOS Enable

(1'b1: enable; 1'b0: disable)

RG_VIO_EN VIO enable for testing

(1'b1: enable; 1'b0: disable)

83010854h PMIC_VIO_CON1 **PMIC_VIO_CON1**

Bit	15	14	13	12	11	10	9	8	7	6	5	4	3	2	1	0
Name									RG_VIO_CAL							
Type									RW							
Reset									0							

RG_VIO_CAL VIO Voltage Calibration

RG_VIO_CAL<3:0>	0000	0001	0010	0011	0100	0101	0110	0111
Vout	±0	-20mV	-40mV	-60mV	-80mV	-100mV	-120mV	-140mV
RG_VIO_CAL<3:0>	1000	1001	1010	1011	1100	1101	1110	1111
Vout	+160mV	+140mV	+120mV	+100mV	+80mV	+60mV	+40mV	+20mV

83010858h PMIC_VIO_CON2 **PMIC_VIO_CON2**

Bit	15	14	13	12	11	10	9	8	7	6	5	4	3	2	1	0
Name											CCI_VIO_OC_GEAR					
Type											RW					
Reset											0					

MediaTek Confidential Release for Cenon WCX

This document contains information that is proprietary to MediaTek Inc.

Unauthorized reproduction or disclosure of this information in whole or in part is strictly prohibited.

MediaTek Confidential Release for Cenon WCX

CCI_VIO_OC_GEAR : VIO OC Flag deglitch time

00 : 91us

01: 213us

10: 427us

11: 823us

83010860h PMIC_VUSB_CON0 **PMIC_VUSB_CON0**

Bit	15	14	13	12	11	10	9	8	7	6	5	4	3	2	1	0
Name		VUSB_OC_FLAG		CCI_VUSB_OC_AUTO_OFF		RG_VUSB_PDNMOS_EN										RG_VUSB_EN
Type		R		RW		RW										RW
Reset		0		0		1										1

VUSB_OC_FLAG(R) Deglitched signal for VUSB_CL_STATUS

CCI_VUSB_OC_AUTO_OFF Automatically turn off VUSB LDO if VUSB_OC_FLAG

RG_VUSB_PDNMOS_EN VUSB output power down enable

RG_VUSB_EN Vusb enable for testing
(1'b1: enable; 1'b0: disable)

83010864h PMIC_VUSB_CON1 **PMIC_VUSB_CON1**

Bit	15	14	13	12	11	10	9	8	7	6	5	4	3	2	1	0
Name									RG_VUSB_CAL							
Type									RW							
Reset									0							

RG_VUSB_CAL VUSB Voltage Calibration

RG_VUSB_CAL<3:0>	0000	0001	0010	0011	0100	0101	0110	0111
Vout	±0	-20mV	-40mV	-60mV	-80mV	-100mV	-120mV	-140mV
RG_VUSB_CAL<3:0>	1000	1001	1010	1011	1100	1101	1110	1111

This document contains information that is proprietary to MediaTek Inc.

Unauthorized reproduction or disclosure of this information in whole or in part is strictly prohibited.

Vout	+160mV	+140mV	+120mV	+100mV	+80mV	+60mV	+40mV	+20mV

83010868h PMIC_VUSB_CON2 **PMIC_VUSB_CON2**

Bit	15	14	13	12	11	10	9	8	7	6	5	4	3	2	1	0
Name									CCI_VUSB_STBTD		CCI_VUSB_OC_GEAR					
Type									RW		RW					
Reset									0		0					

CCI_VUSB_STBTD : Delay time for STB after VUSB_EN

00 : 213us

01: 427us

10: 610us

11: 823us

CCI_VUSB_OC_GEAR : VUSB OC Flag deglitch time

00 : 91us

01: 213us

10: 427us

11: 823us

83010880h PMIC_VSIM1_CON0 **PMIC_VSIM1_CON0**

Bit	15	14	13	12	11	10	9	8	7	6	5	4	3	2	1	0
Name		VSIM1_OC_FLAG(R)		CCI_VSIM1_OC_AUTO_OFF		RG_VSIM1_PDN_MOS_EN						CCI_VSIM1_VOSEL				CCI_VSIM1_EN
Type		R		RW		RW						RW				RW
Reset		0		0		1						0				0

VSIM1_OC_FLAG(R) Deglitched signal for VSIM1_CL_STATUS

CCI_VSIM1_OC_AUTO_OFF Automatically turn off VSIM1 LDO if VSIM1_OC_FLAG

MediaTek Confidential Release for Cenon WCX

This document contains information that is proprietary to MediaTek Inc.

Unauthorized reproduction or disclosure of this information in whole or in part is strictly prohibited.

RG_VSIM1_PDNMOS_EN VSIM1 output power down enable

CCI_VSIM1_VOSEL VSIM1 Output Voltage Selection Signal

==> only works at VSIM1_GPLDO_EN(@VSIM1_CON2) = 1

CCI_VSIM1_VOSEL	0	1
Vout	1.8V	3.0V

CCI_VSIM1_EN cci mode VSIM1 Enable

==> only works at VSIM1_GPLDO_EN(@VSIM1_CON2) = 1

(1'b1: enable; 1'b0: disable)

83010884h PMIC_VSIM1_CON1 **PMIC_VSIM1_CON1**

Bit	15	14	13	12	11	10	9	8	7	6	5	4	3	2	1	0
Name									RG_VSIM1_CAL							CCI_VSIM1_CSTOP
Type									RW							W
Reset									0							0

RG_VSIM1_CAL VSIM1 Voltage Calibration	0000	0001	0010	0011	0100	0101	0110	0111
Vout	±0	-20mV	-40mV	-60mV	-80mV	-100mV	-120mV	-140mV
RG_VSIM1_CAL<3:0>	1000	1001	1010	1011	1100	1101	1110	1111
Vout	+160mV	+140mV	+120mV	+100mV	+80mV	+60mV	+40mV	+20mV

83010888h PMIC_VSIM1_CON2 **PMIC_VSIM1_CON2**

Bit	15	14	13	12	11	10	9	8	7	6	5	4	3	2	1	0
Name									CCI_VSIM1_		CCI_VSIM1_				VSIM1_G	

MediaTek Confidential Release for Cenon WCX

This document contains information that is proprietary to MediaTek Inc.

Unauthorized reproduction or disclosure of this information in whole or in part is strictly prohibited.

									STBTD	OC_GEAR			PLDO_EN	
Type									RW	RW			RW	
Reset									0	0			0	

CCI_VSIM1_STBTD : Delay time for STB after VSIM1_EN

00 : 213us

01: 427us

10: 610us

11: 823us

CCI_VSIM1_OC_GEAR : VSIM1 OC Flag deglitch time

00 : 91us

01: 213us

10: 427us

11: 823us

VSIM1_GPLDO_EN The control selection of VSIM1 LDO enable & voltage, which is controlled by SIM controller circuit or VSIM1_CON0

0 VSIM1 LDO is controlled by SIM controller

1 VSIM1 LDO is controlled by VSIM_CON0

8301088Ch **PMIC_VSIM1_CON3** **PMIC_VSIM1_CON3**

Bit	15	14	13	12	11	10	9	8	7	6	5	4	3	2	1	0
Name							RG_SIM_SRP		RG_SIM_SRN		RG_SIM_BIAS		RG_SIMIO_DRV			
Type							RW		RW		RW		RW			
Reset							0		0		10		0			

RG_SIM_SRP SIM SCLK slew rate control. PMOS path speed tuning

RG_SIM_SRP[1:0]	00 (default)	01	10	11
SCLK slew rate	1X	1.1X	0.9X	1X

RG_SIM_SRN SIM SCLK slew rate control. NMOS path speed tuning

MediaTek Confidential Release for Cenon WCX

This document contains information that is proprietary to MediaTek Inc.

Unauthorized reproduction or disclosure of this information in whole or in part is strictly prohibited.

RG_SIM_SRN[1:0]	00 (default)	01	10	11
SCLK slew rate	1X	1.1X	0.9X	1X

RG_SIM_BIAS SIM slew rate control. Bias current adjustment bits

RG_SIM_BIAS[1:0]	00	01	10 (default)	11
Bias current	1X	1.2X	1.5X	2X

RG_SIMIO_DRV SIO input pull-up resistor adjustment

RG_SIMIO_DRV[2:0]	1XX	000	001	010	011
Pull up resistor (kohm)	disable	5	3.3	20	6.7

83010890h PMIC_VSIM2_CON0 **PMIC_VSIM2_CON0**

Bit	15	14	13	12	11	10	9	8	7	6	5	4	3	2	1	0
Name		VSIM2_OC_FLAG(R)		CCI_VSIM2_OC_AUTO_OFF		RG_VSIM2_PDNMOS_EN				CCI_VSIM2_VOSEL						CCI_VSIM2_EN
Type		R		RW		RW				RW						RW
Reset		0		0		0				0						0

VSIM2_OC_FLAG(R) Deglitched signal for VSIM2_CL_STATUS

CCI_VSIM2_OC_AUTO_OFF Automatically turn off VSIM2 LDO if VSIM2_OC_FLAG

RG_VSIM2_PDNMOS_EN VSIM2 output power down enable

CCI_VSIM2_VOSEL VSIM2 Output Voltage Selection Signal

==> only works at VSIM2_GPLDO_EN(@VSIM2_CON2) = 1

RG_VSIM2_VOSEL<2:0>	000	001	010	011	100	101	110	111
Vout	1.3V	1.5V	1.8V	2.5V	2.8V	3.0V	3.3V	3.3V

CCI_VSIM2_EN cci mode VSIM2 Enable

==> only works at VSIM2_GPLDO_EN(@VSIM2_CON2) = 1
(1'b1: enable; 1'b0: disable)

83010894h PMIC_VSIM2_CON1 **PMIC_VSIM2_CON1**

MediaTek Confidential Release for Cenon WCX

This document contains information that is proprietary to MediaTek Inc.

Unauthorized reproduction or disclosure of this information in whole or in part is strictly prohibited.

Bit	15	14	13	12	11	10	9	8	7	6	5	4	3	2	1	0
Name									RG_VSIM2_CAL							CCI_VSIM2_CSTOP
Type									RW							W
Reset									0							0

RG_VSIM2_CAL VSIM2 Voltage Calibration

(Notes: when the output is 1.3V, the calibration range is -60mV~+160mV.)

RG_VSIM2_CAL VSIM2 Voltage Calibration	0000	0001	0010	0011	0100	0101	0110	0111
Vout	±0	-20mV	-40mV	-60mV	-80mV	-100mV	-120mV	-140mV
RG_VSIM2_CAL<3:0>	1000	1001	1010	1011	1100	1101	1110	1111
Vout	+160mV	+140mV	+120mV	+100mV	+80mV	+60mV	+40mV	+20mV

83010898h PMIC_VSIM2_CON2 **PMIC_VSIM2_CON2**

Bit	15	14	13	12	11	10	9	8	7	6	5	4	3	2	1	0
Name									CCI_VSIM2_STBTD		CCI_VSIM2_OC_GEAR				VSIM2_GPLDO_EN	
Type									RW		RW				RW	
Reset									0		0				0	

CCI_VSIM2_STBTD : Delay time for STB after VSIM2_EN

00 : 213us

01: 427us

MediaTek Confidential Release for Cenon WCX

This document contains information that is proprietary to MediaTek Inc.

Unauthorized reproduction or disclosure of this information in whole or in part is strictly prohibited.

10: 610us

11: 823us

CCI_VSIM2_OC_GEAR : VSIM2 OC Flag deglitch time

00 : 91us

01: 213us

10: 427us

11: 823us

VSIM2_GPLDO_EN The control selection of VSIM2 LDO enable & voltage, which is controlled by SIM controller circuit or VSIM2_CON0

0 VSIM2 LDO is controlled by SIM controller

1 VSIM2 LDO is controlled by VSIM2_CON0

8301089Ch **PMIC_VSIM2_CON3** **PMIC_VSIM2_CON3**

Bit	15	14	13	12	11	10	9	8	7	6	5	4	3	2	1	0
Name							RG_SIM2_SRP		RG_SIM2_SRN		RG_SIM2_BIAS		RG_SIMIO2_DRV			RG_SIM2_MODE
Type							RW		RW		RW		RW			RW
Reset							0		0		10		0			0

RG_SIM2_SRP SIM2 SCLK slew rate control. PMOS path speed tuning

RG_SIM2_SRP[1:0]	00 (default)	01	10	11
SCLK2 slew rate	1X	1.1X	0.9X	1X

RG_SIM2_SRN SIM2 SCLK slew rate control. NMOS path speed tuning

RG_SIM2_SRN[1:0]	00 (default)	01	10	11
SCLK2 slew rate	1X	1.1X	0.9X	1X

RG_SIM2_BIAS SIM2 slew rate control. Bias current adjustment bits

RG_SIM2_BIAS[1:0]	00	01	10 (default)	11

MediaTek Confidential Release for Cenon WCX

This document contains information that is proprietary to MediaTek Inc.

Unauthorized reproduction or disclosure of this information in whole or in part is strictly prohibited.

Bias current	1X	1.2X	1.5X	2X

RG_SIMIO2_DRV SIO2 input pull-up resistor adjustment

RG_SIMIO2_DRV[2:0]	1XX	000	001	010	011
Pull up resistor (kohm)	disable	5	3.3	20	6.7

RG_SIM2_MODE Enable SIM2 GPIO mode

0: SIM mode
1: GPIO mode

830108A0h PMIC_VRTC_CON0 **PMIC_VRTC_CON0**

Bit	15	14	13	12	11	10	9	8	7	6	5	4	3	2	1	0
Name																RG_VRTC_EN
Type																RW
Reset																1

RG_VRTC_EN Vrtc enable for testing

(1'b1: enable; 1'b0: disable)

830108A4h PMIC_VRTC_CON1 **PMIC_VRTC_CON1**

Bit	15	14	13	12	11	10	9	8	7	6	5	4	3	2	1	0
Name									RG_VRTC_CAL							
Type									RW							
Reset									0							

RG_VRTC_CAL Vrtc Voltage Calibration

RG_VRTC_CAL<3:0>	0000	0001	0010	0011	0100	0101	0110	0111
Vout	±0	-20mV	-40mV	-60mV	-80mV	-100mV	-120mV	-140mV
RG_VRTC_CAL<3:0>	1000	1001	1010	1011	1100	1101	1110	1111
Vout	+160mV	+140mV	+120mV	+100mV	+80mV	+60mV	+40mV	+20mV

830108B0h PMIC_VIBR_CON0 **PMIC_VIBR_CON0**

MediaTek Confidential Release for Cenon WCX

This document contains information that is proprietary to MediaTek Inc.

Unauthorized reproduction or disclosure of this information in whole or in part is strictly prohibited.

15	14	13	12	11	10	9	8	7	6	5	4	3	2	1	0
	VIBR_OC_FLAG(R)		CCI_VIBR_OC_AUTO_OFF		RG_VIBR_PDNMOS_EN					RG_VIBR_VOSEL					CCI_VIBR_EN
	R		RW		RW					RW					RW
	0		0		1					100					0

VIBR_OC_FLAG(R) Deglitched signal for VIBR_CL_STATUS

CCI_VIBR_OC_AUTO_OFF Automatically turn off VIBR LDO if VIBR_OC_FLAG

RG_VIBR_PDNMOS_EN VIBR POWER DOWN NMOS Enable

(1'b1: enable; 1'b0: disable)

RG_VIBR_VOSEL VIBR output selection signal

RG_VIBR_VOSEL<2:0>	000	001	010	011	100	101	110	111
Vout	1.3V	1.5V	1.8V	2.5V	2.8V	3.0V	3.3V	3.3V

CCI_VIBR_EN cci mode VIBR Enable

(1'b1: enable; 1'b0: disable)

830108B4h **PMIC_VIBR_CON1** **PMIC_VIBR_CON1**

Bit	15	14	13	12	11	10	9	8	7	6	5	4	3	2	1	0
Name									RG_VIBR_CAL							
Type									RW							
Reset									0							

RG_VIBR_CAL VIBR Voltage Calibration

(Notes: when the output is 1.3V, the calibration range is -60mV~+160mV.)

RG_VIBR_CAL<3:0>	0000	0001	0010	0011	0100	0101	0110	0111
Vout	±0	-20mV	-40mV	-60mV	-80mV	-100mV	-120mV	-140mV
RG_VIBR_CAL<3:0>	1000	1001	1010	1011	1100	1101	1110	1111
Vout	+160mV	+140mV	+120mV	+100mV	+80mV	+60mV	+40mV	+20mV

MediaTek Confidential Release for Cenon WCX

This document contains information that is proprietary to MediaTek Inc.

Unauthorized reproduction or disclosure of this information in whole or in part is strictly prohibited.

MediaTek Confidential Release for Cenon WCX

830108B8h **PMIC_VIBR_CON2** **PMIC_VIBR_CON2**

Bit	15	14	13	12	11	10	9	8	7	6	5	4	3	2	1	0
Name									CCI_VIBR_STBTD		CCI_VIBR_OC_GEAR					
Type									RW		RW					
Reset									0		0					

CCI_VIBR_STBTD : Delay time for STB after VIBR_EN

00 : 213us

01: 427us

10: 610us

11: 823us

CCI_VIBR_OC_GEAR : VIBR OC Flag deglitch time

00 : 91us

01: 213us

10: 427us

11: 823us

830108C0h **PMIC_VM_CON0** **PMIC_VM_CON0**

Bit	15	14	13	12	11	10	9	8	7	6	5	4	3	2	1	0
Name		VM_OC_FLAG		CCI_VM_OC_AUTO_OFF		RG_VM_PDNMOS_EN										RG_VM_EN
Type		R		RW		RW										RW
Reset		0		0		1										1

VM_OC_FLAG(R) Deglitched signal for VM_CL_STATUS

CCI_VM_OC_AUTO_OFF Automatically turn off VM LDO if VM_OC_FLAG

MediaTek Confidential Release for Cenon WCX

This document contains information that is proprietary to MediaTek Inc.

Unauthorized reproduction or disclosure of this information in whole or in part is strictly prohibited.

RG_VM_PDNMOS_EN VM POWER DOWN NMOS Enable
(1'b1: enable; 1'b0: disable)

RG_VM_EN Vm enable for testing
(1'b1: enable; 1'b0: disable)

830108C4h PMIC_VM_CON1 **PMIC_VM_CON1**

Bit	15	14	13	12	11	10	9	8	7	6	5	4	3	2	1	0
Name									RG_VM_CAL							
Type									RW							
Reset									0							

RG_VM_CAL VM Voltage Calibration

RG_VM_CAL<3:0>	0000	0001	0010	0011	0100	0101	0110	0111
Vout	±0	-20mV	-40mV	-60mV	-80mV	-100mV	-120mV	-140mV
RG_VM_CAL<3:0>	1000	1001	1010	1011	1100	1101	1110	1111
Vout	+160mV	+140mV	+120mV	+100mV	+80mV	+60mV	+40mV	+20mV

830108C8h PMIC_VM_CON2 **PMIC_VM_CON2**

Bit	15	14	13	12	11	10	9	8	7	6	5	4	3	2	1	0
Name					CCI_VM_STBTD						CCI_VM_OC_GEAR					
Type					RW						RW					
Reset					0						0					

CCI_VM_STBTD : Delay time for STB after VM_EN

00 : 213us

01: 427us

10: 610us

11: 823us

CCI_VM_OC_GEAR : VM OC Flag deglitch time

00 : 91us

MediaTek Confidential Release for Cenon WCX

This document contains information that is proprietary to MediaTek Inc.

Unauthorized reproduction or disclosure of this information in whole or in part is strictly prohibited.

01: 213us

10: 427us

11: 823us

830108D0h PMIC_VCORE_CON0 **PMIC_VCORE_CON0**

Bit	15	14	13	12	11	10	9	8	7	6	5	4	3	2	1	0
Name		VCORE_OC_FLAG(R)		CCI_VCORE_OC_AUTO_OFF		RG_VCORE_PDNMOS_EN		RG_VCORE_VOSEL					MUST BE 0	MUST BE 0		RG_VCORE_EN
Type		R		RW		RW		RW					RW	RW		RW
Reset		0		0		1		0					0	0		1

VCORE_OC_FLAG(R) Deglitched signal for VCORE_CL_STATUS

CCI_VCORE_OC_AUTO_OFF Automatically turn off VCORE LDO if VCORE_OC_FLAG

RG_VCORE_PDNMOS_EN VCORE POWER DOWN NMOS Enable
(1'b1: enable; 1'b0: disable)

RG_VCORE_VOSEL

RG_VCORE_VOSEL<4:0>	00000	00001	00010	00011	00100	00101	00110	10000
Vout	1.2V	1.225V	1.25V	1.275V	1.3V	1.325V	1.35V	0.8V
RG_VCORE_VOSEL<4:0>	10001	10010	10011	10100	10101	10110	10111	11000
Vout	0.825V	0.85V	0.875V	0.9V	0.925V	0.95V	0.975V	1V
RG_VCORE_VOSEL<4:0>	11001	11010	11011	11100	11101	11110	11111	
Vout	1.025V	1.05V	1.075V	1.1V	1.125V	1.15V	1.175V	

RG_VCORE_EN Vcore enable for testing
(1'b1: enable; 1'b0: disable)

(Note :RG_VCORE_EN=0 is only for test use.Vcore can't be disabled in system application.)

830108D4h PMIC_VCORE_CON1 **PMIC_VCORE_CON1**

Bit	15	14	13	12	11	10	9	8	7	6	5	4	3	2	1	0
Name								RG_VCORE_VOSEL_SLEEP								

MediaTek Confidential Release for Cenon WCX

This document contains information that is proprietary to MediaTek Inc.

Unauthorized reproduction or disclosure of this information in whole or in part is strictly prohibited.

Type								RW				
Reset								0				

RG_VCORE_VOSEL_SLEEP Sleep mode VOSEL

830108D8h PMIC_VCORE_CON2 **PMIC_VCORE_CON2**

Bit	15	14	13	12	11	10	9	8	7	6	5	4	3	2	1	0
Name									CCI_VCORE_STBTD		CCI_VCORE_OC_GEAR					
Type									RW		RW					
Reset									0		0					

CCI_VCORE_STBTD: Delay time for STB after VCORE_EN

00 : 213us

01: 427us

10: 610us

11: 823us

CCI_VCORE_OC_GEAR : VCORE OC Flag deglitch time

00 : 91us

01: 213us

10: 427us

11: 823us

830108E0h PMIC_LDOS_CON **PMIC_LDOS_CON**

Bit	15	14	13	12	11	10	9	8	7	6	5	4	3	2	1	0
Name									RG_LDOS_RESER							
Type									RW							
Reset									0							

RG_LDOS_RESER reserve for LDOS

830108F0h PMIC_INT_EN0 **PMIC_INT_EN0**

Bit	15	14	13	12	11	10	9	8	7	6	5	4	3	2	1	0

MediaTek Confidential Release for Cenon WCX

This document contains information that is proprietary to MediaTek Inc.

Unauthorized reproduction or disclosure of this information in whole or in part is strictly prohibited.

Name	CCI_VA_OC_INT_EN	CCI_VM_OC_INT_EN	CCI_VIO_OC_INT_EN	CCI_VRF_OC_INT_EN	CCI_VTCXO_OC_INT_EN				CCI_VCAMA_OC_INT_EN	CCI_VCAMD_OC_INT_EN	CCI_VUSB_OC_INT_EN		CCI_VSIM1_OC_INT_EN	CCI_VSIM2_OC_INT_EN	CCI_VIBR_OC_INT_EN	CCI_SPK_OC_INT_EN
Type	RW	RW	RW	RW	RW				RW	RW	RW		RW	RW	RW	RW
Reset	0	0	0	0	0				0	0	0		0	0	0	0

CCI_VA_OC_INT_EN Enable bit of VA over-current interrupt if the VA_OC_FLAG been asserted

CCI_VM_OC_INT_EN Enable bit of VM over-current interrupt if the VM_OC_FLAG been asserted

CCI_VIO_OC_INT_EN Enable bit of VIO over-current interrupt if the VIO_OC_FLAG been asserted

CCI_VRF_OC_INT_EN Enable bit of VRF over-current interrupt if the VRF_OC_FLAG been asserted

CCI_VTCXO_OC_INT_EN Enable bit of VTCXO over-current interrupt if the VTCXO_OC_FLAG been asserted

CCI_VCAMA_OC_INT_EN Enable bit of VCAMA over-current interrupt if the VCAMA_OC_FLAG been asserted

CCI_VCAMD_OC_INT_EN Enable bit of VCAMD over-current interrupt if the VCAMD_OC_FLAG been asserted

CCI_VUSB_OC_INT_EN Enable bit of VUSB over-current interrupt if the VUSB_OC_FLAG been asserted

CCI_VSIM1_OC_INT_EN Enable bit of VSIM1 over-current interrupt if the VSIM1_OC_FLAG been asserted

CCI_VSIM2_OC_INT_EN Enable bit of VSIM2 over-current interrupt if the VSIM2_OC_FLAG been asserted

CCI_VIBR_OC_INT_EN Enable bit of VIBR over-current interrupt if the VIBR_OC_FLAG been asserted

CCI_SPK_OC_INT_EN Enable bit of SPK over-current interrupt if the SPK_OC_FLAG been asserted

MediaTek Confidential Release for Cenon WCX
MediaTek Confidential Release for Cenon WCX

This document contains information that is proprietary to MediaTek Inc.

Unauthorized reproduction or disclosure of this information in whole or in part is strictly prohibited.

830108F4h PMIC_INT_EN1 **PMIC_INT_EN1**

Bit	15	14	13	12	11	10	9	8	7	6	5	4	3	2	1	0
Name				RG_BATON_UNDET2_INT_INV	RG_CHRDET_INT_INV	RG_BATON_UNDET_INT_INV	RG_CHRLDO_INT_INV	RG_CHROVP_INT_INV				RG_BATON_UNDET2_INT_EN	RG_CHRDET_INT_EN	RG_BATON_UNDET_INT_EN	RG_CHRLDO_INT_EN	RG_CHROVP_INT_EN
Type				RW	RW	RW	RW	RW				RW	RW	RW	RW	RW
Reset				0	0	0	0	0				0	0	0	0	0

RG_BATON_UNDET2_INT_INV Inverse polarity of interrupt BATON_UNDET2

RG_CHRDET_INT_INV Inverse polarity of interrupt CHRDET

RG_BATON_UNDET_INT_INV Inverse polarity of interrupt BATON_UNDET

RG_CHRLDO_INT_INV Inverse polarity of interrupt CHRLDO

RG_CHROVP_INT_INV Inverse polarity of interrupt CHROVP

RG_BATON_UNDET2_INT_EN Enable of interrupt BATON_UNDET2

RG_CHRDET_INT_EN Enable of interrupt CHRDET

RG_BATON_UNDET_INT_EN Enable of interrupt BATON_UNDET

RG_CHRLDO_INT_EN Enable of interrupt CHRLDO

RG_CHROVP_INT_EN Enable of interruptCHROVP

830108F8h PMIC_OC_STATUS **PMIC_OC_STATUS**

Bit	15	14	13	12	11	10	9	8	7	6	5	4	3	2	1	0
Name	VA_OC_STA	VM_OC_STA	VIO_OC_STA	VRF_OC_ST	VTCXO_OC_	VCORE_OC_	SPK_OC_P_S	SPK_OC_N_S	VCAMA_OC_	VCAMD_OC_	VUSB_OC_S		VSIM1_OC_STA	VSIM2_OC_STA	VIBR_OC	SPK_OC_STAT

MediaTek Confidential Release for Cenon WCX

This document contains information that is proprietary to MediaTek Inc.

Unauthorized reproduction or disclosure of this information in whole or in part is strictly prohibited.

	TUS	TUS	TUS	ATUS	STATUS	STATUS	TATUS	TATUS	STATUS	STATUS	TATUS		TUS	TUS	_STATUS	US
Type	R	R	R	R	R	R	R	R	R	R	R		R	R	R	R
Reset	0	0	0	0	0	0	0	0	0	0	0		0	0	0	0

VA_OC_STATUS VA over current flag

(1'b1: over current; 1'b0: no over current)

VM_OC_STATUS VM over current flag

(1'b1: over current; 1'b0: no over current)

VIO_OC_STATUS * VIO over current flag

(1'b1: over current; 1'b0: no over current)

VRF_OC_STATUS * VRF over current flag

(1'b1: over current; 1'b0: no over current)

VTCXO_OC_STATUS * VTCXO over current flag

(1'b1: over current; 1'b0: no over current)

VCORE_OC_STATUS VCORE over current flag

(1'b1: over current; 1'b0: no over current)

SPK_OCP_STATUS classAB PMOS over current flag

(1'b1: over current; 1'b0: no over current)

SPK_OCN_STATUS classAB NMOS over current flag

(1'b1: over current; 1'b0: no over current)

VCAMA_OC_STATUS * VCAMA over current flag

(1'b1: over current; 1'b0: no over current)

VCAMD_OC_STATUS * VCAMD over current flag

(1'b1: over current; 1'b0: no over current)

VUSB_OC_STATUS * VUSB over current flag

(1'b1: over current; 1'b0: no over current)

VSIM1_OC_STATUS * VSIM1 over current flag

(1'b1: over current; 1'b0: no over current)

VSIM2_OC_STATUS * VSIM2 over current flag

MediaTek Confidential Release for Cenon WCX
MediaTek Confidential Release for Cenon WCX

This document contains information that is proprietary to MediaTek Inc.

Unauthorized reproduction or disclosure of this information in whole or in part is strictly prohibited.

(1'b1: over current; 1'b0: no over current)

VIBR_OC_STATUS * VIBR over current flag

(1'b1: over current; 1'b0: no over current)

SPK_OC_STATUS classAB over current flog

(1'b1: over current; 1'b0: no over current)

830108FCh PMIC_OC_FLAG **PMIC_OC_FLAG**

Bit	15	14	13	12	11	10	9	8	7	6	5	4	3	2	1	0
Name	VA_OC_FLG	VM_OC_FLG	VIO_OC_FLG	VRF_OC_FLG	VTCXO_OC_FLG	VCORE_OC_FLG			VCAMA_OC_FLG	VCAMD_OC_FLG	VUSB_OC_FLG		VSIM1_OC_FLG	VSIM2_OC_FLG	VIBR_OC_FLG	SPK_OC_FLG
Type	RW	RW	RW	RW	RW	RW			RW	RW	RW		RW	RW	RW	RW
Reset	0	0	0	0	0	0			0	0	0		0	0	0	0

VA_OC_FLG R : Deglitched signal for VA_CL_STATUS

W: Clear VA_OC_FLG

VM_OC_FLG R : Deglitched signal for VM_CL_STATUS

W: Clear VM_OC_FLG

VIO_OC_FLG R: Deglitched signal for VIO_CL_STATUS

W: Clear VIO_OC_FLG

VRF_OC_FLG R: Deglitched signal for VRF_CL_STATUS

W: Clear VRF_OC_FLG

VTCXO_OC_FLG R: Deglitched signal for VTCXO_CL_STATUS

W: Clear VTCXO_OC_FLG

VCORE_OC_FLG R: Deglitched signal for VCORE_CL_STATUS

W: Clear VCORE_OC_FLG

VCAMA_OC_FLG R: Deglitched signal for VCAMA_CL_STATUS

MediaTek Confidential Release for Cenon WCX

This document contains information that is proprietary to MediaTek Inc.

Unauthorized reproduction or disclosure of this information in whole or in part is strictly prohibited.

W: Clear VCAMA_OC_FLG

VCAMD_OC_FLG R: Deglitched signal for VCAMD_CL_STATUS

W: Clear VCAMD_OC_FLG

VUSB_OC_FLG R: Deglitched signal for VUSB_CL_STATUS

W: Clear VUSB_OC_FLG

VSIM1_OC_FLG R: Deglitched signal for VSIM1_CL_STATUS

W: Clear VSIM1_OC_FLG

VSIM2_OC_FLG R: Deglitched signal for VSIM2_CL_STATUS

W: Clear VSIM2_OC_FLG

VIBR_OC_FLG R: Deglitched signal for VIBR_CL_STATUS

W: Clear VIBR_OC_FLG

SPK_OC_FLG R: Deglitched signal for SPK_OC_STATUS

W: Clear SPK_OC_FLG

83010900h **PMIC_STARTUP_CON0** **PMIC_STARTUP_CON0**

Bit	15	14	13	12	11	10	9	8	7	6	5	4	3	2	1	0
Name	PWRKEY_DEB(R)	PWRKEY_VCORE(R)	QI_TEST_MODE_POR(R)		PMU_THR_PWROFF(R)	QI_PMU_THR_STATUS(R)						RG_USBDL_EN	RG_THR_HWPDN_EN	RG_THERMAL_DIS	RG_THR_SEL	
Type	R	R	R		R	R						RW	RW	RW	RW	
Reset	0	0	0		0	0						1	0	0	0	

PWRKEY_DEB(R) Debounced PWRKEY signal

PWRKEY_VCORE(R) PWRKEY signal before debounced

QI_TEST_MODE_POR(R) Test mode por signal

PMU_THR_PWROFF(R) PMU thermal power-off Indicator

0 Normal operation

MediaTek Confidential Release for Cenon WCX

This document contains information that is proprietary to MediaTek Inc.

Unauthorized reproduction or disclosure of this information in whole or in part is strictly prohibited.

1 Power-off

QI_PMU_THR_STATUS(R) Startup monitor signal thermal status

RG_USBDL_EN Reserved (no used)

RG_THR_HWPDN_EN

0: Enable thermal hardware powerdown function
1: Disable thermal hardware powerdown function

RG_THERMAL_DIS Thermal shut-down disable control
0: enable thermal shutdown protection
1 : disable thermal shutdown protection

RG_THR_SEL Thermal shut-down threshold fine tuning (Internal use)
00 : Initial setting
01 : +10oC
10 : -20oC
11 : -10oC

83010904h PMIC_STARTUP_CON1 **PMIC_STARTUP_CON1**

Bit	15	14	13	12	11	10	9	8	7	6	5	4	3	2	1	0
Name		RG_BIAS_GEN_FORCE						RG_PMU_LEV_UNGATE			RG_RST_DRVSEL	RG_STRUP_TEST		RG_VREF_BG		
Type		RW						RW			RW	RW		RW		
Reset		0						0			0	0		0		

RG_BIAS_GEN_FORCE Force the IBIAS/VBIAS Generator ON in the Testmode
0 : Normal
1 : Force ON

RG_PMU_LEV_UNGATE Use to ungate PMU related level shifters, active high

0 : Gated
1 : Ungated

RG_RST_DRVSEL Reset pin output driving capability Selection
0: 7.5mA (default)
1: 15mA

RG_STRUP_TEST Startup macro test clock enable signal

MediaTek Confidential Release for Cenon WCX

This document contains information that is proprietary to MediaTek Inc.

Unauthorized reproduction or disclosure of this information in whole or in part is strictly prohibited.

0 : Normal clock source
1 : Test clock source to speedup FT

RG_VREF_BG Reference voltage fine tuning according to VBG

000 : initial setting
001 : minus 1 step
010 : minus 2 step
011 : minus 3 step
100 : plus 4 step
101 : plus 3 step
110 : plus 2 step
111 : plus 1 step

83010908h PMIC_STARTUP_CON2 **PMIC_STARTUP_CON2**

Bit	15	14	13	12	11	10	9	8	7	6	5	4	3	2	1	0
Name	QI_STRUP_FLAG_OUT(R)				QI_PMU_RSTB(R)	QI_PMU_DCXO26M_ON(R)	QI_PMU_DCXO26M_DLY	RG_THRDET_SEL	RG_TP_LED				RG_IBIAS_TRIM			
Type	R				R	R	R	RW	RW				RW			
Reset	0				0	0	0	0	0				0			

QI_STRUP_FLAG_OUT(R) Startup monitor siganls

QI_PMU_RSTB(R) System Reset Disable Signal

QI_PMU_DCXO26M_ON(R) enable signal for DCXO

QI_PMU_DCXO26M_DLY delayed enable signal for DCXO

RG_THRDET_SEL Thermal detection method:

1: 4-state polling (<110oC/110oC~130oC/110oC~150oC/>150oC)
0: 3-state hysteresis (<110oC/110oC~150oC/>150oC)

RG_TP_LED RG_TP_LED[3:0]: PMU test mode but need to set PAD_PMU_TESTMODE = VBAT

RG_TP_LED[2:0]	KP_LED	ISINK3	ISINK2	ISINK1	ISINK0
000	DISABLE STARTUP DEBUG MODE @ PMU_TESTMODE=1				

MediaTek Confidential Release for Cenon WCX

This document contains information that is proprietary to MediaTek Inc.

Unauthorized reproduction or disclosure of this information in whole or in part is strictly prohibited.

001	UVLO	DDLO	THERMAL	CHRDET	RTC_PWRBB
010	CLK75K	PWRKEY	PWRKEY_DEB	PWRON	BGR_READYB
011	DCXO26M_ON	DCXO26M_DLY	THR_STATUS[2]	THR_STATUS[1]	THR_STATUS[0]
100	VRF_PG_STATUS	VTCXO_PG_STATUS	VTHR_POL[2]	VTHR_POL[1]	VTHR_POL[0]
101	VCORE_PG_STATUS	VM_PG_STATUS	VIO_PG_STATUS	VA_PG_STATUS	GND
110	GND	GND	GND	GND	GND
111	GND	GND	GND	GND	GND

RG_TP_LED[3]: reserved

RG_IBIAS_TRIM V/I source bias triming

0000	+0%	1000	-50%
0001	+6.25%	1001	-43.75%
0010	+12.5%	1010	-37.5%
0011	+18.75%	1011	-31.25%
0100	+25%	1100	-25%
0101	+31.25%	1101	-18.75%
0110	+37.5%	1110	-12.5%
0111	+43.75%	1111	-6.25%

8301090Ch **PMIC_STARTUP_CON3** **PMIC_STARTUP_CON3**

Bit	15	14	13	12	11	10	9	8	7	6	5	4	3	2	1	0
Name	RG_IBI	RG_T	RG_SV	RG_STRUP_	RG_STRUP_FLAG_SE				RG_STRUP_RSV							

MediaTek Confidential Release for Cenon WCX

This document contains information that is proprietary to MediaTek Inc.

Unauthorized reproduction or disclosure of this information in whole or in part is strictly prohibited.

	AS_TRIM_EN	HR_TMODE	12_TMODE	FLAG_EN	L	
Type	RW	RW	RW	RW	RW	RW
Reset	0	0	0	0	0	0

RG_IBIAS_TRIM_EN Reserve (Not used)

RG_THR_TMODE

0: Disable thermal threshould input from KP_LED

1: Enalbe thermal threshould input from KP_LED

RG_SV12_TMODE Startup internal 1.2v capless LDO test mode

0: disable test mode
1 : enable test mode to output 1.2v to KP_LED

RG_STRUP_FLAG_EN

0: Disable startup digital macro flag output function
1: Enable startup digital macro flag output function

RG_STRUP_FLAG_SEL Startup digital macro flag output selection control

RG_STRUP_FLAG_SEL[3:0]	STRUP_FLAG_OUT[3]	STRUP_FLAG_OUT[2]	STRUP_FLAG_OUT[1]	STRUP_FLAG_OUT[0]
0	PMU_DDLO	uvlo_deb	chrdet_deb	pmu_thr_pwroff
1	RTC_PWRBB	PMU_PWRKEY_DEB	PMU_PWRKEY	PMU_UVLO
2	mon_pmu_ck75k_pre	mon_pmu_ck75k	mon_pmu_ck256us	mon_pmu_ck1ms
3	PMU_TEST_CK	PCHR_CHRDET	0	0
4	vcore_pg_deb	vio18_pg_deb	va_pg_deb	0
5	PMU_DCXO26M_ON	PMU_DCXO26M_DLY	0	PMU_PWRON
6	PMU_THERMAL	PMU_THR_STATUS[2]	PMU_THR_STATUS[1]	PMU_THR_STATUS[0]
7	0	VTHR_POL[2]	VTHR_POL[1]	VTHR_POL[0]
8	0	vio28_pg_deb	vtcxo_pg_deb	vrf_pg_deb
9	0	0	0	0
10	VUSB_STB	VRF_STB	VTCXO_STB	VCORE_STB
11	VIO18_STB	VIO28_STB	VA_STB	0
12	PMU_TESTMODE	VCORE_PG_STATUS	VIO18_PG_STATUS	VIO28_PG_STATUS
13	VA_PG_STATUS	VRF_PG_STATUS	VTCXO_PG_STATUS	0
14	0	0	0	0
15	0	0	0	0

RG_STRUP_RSV Reserved

83010980h PMIC_ISINK0_CON0 **PMIC_ISINK0_CON0**

Bit	15	14	13	12	11	10	9	8	7	6	5	4	3	2	1	0
Name										RG_ISINK0_STEP					RG_ISINK0_MOD	RG_ISINK0_E

This document contains information that is proprietary to MediaTek Inc.

Unauthorized reproduction or disclosure of this information in whole or in part is strictly prohibited.

MediaTek Confidential Release for Cenon WCX

														E	N
Type										RW				RW	RW
Reset										0				0	0

RG_ISINK0_STEP Coarse 6 step current level for ISINK CH0, 000:4mA ~ 101:24mA, 4mA per step

RG_ISINK0_STEP[2:0]	000	001	010	011	100	101	110	111
ISINK0 current (mA)	4	8	12	16	20	24	-	-

RG_ISINK0_MODE ISINK0 PWM MODE SEL

1 : Register control mode (see the RG_ISINK0_EN to turn-on)

0 : PWM mode, (controlled by PWM3)

RG_ISINK0_EN Turn on ISINK Channel 0

83010984h **PMIC_ISINK0_CON1** **PMIC_ISINK0_CON1**

Bit	15	14	13	12	11	10	9	8	7	6	5	4	3	2	1	0
Name				RG_ISINKS_VREF_CAL												
Type				RW												
Reset				0												

RG_ISINKS_VREF_CAL Fine Tune reference voltage level for ISINK (0.0675V~0.13V,default [00000]=0.1V).

2.5mV per step.

VREF_CAL[4:0]	00000	00001	00010	00011	00100	00101	00110	00111	01000	01001	01010	01011	01100
Vref (mV)	100.0	102.5	105.0	107.5	110.0	112.5	115.0	117.5	120.0	122.5	125.0	127.5	130.0
VREF_CAL[4:0]	10011	10100	10101	10110	10111	11000	11001	11010	11011	11100	11101	11110	11111
Vref (mV)	67.5	70.0	72.5	75.0	77.5	80.0	82.5	85.0	87.5	90.0	92.5	95.0	97.5

83010988h **PMIC_ISINK0_CON2** **PMIC_ISINK0_CON2**

Bit	15	14	13	12	11	10	9	8	7	6	5	4	3	2	1	0
Name													RG_ISINKS_RSV			
Type													RW			
Reset													0			

RG_ISINKS_RSV

MediaTek Confidential Release for Cenon WCX

This document contains information that is proprietary to MediaTek Inc.

Unauthorized reproduction or disclosure of this information in whole or in part is strictly prohibited.

RG_ISINKS_RSV[0] : current trimming enable
0: normal operation, 1: bias trimming enable

RG_ISINKS_RSV[2:1] : Reserved register for future use

RG_ISINKS_RSV[3] : ClassAB dis shoot through enable

0: enable dis shoot through, 1: normal operation

83010990h **PMIC_ISINK1_CON0** **PMIC_ISINK1_CON0**

Bit	15	14	13	12	11	10	9	8	7	6	5	4	3	2	1	0
Name										RG_ISINK1_STEP					RG_ISINK1_MODE	RG_ISINK1_EN
Type										RW					RW	RW
Reset										0					0	0

RG_ISINK1_STEP Coarse 6 step current level for ISINK CH1, 000:4mA ~ 101:24mA, 4mA per step

RG_ISINK1_STEP[2:0]	000	001	010	011	100	101	110	111
ISINK1 current (mA)	4	8	12	16	20	24	-	-

RG_ISINK1_MODE ISINK1 PWM MODE SEL

1 : Register control mode (see the RG_ISINK1_EN to turn-on)

0 : PWM mode, (controlled by PWM3)

RG_ISINK1_EN Turn on ISINK Channel 1

830109A0h **PMIC_ISINK2_CON0** **PMIC_ISINK2_CON0**

Bit	15	14	13	12	11	10	9	8	7	6	5	4	3	2	1	0
Name										RG_ISINK2_STEP					RG_ISINK2_MODE	RG_ISINK2_EN
Type										RW					RW	RW
Reset										0					0	0

RG_ISINK2_STEP Coarse 6 step current level for ISINK CH2, 000:4mA ~ 101:24mA, 4mA per step

RG_ISINK2_STEP[2:0]	000	001	010	011	100	101	110	111
ISINK2 current (mA)	4	8	12	16	20	24	-	-

RG_ISINK2_MODE ISINK2 PWM MODE SEL

MediaTek Confidential Release for Cenon WCX

This document contains information that is proprietary to MediaTek Inc.

Unauthorized reproduction or disclosure of this information in whole or in part is strictly prohibited.

1 : Register control mode (see the RG_ISINK2_EN to turn-on)

0 : PWM mode, (controlled by PWM3)

RG_ISINK2_EN Turn on ISINK Channel 2

830109B0h **PMIC_ISINK3_CON0** **PMIC_ISINK3_CON0**

Bit	15	14	13	12	11	10	9	8	7	6	5	4	3	2	1	0
Name										RG_ISINK3_STEP					RG_ISINK3_MODE	RG_ISINK3_EN
Type										RW					RW	RW
Reset										0					0	0

RG_ISINK3_STEP Coarse 6 step current level for ISINK CH3, 000:4mA ~ 101:24mA, 4mA per step

RG_ISINK3_STEP[2:0]	000	001	010	011	100	101	110	111
ISINK3 current (mA)	4	8	12	16	20	24	-	-

RG_ISINK3_MODE ISINK3 PWM MODE SEL

1 : Register control mode (see the RG_ISINK3_EN to turn-on)

0 : PWM mode, (controlled by PWM3)

RG_ISINK3_EN Turn on ISINK Channel 3

830109C0h **PMIC_KPLED_CON0** **PMIC_KPLED_CON0**

Bit	15	14	13	12	11	10	9	8	7	6	5	4	3	2	1	0
Name						MUST BE 0	MUST BE 0			RG_KPLED_SEL					RG_KPLED_MODE	RG_KPLED_EN
Type						RW	RW			RW					RW	RW
Reset						0	0			0					0	0

RG_KPLED_SEL 3 bits for KPLED current adjustment. 8 steps in total. The minimal current should be no less than 60mA at <111> step.

RG_KPLED_SEL[2:0]	000	001	010	011	100	101	110	111
KPLED current	1X	2X	3X	4X	5X	6X	7X	8X

RG_KPLED_MODE KPLED enable mode select

MediaTek Confidential Release for Cenon WCX

This document contains information that is proprietary to MediaTek Inc.

Unauthorized reproduction or disclosure of this information in whole or in part is strictly prohibited.

0 pwm mode, controlled by hardware **PWM1** output signal

1 Register control mode (see the KPLED_EN to turn-on)

RG_KPLED_EN Turn on KeyPAD

830109D0h **PMIC_CLASSAB_CON0** **PMIC_CLASSAB_CON0**

Bit	15	14	13	12	11	10	9	8	7	6	5	4	3	2	1	0
Name			RG_SPK_MINUS_GAIN		RG_SPK_IN_FLOAT_B	RG_SPK_IN_TIE_HIGH	RG_SPK_TESTIN_SEL	RG_SPK_OBIAS		RG_SPK_OC_EN	RG_SPK_OUT_FLOAT_B	RG_SPK_VOL				RG_SPK_EN
Type			RW		RW	RW	RW	RW		RW	RW	RW				RW
Reset			0		0	0	0	0		0	0	0				0

RG_SPK_MINUS_GAIN class AB minus gain enable

00: disable

01: -3dB gain

1011 -6dB gain

RG_SPK_IN_FLOAT_B Let OP's input floating when inactive

0 : input floating
1 : input may be tied H/L

RG_SPK_IN_TIE_HIGH Let OP's input tied to high when inactive(functional when RG_SPK_IN_FLOAT_B=1)

0 : input tie to H
1 : input tie to L

RG_SPK_TESTIN_SEL Input source select

0 : normal path
1 : test path

RG_SPK_OBIAS class AB mode output stage bias current select

00: 6mA

MediaTek Confidential Release for Cenon WCX

This document contains information that is proprietary to MediaTek Inc.

Unauthorized reproduction or disclosure of this information in whole or in part is strictly prohibited.

01: 9mA
10:12mA
11:15mA

RG_SPK_OC_EN class AB mode Over-current protection enable

0:disable
1:enable

RG_SPK_OUT_FLOAT_B class AB mode Output floating during power down

0:output floating
1:not floating, tie H

RG_SPK_VOL class AB volume control 1.5dB/step

RG_SPK_VOL[3:0]	Gain [dB]	RG_SPK_VOL[3:0]	Gain [dB]	RG_SPK_VOL[3:0]	Gain [dB]	RG_SPK_VOL[3:0]	Gain [dB]
0000	0	0100	6	1000	12	1100	18
0001	1.5	0101	7.5	1001	13.5	1101	19.5
0010	3	0110	9	1010	15	1110	21
0011	4.5	0111	10.5	1011	16.5	1111	22.5

RG_SPK_EN SPKDRV Powering Up/Down Control

0:Disable
1:Enable

830109D4h **PMIC_CLASSAB_CON1** **PMIC_CLASSAB_CON1**

Bit	15	14	13	12	11	10	9	8	7	6	5	4	3	2	1	0
Name	SPK_OC_FLAG (R)									CCI_SPK_OC_AUTO_OFF			SPK_OC_WND		SPK_OC_TRG	
Type	R									RW			RW		RW	
Reset	0									0			0		0	

SPK_OC_FLAG The flag informs some SPK over current status have been asserted.

0 no over current status

MediaTek Confidential Release for Cenon WCX

This document contains information that is proprietary to MediaTek Inc.

Unauthorized reproduction or disclosure of this information in whole or in part is strictly prohibited.

1 some over current status

CCI_SPK_OC_AUTOFF Enable to power-off the SPK automatically if the SPK_OC_FLAG been asserted.

0 disable

1 enable

SPK_OC_WND Decision window setting for SPK over current status.

0 16uS

1 32uS

2 64uS

3 128uS

SPK_OC_TRG Threshold setting in the decision window for SPK over current status.

0 4/8

1 3/8

2 2/8

3 1/8

83010A00h **PMIC_CHR_CON0** **PMIC_CHR_CON0**

Bit	15	14	13	12	11	10	9	8	7	6	5	4	3	2	1	0
Name	VCDT_HV_DET(R)	VCDT_LV_DET(R)	CHRDET(R)	CHR_EN	CSDAC_EN	PCHR_AUTO	CHR_LDO_DET	VCDT_HV_EN	VCDT_HV_VTH				VCDT_LV_VTH			
Type	R	R	R	RW	RW	RW	R	RW	RW				RW			
Reset	0	0	0	0	0	0	0	0	1011				10			

VCDT_HV_DET(R) ChargerIn high threshould detection (1: > vth, 0 < vth)

VCDT_LV_DET(R) ChargerIn low threshould detection (1: > vth, 0 < vth)

CHRDET(R) Charger detection output (1: detected, 0: not detected)

CHR_EN Enable current DAC & charger auto charing control

CSDAC_EN Current DAC driver enable

PCHR_AUTO Charger auto charging control

CHR_LDO_DET Charger LDO detection (1: detected, 0: not detected)

VCDT_HV_EN ChargerIn detection high threshold enable

MediaTek Confidential Release for Cenon WCX

This document contains information that is proprietary to MediaTek Inc.

Unauthorized reproduction or disclosure of this information in whole or in part is strictly prohibited.

VCDT_HV_VTH ChargerIn detection high threshold

0000:4.2V / 0001:4.25V / 0010:4.30V / 0011:4.35V / 0100:4.40V / 0101:4.45V / 0110:4.50V / 0111:4.55V

1000:4.60V / 1001:6.00V / 1010:6.50V / 1011:7.00V / 1100:7.50V / 1101:8.50V / 1110:9.50V / 1111:10.0V /

VCDT_LV_VTH ChargerIn detection low threshold

0000:4.2V / 0001:4.25V / 0010:4.30V / 0011:4.35V / 0100:4.40V / 0101:4.45V / 0110:4.50V / 0111:4.55V

1000:4.60V / 1001:6.00V / 1010:6.50V / 1011:7.00V / 1100:7.50V / 1101:8.50V / 1110:9.50V / 1111:10.0V /

83010A04h **PMIC_CHR_CON1** **PMIC_CHR_CON1**

Bit	15	14	13	12	11	10	9	8	7	6	5	4	3	2	1	0
Name	VBAT_CC_DET(R)	VBAT_CV_DET(R)					VBAT_CC_EN	VBAT_CV_EN	VBAT_CC_VTH			VBAT_CV_VTH				
Type	R	R					RW	RW	RW			RW				
Reset	0	0					1	0	10			0				

VBAT_CC_DET(R) Battery CC-voltage detection output (1: > vth, 0 < vth)

VBAT_CV_DET(R) Battery CV-voltage detection output (1: > vth, 0 < vth)

VBAT_CC_EN Battery CC detection enable

VBAT_CV_EN Battery CV detection enable

VBAT_CC_VTH Battery CC detection threshold

00: 3.250V

01: 3.275V

10: 3.300V

11: 3.325V

VBAT_CV_VTH Battery CV detection threshold

00000:4.000V ; 00001:4.0125 ; 00010:4.0250V ; 00011:4.0375 ; 00100:4.0500V ; 00101:4.0625 ;

MediaTek Confidential Release for Cenon WCX

This document contains information that is proprietary to MediaTek Inc.

Unauthorized reproduction or disclosure of this information in whole or in part is strictly prohibited.

00110:4.0675V ; 00111:4.0875 ; 01000:4.1000V ; 01001:4.1125 ; 01010:4.1250V ; 01011:4.1375 ; 01100:4.1500V ; 01101:4.1625 ; 01110:4.1750V ; 01111:4.1875 ; 1X000:4.2000V ; 1X001:4.2125 ; 1X010:4.2250V ; 1X011:4.2375 ; 1X100:4.2500V ; 1X101:4.2625 ; 1X110:4.2750V ; 1X111:4.2875 ; 11111:2.2000V ;

83010A08h PMIC_CHR_CON2 **PMIC_CHR_CON2**

Bit	15	14	13	12	11	10	9	8	7	6	5	4	3	2	1	0
Name	CS_DET(R)			CS_EN		CS_VTH				TOLTC				TOHTC		
Type	R			RW		RW				RW				RW		
Reset	0			0		111				0				0		

CS_DET(R) Current sense comparator output (1: > Vth, 0 < Vth)

CS_EN Current sense enable

CS_VTH Current sense threshold.

000: 800mA ; 001:700mA ; 010:650mA ; 011:550mA ; 100:450mA ; 101:400mA ; 110:200mA ; 111:70mA

TOLTC Charger control cycles for driving low

TOHTC Charger control cycles for driving high

83010A0Ch PMIC_CHR_CON3 **PMIC_CHR_CON3**

Bit	15	14	13	12	11	10	9	8	7	6	5	4	3	2	1	0
Name	BATON_UNDET(R)	VBAT_OV_DET(R)			VBAT_OV_DEG	BATON_HT_EN	BATON_EN	VBAT_OV_EN	VBAT_OV_VTH		CSDAC_DLY				CSDAC_STP	
Type	R	R			RW	RW	RW	RW	RW		RW				RW	
Reset	0	0			0	0	1	1	1		11				1	

BATON_UNDET(R) Battery-On undetected (1: not detected, 0: detected)

VBAT_OV_DET(R) Battery over-voltage detection output (1: > vth, 0 < vth)

VBAT_OV_DEG Battery over-voltag deglitch (1: enable, 0: disable)

MediaTek Confidential Release for Cenon WCX

This document contains information that is proprietary to MediaTek Inc.

Unauthorized reproduction or disclosure of this information in whole or in part is strictly prohibited.

BATON_HT_EN Battery-On high temperature detection (1: enable, 0: disable)

BATON_EN Battery-On detection for drving protection (1: enable, 0: disable)

VBAT_OV_EN Battery over-voltag for driving protection (1: enable, 0: disable)

VBAT_OV_VTH Battery over-voltag detection threshold

OV_VTH_H: 00:4.325V ; 01:4.350V ; 10: 4.375V ; 11:4.1150V

OV_VTH_L: 00:4.275V ; 01:4.300V ; 10: 4.325V ; 11:4.0400V (Hysteresis)

CSDAC_DLY Current DAC output step timer

CSDAC_STP Current DAC output step

83010A10h **PMIC_CHR_CON4** **PMIC_CHR_CON4**

Bit	15	14	13	12	11	10	9	8	7	6	5	4	3	2	1	0
Name	CSDAC_DAT													PCHR_RST	CSDAC_TEST	PCHR_TEST
Type	RW													RW	RW	RW
Reset	0													0	0	0

CSDAC_DAT Current DAC driver data

PCHR_RST Charger control reset

CSDAC_TEST Current DAC driver test mode

PCHR_TEST Charger control test mode

83010A14h **PMIC_CHR_CON5** **PMIC_CHR_CON5**

Bit	15	14	13	12	11	10	9	8	7	6	5	4	3	2	1	0
Name	OTG_BVALID(R)			OTG_BVALID_EN					PCHR_FLAG_EN							
Type	R			RW					RW							
Reset	0			0					0							

OTG_BVALID(R) OTG BValid detected (1: detected, 0: not detected)

MediaTek Confidential Release for Cenon WCX

This document contains information that is proprietary to MediaTek Inc.

Unauthorized reproduction or disclosure of this information in whole or in part is strictly prohibited.

MediaTek Confidential Release for Cenon WCX

OTG_BVALID_EN OTG BValid detection enable (1: enable, 0: disable)

PCHR_FLAG_EN Charger control debug_flag_en

83010A18h PMIC_CHR_CON6 **PMIC_CHR_CON6**

Bit	15	14	13	12	11	10	9	8	7	6	5	4	3	2	1	0
Name												CHRWDT_EN	CHRWDT_TD			
Type												RW	RW			
Reset												1	0			

CHRWDT_EN Charger control watchdog enable

CHRWDT_TD Charger control watchdog delay

83010A1Ch PMIC_CHR_CON7 **PMIC_CHR_CON7**

Bit	15	14	13	12	11	10	9	8	7	6	5	4	3	2	1	0
Name	CHRWDT_OUT														CHRWDT_FLAG	CHRWDT_INT_EN
Type	R														R	RW
Reset	0														0	0

CHRWDT_OUT Charger watchdog output

CHRWDT_FLAG Charger watchdog flag

CHRWDT_INT_EN Charger watchdog interrupt enable

83010A20h PMIC_CHR_CON8 **PMIC_CHR_CON8**

Bit	15	14	13	12	11	10	9	8	7	6	5	4	3	2	1	0
Name		ADCIN_VCHR_EN	ADCIN_VSEN_EN	ADCIN_VBAT_EN	USBDL_SET	USBDL_RST	UVLO_VTHL				BGR_UNCHOP	BGR_UNCHOP_PH		BGR_RSEL		
Type		RW	RW	RW	RW	RW	RW				RW	RW		RW		
Reset		0	0	0	0	0	0				0	0		0		

ADCIN_VCHR_EN AUXADC input source enable for CHR (1: enable, 0: disable)

ADCIN_VSEN_EN AUXADC input source enable for VSEN (1: enable, 0: disable)

© 2011 MediaTek Inc.

This document contains information that is proprietary to MediaTek Inc.

Unauthorized reproduction or disclosure of this information in whole or in part is strictly prohibited.

ADCIN_VBAT_EN AUXADC input source enable for VBAT (1: enable, 0: disable)

USBDL_SET USBDL model set

USBDL_RST USBDL model reset

UVLO_VTHL UVLO low threshold selection

00:2.5V ; 01:2.6V ; 10:2.75V ; 11:2.9V

BGR_UNCHOP BGR unchop mode (1: unchop, 0: chop)

BGR_UNCHOP_PH BGR unchop mode phase selection

BGR_RSEL BGR resistor selection

83010A24h **PMIC_CHR_CON9** **PMIC_CHR_CON9**

Bit	15	14	13	12	11	10	9	8	7	6	5	4	3	2	1	0
Name	RGS_BC11_CMP_OUT(R)				RG_BC11_VSRC_EN		BC11_RST	BC11_BB_CTRL	BC11_BIAS_EN	BC11_IPU_EN		BC11_IPD_EN		BC11_CMP_EN		BC11_VREF_VTH
Type	R				RW		RW	RW	RW	RW		RW		RW		RW
Reset	0				0		0	0	0	0		0		0		0

RGS_BC11_CMP_OUT(R) BC1.1 comparator output logical signal stored and can be monitored.

RG_BC11_VSRC_EN BB to CGR-BC1.1 signal, Enable bits of Voltage buffer of USB_DP,USB_DM.

BC11_RST BC 1.1 control reset signal (rising edge).

BC11_BB_CTRL BB to CGR-BC1.1 signal. The control bit enable the BC1.1 circuit control from BB.

BC11_BIAS_EN BB to CGR-BC1.1 signal. The bit is to enable the bias circuits of BC1.1 circuit. 0:disable/1:enable.

BC11_IPU_EN BB to CGR-BC1.1 signal.

The bit is to enable the IPU10u current source of BC1.1 circuit. 0:disable/1:enable.

BC11_IPD_EN BB to CGR-BC1.1 signal.

The bit is to enable the IPD100u current source of BC1.1 circuit. 0:disable /1:enable.

MediaTek Confidential Release for Cenon WCX

This document contains information that is proprietary to MediaTek Inc.

Unauthorized reproduction or disclosure of this information in whole or in part is strictly prohibited.

BC11_CMP_EN BB to CGR-BC1.1 signal.

The bit is to enable the comparator circuit of BC1.1 circuit. 0:disable /1:enable.

BC11_VREF_VTH BB to CGR-BC1.1 signal

The bit is to select the threshold voltage of BC1.1 comparator input. 0:0.330V / 1:1.146V.

83010A28h PMIC_CHR_CON10 **PMIC_CHR_CON10**

Bit	15	14	13	12	11	10	9	8	7	6	5	4	3	2	1	0
Name	RESERVED															
Type	RW															
Reset	0															

RESERVED Reserved, do not write anything to this register

83010A2Ch PMIC_CHR_CON11 **PMIC_CHR_CON11**

Bit	15	14	13	12	11	10	9	8	7	6	5	4	3	2	1	0
Name	PCHR_FLAG_OUT(R)								PCHR_FLAG_SEL							
Type	R								RW							
Reset	0								0							

PCHR_FLAG_OUT(R) Charger digital controller internal state flags

PCHR_FLAG_SEL Charger control debug flag signal selection. Note: PCHR_FLAG_EN should be enabled

MediaTek Confidential Release for Cenon WCX

This document contains information that is proprietary to MediaTek Inc.

Unauthorized reproduction or disclosure of this information in whole or in part is strictly prohibited.

PCHR_FLAG_SEL	MON[3]	MON[2]	MON[1]	MON[0]
5'h00	QI_CS_DET	QI_VBAT_CV_DET	QI_VBAT_CC_DET	QI_VCDT_DET
5'h01	QI_DDLO_DET	QI_UVLO_DET	QI_BATON_UNDET	QI_VBAT_OV_DET
5'h02	CHRWDT_OUT	PCHR_STATE[2]	PCHR_STATE[1]	PCHR_STATE[0]
5'h03	QI_DRV_EN	SFSTR_EN	SFSTR_STATE[1]	SFSTR_STATE[0]
5'h04	BBCTL_FLAG	VBAT_CC_FLAG	VCDT_HV_FLAG	VCDT_LV_FLAG
5'h05	QI_CS_EN	QI_VCDT_EN	QI_VBAT_CV_EN	QI_VBAT_CC_EN
5'h06	DDLO_DEB	UVLO_DEB	BATON_UNDET_DEB	VBAT_OV_DEB
5'h07	1'b0	RGS_USBDL_MODE	QI_USBDL_MODE	USBDL_4scnt_out
5'h08	PCHR_RSTB	PCHR_CK1MS	PCHR_CK1US	PCHR_CK16US
5'h09	DDLO_CALI_DAT[3]	DDLO_CALI_DAT[2]	DDLO_CALI_DAT[1]	DDLO_CALI_DAT[0]
5'h0A	QI_DRV_D[7]	QI_DRV_D[6]	QI_DRV_D[5]	QI_DRV_D[4]
5'h0B	QI_DRV_D[3]	QI_DRV_D[2]	QI_DRV_D[1]	QI_DRV_D[0]
5'h0C	QI_VBAT_CV_VTH[4]	QI_CS_VTH[2]	QI_CS_VTH[1]	QI_CS_VTH[0]
5'h0D	QI_VBAT_CV_VTH[3]	QI_VBAT_CV_VTH[2]	QI_VBAT_CV_VTH[1]	QI_VBAT_CV_VTH[0]
5'h0E	DDLO_CALI_OK	VBAT_CV_FLAG	QI_VBAT_CC_VTH[1]	QI_VBAT_CC_VTH[0]
5'h0F	QI_VCDT_VTH[3]	QI_VCDT_VTH[2]	QI_VCDT_VTH[1]	QI_VCDT_VTH[0]
5'h10	mon_pchr_ckrtc	mon_bc11_rtc_ck1sec	bc11_rtc_rpen	bc11_rtc_timeout
5'h11	bc11_500ms_rpen	bc11_500ms_timeout	bc11_1M_rpen	bc11_1M_timeout
5'h12	v22_deb	bc11_rpen	bc11_charger_det	bc11_det_finish
5'h13	pchr_bc11_bias_en	pchr_bc11_vref_vth	usbldo_force_en	csdac_isusp
5'h14	pchr_bc11_ipd_en[1]	pchr_bc11_ipd_en[0]	pchr_bc11_ipu_en[1]	pchr_bc11_ipu_en[0]
5'h15	pchr_bc11_vsrc_en[1]	pchr_bc11_vsrc_en[0]	pchr_bc11_cmp_en[1]	pchr_bc11_cmp_en[0]
5'h16	bc11_rstb	mon_bc11_ck1us	dead_lat	QI_PCHR_BC11_CMP_OUT
5'h17	bc11_cnt[10]	bc11_cnt[9]	bc11_cnt[3]	bc11_cnt[2]
5'h18	bc11_500ms_rpcnt[9]	bc11_500ms_rpcnt[8]	bc11_500ms_rpcnt[1]	bc11_500ms_rpcnt[0]
5'h19	bc11_1024ms_rpcnt[9]	bc11_1024ms_rpcnt[8]	bc11_1024ms_rpcnt[1]	bc11_1024ms_rpcnt[0]
5'h1A	bc11_720sec_rpcnt[9]	bc11_720sec_rpcnt[8]	bc11_720sec_rpcnt[1]	bc11_720sec_rpcnt[0]
5'h1B	bc11_rtc_32768_rpcnt[14]	bc11_rtc_32768_rpcnt[13]	bc11_rtc_32768_rpcnt[1]	bc11_rtc_32768_rpcnt[0]
5'h1C	bc11_rtc_1500sec_rpcnt[10]	bc11_rtc_1500sec_rpcnt[9]	bc11_rtc_1500sec_rpcnt[1]	bc11_rtc_1500sec_rpcnt[0]
5'h1D	bc11_state[7]	bc11_state[6]	bc11_state[5]	bc11_state[4]
5'h1E	bc11_state[3]	bc11_state[2]	bc11_state[1]	bc11_state[0]
5'h1F	bc11_512ms_timeout	detect_stop	1'b1	1'b0

83010A30h **PMIC_CHR_CON12** **PMIC_CHR_CON12**

Bit	15	14	13	12	11	10	9	8	7	6	5	4	3	2	1	0
Name	BAT												PCHR_FT_CTRL			

MediaTek Confidential Release for Cenon WOX

This document contains information that is proprietary to MediaTek Inc.

Unauthorized reproduction or disclosure of this information in whole or in part is strictly prohibited.

	ON_UNDET2(R)												
Type	R											RW	
Reset	0											0	

BATON_UNDET2(R) Reserved read only bit of battery-on detection function.

PCHR_FT_CTRL Charger FT mode control bits

bit 2 extend the charger detection duration 10ms
bit 1 speed up detection, force TOH/TOL = 3ms/1ms
bit 0 always turn on charger detection (VCDT)

83010A34h PMIC_CHR_CON13 **PMIC_CHR_CON13**

Bit	15	14	13	12	11	10	9	8	7	6	5	4	3	2	1	0
Name	PCHR_TRIMDATA1(R)				PCHR_TRIMDATA0(R)				-				-			
Type	R				R				-				-			
Reset	0				0				0				0			

PCHR_TRIMDATA1(R) Reserved read only of trimmed data.

PCHR_TRIMDATA0(R) Reserved read only of trimmed data.

83010A40h PMIC_CHR_CON16 **PMIC_CHR_CON16**

Bit	15	14	13	12	11	10	9	8	7	6	5	4	3	2	1	0
Name			RG_DRV_ITUNE		RG_OVP_TRIM				RG_PCHR_RV							
Type			RW		RW				RW							
Reset			1		1000				0							

RG_DRV_ITUNE : IDAC 1LSB current resolution option. 00:1X , 01:0.5X, 10:0.5X, 11:1/3X

RG_OVP_TRIM[3:0] : 4bit OV trimming level selection. These registers mapping can calibrate -3.5%~4% error.

RG_PCHR_RV Reserved for pchr

MediaTek Confidential Release for Cenon WCX

This document contains information that is proprietary to MediaTek Inc.

Unauthorized reproduction or disclosure of this information in whole or in part is strictly prohibited.

83010F00h **FMTR_CON0** **FMTR_CON0**

Bit	15	14	13	12	11	10	9	8	7	6	5	4	3	2	1	0
Name	FQMTR_EN	FQMTR_RST					FQMTR_WINSET									
Type	RW	RW					RW									
Reset	0	0					0									

FQMTR_EN Frequency-meter enable control signal

0 disable

1 enable

FQMTR_RST Frequency-meter reset control signal

0 normal operation

1 reset

FQMTR_WINSET Frequency-meter measurement window setting (= numbers of FIXED clock cycles)

83010F04h **FMTR_CON1** **FMTR_CON1**

Bit	15	14	13	12	11	10	9	8	7	6	5	4	3	2	1	0
Name												FQMTR_FCKSEL	FQMTR_TCKSEL			
Type												RW	RW			
Reset												0	0			

FQMTR_FCKSEL Frequency-meter FIXED clock selection

0 CLKSQ 13MHz clock

1 RTC XOSC 32KHz clock

FQMTR_TCKSEL Frequency-meter TESTED clock selection

0 idle

1 CLKSQ 26MHz clock

2 MPLL clock

3 UPLL 104M clock

4 USB PHY 30MHz clock

5 SPLL clock

6 UPLL 78M cock

7 RTC XOSC 32KHz clock

8 USB clock

9 48M clock

MediaTek Confidential Release for Cenon WCX

This document contains information that is proprietary to MediaTek Inc.

Unauthorized reproduction or disclosure of this information in whole or in part is strictly prohibited.

10~15 reserved

83010F08h **FMTR_DATA** **FMTR_DATA**

Bit	15	14	13	12	11	10	9	8	7	6	5	4	3	2	1	0
Name	FQMTR_BUSY				FQMTR_DATA											
Type	R				R											
Reset	0				0											

Set this register for Frequency-Meter Data registers.

FQMTR_BUSY Frequency-meter busy status

0 FQMTR is ready

1 FQMTR is busy

FQMTR_DATA Frequency-meter measurement data

**** Frequency(TESTED clock) = Frequency(FIXED clock) * FQMTR_DATA[11:0]/FQMTR_WINSET[9:0]

83010F10h **MIXEDSYS_MON_CON0** **MIXEDSYS_MON_CON0**

Bit	15	14	13	12	11	10	9	8	7	6	5	4	3	2	1	0
Name									MIXEDSYS_MON_CFG			MIXEDSYS_MON_SEL				
Type									RW			RW				
Reset									0			1Fh				

MIXEDSYS_MON_CFG monitor flags output mode select

0 Normal monitor signals output mode

1 MCU programmable debug mode (output MIXEDSYS_MON_OUT[7:0])

MIXEDSYS_MON_SEL monitor flags output select

X	MON[7]	MON[6]	MON[5]	MON[4]
00	0	0	0	MON_ESDM_CK
01	0	0	0	0
02	DA_AYDL[7]	DA_AYDL[6]	DA_AYDL[5]	DA_AYDL[4]
03	DA_AYDR[7]	DA_AYDR[6]	DA_AYDR[5]	DA_AYDR[4]
04	0	0	QI_EDGERFRX_PWDB	0
05	0	0	0	0

MediaTek Confidential Release for Cenon WCX

This document contains information that is proprietary to MediaTek Inc.

Unauthorized reproduction or disclosure of this information in whole or in part is strictly prohibited.

06	0	0	0	VBAT_OV_DET_TMUX
07	0	0	AUX_COMP_TMUX	AUX_PENIRQ_TMUX
08	0	0	RG_PCHR_AUTOMODE	NI_PCHR_TEST_CK
09	0	0	OTG_BVALID_TMUX	RG_CSDAC_EN
10	DA_APC_BUS[7]	DA_APC_BUS[6]	DA_APC_BUS[5]	DA_APC_BUS[4]
11	AUX_ST	AUX_CS_B	AUX_DIN	NI_IRQ_PWDB
12	AUX_COMP_TMUX	AUX_PENIRQ_TMUX	NI_ADC_PWDB	MON_AUX_SCLK
13	GPIO_SRST2_IN	RG_VSIM1_EN	RG_VSIM1_VOSEL	QI_SIMRST
14	GPIO_SCLK2_IN	RG_VSIM2_EN	C2A_SIM2SEL	QI_SIMRST2_OUT
15	0	0	EN_VTCXO	EN_BB
16	0	0	0	0
17	PMU_THR_STATUS_TMUX[2]	PMU_THR_STATUS_TMUX[1]	PMU_THR_STATUS_TMUX[0]	VA_OC_STATUS_TMUX
18	VCAMA_OC_STATUS_TMUX	VCAMD_OC_STATUS_TMUX	VUSB_OC_STATUS_TMUX	VCORE_OC_STATUS_TMUX
19	C2A_INTERNAL_PWM	C2A_INTERNAL_PWM2	PMU_OC_INT	VA_OC_INT
20	VCAMA_OC_INT	VCAMD_OC_INT	VUSB_OC_INT	0
21	0	PWRKEY_VCORE_TMUX	PWRKEY_DEB_TMUX	TEST_MODE_POR_TMUX
22	0	0	0	0
23	0	0	QI_VCAMA_SOFT_STB	QI_VCAMD_SOFT_STB
24	0	0	MON_USB_CLK_INT	MON_FMCU_CK
25	0	0	0	0
26	0	0	0	0
27	STRUP_FLAG_OUT_TMUX[3]	STRUP_FLAG_OUT_TMUX[2]	STRUP_FLAG_OUT_TMUX[1]	STRUP_FLAG_OUT_TMUX[0]
28	RG_CHRWDT_WR	QI_UPLL_PWD	QI_VUPG[5]	QI_VUPG[4]
29	QI_VRF_EN	QI_VTCXO_EN	RG_VCAMA_EN	RG_VCAMD_EN

MediaTek Confidential Release for Cenon WCX

This document contains information that is proprietary to MediaTek Inc.

Unauthorized reproduction or disclosure of this information in whole or in part is strictly prohibited.

30	RG_MPLL_FBDIV[7]	RG_MPLL_FBDIV[6]	RG_MPLL_FBDIV[5]	RG_MPLL_FBDIV[4]
31	0	0	RG_ISINKS_CH0_EN	RG_ISINKS_CH1_EN

X	MON[3]	MON[2]	MON[1]	MON[0]
00	MON_VSDM_CK	MON_ASDM_CK	A2T_VTXSOUT	NI_ZCD_STATE_TMUX
01	0	0	DA_AYDL[8]	DA_AYDR[8]
02	DA_AYDL[3]	DA_AYDL[2]	DA_AYDL[1]	DA_AYDL[0]
03	DA_AYDR[3]	DA_AYDR[2]	DA_AYDR[1]	DA_AYDR[0]
04	A2T_EDGERFRX_BNI	A2T_EDGERFRX_BPI	A2T_EDGERFRX_BNQ	A2T_EDGERFRX_BPQ
05	CHRWDT_OUT_TMUX	CHRDET_TMUX	CHR_LDO_DET_TMUX	CHR_EN
06	VBAT_CV_DET_TMUX	VBAT_CC_DET_TMUX	VCDT_HV_DET_TMUX	VCDT_LV_DET_TMUX
07	AUX_ST	AUX_CS_B	CS_DET_TMUX	BATON_UNDET_TMUX
08	PCHR_FLAG_OUT_TMUX[3]	PCHR_FLAG_OUT_TMUX[2]	PCHR_FLAG_OUT_TMUX[1]	PCHR_FLAG_OUT_TMUX[0]
09	NI_APC_PWDB	NI_APC_TG	DA_APC_BUS[9]	DA_APC_BUS[8]
10	DA_APC_BUS[3]	DA_APC_BUS[2]	DA_APC_BUS[1]	DA_APC_BUS[0]
11	NI_SEL[3]	NI_SEL[2]	NI_SEL[1]	NI_SEL[0]
12	AUX_COMP_TMUX	AUX_PENIRQ_TMUX	A2T_AUX_SFSO	A2T_AUX_SDO
13	NI_SIMCLK	NI_SIMDATA_OE	A2C_SIMDATA_IN	NI_SIMDATA_OUT
14	NI_SIMCLK2_OUT	NI_SIMDATA2_OE	A2C_SIM2DATA_IN	NI_SIMDATA2_OUT
15	EN_EXT	DCXO_DELAY	PLL_PWDB	EN_DCXO
16	SPK_OCP_DET_TMUX	SPK_OCN_DET_TMUX	SPK_OC_DET_TMUX	PMU_THR_PWROFF
17	VM_OC_STATUS_TMUX	VIO_OC_STATUS_TMUX	VRF_OC_STATUS_TMUX	VTCXO_OC_STATUS_TMUX
18	VSIM1_OC_STATUS_TMUX	VSIM2_OC_STATUS_TMUX	VIBR_OC_STATUS_TMUX	SPK_OC_DET_TMUX
19	VM_OC_INT	VIO_OC_INT	VRF_OC_INT	VTCXO_OC_INT
20	VSIM1_OC_INT	VSIM2_OC_INT	VIBR_OC_INT	SPK_OC_INT

MediaTek Confidential Release for Cenon WCX

This document contains information that is proprietary to MediaTek Inc.

Unauthorized reproduction or disclosure of this information in whole or in part is strictly prohibited.

21	PMU_RSTB_TMUX	CHRDET_TMUX	PMU_DCXO26M_ON_TMUX	PMU_DCXO26M_DLY_TMUX
22	0	QI_UPLL_PWD	SPK_OC_DET_TMUX	SPK_OC_DEG
23	QI_VUSB_SOFT_STB	QI_VSIM1_SOFT_STB	QI_VSIM2_SOFT_STB	QI_VIBR_SOFT_STB
24	MON_FDSP_CK	MON_FUSB_CK	MON_FGSM_CK	MON_F48M_CK
25	MON_CLKSQ_26M_CK	MON_FMCU_CK	MPLL_FHPRD	MPLL_CLKSWPRD
26	MON_F32K_CK	FQMTR_BUSY	MON_FQMTR_CK	MON_CLK26M_CK
27	QI_CLKSQ_CKSEL	DA_KPLED_EN	RG_VIBR_EN	QI_CLKSQ_DIFF_PWDB
28	QI_VUPG[3]	QI_VUPG[2]	QI_VUPG[1]	QI_VUPG[0]
29	RG_VUSB_EN	QI_CLKSQ_SIN_PWDB	QI_MPLL_PWD	RG_SPK_EN
30	RG_MPLL_FBDIV[3]	RG_MPLL_FBDIV[2]	RG_MPLL_FBDIV[1]	RG_MPLL_FBDIV[0]
31	RG_ISINKS_CH2_EN	RG_ISINKS_CH3_EN	CHR_EN	DA_SPK_EN

83010F14h MIXEDSYS_MON_CON1 **MIXEDSYS_MON_CON1**

Bit	15	14	13	12	11	10	9	8	7	6	5	4	3	2	1	0
Name									MIXEDSYS_MON_OUT							
Type									RW							
Reset									0							

Set this register for Monitor circuit configuration controls.

MIXEDSYS_MON_OUT monitor debug output

83010F18h MIXEDSYS_MON_CON2 **MIXEDSYS_MON_CON2**

Bit	15	14	13	12	11	10	9	8	7	6	5	4	3	2	1	0
Name									MIXEDSYS_MON_DATA							
Type									R							
Reset									0							

Set this register for MIXEDSYS Monitor Data configuration controls.

MIXEDSYS_MON_DATA monitor debug output

83010F20h ABB_MON_CON0 **ABB_MON_CON0**

Bit	15	14	13	12	11	10	9	8	7	6	5	4	3	2	1	0
Name												ABB_MON_SEL				

MediaTek Confidential Release for Cenon WCX

This document contains information that is proprietary to MediaTek Inc.

Unauthorized reproduction or disclosure of this information in whole or in part is strictly prohibited.

Type												RW
Reset												1Fh

ABB_MON_SEL monitor flags output select

X	MON[7]	MON[6]	MON[5]	MON[4]
00	0	0	0	MON_ESDM_CK
01	0	0	0	0
02	DA_AYDL[7]	DA_AYDL[6]	DA_AYDL[5]	DA_AYDL[4]
03	DA_AYDR[7]	DA_AYDR[6]	DA_AYDR[5]	DA_AYDR[4]
04	0	0	QI_EDGERFRX_PWDB	0
05	0	0	0	0
06	0	0	0	VBAT_OV_DET_TMUX
07	0	0	AUX_COMP_TMUX	AUX_PENIRQ_TMUX
08	0	0	RG_PCHR_AUTOMODE	NI_PCHR_TEST_CK
09	0	0	OTG_BVALID_TMUX	RG_CSDAC_EN
10	DA_APC_BUS[7]	DA_APC_BUS[6]	DA_APC_BUS[5]	DA_APC_BUS[4]
11	AUX_ST	AUX_CS_B	AUX_DIN	NI_IRQ_PWDB
12	AUX_COMP_TMUX	AUX_PENIRQ_TMUX	NI_ADC_PWDB	MON_AUX_SCLK
13	GPIO_SRST2_IN	RG_VSIM1_EN	RG_VSIM1_VOSEL	QI_SIMRST
14	GPIO_SCLK2_IN	RG_VSIM2_EN	C2A_SIM2SEL	QI_SIMRST2_OUT
15	0	0	EN_VTCXO	EN_BB
16	0	0	0	0
17	PMU_THR_STATUS_TMUX[2]	PMU_THR_STATUS_TMUX[1]	PMU_THR_STATUS_TMUX[0]	VA_OC_STATUS_TMUX
18	VCAMA_OC_STATUS_TMUX	VCAMD_OC_STATUS_TMUX	VUSB_OC_STATUS_TMUX	VCORE_OC_STATUS_TMUX
19	C2A_INTERNAL_PWM	C2A_INTERNAL_PWM2	PMU_OC_INT	VA_OC_INT
20	VCAMA_OC_INT	VCAMD_OC_INT	VUSB_OC_INT	0

MediaTek Confidential Release for Cenon WCX

This document contains information that is proprietary to MediaTek Inc.

Unauthorized reproduction or disclosure of this information in whole or in part is strictly prohibited.

21	0	PWRKEY_VCORE_TMUX	PWRKEY_DEB_TMUX	TEST_MODE_POR_TMUX
22	0	0	0	0
23	0	0	QI_VCAMA_SOFT_STB	QI_VCAMD_SOFT_STB
24	0	0	MON_USB_CLK_INT	MON_FMCU_CK
25	0	0	0	0
26	0	0	0	0
27	STRUP_FLAG_OUT_TMUX[3]	STRUP_FLAG_OUT_TMUX[2]	STRUP_FLAG_OUT_TMUX[1]	STRUP_FLAG_OUT_TMUX[0]
28	RG_CHRWDT_WR	QI_UPLL_PWD	QI_VUPG[5]	QI_VUPG[4]
29	QI_VRF_EN	QI_VTCXO_EN	RG_VCAMA_EN	RG_VCAMD_EN
30	RG_MPLL_FBDIV[7]	RG_MPLL_FBDIV[6]	RG_MPLL_FBDIV[5]	RG_MPLL_FBDIV[4]
31	0	0	RG_ISINKS_CH0_EN	RG_ISINKS_CH1_EN

X	MON[3]	MON[2]	MON[1]	MON[0]
00	MON_VSDM_CK	MON_ASDM_CK	A2T_VTXSOUT	NI_ZCD_STATE_TMUX
01	0	0	DA_AYDL[8]	DA_AYDR[8]
02	DA_AYDL[3]	DA_AYDL[2]	DA_AYDL[1]	DA_AYDL[0]
03	DA_AYDR[3]	DA_AYDR[2]	DA_AYDR[1]	DA_AYDR[0]
04	A2T_EDGERFRX_BNI	A2T_EDGERFRX_BPI	A2T_EDGERFRX_BNQ	A2T_EDGERFRX_BPQ
05	CHRWDT_OUT_TMUX	CHRDET_TMUX	CHR_LDO_DET_TMUX	CHR_EN
06	VBAT_CV_DET_TMUX	VBAT_CC_DET_TMUX	VCDT_HV_DET_TMUX	VCDT_LV_DET_TMUX
07	AUX_ST	AUX_CS_B	CS_DET_TMUX	BATON_UNDET_TMUX
08	PCHR_FLAG_OUT_TMUX[3]	PCHR_FLAG_OUT_TMUX[2]	PCHR_FLAG_OUT_TMUX[1]	PCHR_FLAG_OUT_TMUX[0]
09	NI_APC_PWDB	NI_APC_TG	DA_APC_BUS[9]	DA_APC_BUS[8]
10	DA_APC_BUS[3]	DA_APC_BUS[2]	DA_APC_BUS[1]	DA_APC_BUS[0]
11	NI_SEL[3]	NI_SEL[2]	NI_SEL[1]	NI_SEL[0]

MediaTek Confidential Release for Cenon WCX

This document contains information that is proprietary to MediaTek Inc.

Unauthorized reproduction or disclosure of this information in whole or in part is strictly prohibited.

12	AUX_COMP_TMUX	AUX_PENIRQ_TMUX	A2T_AUX_SFSO	A2T_AUX_SDO
13	NI_SIMCLK	NI_SIMDATA_OE	A2C_SIMDATA_IN	NI_SIMDATA_OUT
14	NI_SIMCLK2_OUT	NI_SIMDATA2_OE	A2C_SIM2DATA_IN	NI_SIMDATA2_OUT
15	EN_EXT	DCXO_DELAY	PLL_PWDB	EN_DCXO
16	SPK_OCP_DET_TMUX	SPK_OCN_DET_TMUX	SPK_OC_DET_TMUX	PMU_THR_PWROFF
17	VM_OC_STATUS_TMUX	VIO_OC_STATUS_TMUX	VRF_OC_STATUS_TMUX	VTCXO_OC_STATUS_TMUX
18	VSIM1_OC_STATUS_TMUX	VSIM2_OC_STATUS_TMUX	VIBR_OC_STATUS_TMUX	SPK_OC_DET_TMUX
19	VM_OC_INT	VIO_OC_INT	VRF_OC_INT	VTCXO_OC_INT
20	VSIM1_OC_INT	VSIM2_OC_INT	VIBR_OC_INT	SPK_OC_INT
21	PMU_RSTB_TMUX	CHRDET_TMUX	PMU_DCXO26M_ON_TMUX	PMU_DCXO26M_DLY_TMUX
22	0	QI_UPLL_PWD	SPK_OC_DET_TMUX	SPK_OC_DEG
23	QI_VUSB_SOFT_STB	QI_VSIM1_SOFT_STB	QI_VSIM2_SOFT_STB	QI_VIBR_SOFT_STB
24	MON_FDSP_CK	MON_FUSB_CK	MON_FGSM_CK	MON_F48M_CK
25	MON_CLKSQ_26M_CK	MON_FMCU_CK	MPLL_FHPRD	MPLL_CLKSWPRD
26	MON_F32K_CK	FQMTR_BUSY	MON_FQMTR_CK	MON_CLK26M_CK
27	QI_CLKSQ_CKSEL	DA_KPLED_EN	RG_VIBR_EN	QI_CLKSQ_DIFF_PWDB
28	QI_VUPG[3]	QI_VUPG[2]	QI_VUPG[1]	QI_VUPG[0]
29	RG_VUSB_EN	QI_CLKSQ_SIN_PWDB	QI_MPLL_PWD	RG_SPK_EN
30	RG_MPLL_FBDIV[3]	RG_MPLL_FBDIV[2]	RG_MPLL_FBDIV[1]	RG_MPLL_FBDIV[0]
31	RG_ISINKS_CH2_EN	RG_ISINKS_CH3_EN	CHR_EN	DA_SPK_EN

83010F30h **SIM_MON_CON0** **SIM_MON_CON0**

Bit	15	14	13	12	11	10	9	8	7	6	5	4	3	2	1	0
Name													SIM_MON_SEL			
Type													RW			
Reset													7h			

SIM_MON_SEL monitor flags output select

MediaTek Confidential Release for Cenon WCX

This document contains information that is proprietary to MediaTek Inc.

Unauthorized reproduction or disclosure of this information in whole or in part is strictly prohibited.

X	MON[1]	MON[0]
00	GPIO_SRST2_IN	RG_VSIM1_EN
01	RG_VSIM1_VOSEL	QI_SIMRST
02	NI_SIMCLK	NI_SIMDATA_OE
03	A2C_SIMDATA_IN	NI_SIMDATA_OUT
04	GPIO_SCLK2_IN	RG_VSIM2_EN
05	C2A_SIM2SEL	QI_SIMRST2_OUT
06	NI_SIMCLK2_OUT	NI_SIMDATA2_OE
07	A2C_SIM2DATA_IN	NI_SIMDATA2_OUT

6.4 Programming Guide

6.4.1 BBRX Register Setup

The register used to control analog base-band receiver is ACIF_BBRX_CON.

6.4.1.1 Programmable Biasing Current

To maximize the yield in modern digital process, the receiver features providing 4-bit 9-level programmable current to bias internal analog blocks. The 5-bits registers CALBIAS[3:0] is coded with 2's complement format.

6.4.1.2 Offset Calibration

The base-band downlink receiver (RX) provides analog hardware for DSP algorithm to correct the offset error. The connection for measurement of RX offset error is shown in **Figure 58**, and the corresponding calibration procedure is described below.

MediaTek Confidential Release for Cenon WCX

This document contains information that is proprietary to MediaTek Inc.

Unauthorized reproduction or disclosure of this information in whole or in part is strictly prohibited.

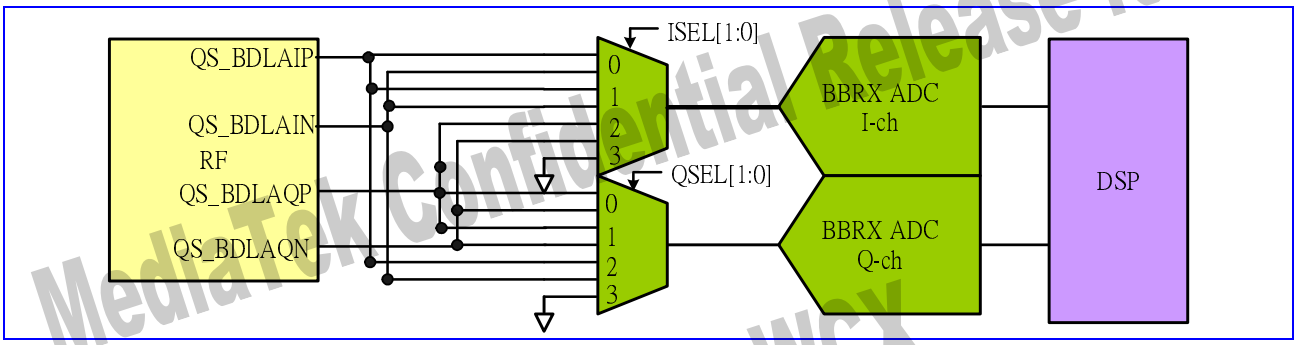

Figure 58 Base-band A/D Offset Calibration

6.4.1.3 Downlink RX Offset Error Calibration

The RX offset measurement is achieved by selecting grounded input to A/D converter (set ISEL [1:0] ='11' and QSEL [1:0] ='11' to select channel 3 of the analog input multiplexer, as shown in **Figure 59**. The output of the ADC is sent to DSP for further offset cancellation. The offset cancellation accuracy depends on the number of samples being converted. That is, more accurate measurement can be obtained by collecting more samples followed by averaging algorithm.

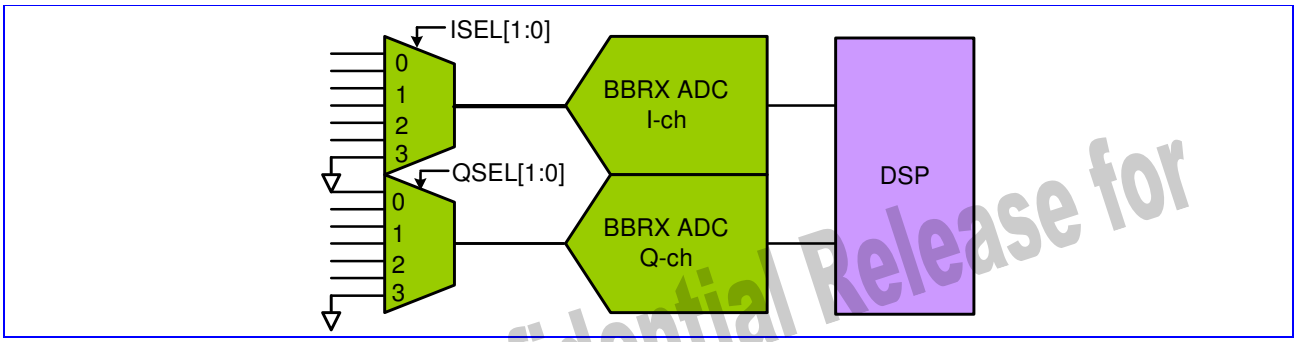

Figure 59 Downlink ADC Offset Error Measurement

6.4.2 APC-DAC Register Setup

The register used to control the APC DAC is ACIF_APC_CON, which providing 4-bit 9-level programmable current to bias internal analog blocks. The 4-bits registers APC_CALI [3:0] is coded with 2's complement format.

MediaTek Confidential Release for Cenon WCX

This document contains information that is proprietary to MediaTek Inc.

Unauthorized reproduction or disclosure of this information in whole or in part is strictly prohibited.

6.4.3 Auxiliary A/D Conversion Register Setup

The register used to control the Aux-ADC is ACIF_AUX_CON0. For this register, which providing 2-bit 4-level programmable current to bias internal analog blocks.

6.4.4 Voice-band Blocks Register Setup

The registers used to control AMB are ACIF_VOICE_CON0, ACIF_VOICE_CON1, ACIF_VOICE_CON2, and ACIF_VOICE_CON3. For these registers, please refer to chapter "Analog Chip Interface".

6.4.4.1 Reference Circuit

The voice-band blocks include internal bias circuits, a differential voltage reference circuit and a single-end microphone bias circuit. Internal bias current could be calibrated by varying VCALI[3:0] (coded with 2's complement format).

For proper operation, there should be an external 1uF capacitor connected to output pin AU_VCM. The VCM voltage (~1.4V, typical). The following table illustrates typical 0dBm0 voltage when uplink/downlink programmable gains are unity. For other gain setting, 0dBm0 reference level should be scaled accordingly.

Symbol	Parameter	Min	Typical	Max	Unit
$V_{0dBm0,UP}$	0dBm0 Voltage for Uplink Path, Applied Differentially Between Positive and Negative Microphone Input Pins		0.2V		V-rms
$V_{0dBm0,Dn}$	0dBm0 voltage for Downlink Path, Appeared Differentially Between Positive and Negative Power Amplifier Output Pins		0.6V		V-rms

Table 73 0dBm0 reference level for unity uplink/downlink gain

The microphone bias circuit generates a single-ended output voltage on AU_MICBIAS_P for external electret type microphone. Typical output voltage is 1.9 V. The max current supplied by microphone bias circuit is 2mA.

6.4.4.2 Uplink Path

Uplink path of voice-band blocks includes an uplink programmable gain amplifier and a sigma-delta modulator.

MediaTek Confidential Release for Cenon WCX

This document contains information that is proprietary to MediaTek Inc.

Unauthorized reproduction or disclosure of this information in whole or in part is strictly prohibited.

6.4.4.2.1 Uplink Programmable Gain Amplifier

Input to the PGA is a multiplexer controlled by VCFG [3:0], as described in the following table. In normal operation, only AC coupling is suggested if amplification of input signal is desired

Control Signal	Function	Descriptions
VCFG[0]	Input Selector	0: Input 0 (From AU_VIN0_P / AU_VIN0_N) selected 1: Input 1 (From AU_VIN1_P / AU_VIN1_N) selected
VCFG[1]	Input Selector	1: Input FM (From AU_FMINL / AU_FMINR) Is Selected
VCFG[2]	Coupling Mode	0: AC Coupling (for testing purpose) 1: DC Coupling
VCFG[3]	Gain Mode	0: Amplification Mode (gain range 1~49 dB) 1: Bypass Mode

Table 74 Uplink PGA input configuration setting

The PGA itself provides programmable gain (through VUPG[5:0]) with step of 1.0 dB, as listed in the following table.

VUPG [5:0]	Gain	VUPG [5:0]	Gain
111111	49 dB	011111	17 dB
111110	48 dB	011110	16 dB
111101	47 dB	011101	15 dB
111100	46 dB	011100	14 dB
111011	45 dB	011011	13 dB
111010	44 dB	011010	12 dB
111001	43 dB	011001	11 dB
111000	42 dB	011000	10 dB
110111	41 dB	010111	9 dB
110110	40 dB	010110	8 dB
110101	39 dB	010101	7 dB
110100	38 dB	010100	6 dB
110011	37 dB	010011	5 dB
110010	36 dB	010010	4 dB

MediaTek Confidential Release for Cenon WCX

This document contains information that is proprietary to MediaTek Inc.

Unauthorized reproduction or disclosure of this information in whole or in part is strictly prohibited.

110001	35 dB	010001	3 dB
110000	34 dB	010000	2 dB
101111	33 dB	001111	1 dB
101110	32 dB	001110	N/A-
101101	31dB	001101	N/A-
101100	30 dB	001100	N/A-
101011	29 dB	001011	N/A-
101010	28 dB	001010	N/A-
101001	27 dB	001001	N/A-
101000	26 dB	001000	N/A-
100111	25 dB	000111	N/A-
100110	24 dB	000110	N/A-
100101	23 dB	000101	N/A-
100100	22 dB	000100	N/A-
100011	21 dB	000011	N/A-
100010	20 dB	000010	N/A-
100001	19 dB	000001	N/A-
100000	18 dB	000000	N/A-

Table 75 Uplink PGA gain setting (VUPG[5:0])

The following table illustrates typically the 0dBm0 voltage applied at the microphone inputs, differentially, for several gain settings.

VCFG [3] ='0'		VCFG [3] ='1' (only valid for input 1)	
VUPG [5:0]	0dBm0 (V-rms)	VUPG [5:0]	0dBm0 (V-rms)
111100	2mV	XXXXXX	0.2V
101000	20mV		
100000	50mV		
010100	0.2V		

Table 76 0dBm0 voltage at microphone input pins

MediaTek Confidential Release for Cenon WCX

This document contains information that is proprietary to MediaTek Inc.

Unauthorized reproduction or disclosure of this information in whole or in part is strictly prohibited.

6.4.4.2.2 Sigma-Delta Modulator

Analog-to-digital conversion in uplink path is made with a second-order sigma-delta modulator (SDM) whose sampling rate is 6500KHz. For test purpose, one can set VADCINMODE to HI to form a look-back path from downlink DAC output to SDM input. The default value of VADCINMODE is zero.

6.4.4.3 Downlink Path

Downlink path of voice-band blocks includes a programmable output power amplifiers.

6.4.4.3.1 Downlink Programmable Power Amplifier

Voice-band analog blocks include two identical output power amplifiers with programmable gain.

For the amplifier itself, programmable gain setting is described in the following table.

VDPG0[3:0] / VDPG1[3:0]	Gain
1111	8dB
1110	6dB
1101	4dB
1100	2dB
1011	0dB
1010	-2dB
1001	-4dB
1000	-6dB
0111	-8dB
0110	-10dB
0101	-12dB
0100	-14dB
0011	-16dB
0010	N/A
0001	N/A
0000	N/A

Table 77 Downlink power amplifier gain setting

MediaTek Confidential Release for Cenon WCX
MediaTek Confidential Release for Cenon WCX

This document contains information that is proprietary to MediaTek Inc.

Unauthorized reproduction or disclosure of this information in whole or in part is strictly prohibited.

Control signal VFLOAT, when set to 'HI', is used to make output nodes totally floating in power down mode. If VFLOAT is set to 'LOW" in power down mode, there will be a resistor of 50k ohm (typical) between AU_VOUT0_P and AU_VOUT0_N, as well as between AU_VOUT0_P and AU_VOUT0_N.

The amplifiers deliver signal power to drive external earphone. The minimum resistive load is 28 ohm and the upper limit of the output current is 50mA. On the basis that 3.14dBm0 digital input signal into downlink path produces DAC output differential voltage of 0.87V-rms (typical), the following table illustrates the power amplifier output signal level (in V-rms) and signal power for an external 32 ohm resistive load.

VDPG[3:0]	Output Signal Level (V-rms)	Output Signal Power (mW / dBm)
0010	0.11	0.37/-4.3
0110	0.27	2.28/3.6
1010	0.69	14.8/11.7
1110	1.74	94.6/19.8

Table 78 Output signal level/power for 3.14dBm0 input. External resistive load = 32 ohm

The following table illustrates the output signal level and power for different resistive load when VDPG =1110.

RLOAD	Output Signal Level (V-rms)	Output Signal Power (mW / dBm)
30	1.74	101/20
100	1.74	30.3/14.8
600	1.74	5/7

Table 79 Output signal level/power for 3.14dBm0 input, VDPG =1110

6.4.4.4 Power Down Control

Each block inside audio mixed-signal blocks features dedicated power-down control, as illustrated in the following table.

MediaTek Confidential Release for Cenon WCX

This document contains information that is proprietary to MediaTek Inc.

Unauthorized reproduction or disclosure of this information in whole or in part is strictly prohibited.

Control Signal	Descriptions
VBIAS_PWDB	Power Down Reference Circuits (Active Low)
VLNA_PWDB	Power Down Uplink PGA (Active Low)
VADC_PWDB	Power Down Uplink SDM (Active Low)
VDAC_PWDB	Power Down DAC (Active Low)
VOUT0_PWDB	Power Down Downlink Power Amp 0 (Active Low)

Table 80 Voice-band blocks power down control

6.4.5 Audio-band Blocks Register Setup

The registers used to control audio blocks are ACIF_AUDIO_CON0, ACIF_AUDIO_CON1, ACIF_AUDIO_CON2 and ACIF_AUDIO_CON3. For these registers, please refer to chapter "Analog Chip Interface"

6.4.5.1 Output Gain Control

Audio blocks include stereo audio DACs and programmable output power amplifiers. The DACs convert input bit-stream to analog signal by sampling rate of Fs*128 where Fs could be 32kHz, 44.1kHz, or 48kHz. Besides, it performs a 2nd-order butterworth filtering. The two identical output power amplifiers with programmable gain are designed to driving external AC-coupled single-end speaker. The minimum resistor load is 16 ohm and the maximum driving current is 50mA. The programmable gain setting, controlled by APGR[3:0] and APGL[3:0], is the same as that of the voice-band amplifiers.

Unlike voice signals, 0dBFS defines the full-scale audio signals amplitude. Based on bandgap reference voltage again, the following table illustrates the power amplifier output signal level (in V-rms) and signal power for an external 16 ohm resistive load.

APGR[3:0]/ APGL[3:0]	Output Signal Level (V-rms)	Output Signal Power (mW / dBm)
0010	0.055	0.19/-7.2
0110	0.135	1.14/0.6
1010	0.345	7.44/8.7
1110	0.87	47.3/16.7

Table 81 Output signal level/power for 0dBFS input. External resistive load = 16 ohm

MediaTek Confidential Release for Cenon WCX

This document contains information that is proprietary to MediaTek Inc.

Unauthorized reproduction or disclosure of this information in whole or in part is strictly prohibited.

6.4.5.2 Mute Function and Power Down Control

By setting AMUTER (AMUTEL) to high, right (left) channel output will be muted.

Each block inside audio mixed-signal blocks features dedicated power-down control, as illustrated in the following table.

Control Signal	Descriptions
ABIAS_PWDB	Power Down Reference Circuits (Active Low)
ADACL_PWDB	Power Down L-Channel DAC (Active Low)
ADACR_PWDB	Power Down R-Channel DAC (Active Low)
AOUTL_PWDB	Power Down L-Channel Audio Amplifier (Active Low)
AOUTR_PWDB	Power Down R-Channel Audio Amplifier (Active Low)

Table 82 Audio-band blocks power down control

6.4.6 Multiplexers for Audio and Voice Amplifiers

- The audio/voice amplifiers feature accepting signals from various signal sources including AU_FMINR/AU_FMINL pins, that aimed to receive stereo AM/FM signal from external radio chip:

1) Voice-band amplifier 0 accepts signals from voice DAC output only.
2) Audio left/right channel amplifiers receive signals from either voice DAC, audio DAC, or AM/FM radio input pins (controlled by registers ABUFSELL[2:0] and ABUFSELR[2:0]), too. Left and right channel amplifiers will produce identical output waveforms when receiving mono signals from voice DAC.

6.4.7 Preferred Microphone and Earphone Connections

In this section, preferred microphone and earphone connections are discussed.

Differential connection of microphone is shown below. This is the application circuits compatible with previous products. C1 and Rin form an AC coupling and high-pass network. C1*Rin should be chosen such that the in-band signal will not be attenuated too much. For differential minimum resistance of 13k ohm, minimum value of C1 is 170nF for less than 1dB attenuation at 300Hz. R2 is determined by microphone sensitivity. C2 and R2 form another low-pass filter to filtering noise coming from microphone bias pins. Pole frequency less than 50Hz is recommended.

MediaTek Confidential Release for Cenon WCX

This document contains information that is proprietary to MediaTek Inc.

Unauthorized reproduction or disclosure of this information in whole or in part is strictly prohibited.

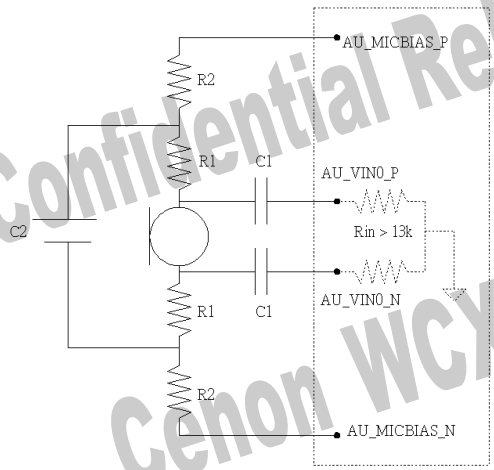

Figure 6 Differential Microphone Connection

Another suggested connection method of microphone is shown below. R1 is chosen based on microphone sensitivity requirement. C1 and Rin form an AC coupling and high-pass network. R2 needs proper adjustment to obtain the best noise performance on the voice uplink input terminals.

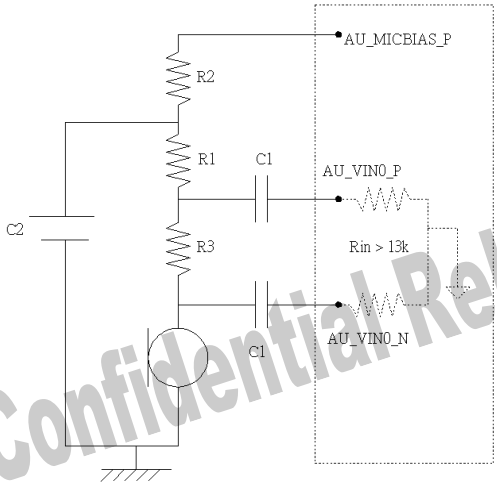

Figure 7 Single-ended Microphone Connection

For earphone, both connections can be used. The application circuit shown in Figure 7 is highly recommended to achieve the better performance.

MediaTek Confidential Release for Cenon WCX

This document contains information that is proprietary to MediaTek Inc.

Unauthorized reproduction or disclosure of this information in whole or in part is strictly prohibited.

6.4.8 Clock Squarer Register Setup

The register used to control clock squarer is CLKSQ_CON. For this register, please refer to chapter "Clocks".

6.4.9 Phase-Locked Loop Register Setup

For registers control the PLL, please refer to chapter "Clocks" and "Software Power Down Control"

6.4.9.1 Frequency Setup

The DSP/MCU PLL itself could be programmable to output either 52MHz or 104MHz clocks. Accompanied with additional digital dividers, 13/26/39/52/65/78/104 MHz clock outputs are supported.

6.4.9.2 Programmable Biasing Current

The PLLs feature providing 5-bit 32-level programmable current to bias internal analog blocks. The 5-bits registers CALI [4:0] is coded with 2's complement format.

6.4.10 32-khz Crystal Oscillator Register Setup

For registers that control the oscillator, please refer to chapter "Real Time Clock" and "Software Power Down Control".

MediaTek Confidential Release for Cenon WCX
MediaTek Confidential Release for Cenon WCX

This document contains information that is proprietary to MediaTek Inc.

Unauthorized reproduction or disclosure of this information in whole or in part is strictly prohibited.