Summary of CPEN 411

Tom Wang

Fall, 2023

1 Terminology

The Iron law

The sum of each cycle execution time is the total time.

CPI = Cycle per Instruction

$$\frac{\text{CPU time}}{\text{Program}} = \frac{\text{Instructions}}{\text{Program}} \times \frac{\text{Clock Cycles}}{\text{Instruction}} \times \frac{\text{Seconds}}{\text{Clock Cycle}}$$

$$\text{Execution Time} = \frac{1}{\text{Performance}} = (\text{Instr. Count}) \times (\text{CPI}) \times (\text{cycle time})$$

$$\text{speedup} = \frac{\text{Q1}}{\text{Q2}}$$

The speedup of Q2 with respect to Q1 is xxx.

Amdahl's Law

$$\text{ExTime}_{new} = \text{ExTime}_{old} \times \left[(1 - \text{Fraction}_{enhanced}) + \frac{\text{Fraction}_{enhanced}}{\text{Speedup}_{enhanced}} \right]$$

$$\text{Speedup}_{overall} = \frac{\text{ExTime}_{old}}{\text{ExTime}_{new}} = \frac{1}{(1 - \text{Fraction}_{enhanced}) + \frac{\text{Fraction}_{enhanced}}{\text{Speedup}_{enhanced}}}$$

Dynamic Power

For CMOS chips, traditional dominant energy consumption has been in switching transistors, called **dynamic power**.

$$\text{Power}_{\text{dynamic}} = 0.5 * \text{CapacitiveLoad} * \text{Voltage}^2 * \text{FrequencySwitched}$$

For mobile devices, energy might be a better metric:

$$\text{Energy}_{\text{dynamic}} = \text{CapacitiveLoad} * \text{Voltage}^2$$

Capacitive load is a function of the number of transistors connected to output and technology, which determines the capacitance of wires and transistors.

Dropping voltage helps both power and energy.

For a fixed task, slowing the clock rate (frequency switched) reduced power, but not the total energy. However, a slower clock rate might allow lower voltage.

Clock gating: Turn off clocks for the parts that we do not use which saves energy and dynamic power. However, clock skew rises up, it is hard to be precise.

Stactic power

Leakage current flows even when a transistor is off. So there is static power.

$$\text{Power}_{\text{static}} = \text{Current}_{\text{static}} * \text{Voltage}$$

Leakage of current increases in processors with smaller transistor sizes.

Increasing the number of transistors increases power.

Very slow power systems can gate voltage to inactive modules.

2 Memory technologies

Learning objectives

- Identify memory technologies used today
- Contrast SRAM, RF, CAM, and DRAM structures
- Describe the tradeoffs (density, latency, power)

Memory hirerarchy

First of all, some definitions:

Storage: SSD or HDD

DARM: random-access semiconductor memory. Usually consisting of a tiny **capacitor** and a **transistor**. DRAM requires an external memory refresh because of slow leakage on the capacitor.

One trick to not block any code: rewrite a certain portion of it at once, and split it averagely into the refresh cycle. This way DRAM does not block any code for every refresh cycle.

- 1T + 1C: cheap as chips!
- read operation
  - precharge bitline to ½ V_{DD}
  - cap changes bitline V a little bit
  - read **destructive**: write value back

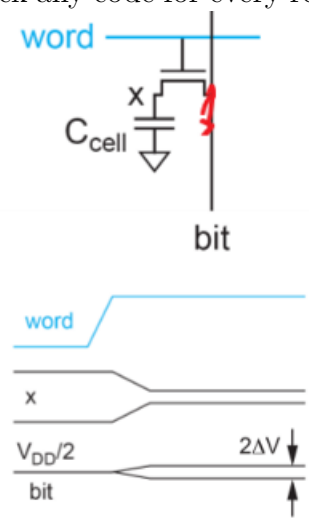

SRAM: A type of random access memory. Unlike DRAM, it does not need to refresh. SRAM is commonly used for a computer's cache memory, such as L2 or L3 cache. SRAM contains 6 transistors in total if counting the transistors to the bit line. Otherwise, 4 transistors.

- reading:
  - precharge both bitlines **high**
  - cell will pull down one of the bitlines
- writing:
  - one bitline pulls cell down

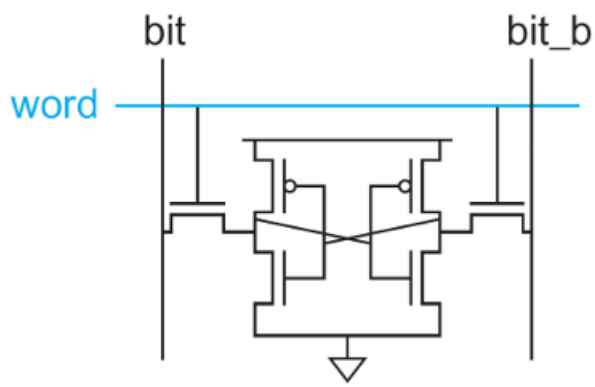

The following is the hierarchy.

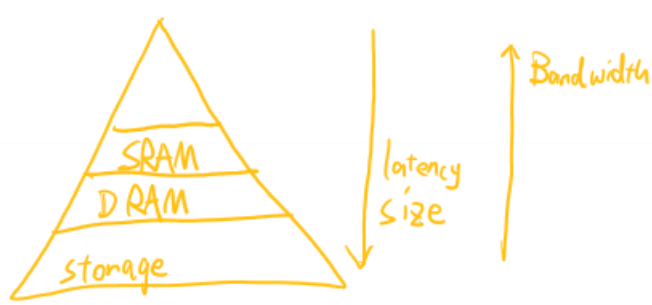

Memory addressing patterns

access pattern	**random access** address -> data	**associative lookup** key -> has match?
example application	register file direct-mapped caches main memory	associative caches / TLBs reservation stations load-store queue
technology	SRAM, RF, DRAM	Content Addressible Memory CAM

RAM addressing

- cells store data
- addr[$n-1$:k] selects row
- addr[$k-1$:0] selects word

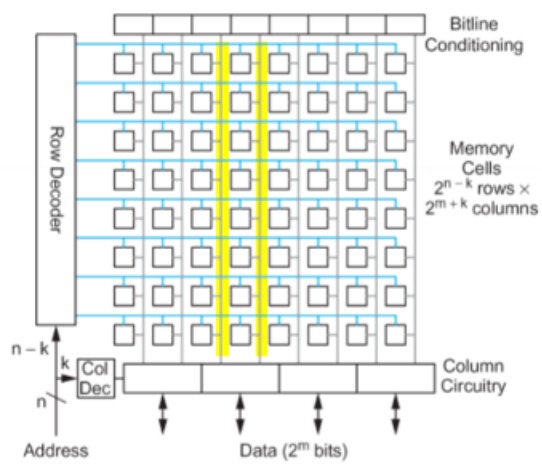

We turn on the whole row and the whole word to select the address. Here we want 'n' to be close to 'm'. If n>>m, n will dominate latency. Vice versa.

To read, address drives the word line, cells drive the bit lines. Then bit lines are read out and amplified.

To write, address drives the word line. The value drives the bit lines. Then we write the bitline values to the cells. Now cells keep the data.

For DRAM, each bank has a singlerow buffer. It acts as a cache within DRAM. Row buffer can serve multiple instructions. The first one takes much longer since it needs to fetch from the memory. The rest can directly read from the buffer, much faster.

- If an access stream has a locality, a row buffer is kept open. (open policy) Row buffer hits are cheap. Row buffer miss is a bank conflict and expensive because precharge is on the critical path

- If an access stream has little locality, bit lines are precharged immediately after access (close-page policy) Nearly every access is a row buffer miss. The precharge is usually not on the critical path.

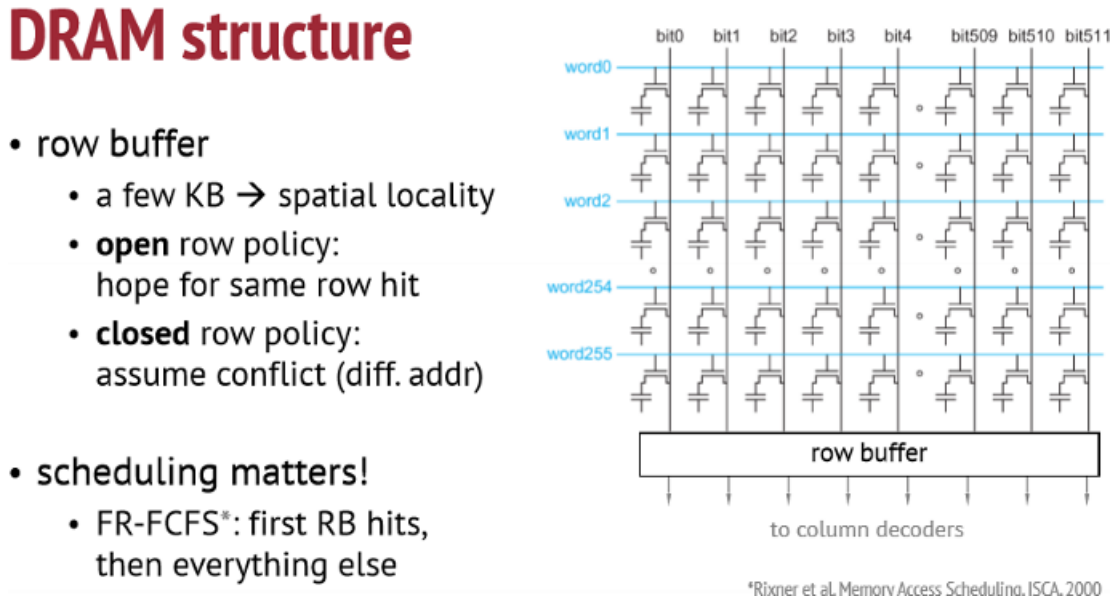

Rowhammer

Repeated samerow hits in recent DRAMs can flip bits in a neighboring row!

However, you need to access both the upper and lower addresses of the target row. If you only access one of them, then the row buffer will take all the calls due to optimization.

3 Caches and Prefetching

Avaliable technologies

- DRAM: dense and cheap but slow (10s of ns)
- SRAM: about 5 times more area per bit but fast! For SRAMs: the smaller the size, the faster the response.
- So now, we have a tradeoff between fast and big.

To solve the tradeoff problems, we establish a leveled memory system:

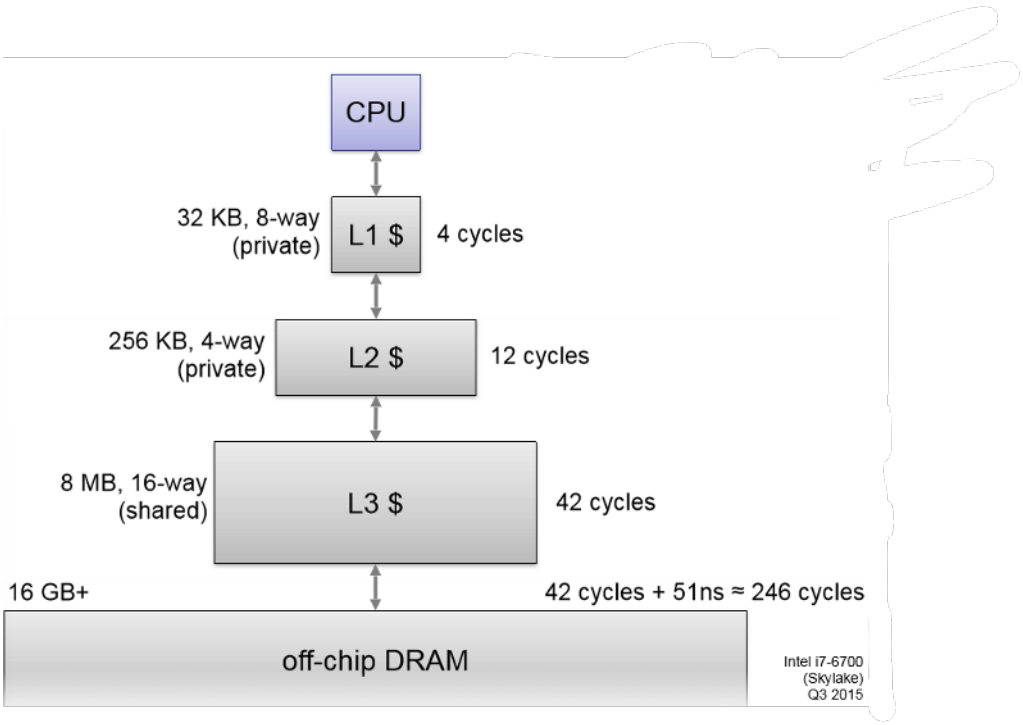

Memory access locality

First some terminology:

Temporal locality: If the program accesses a single location, then accesses it soon thereafter.

For example, you read the location and write to that location afterward. Y=Y+5

The idea of temporal locality is to keep copies of recently accessed data nearby. (i.e., in small, fast memory)

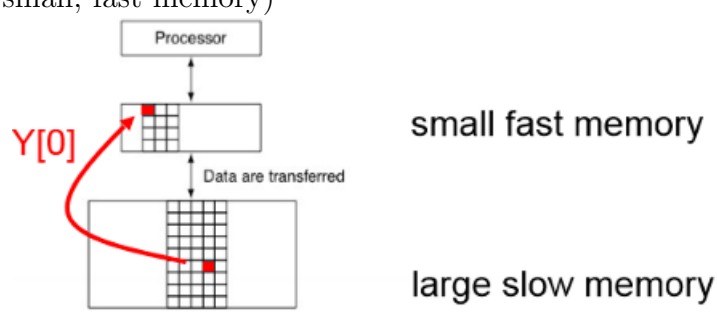

Here we move the data from DRAM into the cache for faster multiple visits.

There are two ways to manage fast storage:

- Option 1: scratchpad:
  - program copies most useful data. Unlike cache, scratchpad memory is typically not managed by software.

  - programmer or compiler decides what data or instructions should be placed in the scratchpad
  - used in GPUs and other contexts
  - The capacity of scratchpad memory is limited and is typically smaller than the cache memory but larger than CPU registers.
  - scratchpad memory is usually a single contiguous block of memory, and its size and organization are determined by the programmer.

- Option 2: cache
  - Managed automatically in hardware where it tracks locality patterns.
  - Functionally transparent to the programmer(Software).
  - Cache is organized into multiple levels, typically L1, L2 and sometimes L3.

Fully associated cache:

- Allows any block of data from the main memory to be placed in any cache location.
- There are no restrictions on where a particular block of data can be stored.
- There is no set index to determine where to place or find data. We use tags to keep track of which block of data is stored in each cache location:
  - Memory block address: to identify which memory block is stored in the cache location
  - Valid Bit: A valid bit indicates whether the cache location contains valid data. If the valid bit is set, it means that the data in that location is valid and corresponds to the given tag.
  - Dirty/Modified Bit: To indicate whether the data in the cache location has been modified and needs to be written back to the main memory.
- Fully associative caches tend to have fewer cache misses due to conflicts (where multiple memory blocks are complete for the same cache location) because they can accommodate any data block in any cache location.
- Implementing a fully associative cache can be more expensive in terms of hardware complexity and cost compared to others. The need for tags and additional logic for managing cache entries adds to the hardware overhead.
- Fully associative caches can achieve high hit rates for data access because they can match requested data with any cache entry, regardless of its location within the cache. This makes them particularly effective for applications with irregular memory access patterns.

Problems with fully associated caches:

- Tag must store the full address of the memory
- Address can be in any row, have to search all rows.

Spatial locality: After accessing one location, the program accesses a nearby location. For example, Foreach (var i in Array). accesses all components of the array starting the address of the array.

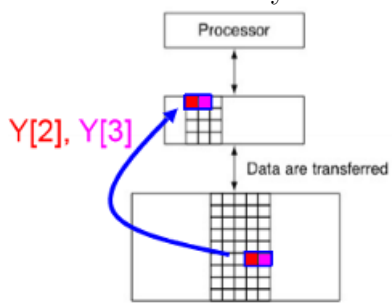

IDEA: When filling cache entry, also transfer adjacent data.

Memory is divided into blocks (cache lines) with power-of-two size. Blocks start at addresses aligned to block size. Typically 64 bytes for CPU and 128 bytes for GPU.

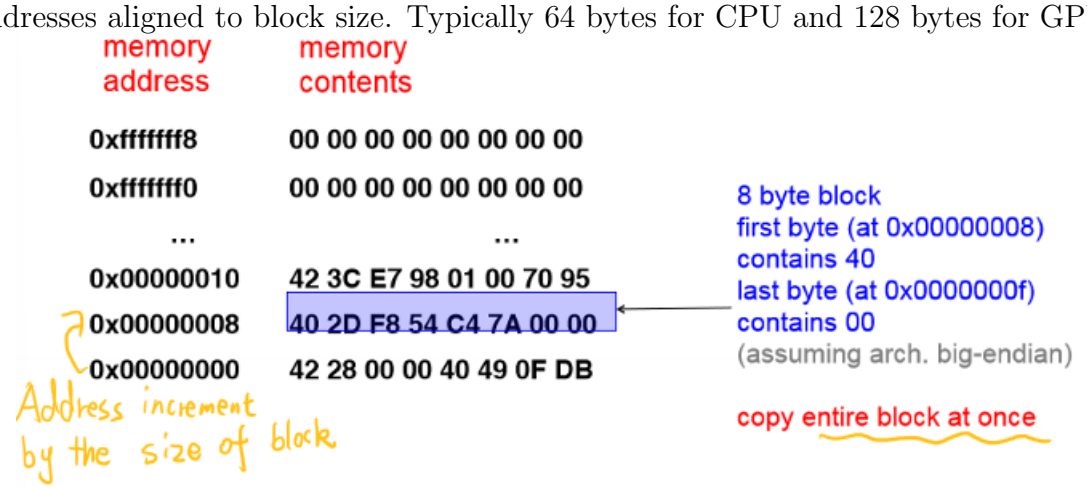

So we include the 8byte address in the tag, 64byte data in the lower bits of the block. The highest bits are valid and modified bits.

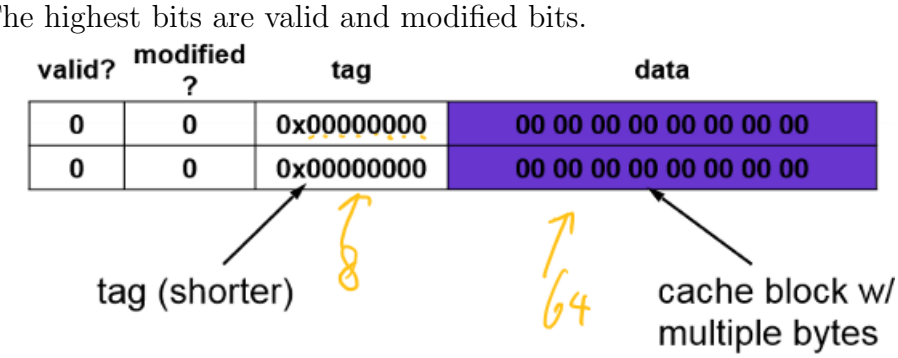

Block offset

Block offset is a component of memory addresses that helps determine the position of a specific byte within a memory block or cache line.

To address individual bytes within a block, the block offset is represented in binary format. The number of bits required for the block offset depends on the block size. For example, if the block size is 64 bytes, you would need 6 bits to uniquely address any byte within that block.

$$\text{Block Offset Bits} = \log_2(\text{Block Size in Bytes})$$

Direct Mapped cache

The cache is divided into multiple fixed-size blocks, also known as cache lines. If there are 2^n lines. Then there are 2^m partitions in the main memory. Each partition is 2^n lines.

A tag has m bit and the index has n bit.

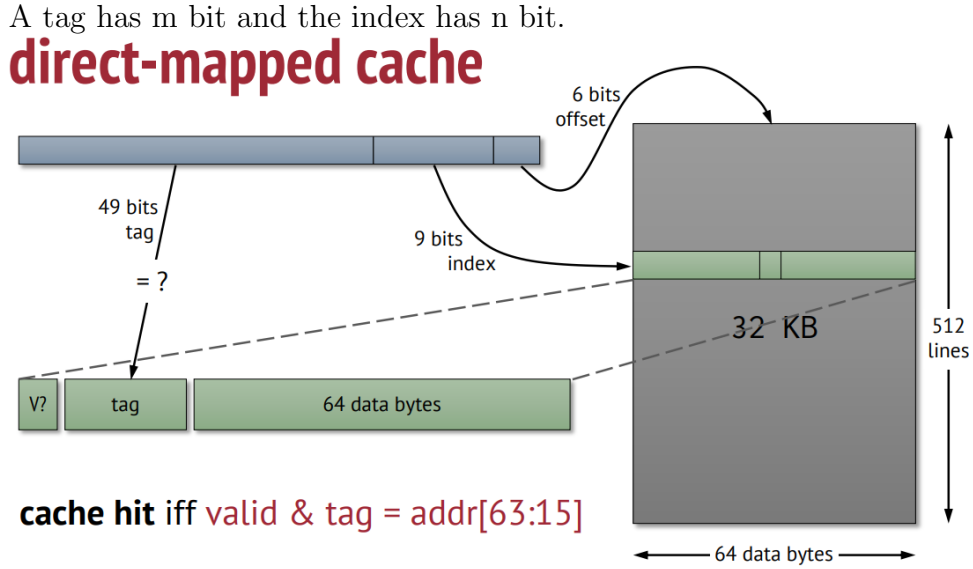

In a direct-mapped cache, a conflict occurs when multiple memory blocks from the main memory map to the same specific cache slot or line.

Set-associative Cache

IDEA: use cache index to select **set** of blocks. Each set is like a fully associative cache.

2 way = 2 blocks. 4 way = 4 blocks.

Use the index to search in sets. It is harder to conflict. Needs more data than the # of ways to conflict.

Reuse distance

$$\text{reuse distance} = \#\text{ of unique other blocks at this point}$$

For example, the reuse distance for A at "ABBCBCCDBBEDBBBA" is 4 since there are 4 **unique** blocks before it.

Replacement policy

An algorithm is used to decide which block to evict.

Some ideas for choosing **replacement victim**

- random (Better than you would expect!)
  - Select victim uniformly at random
  - Pros: do not need to remember anything!
- least frequently used (LFU)
- least recently used (LRU)
  - Timestamp per cache block
  - Mark the ones to '1' when re-referenced. If all get '1', flip them all to '0'.
  - When choosing one to evict, choose the ones with '0'.

The 3 Cs (3 types of misses)

- Cold start misses
  - first time a block is accessed
  - increasing size or associativity does not help
  - can increase the block size
- Capacity misses
  - access would not be a miss if the cache were infinite
- Conflict misses
  - set size ¡ number of accesses that map to given set
  - access would not be a miss if the cache were fully associative

Cache Performance Impact

Miss-oriented Approach to Memory Access:

$$CPUtime = IC \times \left(CPI_{Execution} + \frac{MemAccess}{Inst} \times MissRate \times MissPenalty \right) \times CycleTime$$

$$CPUtime = IC \times \left(CPI_{Execution} + \frac{MemMisses}{Inst} \times MissPenalty \right) \times CycleTime$$

- $CPI_{Execution}$ includes ALU and Memory instructions

Separating out Memory component entirely

- AMAT = Average Memory Access Time
- CPI_{ALUOps} does not include memory instructions

$$CPUtime = IC \times \left(\frac{AluOps}{Inst} \times CPI_{AluOps} + \frac{MemAccess}{Inst} \times AMAT \right) \times CycleTime$$

$$\begin{aligned} AMAT &= HitTime + MissRate \times MissPenalty \\ &= (HitTime_{Inst} + MissRate_{Inst} \times MissPenalty_{Inst}) + \\ &\quad (HitTime_{Data} + MissRate_{Data} \times MissPenalty_{Data}) \end{aligned}$$

Victim cache

Victim cache is a small fully associative cache that stores **recently evicted** lines.

- On evict, place in the victim cache
- If hit in victim cache, place back to normal cache
- Managed similarly to normal cache. E.g., LRU
- Adds some extra associativity for some busy lines.

Types of writes that hit in the cache

- Write-Evict:
  - The data is directly written into the memory, then the corresponding cache line would turn the valid bit to 0 so that it could be evicted later.

  - Might be good for multicore.

- Write Through:
  - Write the new data into the memory and the corresponding cache line.
  - Will be good if need multiple visits of the same cache line.

- Write back:
  - Only writes to the cache, memory only gets the data when evicted from the cache
  - Since only writing to cache, it is much faster.
  - However, for multicore, other cores might need to fetch inside a different core's cache to find the right data, which could be even slower.

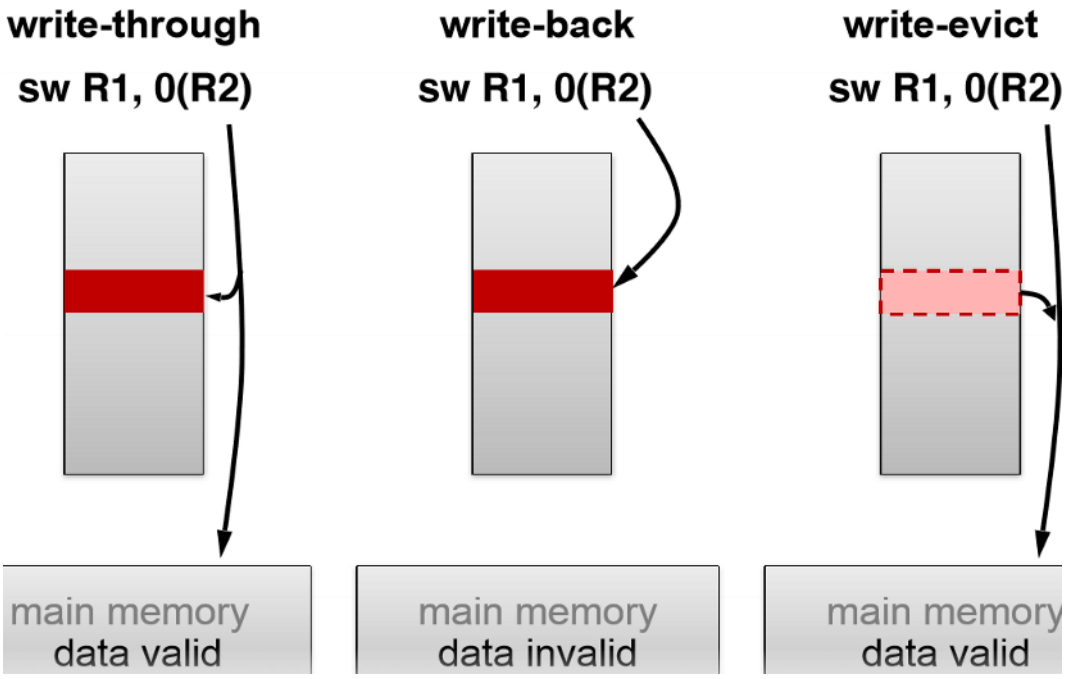

Types of writes that misses in the cache

- Write-allocate:
  - The corresponding memory block is loaded into the cache, then we write to the cache. So read then write.
  - Appropriate when subsequent accesses to the same block are likely (exploits temporal locality)
  - Can result in unnecessary reads for write operations if the entire block is not going to be used.

- Write-no-allocate
  - Write is performed directly to the main memory without loading to the cache. So no read.
  - Reduces cache pollution by avoiding unnecessary reads.
  - More suitable for writeintensive workloads where reads of recently written data are less likely.
  - Not able to take advantage of spatial locality
  - Inefficient use of cache when read is following write

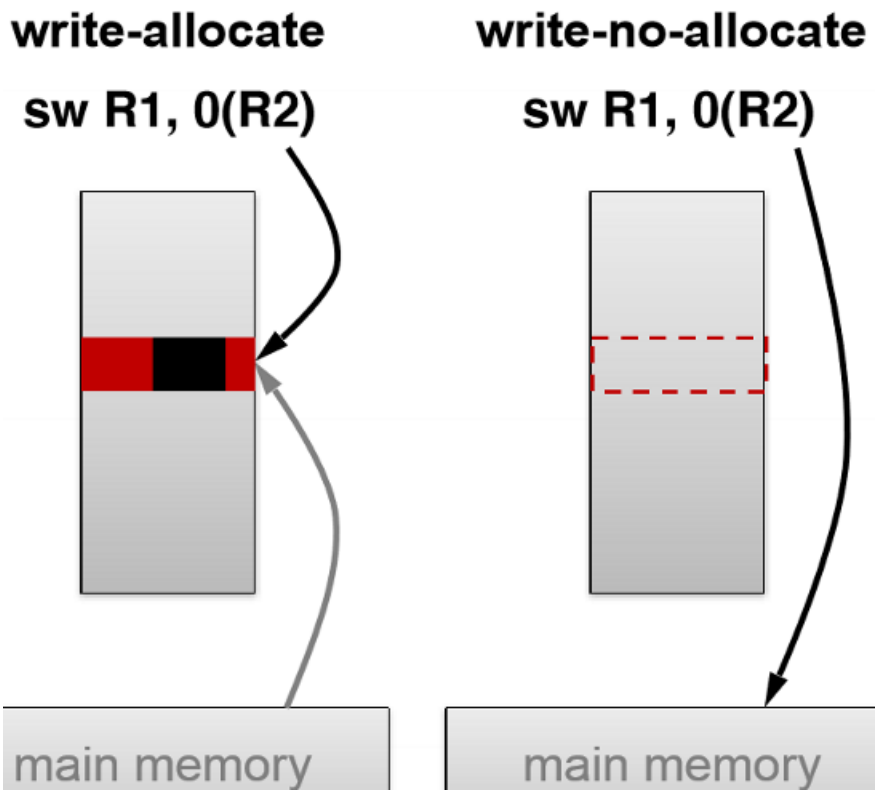

Evictions in a cache hierarchy

- inclusive
  - Lower-level caches contain a superset of the data present in higherlevel caches.
  - E.g., if present in L1, present in L2
  - Increased storage requirements since stored in multiple cache.
  - Fetching is simple since only need to check one level.
- exclusive

  - Each cache level contains a disjoint set of data. No duplicates on different levels.
  - No redundancy so saves storage.
  - May result in higher miss rates especially if data frequently migrates between cache levels.
  - Need to search all cache to find the data.

- non-inclusive
  - Non-inclusive caches are also known as non-inclusive, non-exclusive or sometimes as set-associative caches.
  - It is unknown if each level has unique or shared data.
  - Compromise between storage efficiency and simplicity in coherence management.

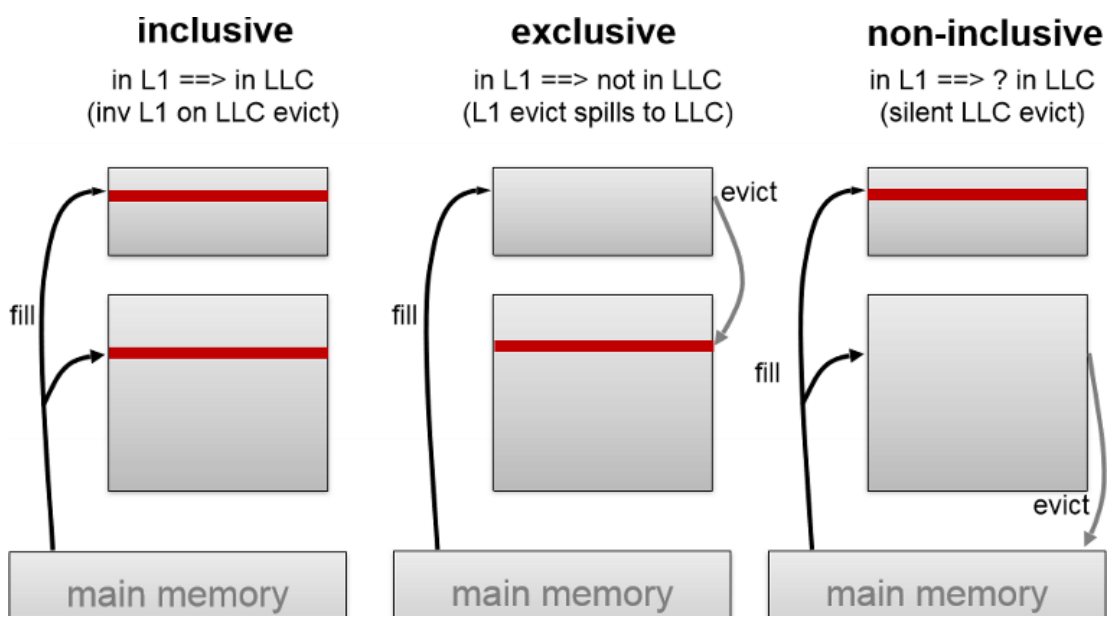

Read and Write

When do you cause memory to write?

load: reading data from memory

store: writing data to memory

When you load and there is a dirty/modified line, then you write that line to the memory and then load it.

When you store, we evict a cache line which can welcome a memory read.

L1 Separating instruction and data

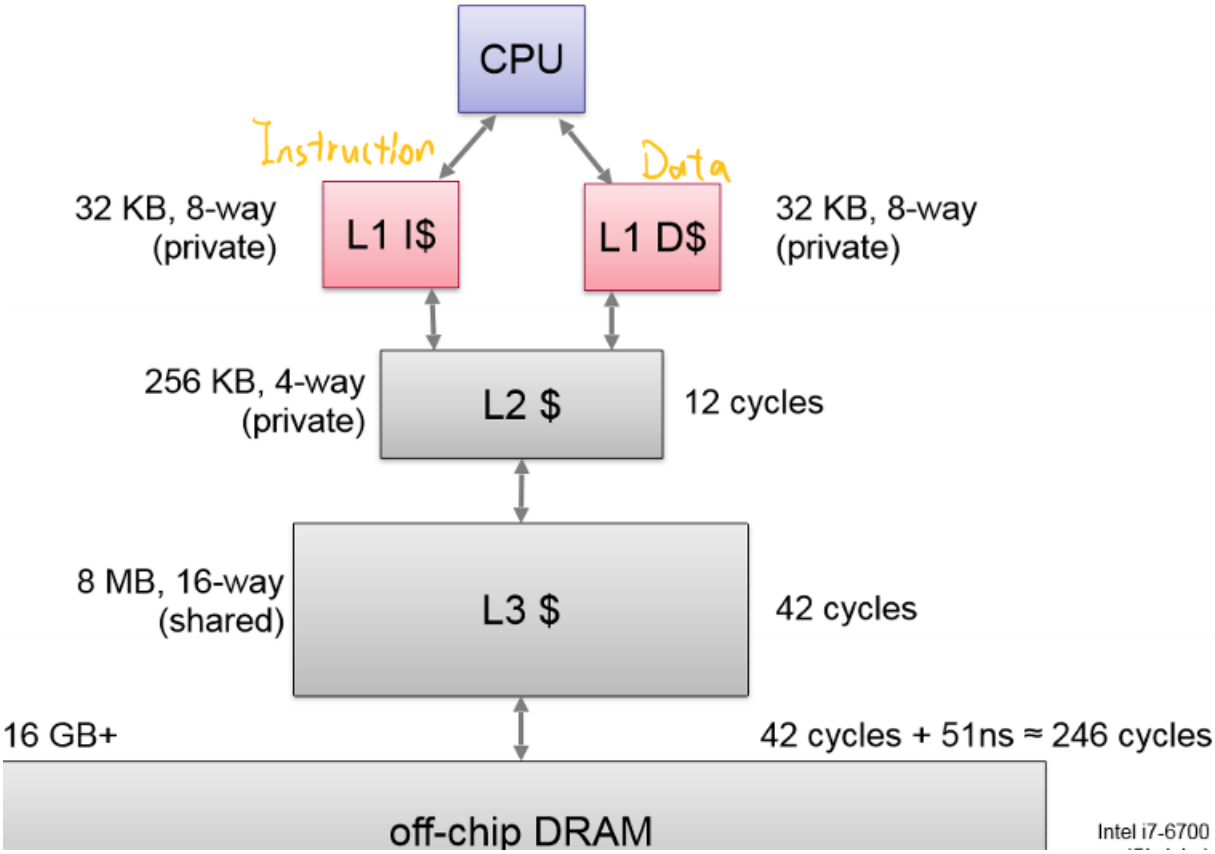

We separate instruction and data in L1 because:

- Reduce latency in instructions so that there are no instruction load stalls.
  - Instruction stall, also known as pipeline stall or pipeline bubble.
  - Wastes CPU cycles.
  - Instruction pipelines are designed to process multiple instructions simultaneously by breaking down the instruction execution into stages (fetch, decode, execute, etc.). Stalls disrupt the smooth flow of instructions through these stages, leading to a reduction in the overall instruction throughput. This directly impacts the performance of the processor.
- Avoid friendly fire: if together, data accesses might evict the program's instructions.

Lookup-free cache. MSHR

MSHR = Miss Status Handling Register.

MSHR is a data structure or a set of registers within a cache controller that keeps track of the status of cache misses. When a processor issues a load or store instruction

and encounters a cache miss, the MSHR helps manage the process of fetching the missing data from the next level of the memory hierarchy (usually main memory) and updating the cache.

- MSHR keeps track of the cache misses that are currently in progress. Each entry in the MSHR corresponds to a pending cache miss. This allows the cache controller to manage multiple concurrent misses effectively
- MSHR stores information about the memory address that caused the cache miss. This information is used to identify and match incoming data when it returns from main memory.
- MSHR also holds a *Data Buffering* to store the incoming data associated with a cache miss. It holds the data till it can be written to the cache.
- This way, it groups all data going to 1 line and sends only 1 request.

Prefetching

Prefetching is a technique used in computer systems to improve memory access performance by fetching data into a cache or main memory before it is actually needed by the processor. The goal of prefetching is to reduce the latency associated with memory access, especially in situations where the processor is likely to encounter cache misses.

- Use patterns usually to observe the next memory access
- Hardware Prefetching: Modern processors often have dedicated hardware units that analyze memory access patterns and automatically issue prefetch requests to fetch data into the cache.
- Software Prefetching: programmers or compilers can also insert prefetch instructions or hints in the code to suggest which data should be prefetched. However, this requires a good understanding of the program's memory access patterns.
- Sequential Prefetching: Predict that the processor will access contiguous memory locations. Effective for loops or linear data access patterns.
  - Stream buffer: buffer sequential access stream. maybe several buffers for multiple streams.
  - if hit in stream buffer, move the whole buffer to cache.
  - However, if the next fetch jumps, then it does not work.
- Stride Prefetching: Predict the stride (the constant difference between consecutive memory addresses) and prefetching data at regular intervals. Beneficial for non-contiguous but predictable memory access patterns.

- Track previous address, stride, correctness.
- if predictions confirmed, keep prefetching:
- An FSM approach:
- 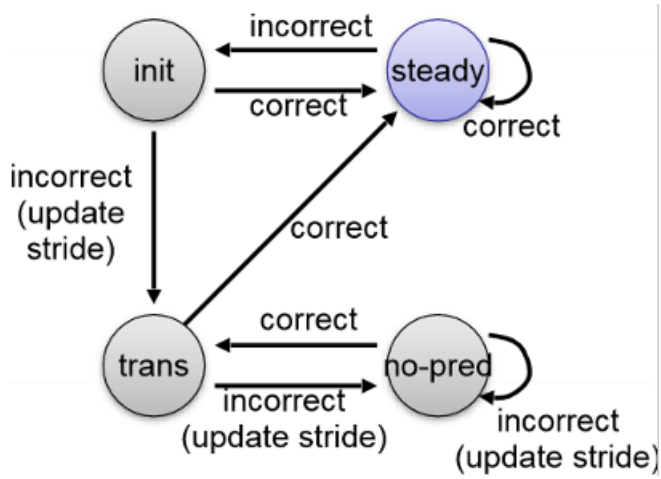

- An example flow chart:
- A stride prefetcher has an FSM and is initialized as shown below
The observed access sequence is
4, 8, 12, 16, 10, 20, 30, 40
How many will be prefetched? How many are correct/incorrect?

prev	stride	state	prefetch
0	0	init	—
4	4	trans	—
8	4	**steady**	12
12	4	**steady**	16
16	4	**steady**	20
10	4	init	—
20	10	trans	—
30	10	**steady**	40

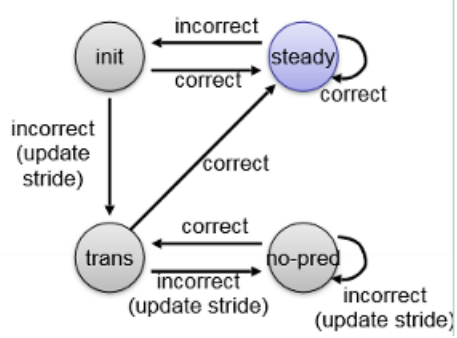

- Stream Prefetching: Similar but more adaptive to Stride. It dynamically adjusts the prefetch distance based on the observed memory access behavior.
- Prefetching pros and cons:
  - Reduced memory latency.
  - Imrove memory subsystem throughput, allowing the processor to continue executing instructions without waiting for memory accesses.

- Enhance cache utilization: Prefetching helps make more efficient use of the cache space by populating it with data that is likely to be accessed soon.
- However not always Beneficial, incorrect prefetching decisions can lead to wasted bandwidth and can cause pollution. If the miss rate is too high, the CPU will turn the predictor off.

Improve Cache Articles:

1. Adaptive Insertion Policies for High-Performance Caching ISCA 2007: This is present in older CPUs:`https://dl.acm.org/doi/10.1145/1250662.1250709`

2. Tree-Based P-LRU (pseudo-LRU) Replacement Policy: This is present in older embedded CPUs. Please read Chapter 3, Section 4 of this document from ARM.

The Wikipedia page gives you a high-level overview:

`https://en.wikipedia.org/wiki/Pseudo-LRU`

3. SRRiP and DRRiP Policies ISCA 2010: This is present in modern CPUs –¿ `https://dl.acm.org/doi/10.1145/1815961.1815971`

4. Signature-based hit prediction MICRO 2011: This is an academic work –¿ `https://dl.acm.org/doi/10.1145/2155620.2155671`

- Victim selection policy: Decides which line gets evicted for storing an incoming line.
- Insertion policy: Decides where in the replacement list the incoming line is placed.

1. LRU: Least recently used. In an LRU cache, data is stored in a limited-sized cache memory, which can hold a fixed number of items.

   Each time an item is accessed or used, it is marked as the most recently used item. This timestamp or marker is typically recorded in a data structure like a linked list or an ordered array.

   When the cache reaches its capacity limit and a new item needs to be added, the LRU algorithm identifies and evicts the least recently used item from the cache.

   LRU is designed to optimize cache usage for scenarios where some items are accessed much more frequently than others.

   One notable drawback is that it requires maintaining a record of the access order, which can be memory-intensive.

   Also, it might not be good when access patterns change suddenly or there are hot items that are very frequently accessed, which can cause frequent cache evictions.

2. LIP: LRU Insertion policy. Instead of placing all incoming lines into MRU(Most recently used), they are all put into LRU and only prompted to MRU if they get referenced while in the LRU position.

LIP prevents thrashing for workloads that reuse a working set greater than the available cache size.

However, LIP may retain the lines in the non-LRU position of the recency stack even if they cease to be re-referenced. Since LIP does not have an aging mechanism, it may not respond to changes in the working set of the given application.

3. BIP: Bimodal Insertion Policy. Similar to LIP except that it infrequently (with a low probability) places some incoming lines into the MRU position.

   BIP is regulated by a parameter, bimodal throttle parameter ϵ, which controls the percentage of incoming lines that are placed in the MRU position.

   Both LRU and LIP can be seen as a special case of BIP with $\epsilon = 1, 0$ respectively.

4. Dynamic Insertion Policy BIP(DIP) Dynamically estimates the number of misses incurred by the two competing insertion policies (BIP and LRU). Select the policy that incurs the fewest misses.

   The simplest way is to implement LRU and BIP in two extra tag directories and keep track of which of the two policies is doing better. The main target directory of the cache can then use the policy that incurs the fewest misses.

   The figure below demonstrates the working of DIP. Let MTD be the main tag directory of the cache, The two competing policies LRU and BIP are each implemented in a separate Auxiliary Tag Directory (ATD). Both ATD-LRU and ATD-BIP have the same associativity as the MTD. The access stream visible to MTD is also applied to both of them. A saturating counter, which we call *Policy Selector* (PSEL), keeps track of which of the two incurs a few misses. All operations on PSEL are done using saturating arithmetic. A miss in LRU increments PSEL and a miss in BIP decrements PSEL. The most significant Bit (MSB) of OSEL is an indicator of which of the two policies incurs fewer misses. If MSB od PSEL is 1, MTD uses BIP, otherwise LRU.

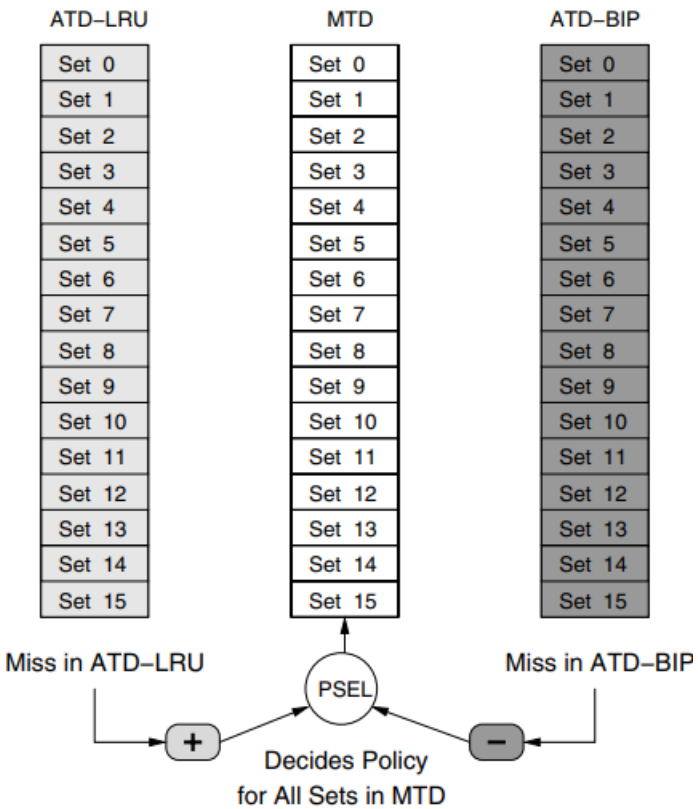

However, it does require two more ATDs which can be troublesome. So instead, we introduce **Set Dueling:**

Set Dueling dedicates a few sets of the cache to each of the two competing policies. The reset sets are follower sets that use a policy that incurs fewer misses on the dedicated sets.

This kind of DIP is called *DIP-SD*

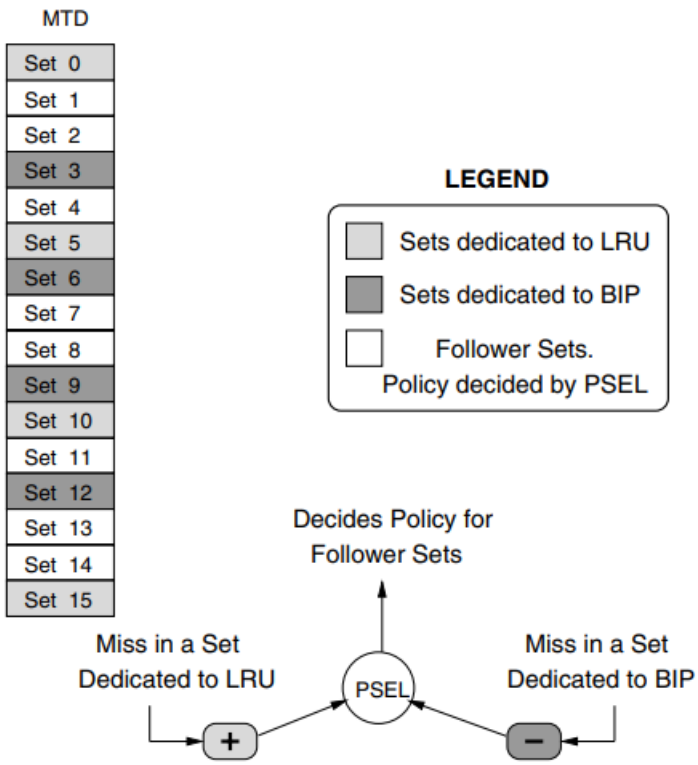

A miss in LRU sets increments PSEL whereas a miss in BIP decrements PSEL. If the MSB of PSEL is 0, the follower sets use the LRU policy. Otherwise, the follower uses BIP.

4 Virtual Memory

A brief intro to why virtual memory:

Problem: The operating system needs to multitask (time-multiplex)

- But all programs assume address space starts at 0
- Enough physical RAM to run one program but not enough to fit all of them at once.

Solution: separate address space per program

- Each program has a separate address space ID (ASID)
- Program executes using virtual addresses (VA) so that the program thinks it has all of the memory.
- CPU and OS translate to physical address (PA)
- Same VA with different ASID would map to a different physical address.

Paged virtual memory

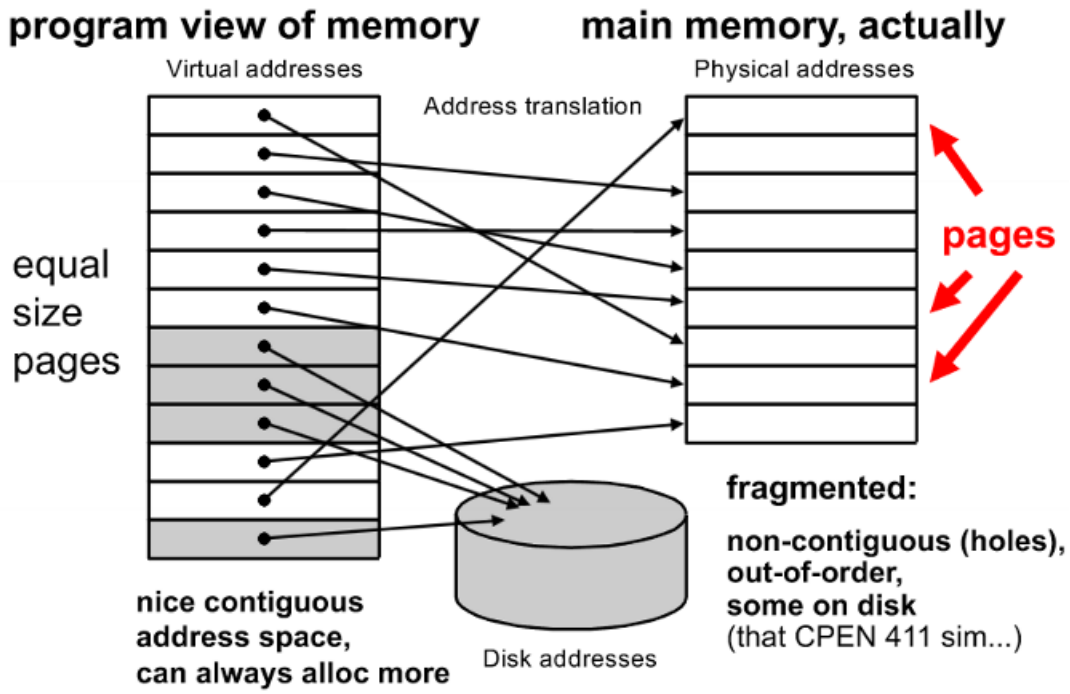

Divide the address into pages. Map used ones into a physical address in memory. Leave the rest in Disk.

The physical address is translated from VA by OS. Offset is the byte address of a byte in a page. So size of page can be determined as $2^{\text{offset bit}}$

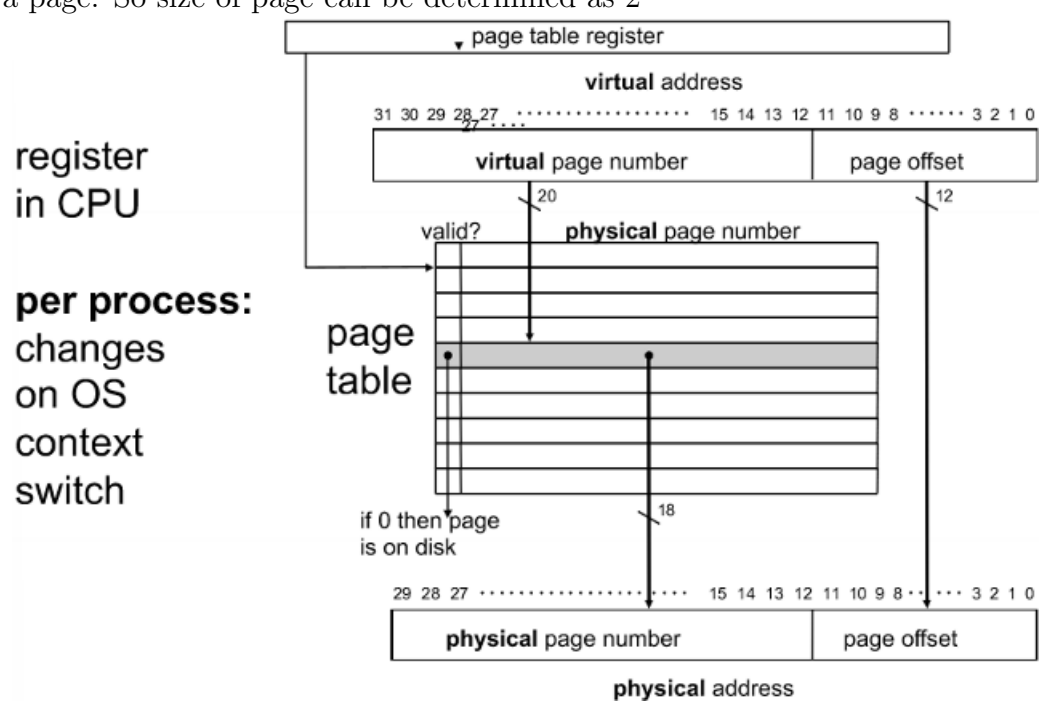

Page table register is used to map. The valid bit in it indicates if it is on the disk or in

the memory. if (valid == 0) on disk.

The address of the virtual page number in the page table register holds the physical address.

The size of the table depends on the bit number of the virtual page number since the page table should cover all of the virtual pages.

For example, for a nbit virtual address and mbit page offset, the virtual page number is (n-m) bit. So the number of entries for the table is 2^{n-m}

For programs that use virtual memory, address translation is required for every data mem access and every instruction fetch since it does not have the actual address of data.

Efficiency of page table

Where to put the page table?

- Option 1: on-chip near the CPU (like the L1 Cache)
  - pros: very fast access
  - cons: 1 M entries size >> any reasonable L1 cache
- Option 2: off-chip in main memory
  - pros: size might not be a problem.
  - cons: access is very slow (We need 2 access for each instruction)
  - cons: per-process tables still have lots of memory.

Observations in real programs:

- Each process needs its own page table. 100s-1000s processes could easily be active.
- Page tables are sparse: few programs use the entire address space.

Solution: Multi-level page tables (a.k.a hierarchical page tables). Instead of using a single, flat table to map virtual addresses to physical addresses, a multi-level page table divides the task into multiple levels of tables, forming a hierarchy.

- Depending on the number of levels, higher-order bits are used as an index in the first-level page table.
- The entry in the first-level page table points to the second-level page table.
- The lower-order bits are used as an index in the second-level page table, which contains the final page frame information.

Benefits:

- Space Efficiency: reduce the amount of memory needed for the page table, especially when dealing with sparse address spaces where not all address space is in use.
- Flexibility: Different levels of the page table hierarchy can have varying sizes, allowing for flexibility in optimizing memory usage.

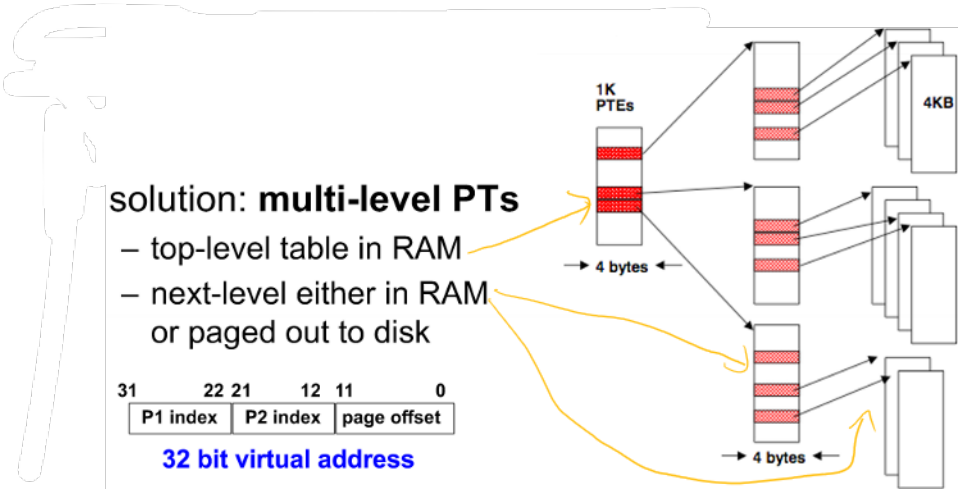

Translation-related exceptions

- Page faults:
  - page is accessible, but it is sitting on disk. It happens all the time!
  - This is not a program error!
  - resume instruction execution once a page in RAM.
- Segmentation fault/ general protection fault
  - page is not user-accessible
  - page is R/O (read-only) but it tries to write/execute.
  - program terminated (unless caught)
  - Meltdown avoided this by misspeculating.

Translation Lookaside Buffer (TLB)

VA to PA translation is needed for every memory access. Lookup in big multi-level page tables is really slow.

We use TLB, which is a small cache for the most frequently used virtual page number (VPN) to physical page number (PPN) lookups.

- If hit, saves a lot of cycles.

- If miss, engage page table walker to look for it.

Upon page fault, we evict the old page and bring in the new page. When switching to a different program, we need to flush TLB since it is in a different virtual address space.

Types of address translation

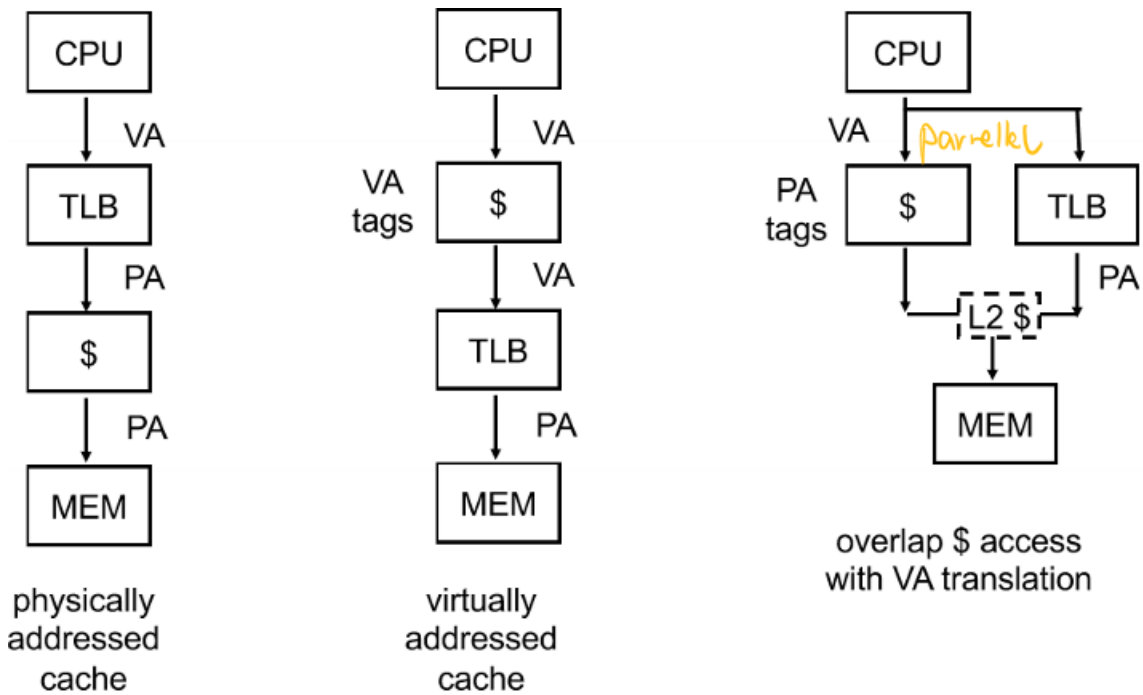

- Physically addressed cache: If hit in TLB, directly translate VA into PA and access it. Else, look into PTE mem.
- Virtually addressed cache: The cache only contains the VA of one program. Then we can go from the cache if miss then TLB then mem. Otherwise PTE.
- Overlap is obviously the fastest. But the structure needs some special arrangement.

Increasing the size of the L1 cache would also increase the misses due to flushing VA L1 caches:

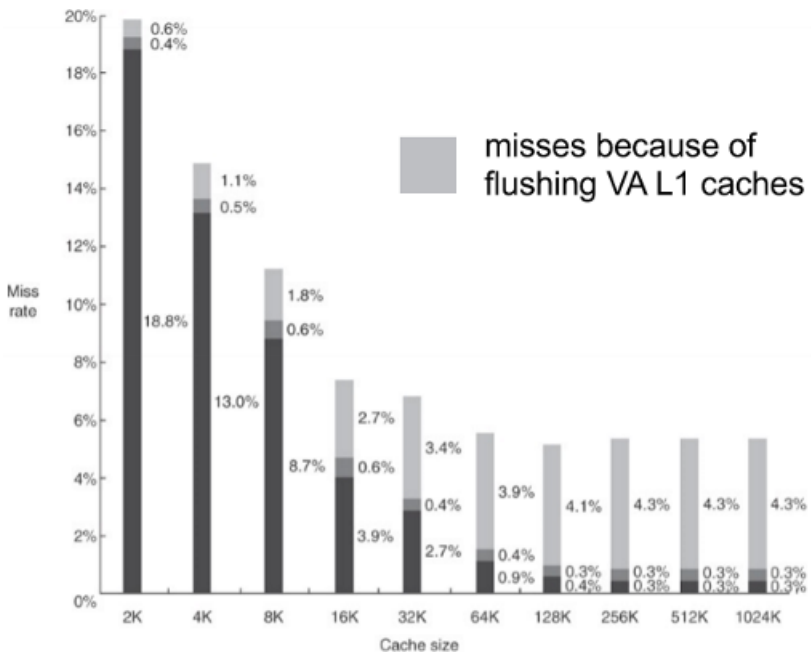

Overlapping TLB and L1 cache accesses

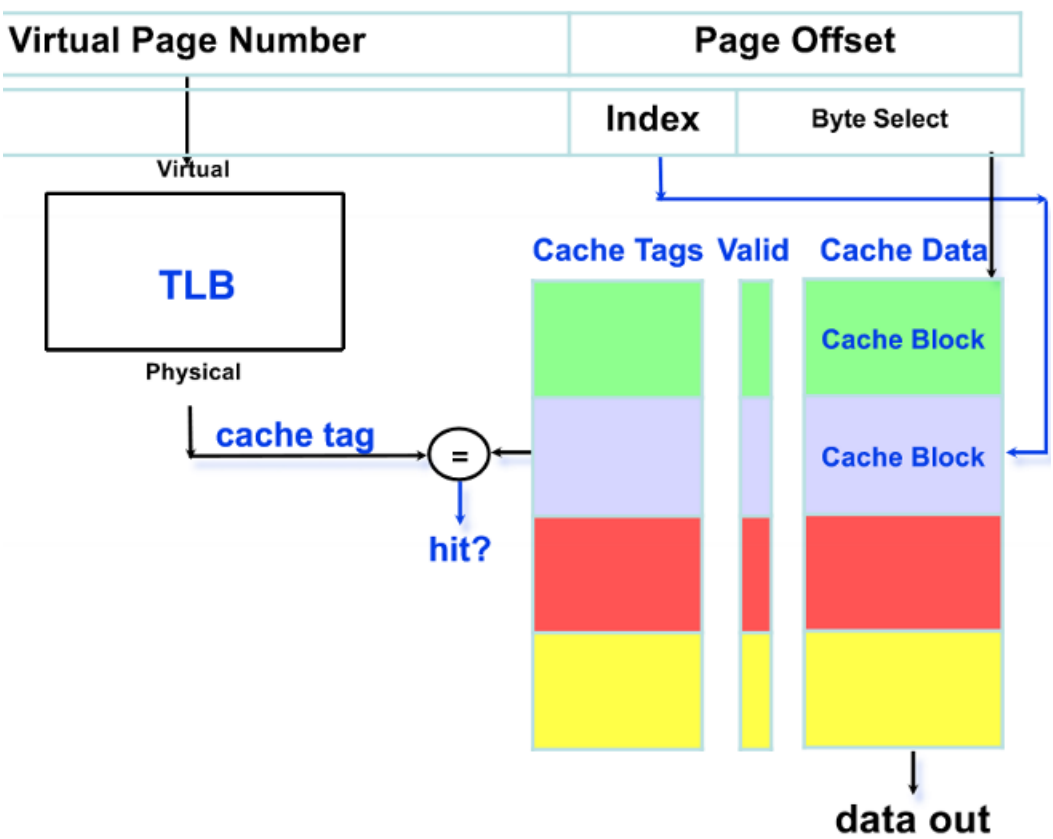

Example problem:

Suppose pages are 4KB. D cache is 2way set-associative maximum cache size?
Page = 4kb = $2^{12} \implies$ set = 6bit = 2^6 and byte = 6 bit = 2^6.
Set associativity is 2: size = $set \times associativity \times byte = 2^6 \times 2 \times 2^6 = 2^{13} = 8$KB.

VA to PA and synonym problem

Problem: some address bits change when mapping VA to PA because the page is larger than the page offset compacity. For example, the index of 7 bits is the offset of 6 bits but your page offset is 12 bits only. Possible solutions:

- bigger page sizes. (Increase the page offset to be 13)
- more associativity. (Allow a 2way associativity)
- Make sure the VA keeps the extra index bit the same as before. So maybe there is only half of VA that it is allowed to get in. (Hard to do when there are more bits needed to keep the same)
- synonym problem

Synonym problem example:
We have a 64KB direct-mapped cache and 16-byte blocks.

- total length is 16 since 2^{16}bit=64KB
- block offset is 4bits, so addr[3:0]
- The reset is cache index, addr[15:4]

If we only have a 4KB page, then each address of the page corresponds to $\frac{64}{4} = 16$ other cache. So 16 synonym locations for every physical address.

5 Pipelines

Let's look at a simple pipelining structure.

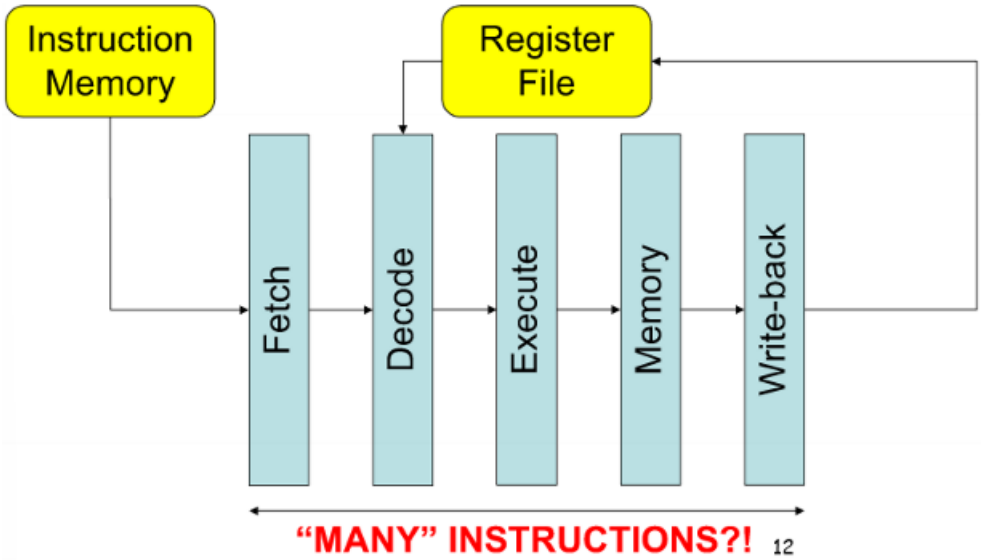

Each stage is a pipeline register. We do one thing at one stage.

However, flip-flops have latency. So we cannot divide too many stages since the charging latency of flip-flop limits it.

Ideal pipeline:

- Uniform subcomputations: each stage has the same delay, achieved by balancing pipeline stages.
- Identical computations: each computation uses the same number of stages.
- Independent computations: start a new computation each cycle.

Dependency

A problematic pipeline:

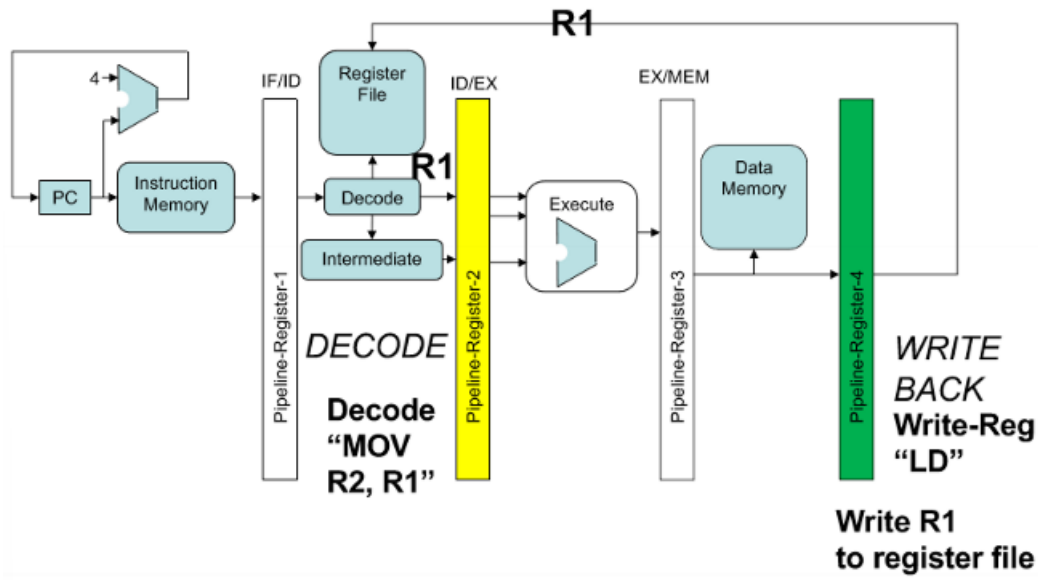

Take a closer look at LD and MOV instruction

If we are supposed to read the written R1 before decoding it, then the R1 value read before it is a "stale value".

So reading the value depends on the previous instructions. Need to make sure you can access the meaningful value after the previous instruction stores it.

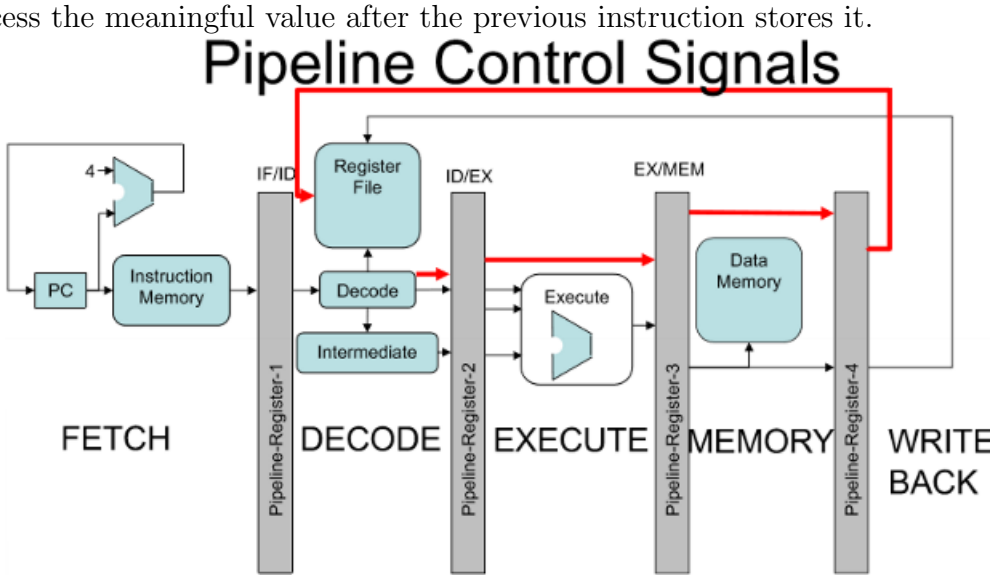

We use the signals that go along with the instructions. The signal can stall the pipeline so that we can make sure the value is meaningful.

Hazards

	Clock Number								
	1	2	3	4	5	6	7	8	9
ADD R1, R2, R3	IF	ID	EX	MEM	WB				
SUB R4, R1, R5		IF	ID	EX	MEM	WB			
AND R6, R1, R7			IF	ID	EX	MEM	WB		
OR R8, R1, R9				IF	ID	EX	MEM	WB	
XOR R10, R1, R11					IF	ID	EX	MEM	WB

- R1 is the destination of the ADD instruction.
- R1 is also the source of the rest of the instructions.
- R1 introduces dependencies which causes **Hazards**
- In **Cycle 3 and 4**, we need the value of R1, but R1 is updated in **Cycle 5**!
- Everything at or after cycle 5 is ok.

There are three types of hazards

- Structural Hazards
- Data Hazards
- Control Hazards

Structural Hazards

Caused by resource conflicts:

- Two or more instructions want to use the same hardware at the same time.
- E.g., fetch the instruction and write to memory at the same time, but you can execute one instruction at a time.
- One solution is to stall it and wait for the earlier instruction to finish using the resource.
- The other solution is to add more hardware so that multiple instructions can be executed at the same time.

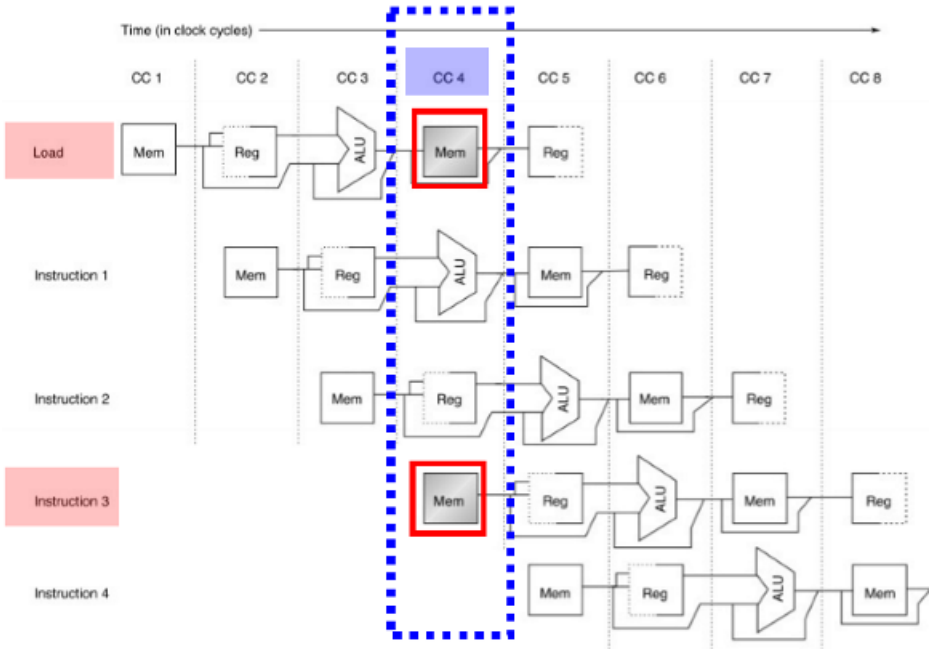

Example:

So in this example, both instructions want to access the memory at the same time. The solution is to stall the later instructions.

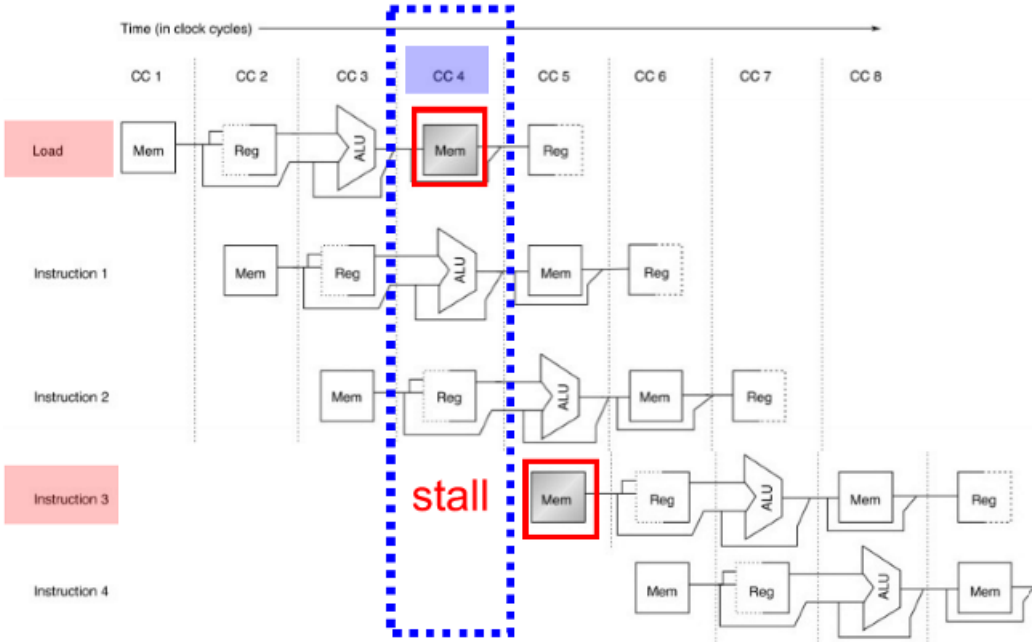

Data Hazards

1. Read after write (RAW) hazards: Note the data dependencies of the following instructions:

```
ADD  R1, R2, R3
SUB  R4, R1, R5
AND  R6, R1, R7
OR   R8, R1, R9
XOR  R10. R1. R11
```

The solution to it is **Forwarding**: Sending the data to the next execute stage as it is in CPU before writing back.

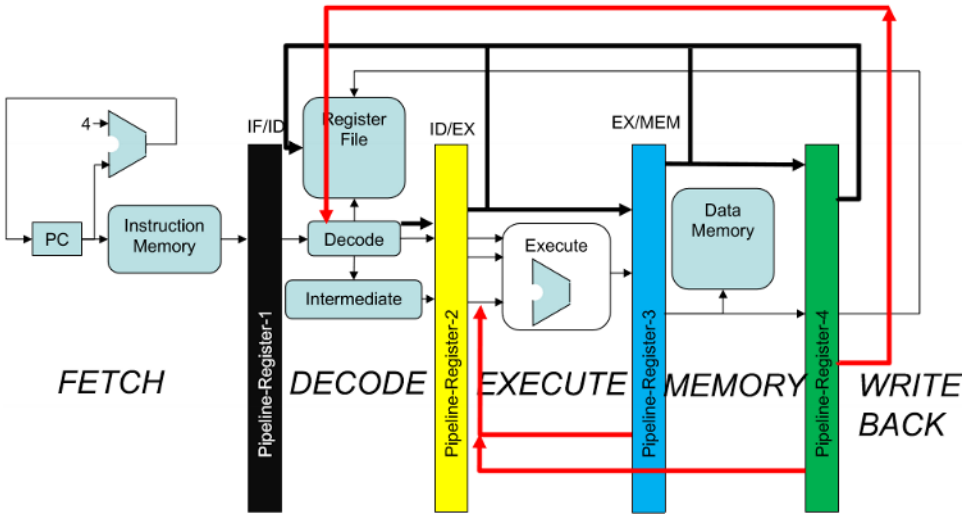

By adding a mux for all the next stages it is possible for it to forward the data into the next instruction ALU. These muxes are called **Forwarding Mux**

2. Write after write (WAW) hazards:

   An example is "ADD R1, R2, R3" then "SUB R1, R2, R4".

   For this case, we can simply ignore the first line since it will be overwritten anyway, which does not cause any problems.

3. Write after read (WAR) hazards:

   An example is "ADD R1, R2, R3" then "SUB R2, R4, R5".

   Just use a temporary register to keep the value you need to write to R2 or change to a different register selected by the CPU. Not a big deal.

Control Hazards

Control Hazards are due to branches. The branch may or may not change program counters (PC). So which instruction should follow a branch depends upon the result of executing the branch instructions.

The pipeline can only choose one branch to continue. If not correct, then the execution is wasted.

- Option 1 is to stall it. Wait for you to know the branch value before continuing.
- Option 2 does branch prediction: Branches tend to be "weakly biased" meaning that they are taken and not taken roughly the same number of times. So half of the time, we might be right! So now we need a way to correct the behavior if predicted wrong.

  If correct, we know by the end of the branch instruction, and we are happy, so nothing we need to do.

  If not correct, at the next cycle, we need to fix all the incorrect predictions. Squash incorrectly fetched instructions (discard) and start fetching correct instructions.
- Option 3 is to delay branches:

  Here is some compiler optimization that can be done.

  Place useful instructions after branch instructions if possible.

  - Put instructions that are before the branch that the branch is **not dependent** on. And it should always improve the performance.
  - If from branch target: Must be OK to execute if the branch is not taken and improves the performance if it is taken.
  - If from fall through: Must be OK to execute if the branch is taken and improves the performance if it is not taken.

Dependencies

Define dependency: Two instructions use the same register or memory location but no data passes between them. Dependency is on data location (name), not value (contents at location).

1. True dependency and RAW hazards: A true dependency leads to a 'RAW' hazard if the hardware can perform the read before the write.

	Clock Number					
	1	2	3	4	5	6
DADD x1,x2,x3	F	D	X	M	**W**	
DSUB x4,x1,x3		F	**D**	X	M	W

2. Anti-dependencies and WAR hazards:

```
I: DSUB x4,x1,x3
J: DADD x1,x2,x3
K: XOR  x6,x1,x7
```

   Instructions I and J cannot be reordered, otherwise value will be changed.

   So anti-dependency reuses the names. If anti-dependency causes a hazard in the pipeline, it is called a WAR hazard.

3. Output dependency and WAW hazards:

```
I: DSUB x1,x4,x3
J: DADD x1,x2,x3
K: XOR  x6,x1,x7
```

   Instructions I and J cannot be reordered, otherwise value will be changed.

   So it also results from the reuse of the name. If an output dependency causes a hazard in the pipeline, it is a WAW hazard.

pipelined function units

So the ALU or the execution unit might not always be the same length.

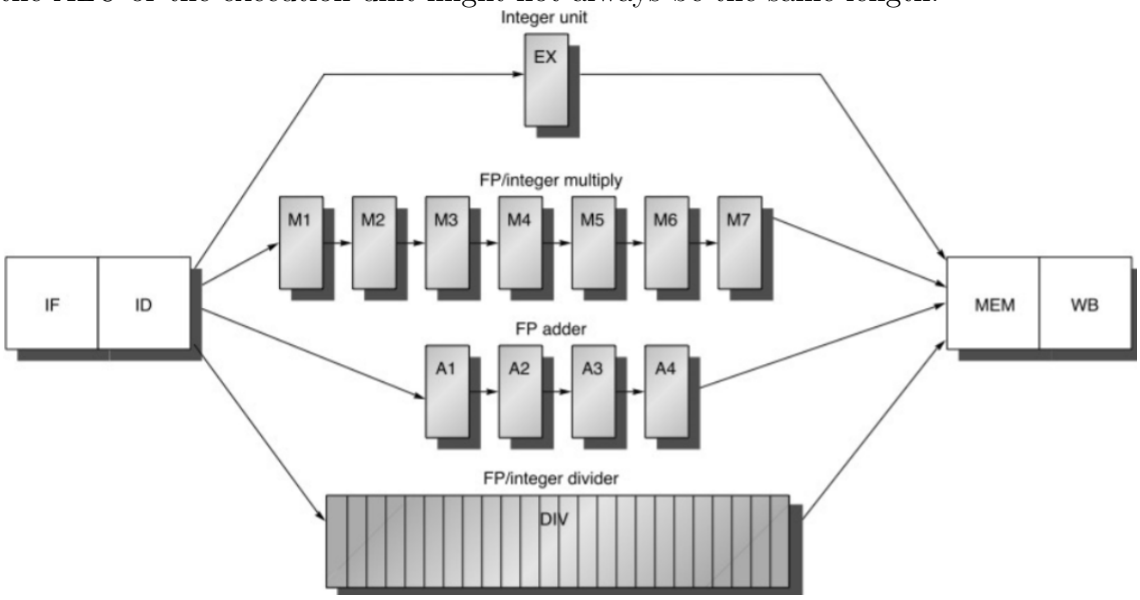

So it brings up more challenges:

- Longer RAW hazards. (Might need to wait for longer so that you can read the executed value)
- Structural hazard for MEM, WB. (might have multiple requests to access them at the same time.)

scoreboard: tracking register accesses

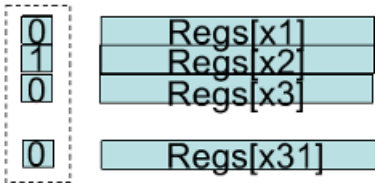

For each reg, track "will be written to by in-flight instruction" info.

- **Set bit** for destination register at end of **decode**.
- **clear bit** when instruction **reaches writeback**.

So if new instruction **reads or will write** a register with the bit set, stall in the decode stage.

So for a "in-order" scoreboard execution:

- scoreboard: a bit-array, 1-bit for each GPR(General Purpose Register) if the bit is not set: the register has valid data. If set: the register has stale data. Some in-flight instruction will write them.
- issue inorder: For example: (SB stands for scoreboard)

  RD ← Fn(RS,RT)

  - if (RS.SB()||RT.SB()) RAW.stall();
  - else if (RD.SB()) WAW.stall();
  - else, dispatch to function Fn and set RD.SB to 1;

For compelte out-of-order: Update GPR[RD], clear RD.SB();

Register Renaming

Note that WAW and WAR come from name dependency which can be solved if there are infinite supply of names.

Tomasulo algorithm

Hardware

There is a reservation station in front of each functional unit(FU). FU is a buffer that stores instructions waiting for operands.

- Registers in instructions renamed to tags.
- Destination register gets fresh tag: mapping to reg. alias table (RAT)
- Spirce register gets corresponding tags from RAT
- Track data dependencies directly: no WAW or WAR hazards

Results broadcast on **common data bus** (CDB). Each result carries the tag of source RS when it is produced. All register stations (RS) and register files (RF) listen to the CDB for tages they want values for and pick up corresponding values on CDB.

Stages

- issue
  - If have a free RS (no structural hazard), allocate RS entry
  - lookup source operand registers in RF: get either values or tags. (Get value if available, otherwise, need tags since waiting for value)
  - Rename destination register to allocated RS entry tag.
- execute
  - Listen for unready operand tags on the CDB, pickup values.
  - Once all operands are ready, commence execution.
- write result
  - Broadcast <dst tag, result> on the CDB
  - Interested RSs and RF will see the tag and update the value
  - Mark reservation station available

6 In-order commit and multiple issue

The problem arises from the difference between completion and commitment:

- Complete: Executing unit has finished executing the instruction
- Commit: Update the value in the register file

So if we design our CPU that commits and completes at the same time as how simple Tomasulo algorithm states, RF will be updated at the same time as completion. However, might need to discard some values if we found some exceptions in completion. This means there might be some that we should not update into the RF.

Why would we flush the pipeline? Exceptions!

- Mispredicted branch
- External interrupt (key press)
- Program fault (div. by 0, segfault)
- Trap (debugger breakpoint)
- OS context switch (timer)

- Page fault (unmapped virtual address)

All above are called exceptions. For each exception that we detected at **execution time,** it requires **transfer of control** to an OS interrupt service routine. Then we may need to **resume the original program** as if nothing happened.

Precise exceptions

If an architectural state is updated by **all instructions before faulting instruction** and **none** after (and including) faulting instruction, then the pipeline supports **precise exceptions**. Note that not all architectures do.

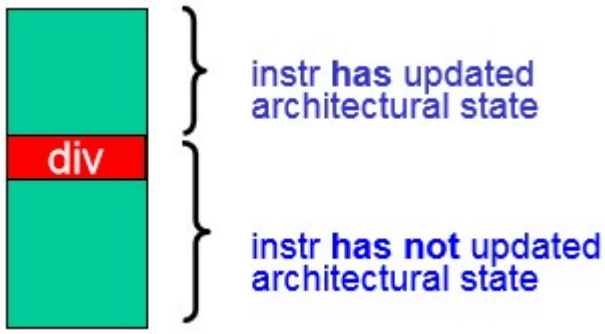

Exceptions in an in-order pipeline

When exception strikes:

1. switch instruction fetch to **exception handler**
2. convert instructions after and including "faulting instruction" to **nops** (e.g., turn off write enable control bits)
3. **remember PC** (program counter) of faulting instruction

Dealing with exceptions without stalling

Speculative Execution

The goal of speculative execution is to support the exception of instructions fetched following a branch prediction before we know if the prediction is correct.

However, the problem is that instructions after the branch should not update the register file before confirming that the branch is correct. Make sure the control/branch hazard is resolved before proceeding.

Speculative execution describes the capacity of the way to **cancel mispredicted path**.

Completion and commit

- Insight: the problem arises in writing to RF, not finishing the computation early.
- Idea: compute and buffer the result but **delay the RF write** until prior instructions guaranteed to retire (not speculative, no exceptions)

Now we can split writeback into **completion and commit**.

- Completion = buffer computed result
- Commit = write result to RF

The recorder Buffer (ROB)

ROB is a process between completion and commit:

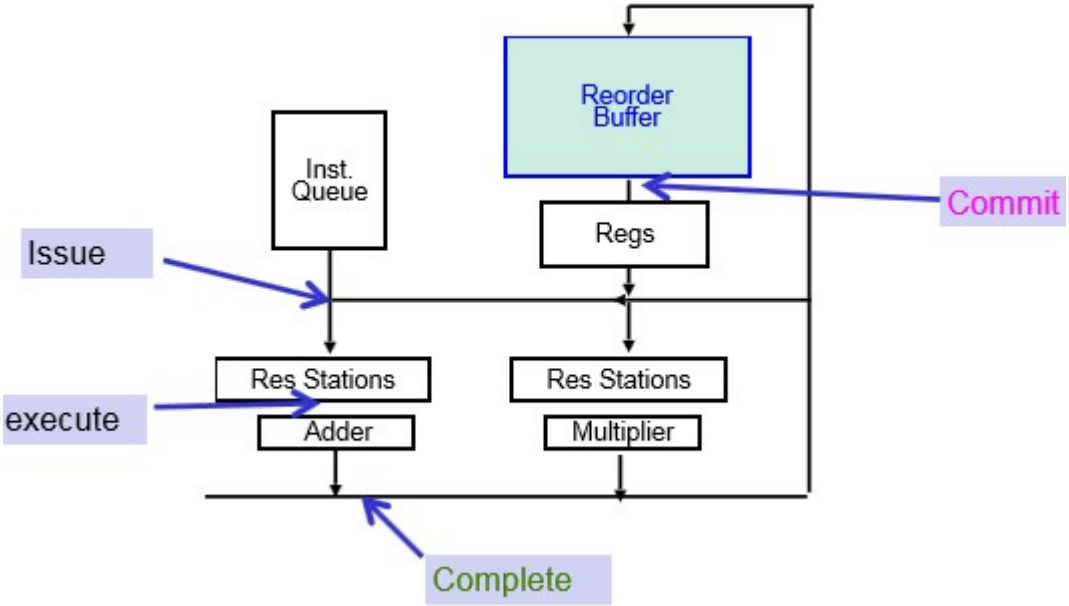

- sores instructions in **program order** (a FIFO)
- **buffers** computed results before RF write
- commits in **program order**

ROB tracks the execution status for each instruction

busy?	sent to FU?	finished?	PC	dst reg	speculative?	valid?	*value*

Depending on if there is a branch it is waiting for, the issue stage allocates RS and ROB entry may or may not:

- use ROB entry to hold computed value
- use ROB entry ID as renaming tag

Superscalar execution

Pipeline CPI = Ideal CPI + Structural stalls + Data hazard stalls + Control hazard stalls.

We know how to remove/reduce stalls: pipelining, forwarding, outoforder execution, speculative execution...

So we also want to reduce the ideal CPI:

- ideal CPI limited by issue rate: 1 instruction per cycle.
- What if we allow more instructions to be executed per cycle?

Stactically Scheduled Superscalar

Issue up to N instructions per cycle. At issue:

- check each instruction for hazards with coissued instructions that are **earlier in program order**
- also against all earlier **instrctions still in execution**

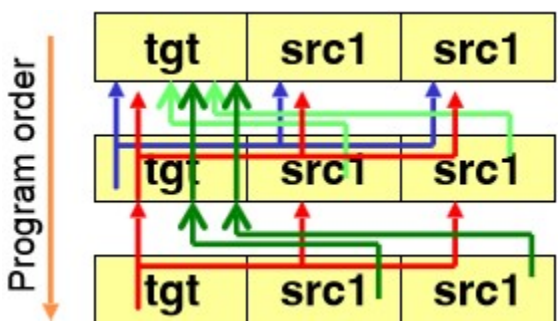

above: comparisons to avoid RAW, WAR, and WAW hazards in a 3wide inorder superscalar.

Red and blue checks for WAW and WAR. Green checks for RAW.

2Issue Inorder Superscalar

	Clock Number							
	1	2	3	4	5	6	7	8
integer instruction	IF	ID	EX	MEM	WB			
FP instruction	IF	ID	EX	EX	EX	WB		
integer instruction		IF	ID	EX	MEM	WB		
FP instruction		IF	ID	EX	EX	EX	WB	
integer instruction			IF	ID	EX	MEM	WB	
FP instruction			IF	ID	EX	EX	EX	WB

So here we have a pipeline for Integer and FP. There are multiple issues with Dynamic Scheduling:

- needs an extension of Tomasulo's algorithm
- key challenge: renames, assign RS, and update pipeline control tables for **for multiple instrcstions**

We can either run this at a higher clock speed or add logic to rename multiple instructions at once.

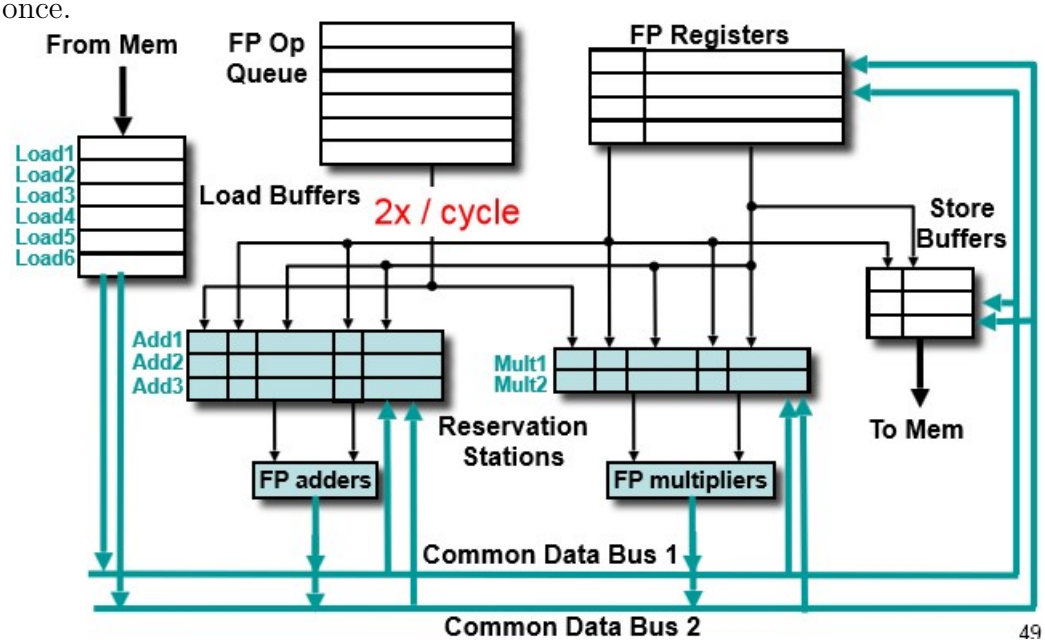

So here, we have two CDBs that can handle two outputs at once. Then we run the load buffer at two times the speed or two assigning per cycle to allow two instructions adding per cycle.

7 Branch Prediction

In branch predictions, we either predict it to be taken or not taken. CPU does not need to execute outoforder to benefit from branch prediction since you always assume your prediction is good.

The main reason for the branch penalty is that we do not know the branch target value when the branch instruction is read from memory. However, we know the historical PC if the branch has been called before, which could be used to predict. So it is possible to predict when the branch instruction is fetched.

When the pipeline is really long, there is a high branch miss penalty!

1Bit Branch Predictor

1bit branch predictor is a cache of 2^{n-1} bits and indexed accordingly. We use the n lower order bits of the PC of the branch to select the index inside the predictor where we store the last outcome. 1 for taken and 0 for not taken.

However, you only update the branch when it is an actual outcome meaning **when the branch is truly resolved**. This means that not only the current branch target is executed, but also the previous branches. If the previous branch is not resolved yet, it is possible that it is wrong even if the current branch target is executed.

2Bit Branch Predictor

To solve the problem that it only keeps 1 previous prediction,

With two bits, we can store up to 4 previous outcomes and predict according to the MSB to reduce the influence of noise or extremes.

There are all kinds of FSM that could produce different results.

Benchmark	Optimal	"Counter"
spice2g6	97.2	97.0
doduc	94.3	94.3
gcc	89.1	89.1
espresso	89.1	89.1
li	87.1	86.8
eqntott	87.9	87.2

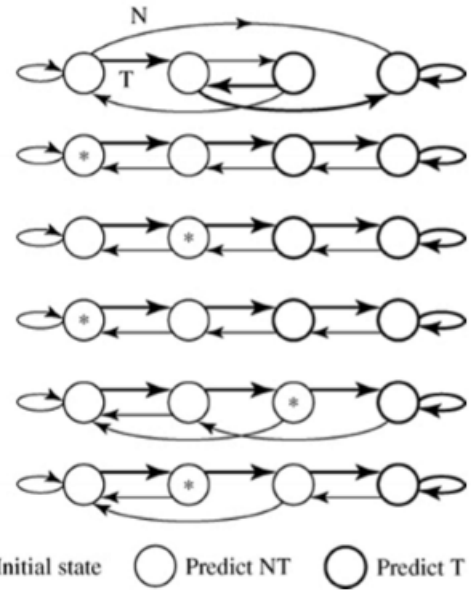

tradeoffs

Note that the size of the predictor is usually limited since it needs to sit very close to the CPU to reduce latency and you do not get much room there.

To get better performance, we could try to increase the bit size of each predictor, but in turn, it will reduce the number of branches you can keep inside the predictor. Also, increasing the size will not have a linear increase in accuracy anyway.

A good metric is **MPKI** (misses per kilo instructions). A good predictor is about 5 MPKI nowadays. It is better than the percentage of correct predictions because you get to know the frequency of branches in a sense.

Branch Target Buffer (BTB)

Now new problem arises since branch instruction and the targettaken instruction do not have the same PC. So we need to have a lookup table to know where to jump to:

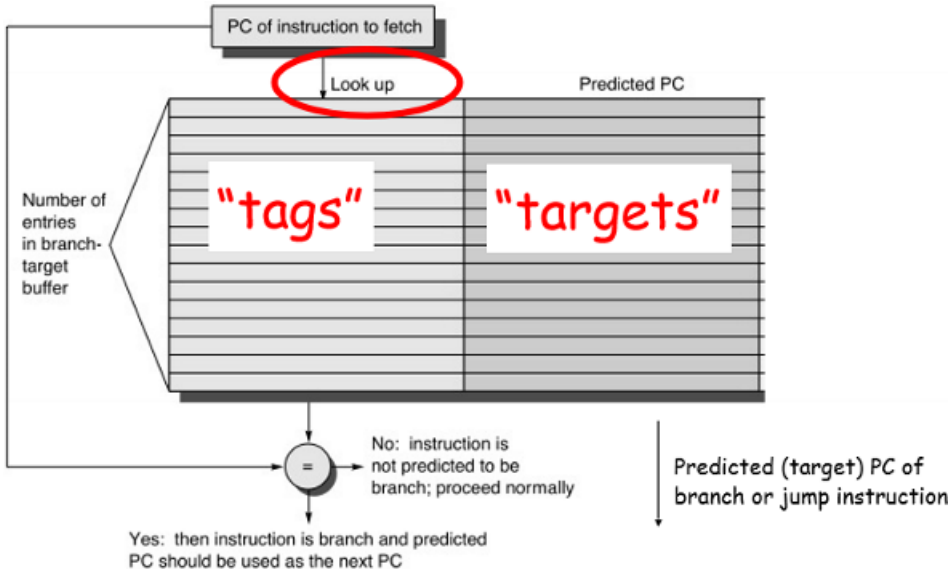

Some special cases

If a function is called on multiple addresses, when you return, you do not have a constant PC to go to. So the BTB will never contain the correct PC address.

To solve it, we push return addresses into the stack instead of putting them into lookup tables. And then we pop it when we need it. But for this to work, we need a very carefully designed stack usage otherwise it will be contaminated and everything will fail.

Terminologies

Terminologies are not standardized in the industry. Different companies mix up branch predictor and BTB.

In CPEN 411:

- branch predictor predicts direction (Taken or Note Taken)
- BTB returns target PC assuming predicted taken.

Corelated branch

If the previous branch's outcome influences the next branch's prediction, then they are correlated.

Now the problem appears to be that some effector branch might be far away from the branch it influences, we need some way to collect the previous branch information to predict the next branch:

1Bit Branch Predictor

Now we can have one table for "previously taken" and one for "previously not taken":

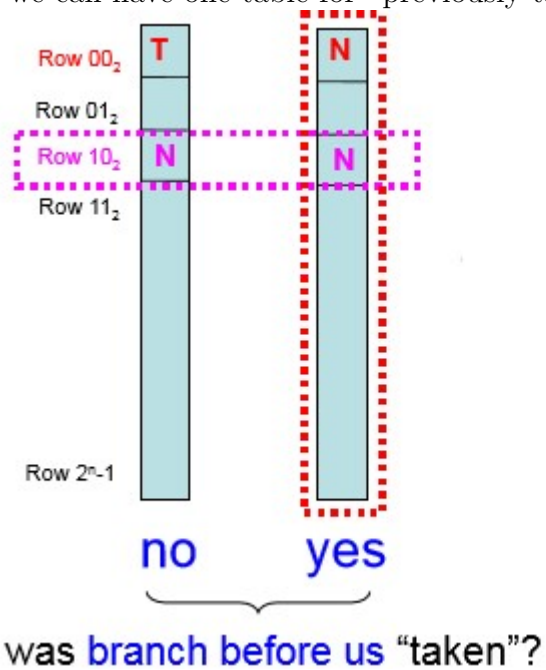

Here we can clearly predict that if the last branch is not taken, then we should predict "00" to be true.

So for the two tables, the program counter would be used to index them into the same position in the table, and then we decide which table to choose based on the previous context.

Note that we should predict based on **Last actual outcome** instead of the last prediction. But that might not always be possible because of the pipelining nature.

Correlating against Multiple Branches

As mentioned before, it is possible that we may have an effector branch far away from the interested branch. The easiest way of solving it is to add more tables to track them down.

Shift registers to track the history

Recall a shift register:

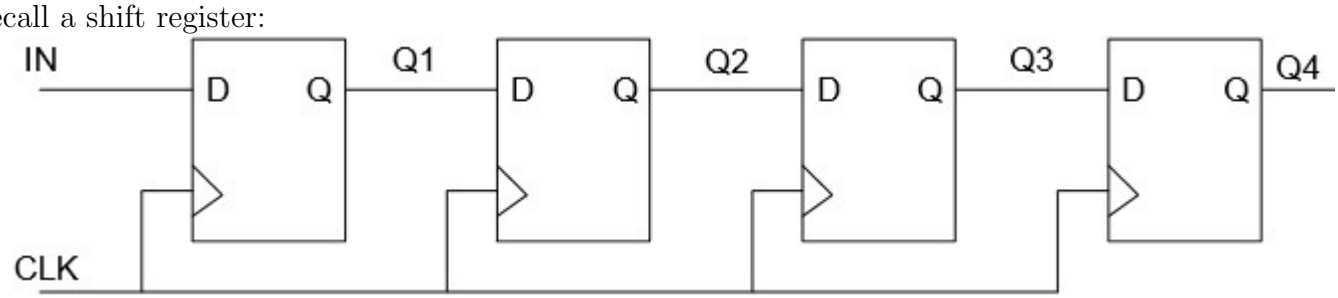

We can keep the m most recent taken history inside this m shift registers which updates every time a branch outcome is computed. Then the output of the series of registers can be used to enter a mux that chooses which table out of the 2^m tables we need to use to predict. With the same logic, we can find which one to update when the outcome is out.

These registers are call **(Global) Branch History Register** (G)BHR

Tradeoffs in design

It is nice to have as long as possible history so that we keep all useful history. However, the number of tables we need for each increased bit of history counter is exponential:

$$m \text{ bit counter} \implies 2^m \text{ tables}$$

At the same time, to get a better performance, we should also consider having more bits on each table to track more history of each branch on each table.

But the size of the branch predictor would always be limited!

8 Load/Store Processing

Start with an example:

```
sw r2, 0(r9)
lw r2, 0(r8)
addi r4, r2, #0xf00
```

The above code stores the r2 value to to address r9, then loads the value at address r8 to r2. The add instruction is waiting for the load instruction to complete. In most cases, loads are on the critical path where stores are usually not.

It may look like there are no dependencies, but actually, since r9 and r8 are pointers, it is possible that r9 and r8 could contain the same value, thus loading after storing immediately.

Store buffer

Since stores can usually be delayed, we would like to use cache bandwidth for loads and send stores to the cache when it is free to improve performance. So we want something to delay stores until bandwidth is available.

- queue stores ina **store buffer**
- allow loads to **bypass**
- mark as noncommitted if the store is still in ROB (Not sure if the store is good to be returned)
- mark as committed if retired from ROB

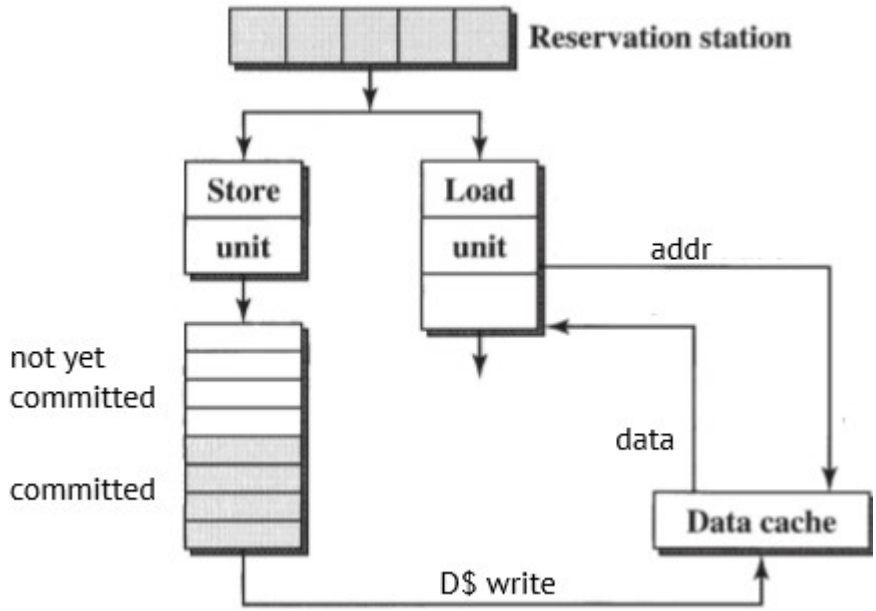

Note that if an **exception** appears, we just need to flush the **uncommitted** entries since committed entries are good to go.

Also, we need to note that we still do not have a way to check for **dependencies**. Before executing the load instructions, we need to check the **entire store buffer** to make sure that they are updated.

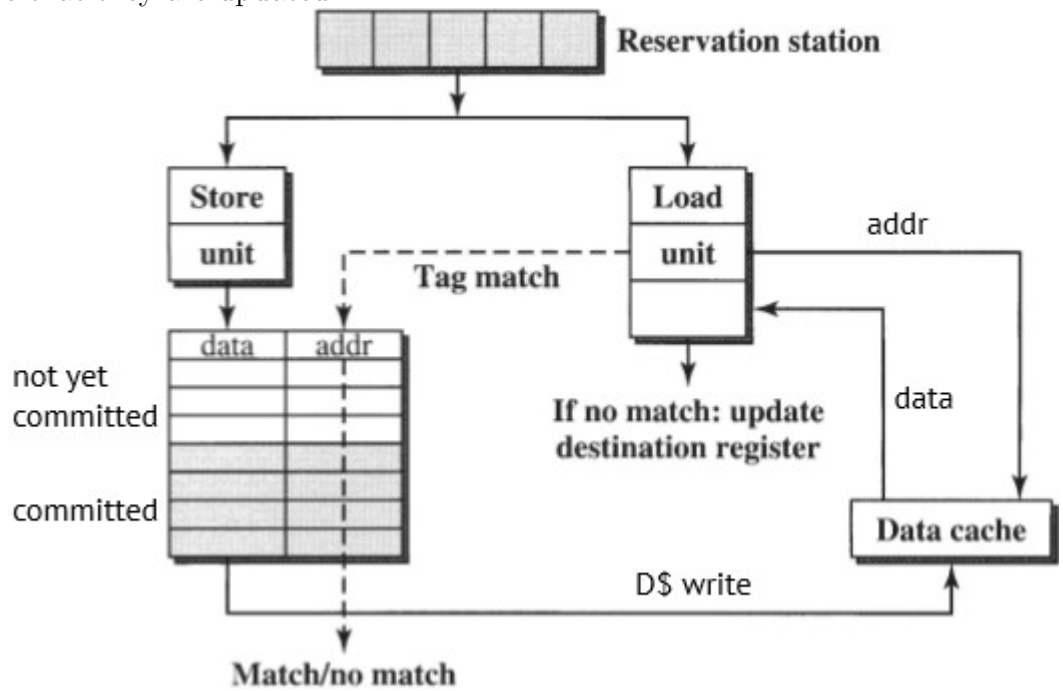

If the address matches a store buffer entry, we need to stall the load since we need to update the value.

But when the value is actually in speculating, we should just get it anyway, which calls for forwarding.

Load forwarding

the methodology behind forwarding:

- if the stored value is marked committed in the store buffer, we should get the value since it is correct.
- if the stored value is marked uncommitted in the store buffer, we can get the value anyway since ROB would flush the value when the branch is wrongly predicted so no influence.

So we cases:

- **load bypassing** $\iff$ no memory dependencies
- **load forwarding** $\iff$ a memory dependency exists

memory dependency prediction

We must wait until **addresses resolved** to determine if there is a dependency. What if we can speculate no dependency and cancel if wrong?

So we predict memory dependency:

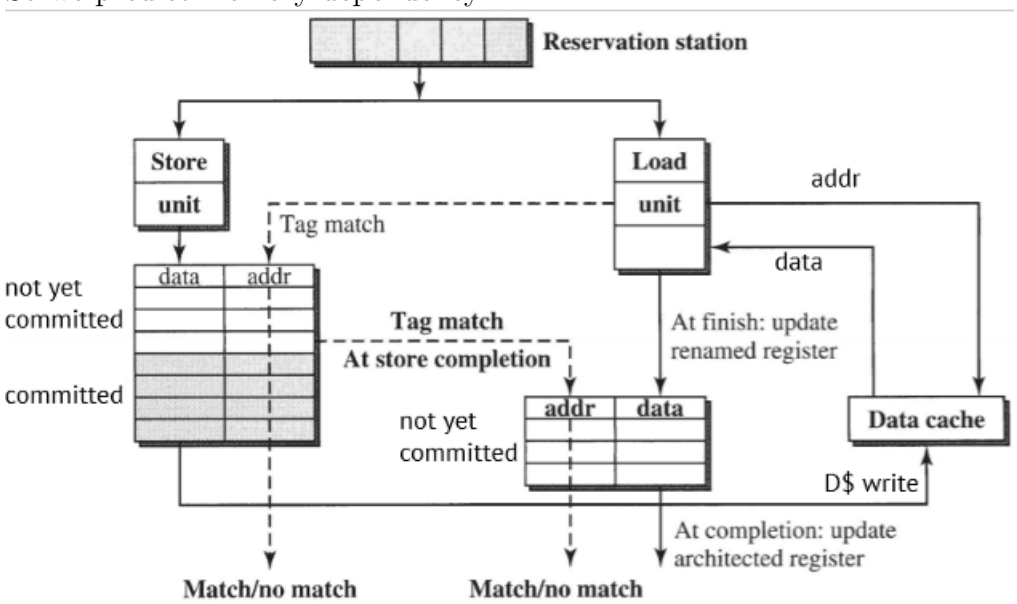

We load the value based on prediction. This way we can have the value loaded to cache earlier and proceed. However, we need to cancel it when the stored address matches the load address and it is committed. This means that the memory value should be updated at that instance and we should not use the previous value. Here we flush the ROB.

ROB makes sure that only the correct values can be retired from CPU to memory. You can add more and more predictions based on this.

wiki explain to elaborate

Memory dependence prediction executes memory access operations out of program order to predict true dependencies between loads and stores at instruction execution time.

Selective memory dependence prediction stalls specific loads until it is certain that no violation may occur. It does not explicitly predict dependencies. This predictor may delay loads longer than necessary and hence result in suboptimal performance. In fact, in some cases, it performs worse than naively speculating all loads as early as possible. This is because often it's faster to mispeculate and recover than to wait for all preceding stores to execute. Exact memory dependence prediction was developed at the University of WisconsinMadison.

Specifically, Dynamic Speculation and Synchronization delay load only as long as it is necessary by predicting the exact store a load should wait for. This predictor predicts exact dependencies (store and load pair).

The synonym predictor groups together all dependencies that share a common load or store instruction. The store sets predictor represents multiple potential dependences efficiently by grouping together all possible stores a load may depend upon.

The store barrier predictor treats certain store instructions as barriers. That is, all subsequent load or store operations are not allowed to bypass the specific store. The store barrier predictor does not explicitly predict dependencies. This predictor may unnecessarily delay subsequent, yet independent loads.

Memory dependence prediction has other applications beyond the scheduling of loads and stores. For example, speculative memory cloaking and speculative memory bypassing use memory dependence prediction to streamline the communication of values through memory.

9 Memory Consistency

Cores are executing in parallel. We need to make sure that core 0 finishes writing before core 1 reads the same data.

Ordering accesses to shared memory

thread A	thread B
S1: store data = New	
S2: store flag = SET	L1 : load x1 $<-$ flag
	B1 : if x1 is not SET: jump to L1
	L2: load x2 $<-$ data

Here for each store operation on data, we have a flag that indicates if it is done or not. S1 is the actual storage and S2 is the flag. L1 and B1 loops if not set, and only loads when it is set. To obtain the correct answer, we must have

- S1 before S2 (Should not claim it is done when it is not done)and
- L1 before L2 (Should not read data before write finishes)

Flag communicates that all data has been written.

memory ordering restrictions are needed for both multicore and singlecore since it is a concurrent thread problem. Only singlethread operations can follow the natural program order.

Where memory access reordering can happen

- programmer optimization;
- compiler optimization (e.g., reg alloc, reordering, etc.);
- inside each CPU core (store buffer/LSQ, prefetching, speculating,...);
- interconnect (e.g., some paths are faster);
- in RAM (e.g., FR-FCFS scheduling, many channels)

Sequential Consistency

a multiprocessor system is sequentially consistent if:

- the result of **any execution** is the same as if the operations of all the processors were executed in **some sequential order**, and
- the operations of **each individual processor** appear in this sequence in the **order specified by its program**

Example of ordering

Imagine that at t_0, mem[X]=mem[Y]=0. Then we have two cores executing different instructions:

core A:	core B
$A1:$ store $X < -1$	$B1:$ store $Y < -1$
$A2:$ load$x_1 < -Y$	$B2:$ load $x_2 < -x$

Multiple possible results could occur:

x_1	x_2SC ordering
1	$1A1, B1, A2, B2$
1	$0B1, B2, A1, A2$
0	$1A1, A2, B1, B2$
0	0not possible

However, if we have a store buffer (allows loads to bypass stores), then A2 can be Scheduled to execute before A1 since there is no dependency between A1 and A2.

Now it is possible to get the fourth possibility:

x_1	x_2SC ordering
1	$1A1, B1, A2, B2$
1	$0B1, B2, A1, A2$
0	$1A1, A2, B1, B2$
0	$0A2, B1, B2, A1$

But note that the last one is not in sequential order.

Implications for reordering load/stores

A sequentially consistent system must maintain:

- load < load ordering
- load < store ordering
- store < store ordering
- store < load ordering

for access to all addresses within each core.

Concurrent solutions

True Logical Constraints

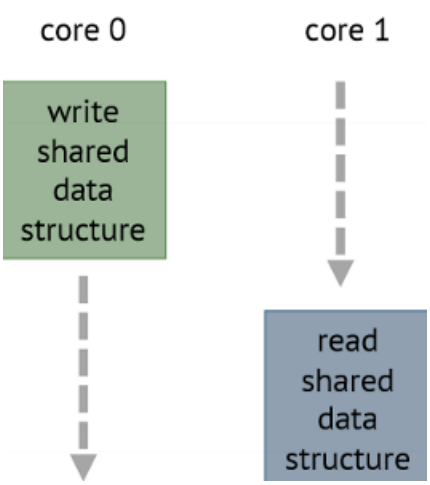

- Green write accesses can be out-of-order if all finish before the blue reads start

- Blue read accesses can be out-of-order if none start before the green writes finish
- IDEA: allow arbitrary reordering, except for **Synchronization ops** (A programmer driven approach)

Weak Ordering (WO)

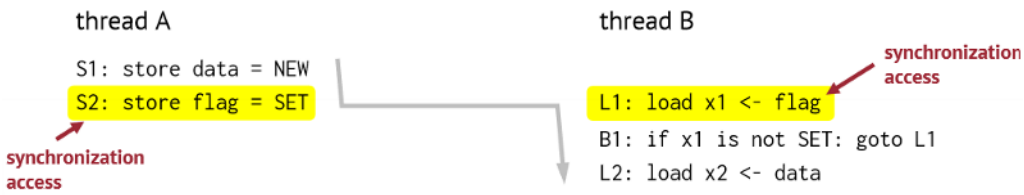

- before synchronization ops: finish all prior ld/stack
- before any ld/st: finish all prior synchronization ops.
- synchronization ops are **sequentially consistent**

So instructions before and after synchronization can be outoforder.

Memory fences

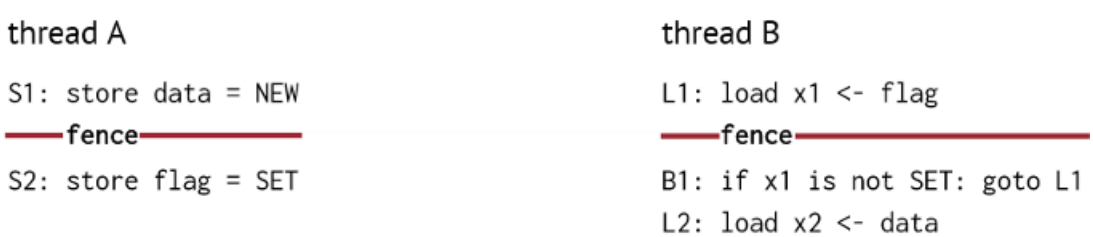

Special **memory fence** (memory barrier) instructions occur in most of the computer architectures. All instructions can be outoforder between fences but not crossing them.

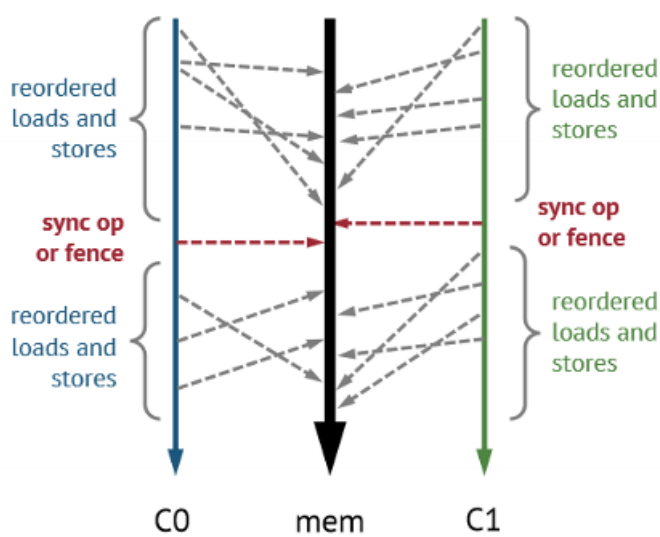

Note that we have to make sure that the fences are SC.

Acquire and Release

Fences might be too strong, some could pass the fences that would not cause an issue.

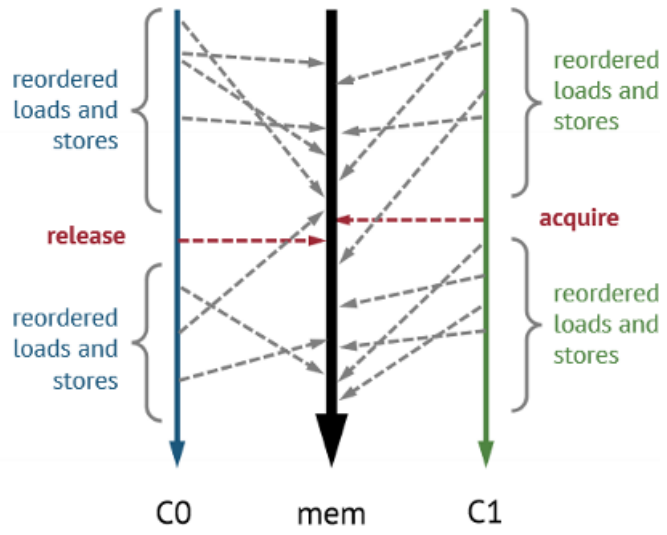

- make sure no ld/st leak past Release
- make sure no ld/st leak before acquire

Store atomicity

Recall that SC requires that all processor cores observe the same memory operation order.

Store atomicity:

- if one processor observed our write
- then everyone else observed it too

relaxing this compromises causality!!

SC for data-race-free programs

Most modern languages like C, C++, and Java support the DRF memory model: programs guaranteed to be SC only if

- Have no data races, and
- properly synchronized (e.g. with acquire/release)

Worst case, we can fence around every memory operation but it hurts performance. In practice, insert fences sparingly or performance tanks.