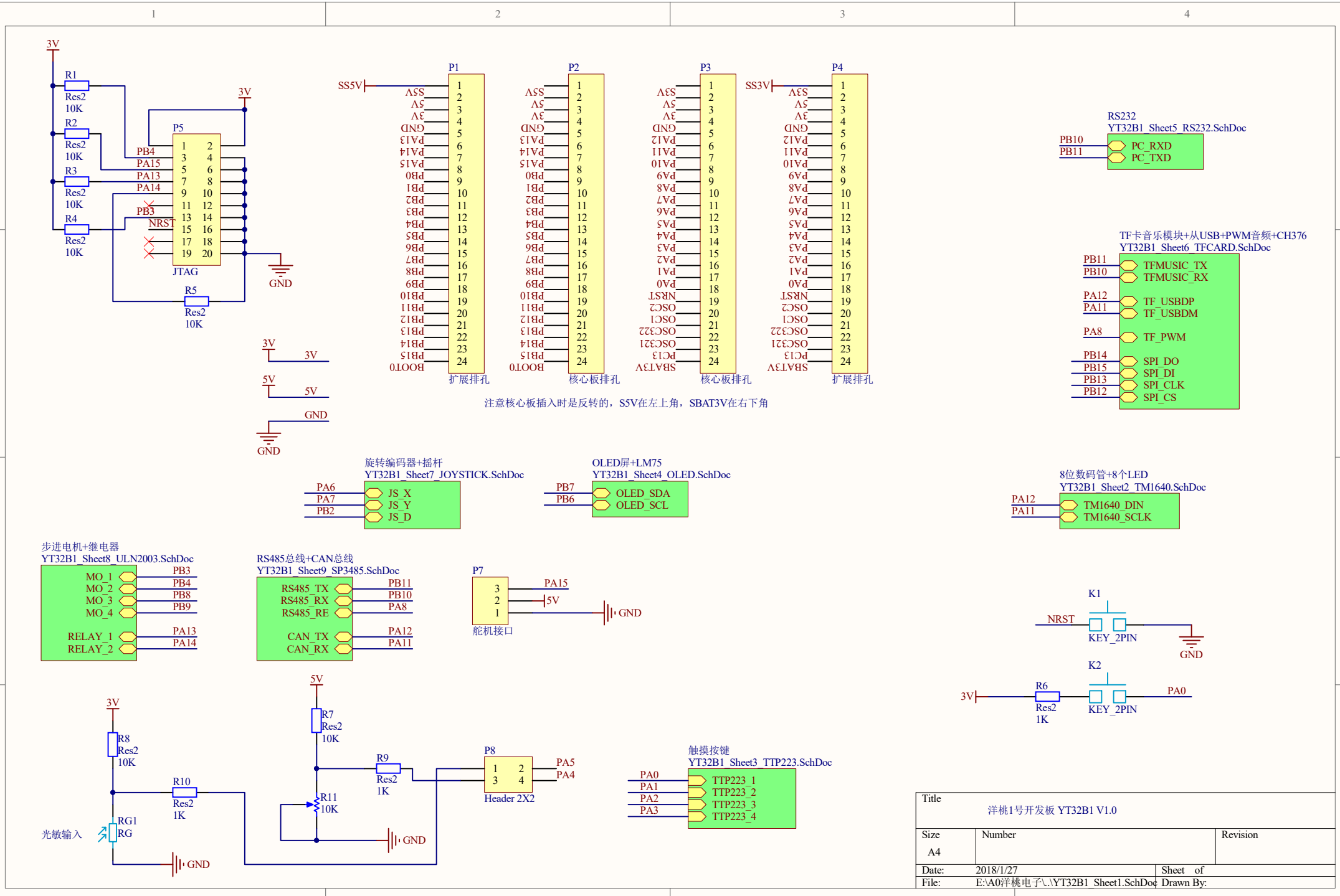
3V
R1
Res2
10K
R2
Res2
10K
R3
Res2
10K
R4
Res2
10K
P5
PB4
PA15
PA13
PA14
PB3
NRST
JTAG
GND
R5
Res2
10K
3V
5V
GND
P1
P2
P3
P4
SS5V
SS3V
扩展排孔
核心板排孔
核心板排孔
扩展排孔
注意核心板插入时是反转的，S5V在左上角，SBAT3V在右下角
RS232
YT32B1_Sheet5_RS232.SchDoc
PB10
PB11
PC_RXD
PC_TXD
TF卡音乐模块+从USB+PWM音频+CH376
YT32B1_Sheet6_TFCARD.SchDoc
PB11
PB10
TFMUSIC_TX
TFMUSIC_RX
PA12
PA11
TF_USBDP
TF_USBDM
PA8
TF_PWM
PB14
PB15
PB13
PB12
SPI_DO
SPI_DI
SPI_CLK
SPI_CS
旋转编码器+摇杆
YT32B1_Sheet7_JOYSTICK.SchDoc
PA6
PA7
PB2
JS_X
JS_Y
JS_D
OLED屏+LM75
YT32B1_Sheet4_OLED.SchDoc
PB7
PB6
OLED_SDA
OLED_SCL
8位数码管+8个LED
YT32B1_Sheet2_TM1640.SchDoc
PA12
PA11
TM1640_DIN
TM1640_SCLK
步进电机+继电器
YT32B1_Sheet8_ULN2003.SchDoc
MO_1
MO_2
MO_3
MO_4
RELAY_1
RELAY_2
PB3
PB4
PB8
PB9
PA13
PA14
RS485总线+CAN总线
YT32B1_Sheet9_SP3485.SchDoc
RS485_TX
RS485_RX
RS485_RE
CAN_TX
CAN_RX
PB11
PB10
PA8
PA12
PA11
P7
PA15
5V
GND
舵机接口
K1
NRST
KEY_2PIN
GND
K2
3V
R6
Res2
1K
KEY_2PIN
PA0
3V
R8
Res2
10K
R10
Res2
1K
RG1
RG
光敏输入
GND
5V
R7
Res2
10K
R9
Res2
1K
R11
10K
GND
P8
Header 2X2
PA5
PA4
触摸按键
YT32B1_Sheet3_TTP223.SchDoc
PA0
PA1
PA2
PA3
TTP223_1
TTP223_2
TTP223_3
TTP223_4
Title
洋桃1号开发板 YT32B1 V1.0
Size
A4
Number
Revision
Date: 2018/1/27
Sheet of
File: E:\A0洋桃电子\..\YT32B1_Sheet1.SchDoc
Drawn By: