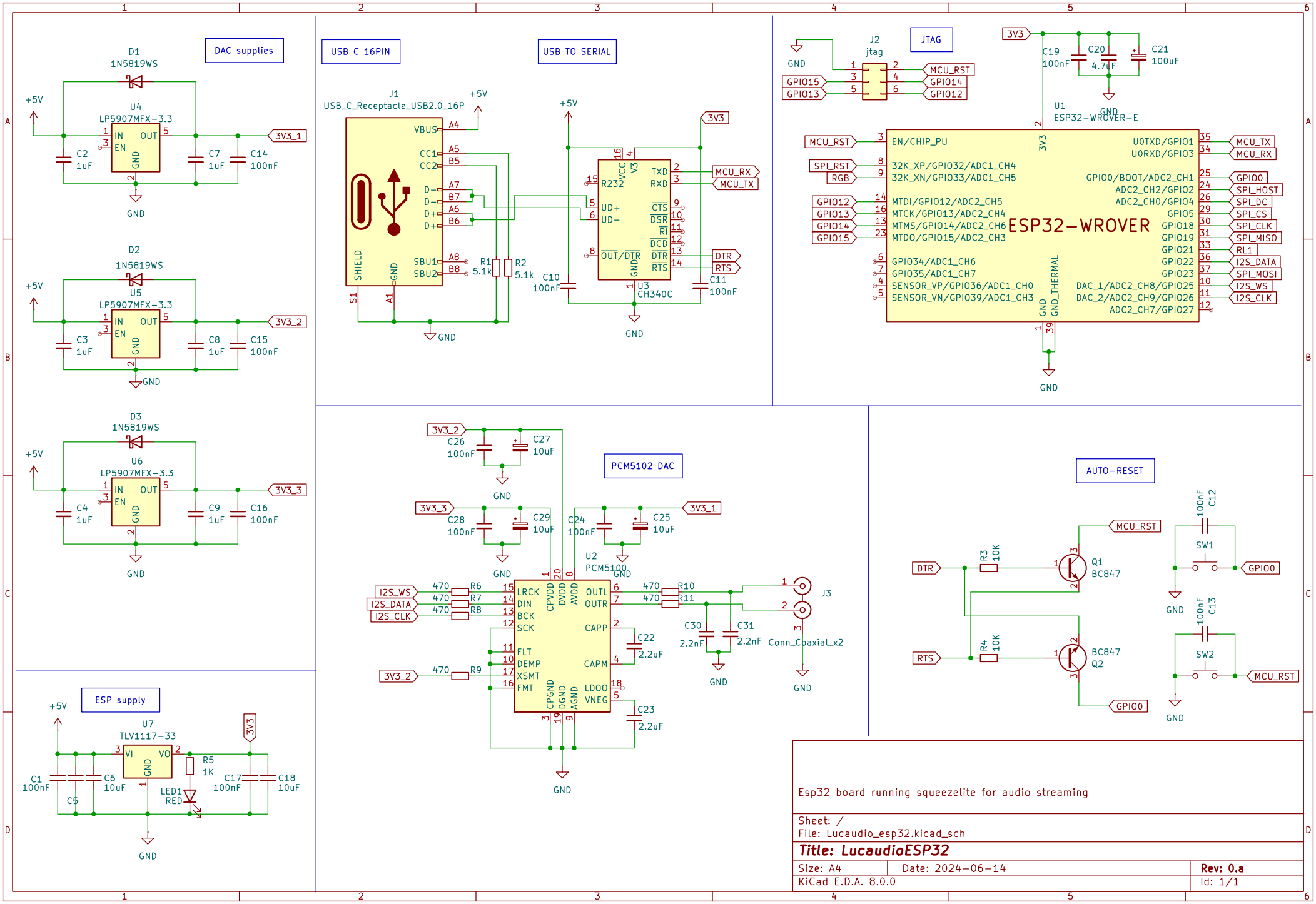
DAC supplies
D1
1N5819WS
U4
LP5907MFX-3.3
+5V
3V3_1
C2
1uF
C7
1uF
C14
100nF
GND
D2
1N5819WS
U5
LP5907MFX-3.3
3V3_2
C3
1uF
C8
1uF
C15
100nF
D3
1N5819WS
U6
LP5907MFX-3.3
3V3_3
C4
1uF
C9
1uF
C16
100nF
ESP supply
U7
TLV1117-33
VI
VO
GND
C1
100nF
C5
C6
10uF
R5
1K
LED1
RED
C17
100nF
C18
10uF
3V3
USB C 16PIN
J1
USB_C_Receptacle_USB2.0_16P
VBUS
CC1
CC2
D-
D+
SBU1
SBU2
SHIELD
R1
5.1k
R2
5.1k
USB TO SERIAL
C10
100nF
U3
CH340C
R232
VCC
V3
TXD
RXD
UD+
UD-
CTS
DSR
RI
DCD
DTR
RTS
OUT/DTR
MCU_RX
MCU_TX
C11
100nF
JTAG
J2
jtag
GPIO15
GPIO13
GPIO14
GPIO12
C19
100nF
C20
4.7uF
C21
100uF
U1
ESP32-WROVER-E
EN/CHIP_PU
32K_XP/GPIO32/ADC1_CH4
32K_XN/GPIO33/ADC1_CH5
MTDI/GPIO12/ADC2_CH5
MTCK/GPIO13/ADC2_CH4
MTMS/GPIO14/ADC2_CH6
MTDO/GPIO15/ADC2_CH3
GPIO34/ADC1_CH6
GPIO35/ADC1_CH7
SENSOR_VP/GPIO36/ADC1_CH0
SENSOR_VN/GPIO39/ADC1_CH3
U0TXD/GPIO1
U0RXD/GPIO3
GPIO0/BOOT/ADC2_CH1
ADC2_CH2/GPIO2
ADC2_CH0/GPIO4
GPIO5
GPIO18
GPIO19
GPIO21
GPIO22
GPIO23
DAC_1/ADC2_CH8/GPIO25
DAC_2/ADC2_CH9/GPIO26
ADC2_CH7/GPIO27
ESP32-WROVER
GND_THERMAL
SPI_RST
RGB
SPI_HOST
SPI_DC
SPI_CS
SPI_CLK
SPI_MISO
RL1
I2S_DATA
SPI_MOSI
I2S_WS
I2S_CLK
PCM5102 DAC
C26
100nF
C27
10uF
C28
100nF
C29
10uF
C24
100nF
C25
10uF
U2
PCM5100
LRCK
DIN
BCK
SCK
FLT
DEMP
XSMT
FMT
CPVDD
DVDD
AVDD
CPGND
DGND
AGND
OUTL
OUTR
CAPP
CAPM
LDOO
VNEG
R6
R7
R8
R9
R10
R11
C22
2.2uF
C23
2.2uF
C30
2.2nF
C31
2.2nF
J3
Conn_Coaxial_x2
AUTO-RESET
DTR
RTS
R3
10K
R4
10K
Q1
BC847
Q2
C12
100nF
C13
100nF
SW1
SW2
Esp32 board running squeezelite for audio streaming
Sheet: /
File: Lucaudio_esp32.kicad_sch
Title: LucaudioESP32
Size: A4
Date: 2024-06-14
Rev: 0.a
KiCad E.D.A. 8.0.0
Id: 1/1