frq3

1. Directions: For parts of the free-response question that require calculations, clearly show the method used and the steps involved in arriving at your answers. You must show your work to receive credit for your answer. Examples and equations may be included in your answers where appropriate.

While investigating the chemical and physical properties of metallic element E, a student conducts an experiment by combining $\mathrm{E}(s)$ and $\mathrm{HBr}(aq)$, which react according to the following equation.

$$2\ \mathrm{E}(s) + 2\ \mathrm{HBr}(aq) \rightarrow 2\ \mathrm{EBr}(aq) + \mathrm{H_2}(g)$$

(a) Write the net-ionic equation for the reaction.

(b) In the reaction, is $\mathrm{E}(s)$ being oxidized or reduced? Justify your answer in terms of oxidation numbers.

As shown in the following diagram, $10.00\ \mathrm{mL}$ samples of $\mathrm{HBr}(aq)$ are added to different quantities of $\mathrm{E}(s)$ in a closed test tube. At the start of each trial, the gas-collecting tube is filled completely with distilled water. The samples of $\mathrm{E}(s)$ react with $\mathrm{HBr}(aq)$, and the $\mathrm{H_2}(g)$ produced is collected in the gas-collecting tube.

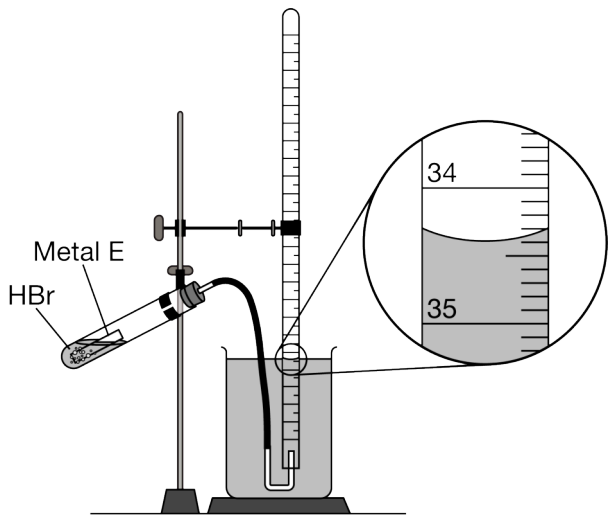

(c) The enlarged view of the gas-collecting tube at the end of trial 3 is shown in the diagram above. What should the student record as the volume, in mL, of $\mathrm{H_2}(g)$ collected in trial 3?

(d) In the laboratory, the temperature is $295\ \mathrm{K}$ and the total pressure in the gas-collecting tube is $748.6\ \mathrm{mmHg}$. If the vapor pressure of water at $295\ \mathrm{K}$ is $19.8\ \mathrm{mmHg}$, determine the pressure of the $\mathrm{H_2}(g)$ in the gas-collecting tube.

frq3

Trial	Initial Moles of $E(s)$	Initial $[HBr(aq)]$ (M)	Volume of $H_2(g)$ Produced (mL)
1	0.00220	0.500	27.02
2	0.00240	0.500	29.40
3	0.00280	0.500	?

(e) The data from all three trials are given above. A student claims that $HBr(aq)$ is the limiting reactant in trial 1. Do you agree or disagree? Justify your answer with information in the data table.

(f) A certain pure compound containing element E is analyzed. The elemental composition of the compound is shown in the following table. Determine the empirical formula of the compound using the information in the table.

Element	Moles Present in the Compound
E	0.0676
S	0.0338
O	0.102

(g) A different element, L, is located in the same row of the periodic table as element E, but L has roughly half the atomic mass of E. Is the atomic radius of L less than, equal to, or greater than the atomic radius of E? Justify your answer using principles of atomic structure.

(h) The ionic radii of elements E and a different metallic element, M, are shown in the following table. Both elements form oxides, E_2O and MO. If lattice energy is defined as the energy required to separate an ionic solid into individual separate gaseous ions, would the lattice energy of MO be less than, equal to, or greater than the lattice energy of the oxide E_2O? Justify your answer in terms of Coulomb's law.

Element	Ionic radius (pm)
E	170
M	110

frq3

2. **Directions: For parts of the free-response question that require calculations, clearly show the method used and the steps involved in arriving at your answers. You must show your work to receive credit for your answer. Examples and equations may be included in your answers where appropriate.**

While investigating the chemical and physical properties of metallic element E, a student conducts an experiment by combining $\mathrm{E}(s)$ and $\mathrm{HBr}(aq)$, which react according to the following equation.

$$2\ \mathrm{E}(s) + 6\ \mathrm{HBr}(aq) \rightarrow 2\ \mathrm{EBr_3}(aq) + 3\mathrm{H_2}(g)$$

(a) Write the net-ionic equation for the reaction.

(b) In the reaction, is $\mathrm{E}(s)$ being oxidized or reduced? Justify your answer in terms of oxidation numbers.

As shown in the following diagram, $10.00\ \mathrm{mL}$ samples of $\mathrm{HBr}(aq)$ are added to different quantities of $\mathrm{E}(s)$ in a closed test tube. At the start of each trial, the gas-collecting tube is filled completely with distilled water. The samples of $\mathrm{E}(s)$ react with $\mathrm{HBr}(aq)$, and the $\mathrm{H_2}(g)$ produced is collected in the gas-collecting tube.

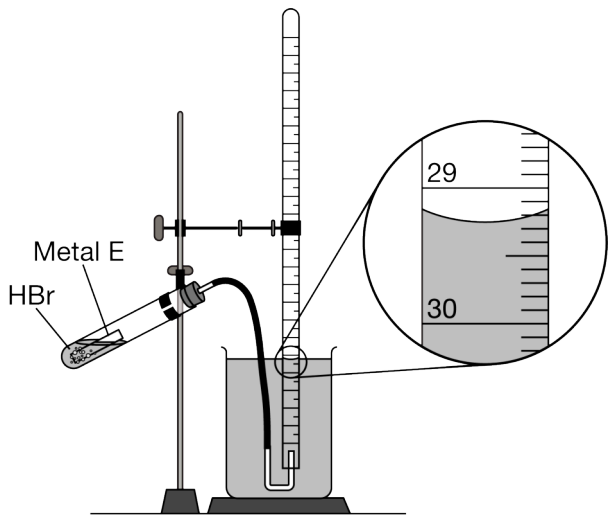

(c) The enlarged view of the gas-collecting tube at the end of trial 3 is shown in the diagram above. What should the student record as the volume, in mL, of $\mathrm{H_2}(g)$ collected in trial 3?

(d) In the laboratory, the temperature is $295\ \mathrm{K}$ and the total pressure in the gas-collecting tube is $744.7\ \mathrm{mmHg}$. If the vapor pressure of water at $295\ \mathrm{K}$ is $19.8\ \mathrm{mmHg}$, determine the pressure of the $\mathrm{H_2}(g)$ in the gas-collecting tube.

frq3

Trial	Initial Moles of $E(s)$	Initial $[HBr(aq)]$ (M)	Volume of $H_2(g)$ Produced (mL)
1	5.40×10^{-4}	0.400	19.95
2	6.90×10^{-4}	0.400	25.52
3	8.20×10^{-4}	0.400	?

(e) The data from all three trials are given above. A student claims that $E(s)$ is the limiting reactant in trial 2. Do you agree or disagree? Justify your answer with information in the data table.

(f) A certain pure compound containing element E is analyzed. The elemental composition of the compound is shown in the following table. Determine the empirical formula of the compound using the information in the table.

Element	Moles Present in the Compound
E	0.0167
I	0.050
O	0.200

(g) A different element, L, is located in the same column of the periodic table as element E, but L has roughly double the atomic mass of E. Is the atomic radius of L less than, equal to, or greater than the atomic radius of E? Justify your answer using principles of atomic structure.

(h) The ionic radii of ions X^{2-} and Z^{2-} are shown in the following table. Element E can bond with X or Z to form E_2X_3 or E_2Z_3, respectively. If lattice energy is defined as the energy required to separate an ionic solid into individual separate gaseous ions, would the lattice energy of E_2X_3 be less than, equal to, or greater than the lattice energy of E_2Z_3? Justify your answer in terms of Coulomb's law.

Element	Ionic radius (pm)
X^{2-}	120
Z^{2-}	180

frq3

3. A new element with atomic number 116 was discovered in 2000. In 2012 it was named livermorium, Lv. Although Lv is radioactive and short-lived, its chemical properties and reactivity should follow periodic trends.

a. Write the electron configuration for the valence electrons of Lv in the ground state.

b. According to periodic properties, what would be the most likely formula for the product obtained when Lv reacts with $H_2(g)$?

c. The first ionization energy of polonium, Po, is 812 kJ/mol. Is the first ionization energy of Lv expected to be greater than, less than, or equal to that of Po? Justify your answer in terms of Coulomb's law.

d. Shown below is a hypothetical mass spectrum for a sample of Lv containing 10 atoms.

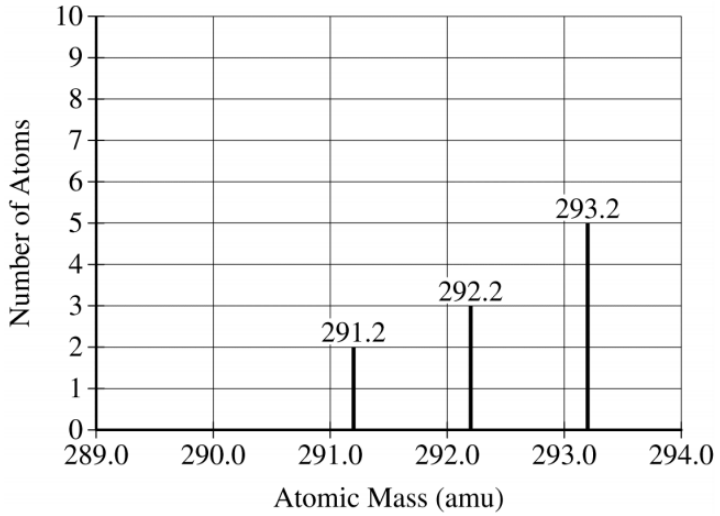

Using the information in the graph, determine the average atomic mass of Lv in the sample to four significant figures.

frq3

4. For parts of the free response question that require calculations, clearly show the method used and the steps involved in arriving at your answers. You must show your work to receive credit for your answer. Examples and equations may be included in your answers where appropriate.

For parts of the free response question that require calculations, clearly show the method used and the steps involved in arriving at your answers. You must show your work to receive credit for your answer. Examples and equations may be included in your answers where appropriate.

Answer the following questions about atomic structure and bonding.

(a) Write the complete ground-state electron configuration of the Kr atom.

(b) The Rb^+ ion has the same electron configuration as the neutral Kr atom. Which has the larger radius, the Rb^+ ion or the Kr atom? Justify your answer in terms of Coulomb's law.

(c) The composition of a sample of solid Rb containing a high percentage of the radioactive isotope Rb-83 is given in the following table.

Isotope	Isotopic Mass (amu)	Percentage of Sample	Isotope Half-Life
Rb-83	82.92	32.5%	86 days
Rb-85	84.91	50.8%	stable
Rb-87	86.91	16.7%	stable

(i) Using the values in the table, calculate the average atomic mass, in amu, of Rb in the sample.

(ii) Rb-83 undergoes radioactive decay into gaseous Kr-83, which leaves the solid sample. Over time, how will the average atomic mass of the remaining sample compare to the value calculated in part (c)(i) ?

frq3

5. For parts of the free response question that require calculations, clearly show the method used and the steps involved in arriving at your answers. You must show your work to receive credit for your answer. Examples and equations may be included in your answers where appropriate.

Answer the following questions related to the analysis of $CaBr_2$.

(a) A student has a 10.0 g sample of $CaBr_2$. Show the setup of the calculation to determine the number of moles of $CaBr_2$ in the sample. Include units in the setup. (You do not need to do any calculations.)

(b) What number, in addition to the answer to part (a), is needed to determine the number of atoms of Ca in the sample?

(c) A different student is given a 10.0 g sample labeled $CaBr_2$ that may contain an inert (nonreacting) impurity. Identify a quantity from the results of laboratory analysis that the student could use to determine whether the sample was pure.

(d) Explain why $CaCl_2$ is likely to have properties similar to those of $CaBr_2$.

frq3

6. **Directions: For parts of the free-response question that require calculations, clearly show the method used and the steps involved in arriving at your answers. You must show your work to receive credit for your answer. Examples and equations may be included in your answers where appropriate.**

Answer the following questions about elements in Group 16 of the periodic table.

(a) Using principles of atomic structure, explain why the first ionization energy of Po is less than that of Se.

(b) Photoelectron spectroscopy data for the $1s$ sublevel of Se and the $1s$ sublevel of Po are represented below. In terms of Coulomb's law and atomic structure, explain why the peak for Po is positioned so far to the left of the peak for Se.

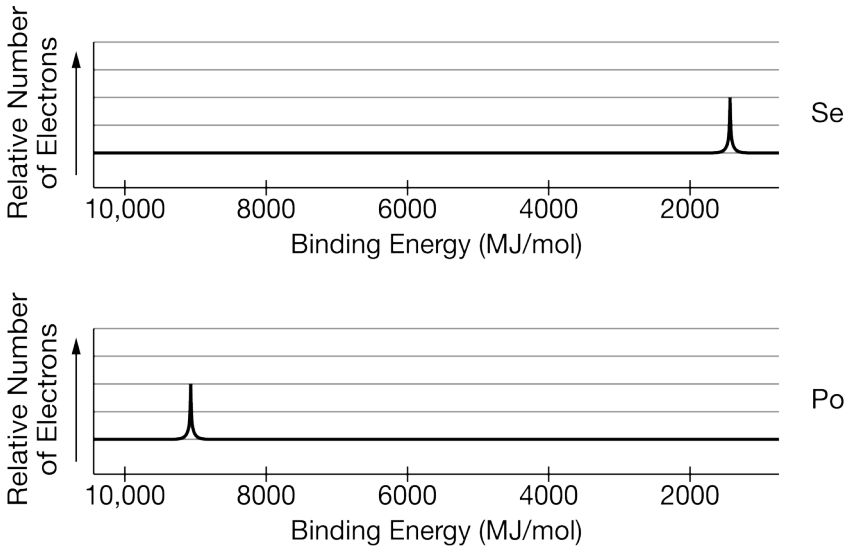

Three compounds that contain elements from Group 16 are $\mathrm{SeO_2F_2}$, $\mathrm{SeOF_2}$, and $\mathrm{SOF_2}$. Possible Lewis electron dot diagrams for the compounds are shown below.

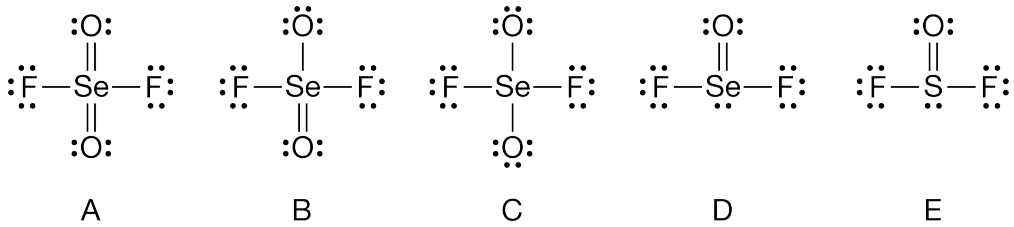

(c) Which structure, A, B, or C, minimizes the formal charges for each atom in $\mathrm{SeO_2F_2}$? Justify your choice.

(d) A student proposes that the energy of the $\mathrm{Se-to-O}$ bond in the structure in diagram D is greater than that of the $\mathrm{Se-to-O}$ bond in the structure in diagram C. Do you agree or disagree with the student's claim? Justify your answer.

(e) The dipole moment of the $\mathrm{SeO_2F_2}$ molecule (diagrams A, B and C) is nonzero. Identify its molecular geometry and explain how its geometry and the polarity of its bonds result in a nonzero dipole moment.

frq3

The melting point of $SeOF_2$ (diagram D) is greater than the melting point of SOF_2 (diagram E).

(f) Identify the type(s) of intermolecular force(s) that the two substances have in common.

(g) Explain the difference in melting points based on the types and relative strengths of intermolecular forces.

(h) $SeOF_2$ reacts with SiO_2 to produce SeO_2 and SiF_4. The unbalanced chemical equation for the reaction appears below.

$$a\ SeOF_2 + b\ SiO_2 \rightarrow c\ SeO_2 + d\ SiF_4$$

Give the value of each of the following coefficients in the balanced equation.

$a =$
$b =$
$c =$
$d =$

frq3

7. **Directions: For parts of the free-response question that require calculations, clearly show the method used and the steps involved in arriving at your answers. You must show your work to receive credit for your answer. Examples and equations may be included in your answers where appropriate.**

Answer the following questions about elements in Group 16 of the periodic table.

(a) Using principles of atomic structure, explain why the atomic radius of Kr is less than the ionic radius of Se^{2-}.

(b) Photoelectron spectroscopy data for the $1s$ sublevel of S and the $1s$ sublevel of Se are represented below. In terms of Coulomb's law and atomic structure, explain why the peak for Se is positioned so far to the left of the peak for S.

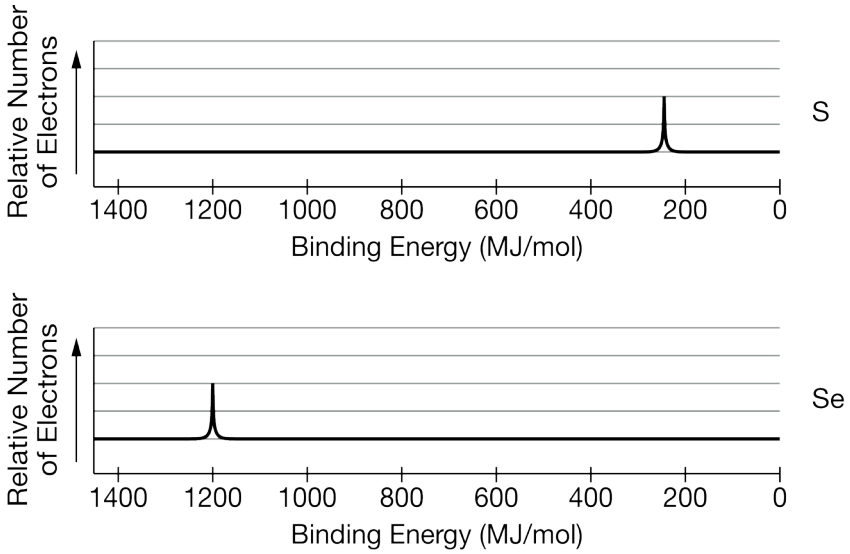

Three compounds that contain elements from Group 16 are $\mathrm{SeO_2F_2}$, $\mathrm{SeOF_2}$, and $\mathrm{SeOCl_2}$. Possible Lewis electron dot diagrams for the compounds are shown below.

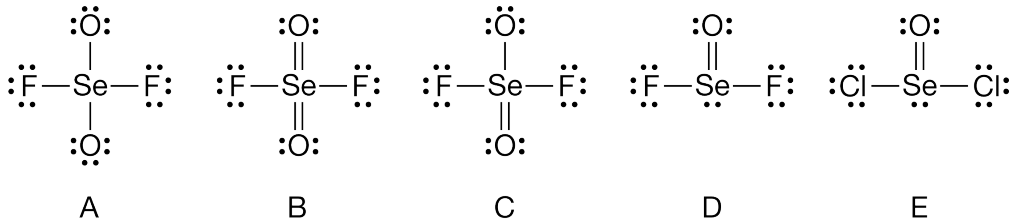

(c) Which structure, A, B, or C, minimizes the formal charges for each atom in $\mathrm{SeO_2F_2}$? Justify your choice.

(d) A student proposes that the energy of the $\mathrm{Se-to-O}$ bond in the structure in diagram D is less than that of the $\mathrm{Se-to-O}$ bond in the structure in diagram A. Do you agree or disagree with the student's claim? Justify your answer.

frq3

(e) The dipole moment of the $SeOF_2$ molecule (diagram D) is nonzero. Identify its molecular geometry and explain how its geometry and the polarity of its bonds result in a nonzero dipole moment.

The boiling point of $SeOF_2$ (diagram D) is less than the boiling point of $SeOCl_2$ (diagram E).

(f) Identify the type(s) of intermolecular force(s) that the two substances have in common.

(g) Explain the difference in boiling points based on the types and relative strengths of intermolecular forces.

(h) $SeOF_2$ reacts with $NaOH$ to produce Na_2SeO_3, NaF, and H_2O. The unbalanced chemical equation for the reaction appears below.

$$a\ SeOF_2 + b\ NaOH \rightarrow c\ Na_2SeO_3 + d\ NaF + e\ H_2O$$

Give the value of each of the following coefficients in the balanced equation.

$a =$
$b =$
$c =$
$d =$
$e =$

frq3

8. **Directions: For parts of the free-response question that require calculations, clearly show the method used and the steps involved in arriving at your answers. You must show your work to receive credit for your answer. Examples and equations may be included in your answers where appropriate**.

Answer the following questions about elements in Group 16 of the periodic table.

(a) Using principles of atomic structure, explain why the atomic radius of Te is less than the ionic radius of Te^{2-}.

(b) Photoelectron spectroscopy data for the $1s$ sublevel of Te and the $1s$ sublevel of O are represented below. In terms of Coulomb's law and atomic structure, explain why the peak for O is positioned so far to the right of the peak for Te.

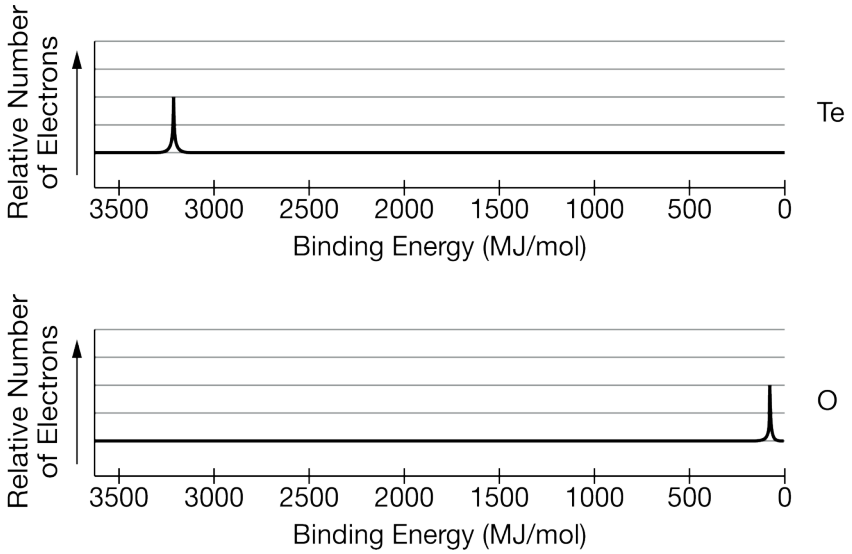

Three compounds that contain elements from Group 16 are $\mathrm{SeOF_2}$, $\mathrm{SeO_2F_2}$, and $\mathrm{SeF_4}$. Possible Lewis electron dot diagrams for the compounds are shown below.

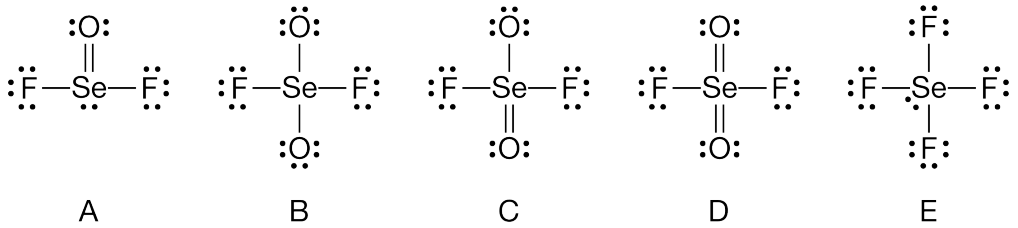

(c) Which structure, B, C or D, minimizes the formal charges for each atom in $\mathrm{SeO_2F_2}$? Justify your choice.

(d) A student proposes that the energy of the $\mathrm{Se-to-F}$ bond in the structure in diagram A is equal to that of the $\mathrm{Se-to-F}$ bond in the structure in diagram D. Do you agree or disagree with the student's claim? Justify your answer.

frq3

(e) The dipole moment of the SeF_4 molecule (diagram E) is nonzero. Identify its molecular geometry and explain how its geometry and the polarity of its bonds result in a nonzero dipole moment.

The melting point of $SeOF_2$ (diagram A) is greater than the melting point of SeO_2F_2 (diagrams B, C, and D).

(f) Identify the type(s) of intermolecular force(s) that the two substances have in common.

(g) Explain the difference in melting points based on the types and relative strengths of intermolecular forces.

(h) TeO_2 reacts with SeF_4 to produce $SeOF_2$ and TeF_4. The unbalanced chemical equation for the reaction appears below.

$a\ TeO_2 + b\ SeF_4 \rightarrow c\ SeOF_2 + d\ TeF_4$

Give the value of each of the following coefficients in the balanced equation.

$a =$
$b =$
$c =$
$d =$

frq3

9. Directions: For parts of the free-response question that require calculations, clearly show the method used and the steps involved in arriving at your answers. You must show your work to receive credit for your answer. Examples and equations may be included in your answers where appropriate.

Answer the following questions about elements in Group 18 of the periodic table.

(a) Using principles of atomic structure, explain why the atomic radius of Xe is less than that of Te.

(b) Photoelectron spectroscopy data for the $1s$ sublevel of Ne and the $1s$ sublevel of Xe are represented below. In terms of Coulomb's law and atomic structure, explain why the peak for Ne is positioned so far to the right of the peak for Xe.

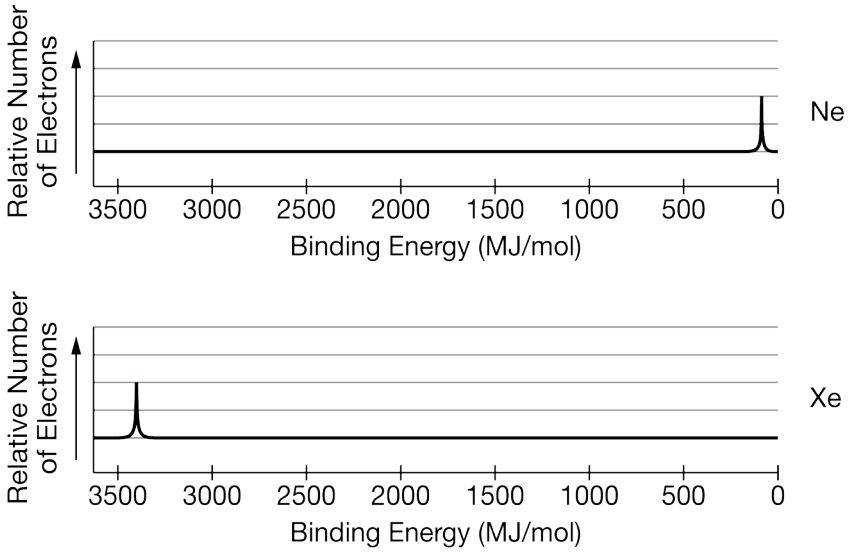

Three compounds that contain an element from Group 18 are $\mathrm{XeOF_4}$, $\mathrm{XeO_2F_2}$, and $\mathrm{XeF_4}$. Possible Lewis electron dot diagrams for the compounds are shown below.

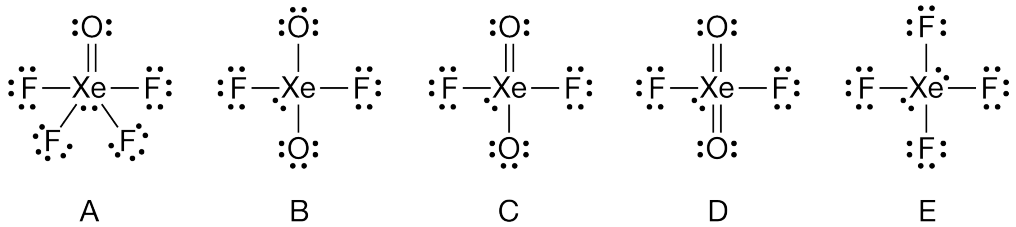

(c) Which structure, B, C, or D, minimizes the formal charges for each atom in $\mathrm{XeO_2F_2}$? Justify your choice.

(d) A student proposes that the energy of the $\mathrm{Xe-to-F}$ bond in the structure in diagram B is equal to that of the $\mathrm{Xe-to-F}$ bond in the structure in diagram A. Do you agree or disagree with the student's claim? Justify your answer.

(e) The dipole moment of the $\mathrm{XeOF_4}$ molecule (diagram A) is nonzero. Identify its molecular geometry and

frq3

explain how its geometry and the polarity of its bonds result in a nonzero dipole moment.

The boiling point of XeF_4 (diagram E) is greater than the boiling point of elemental Xe.

(f) Identify the type(s) of intermolecular force(s) that the two substances have in common.

(g) Explain the difference in boiling points based on the types and relative strengths of intermolecular forces.

(h) $XeOF_4$ reacts with SiO_2 to produce XeO_2F_2 and SiF_4. The unbalanced chemical equation for the reaction appears below.

$$a\ SiO_2 + b\ XeOF_4 \rightarrow c\ SiF_4 + d\ XeO_2F_2$$

Give the value of each of the following coefficients in the balanced equation.

$a =$
$b =$
$c =$
$d =$

frq3

10. **Directions: For parts of the free-response question that require calculations, clearly show the method used and the steps involved in arriving at your answers. You must show your work to receive credit for your answer. Examples and equations may be included in your answers where appropriate.**

Answer the following questions about elements in Group 18 of the periodic table.

(a) Using principles of atomic structure, explain why the ionic radius of Cs^+ is less than the atomic radius of Xe.

(b) Photoelectron spectroscopy data for the $1s$ sublevel of Xe and the $1s$ sublevel of Kr are represented below. In terms of Coulomb's law and atomic structure, explain why the peak for Kr is positioned so far to the right of the peak for Xe.

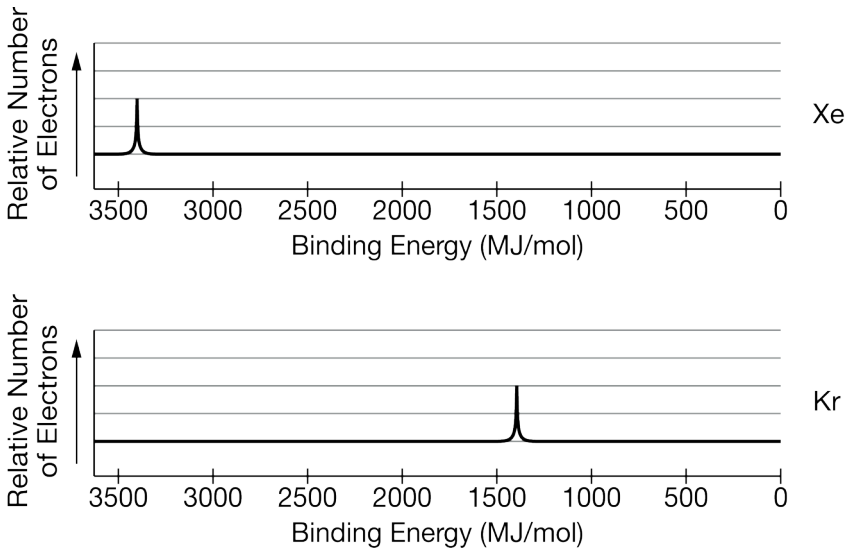

Three compounds that contain an element from Group 18 are XeO_2F_2, XeO_3F_2, and $XeOF_4$. Possible Lewis electron dot diagrams for the compounds are shown below.

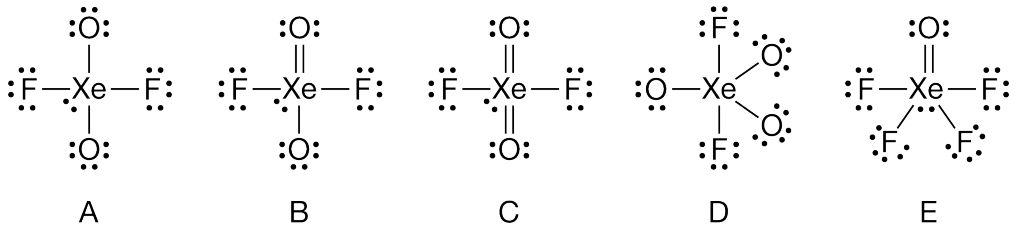

(c) Which structure, A, B, or C, minimizes the formal charges for each atom in XeO_2F_2? Justify your choice.

(d) A student proposes that the energy of the $Xe - to - O$ bond in the structure in diagram E is greater than that of the $Xe - to - O$ bond in the structure in diagram D. Do you agree or disagree with the student's claim? Justify your answer.

(e) The dipole moment of the XeO_3F_2 molecule (diagram D) is zero. Identify its molecular geometry and explain how its geometry and the polarity of its bonds result in a zero dipole moment.

frq3

The melting point of $XeOF_4$ (diagram E) is greater than the melting point of XeO_3F_2 (diagram D).

(f) Identify the type(s) of intermolecular force(s) that the two substances have in common.

(g) Explain the difference in melting points based on the types and relative strengths of intermolecular forces.

(h) XeF_6 reacts with SiO_2 to produce $XeOF_4$ and SiF_4. The unbalanced chemical equation for the reaction appears below.

$$a\ XeF_6 + b\ SiO_2 \rightarrow c\ XeOF_4 + d\ SiF_4$$

Give the value of each of the following coefficients in the balanced equation.

$a =$
$b =$
$c =$
$d =$

frq3

11. Directions: For parts of the free-response question that require calculations, clearly show the method used and the steps involved in arriving at your answers. You must show your work to receive credit for your answer. Examples and equations may be included in your answers where appropriate.

Answer the following questions about elements in Group 18 of the periodic table.

(a) Using principles of atomic structure, explain why the first ionization energy of Rn is less than that of Xe.

(b) Photoelectron spectroscopy data for the $1s$ sublevel of Xe and the $1s$ sublevel of Rn are represented below. In terms of Coulomb's law and atomic structure, explain why the peak for Xe is positioned so far to the right of the peak for Rn.

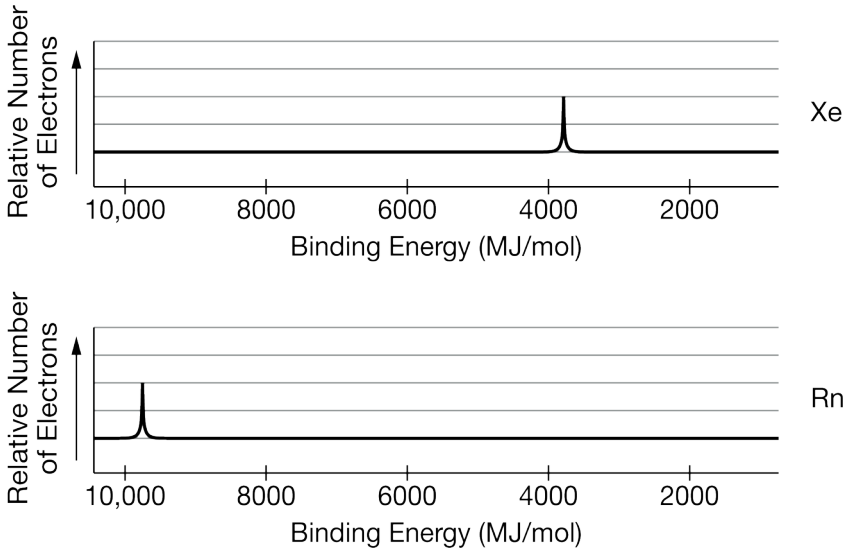

Three compounds that contain an element from Group 18 are $\mathrm{XeO_2F_2}$, $\mathrm{XeOF_4}$, and $\mathrm{XeO_3F_2}$. Possible Lewis electron-dot diagrams for the compounds are shown below.

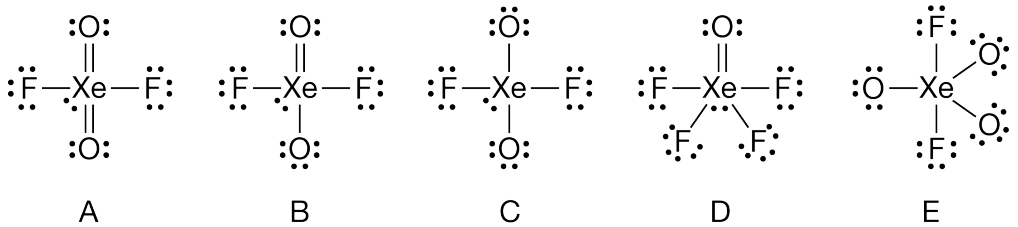

(c) Which structure, A, B or C, minimizes the formal charges for each atom in $\mathrm{XeO_2F_2}$? Justify your choice.

(d) A student proposes that the energy of the $\mathrm{Xe-to-O}$ bond in the structure in diagram D is less than that of the $\mathrm{Xe-to-O}$ bond in the structure in diagram E. Do you agree or disagree with the student's claim? Justify your answer.

(e) The dipole moment of the $\mathrm{XeO_2F_2}$ molecule (diagrams A, B and C) is nonzero. Identify its molecular

frq3

geometry and explain how its geometry and the polarity of its bonds result in a nonzero dipole moment.

The melting point of XeO_2F_2 (diagrams A, B, C) is greater than the melting point of XeO_3F_2 (diagram E).

(f) Identify the type(s) of intermolecular force(s) that the two substances have in common.

(g) Explain the difference in melting points based on the types and relative strengths of intermolecular forces.

(h) XeO_2F_2 reacts with SiO_2 to produce SiF_4 and XeO_3. The unbalanced chemical equation for the reaction appears below.

$$a\ XeO_2F_2 + b\ SiO_2 \rightarrow c\ SiF_4 + d\ XeO_3$$

Give the value of each of the following coefficients in the balanced equation.

$a =$
$b =$
$c =$
$d =$

frq3

12. **Directions: For parts of the free-response question that require calculations, clearly show the method used and the steps involved in arriving at your answers. You must show your work to receive credit for your answer. Examples and equations may be included in your answers where appropriate.**

While investigating the chemical and physical properties of metallic element E, a student conducts an experiment by combining $\mathrm{E}(s)$ and $\mathrm{HBr}(aq)$, which react according to the following equation.

$$\mathrm{E}(s) + 2\,\mathrm{HBr}(aq) \rightarrow \mathrm{EBr_2}(aq) + \mathrm{H_2}(g)$$

(a) Write the net-ionic equation for the reaction.

(b) In the reaction, is $\mathrm{E}(s)$ oxidized or reduced? Justify your answer in terms of oxidation numbers.

As shown in the following diagram, $10.00\,\mathrm{mL}$ samples of $\mathrm{HBr}(aq)$ of various concentrations are added to samples of $\mathrm{E}(s)$ in a closed test tube. At the start of each trial, the gas-collecting tube is filled completely with distilled water. The samples of $\mathrm{E}(s)$ react with $\mathrm{HBr}(aq)$, and the $\mathrm{H_2}(g)$ produced is collected in the gas-collecting tube.

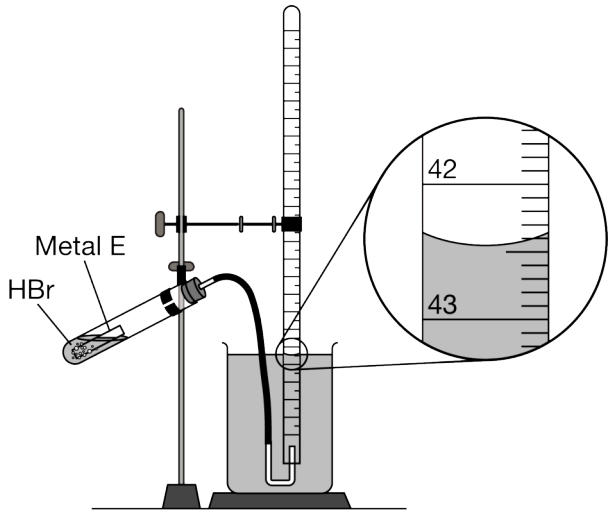

(c) The enlarged view of the gas-collecting tube at the end of trial 3 is shown in the diagram above. What should the student record as the volume, in mL, of $\mathrm{H_2}(g)$ collected in trial 3?

(d) In the laboratory, the temperature is $294\,\mathrm{K}$ and the total pressure in the gas-collecting tube is $754.7\,\mathrm{mmHg}$. If the vapor pressure of water at $294\,\mathrm{K}$ is $18.6\,\mathrm{mmHg}$, determine the pressure of the $\mathrm{H_2}(g)$ in the gas-collecting tube.

frq3

Trial	Initial Moles of $E(s)$	Initial $[HBr(aq)]$ (M)	Volume of $H_2(g)$ Produced (mL)
1	0.00150	0.200	24.52
2	0.00150	0.250	30.95
3	0.00150	0.350	?

(e) The data from all three trials are given above. A student claims that $E(s)$ is the limiting reactant in trial 1. Do you agree or disagree? Justify your answer with information in the data table.

(f) A certain pure compound containing element E is analyzed. The elemental composition of the compound is shown in the following table. Determine the empirical formula of the compound using the information in the table.

Element	Moles Present in the Compound
E	0.0652
C	0.130
O	0.260

(g) A different element, L, is located in the same row of the periodic table as element E, but L has roughly double the atomic mass of E. Is the atomic radius of L less than, equal to, or greater than the atomic radius of E? Justify your answer using principles of atomic structure.

(h) The ionic radii of elements E and a different metallic element, M, are shown in the following table. Both elements form oxides, EO and M_2O. If lattice energy is defined as the energy required to separate an ionic solid into individual separate gaseous ions, would the lattice energy of M_2O be less than, equal to, or greater than the lattice energy of the oxide EO? Justify your answer in terms of Coulomb's law.

Element	Ionic radius (pm)
E	110
M	150

frq3

13. **Directions: For parts of the free-response question that require calculations, clearly show the method used and the steps involved in arriving at your answers. You must show your work to receive credit for your answer. Examples and equations may be included in your answers where appropriate.**

While investigating the chemical and physical properties of metallic element E, a student conducts an experiment by combining $\mathrm{E}(s)$ and $\mathrm{HBr}(aq)$, which react according to the following equation.

$$\mathrm{E}(s) + 4\,\mathrm{HBr}(aq) \rightarrow \mathrm{EBr_4}(aq) + 2\,\mathrm{H_2}(g)$$

(a) Write the net-ionic equation for the reaction.

(b) In the reaction, is H being oxidized or reduced? Justify your answer using oxidation numbers.

As shown in the following diagram, in a closed test tube, $10.00\,\mathrm{mL}$ samples of $\mathrm{HBr}(aq)$ of various concentrations are added to samples of $\mathrm{E}(s)$. At the start of each trial, the gas-collecting tube is filled completely with distilled water. The samples of $\mathrm{E}(s)$ react with $\mathrm{HBr}(aq)$, and the $\mathrm{H_2}(g)$ produced is collected in the gas-collecting tube.

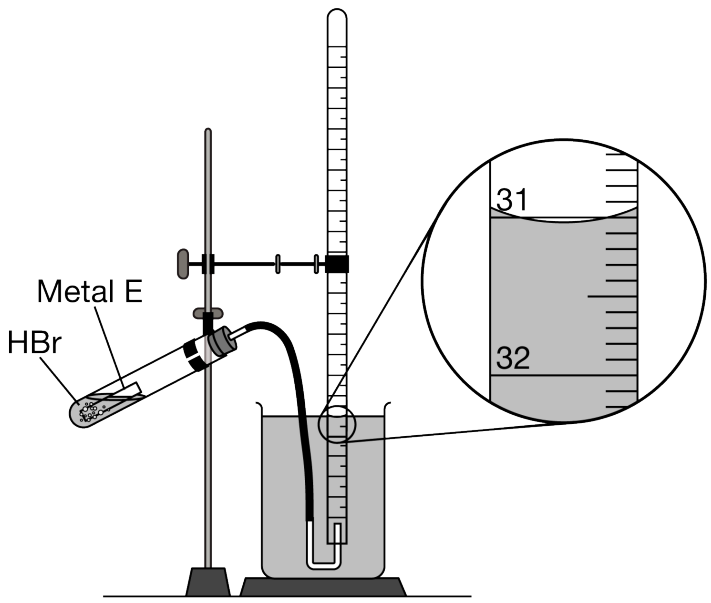

(c) The enlarged view of the gas-collecting tube at the end of trial 3 is shown in the diagram above. What should the student record as the volume, in mL, of $\mathrm{H_2}(g)$ collected in trial 3?

(d) In the laboratory, the temperature is $295\,\mathrm{K}$ and the total pressure in the gas-collecting tube is $741.2\,\mathrm{mmHg}$. If the vapor pressure of water at $295\,\mathrm{K}$ is $19.8\,\mathrm{mmHg}$, determine the pressure of the $\mathrm{H_2}(g)$ in the gas-collecting tube.

frq3

Trial	Initial Moles of $E(s)$	Initial $[HBr(aq)]$ (M)	Volume of $H_2(g)$ Produced (mL)
1	7.50×10^{-4}	0.150	18.60
2	7.50×10^{-4}	0.200	24.81
3	7.50×10^{-4}	0.250	?

(e) The data from all three trials are given above. A student claims that $E(s)$ is the limiting reactant in trial 2. Do you agree or disagree? Justify your answer with information in the data table.

(f) A certain pure compound containing element E is analyzed. The elemental composition of the compound is shown in the following table. Determine the empirical formula of the compound using the information in the table.

Element	Moles Present in the Compound
E	0.0339
C	0.136
O	0.272

(g) A different element, L, is located in the same column of the periodic table as element E, but L has roughly half the atomic mass of E. Is the atomic radius of L less than, equal to, or greater than the atomic radius of E? Justify your answer using principles of atomic structure.

(h) The ionic radii of ions X^- and Z^- are shown in the following table. Element E can bond with X or Z to form EX_4 or EZ_4, respectively. If lattice energy is defined as the energy required to separate an ionic solid into individual separate gaseous ions, would the lattice energy of EX_4 be less than, equal to, or greater than the lattice energy of EZ_4? Justify your answer in terms of Coulomb's law.

Element	Ionic radius (pm)
X^-	170
Z^-	120

frq3

14.

Nonmetal	C	N	O	Ne	Si	P	S	Ar
Formula of Compound	CF_4	NF_3	OF_2	No compound	SiF_4	PF_3	SF_2	No compound

Some binary compounds that form between fluorine and various nonmetals are listed in the table above. A student examines the data in the table and poses the following hypothesis: the number of F atoms that will bond to a nonmetal is always equal to 8 minus the number of valence electrons in the nonmetal atom.

a. Based on the student's hypothesis, what should be the formula of the compound that forms between chlorine and fluorine?

b. In an attempt to verify the hypothesis, the student researches the fluoride compounds of the other halogens and finds the formula ClF_3. In the box below, draw a complete Lewis electron-dot diagram for a molecule of ClF_3.

c. Two possible geometric shapes for the ClF_3 molecule are trigonal planar and T-shaped. The student does some research and learns that the molecule has a dipole moment. Which of the two shapes is consistent with the fact that the ClF_3 molecule has a dipole moment? Justify your answer in terms of bond polarity and molecular structure.

In an attempt to resolve the existence of the ClF_3 molecule with the hypothesis stated above, the student researches the compounds that form between halogens and fluorine, and assembles the following list.

Halogen	Formula(s)
F	F_2
Cl	
Br	BrF, BrF_3, BrF_5
I	IF, IF_3, IF_5, IF_7

d. Based on concepts of atomic structure and periodicity, propose a modification to the student's previous hypothesis to account for the compounds that form between halogens and fluorine.

frq3

15.

Compound	Melting Point (°C)
LiI	449
KI	686
LiF	845
NaF	993

A student learns that ionic compounds have significant covalent character when a cation has a polarizing effect on a large anion. As a result, the student hypothesizes that salts composed of small cations and large anions should have relatively low melting points.

a. Select two compounds from the table and explain how the data support the student's hypothesis.

b. Identify a compound from the table that can be dissolved in water to produce a basic solution. Write the net ionic equation for the reaction that occurs to cause the solution to be basic.

frq3

16.

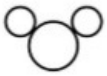

H_2O molecule

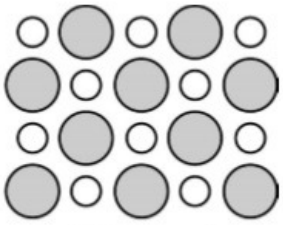

LiCl crystal

The structures of a water molecule and a crystal of LiCl(*s*) are represented above. A student prepares a 1.0 *M* solution by dissolving 4.2 g of LiCl(*s*) in enough water to make 100 mL of solution.

a. In the space provided below, show the interactions of the components of LiCl(*aq*) by making a drawing that represents the different particles present in the solution. Base the particles in your drawing on the particles shown in the representations above. Include only one formula unit of LiCl and no more than ten molecules of water. Your drawing must include the following details.

• identity of ions (symbol and charge)

• the arrangement and proper orientation of the particles in the solution

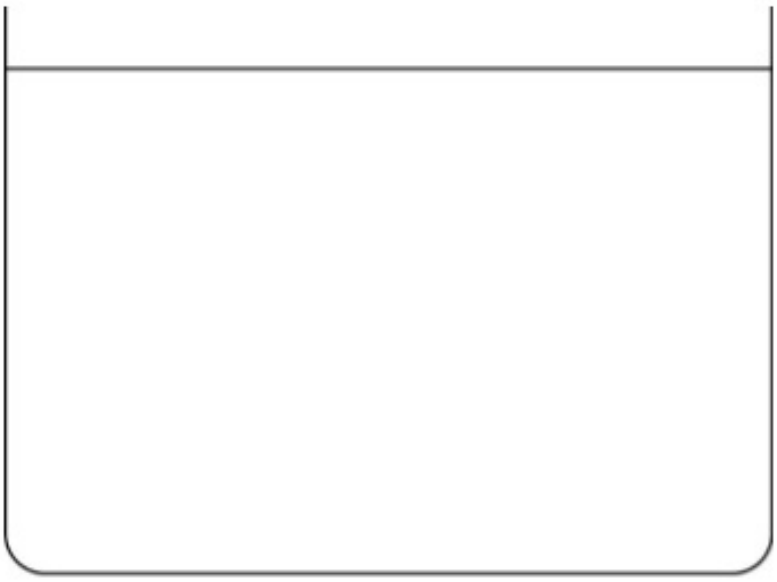

LiCl (*aq*)

b. The student passes a direct current through the solution and observes that chlorine gas is produced at the anode. Identify the chemical species produced at the cathode and justify your answer using the information given in the table below.

frq3

Half-reaction	Standard Reduction Potential at 25°C (V)
$Li^+(aq) + e^- \rightarrow Li(s)$	− 3.05
$2\ H_2O(l) + 2\ e^- \rightarrow H_2(g) + 2\ OH^-(aq)$	− 0.83

frq3

17. For parts of the free response question that require calculations, clearly show the method used and the steps involved in arriving at your answers. You must show your work to receive credit for your answer. Examples and equations may be included in your answers where appropriate.

The three stable isotopes of Mg are Mg-24, Mg-25, and Mg-26. A rock sample from another planet has a different distribution of the three stable isotopes than what is found on Earth. A partial mass spectrum for Mg in the rock sample is shown below.

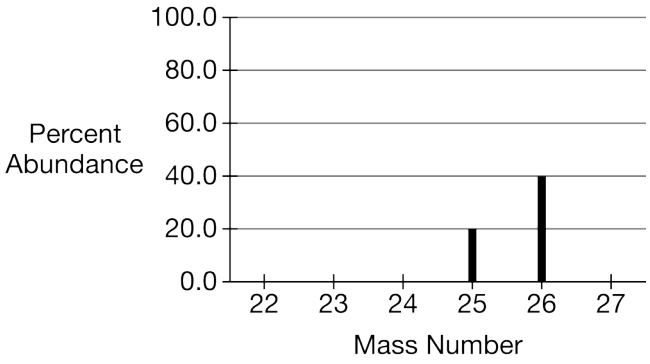

(a) Draw a line on the graph to show the mass of the missing isotope and its percent abundance.

(b) Use the completed mass spectrum to calculate the average atomic mass of Mg on the other planet.

(c) The first ionization energy of magnesium samples found on Earth is experimentally determined to be $736\ \mathrm{kJ/mol}$. If a similar experiment is conducted to determine the first ionization energy of magnesium in the rock sample from another planet, will it be greater than, less than, or equal to the first ionization energy of magnesium found on Earth? Explain your reasoning.

	Successive Ionization Energies (kJ/mol)		
	First	Second	Third
Mg	736	1450	7740
Unknown element	496	4560	6910

(d) A table of successive ionization energies for Mg and an unknown element is shown above. Predict the identity of the unknown element.