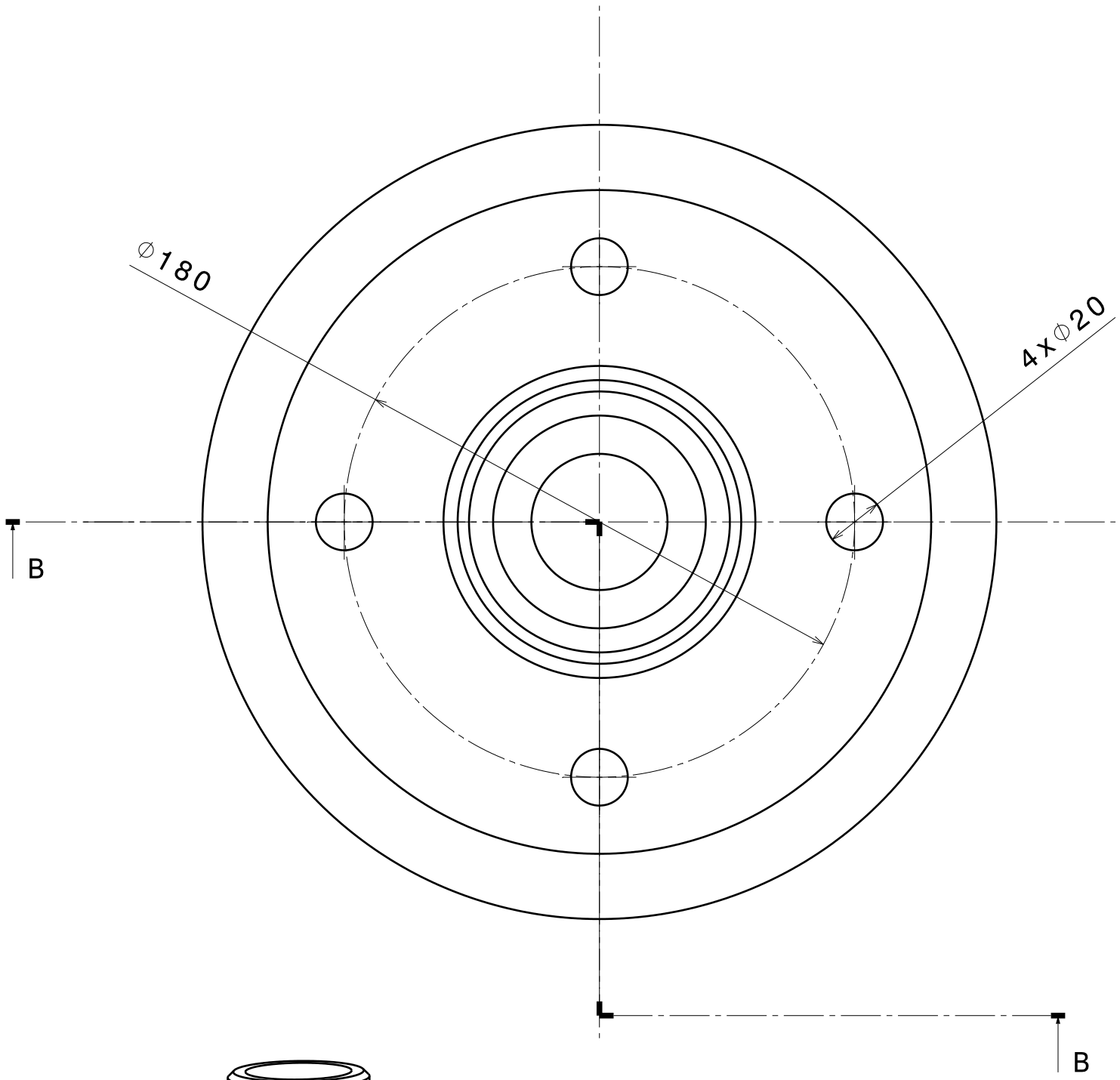

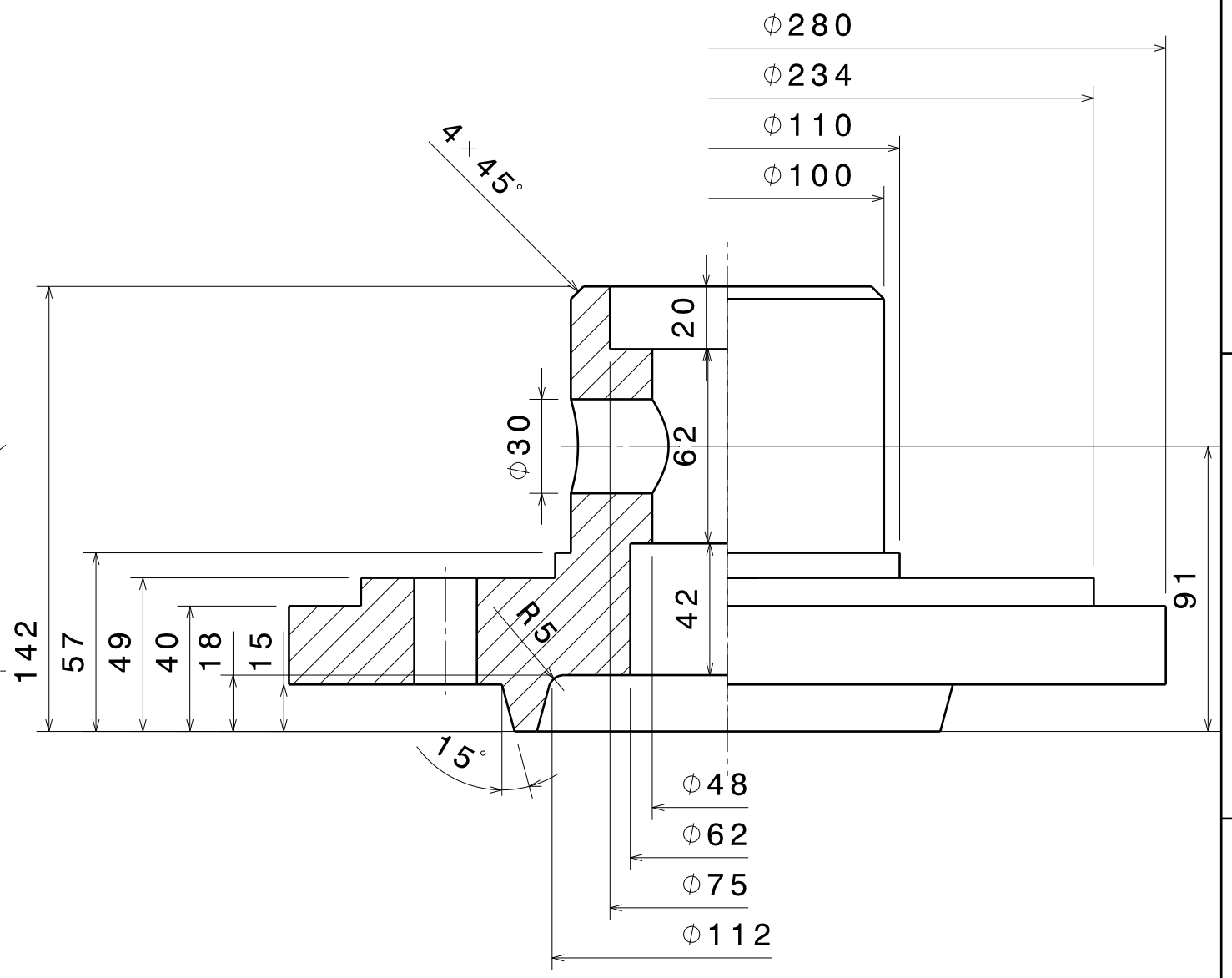

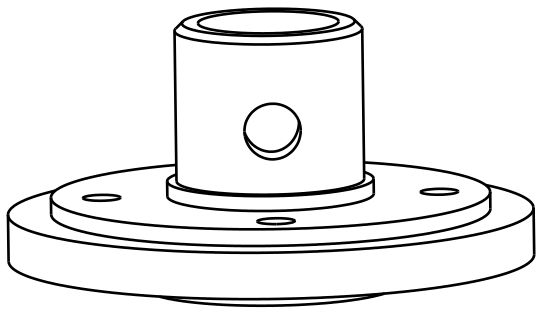

Isometric view
Scale: 1:4

DESIGNED BY: Valentina Giannotti DATE: 01/02/2024		Prototipazione Virtuale	
CHECKED BY: Giuseppe di Gironimo DATE: XXX			
SIZE A3		Università di Napoli Federico II	
SCALE 1:2	WEIGHT (kg) 18,22	DRAWING NUMBER PV2324_ES0202	SHEET 1/1

This drawing is our property; it can't be reproduced or communicated without our written agreement.

I	_
H	_
G	_
F	_
E	_
D	_
C	_
B	_
A	_