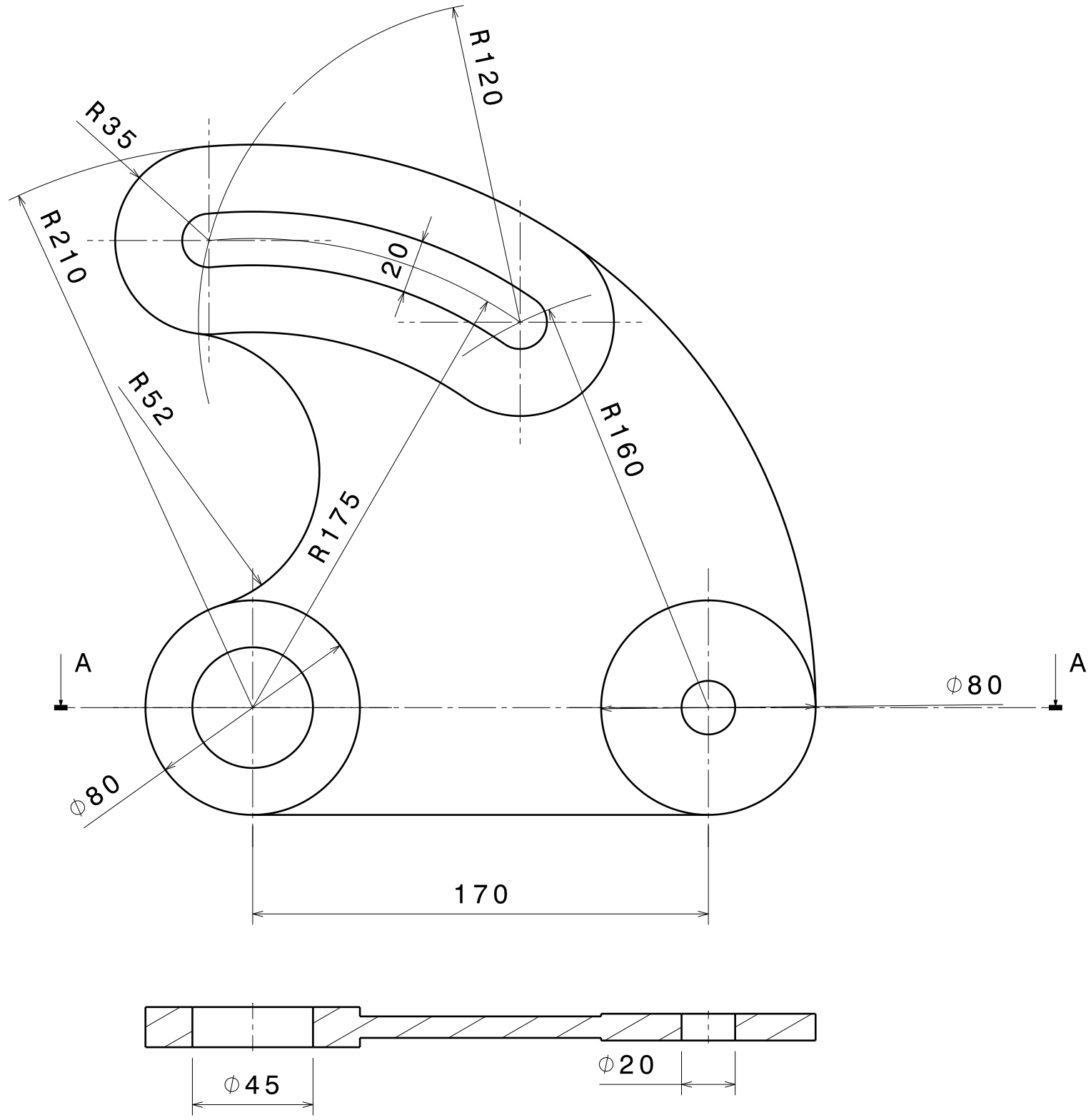


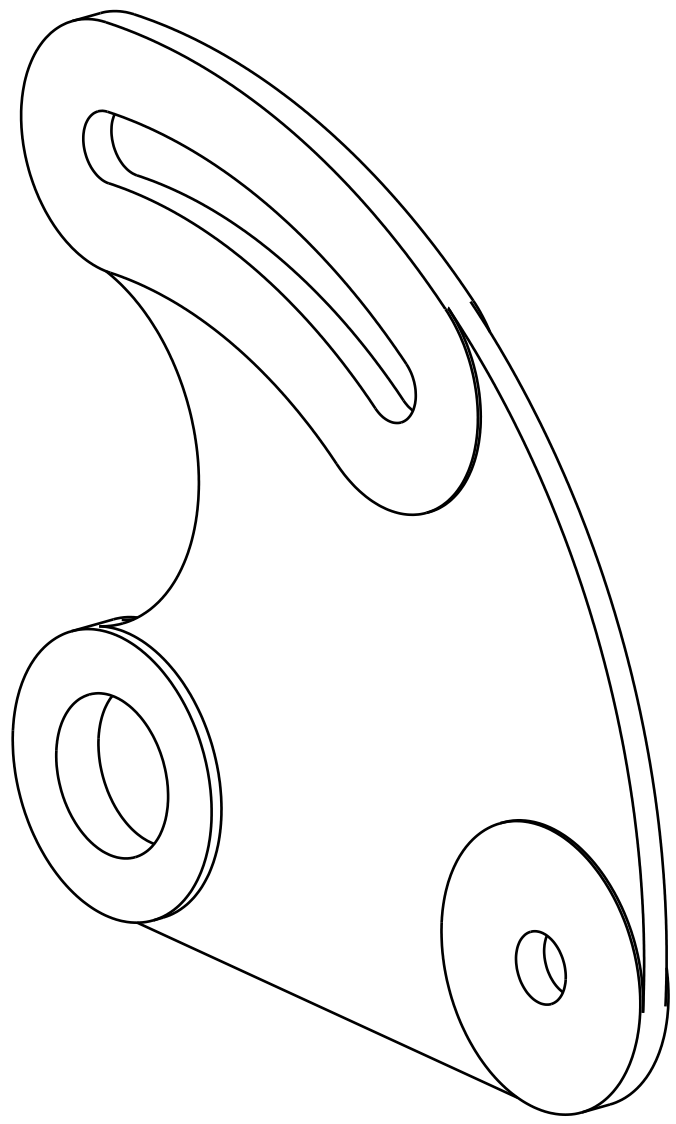

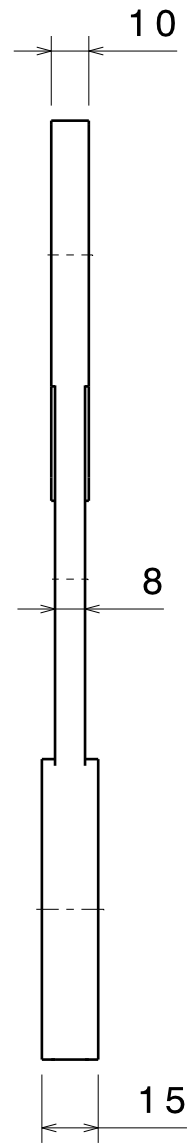


Isometric view
Scale: 1:2

| | | | |
|---|---|---|---|
| DESIGNED BY: Valentina Giannotti<br>DATE: 03/12/2023 | | Prototipazione Virtuale | |
| CHECKED BY: Giuseppe di Gironimo<br>DATE: XXX | | | |
| SIZE A3 | | Università di Napoli Federico II | |
| SCALE 1:2 | WEIGHT (kg) 3,06 | DRAWING NUMBER PV2324_ES0105 | SHEET 1/1 |

This drawing is our property; it can't be reproduced or communicated without our written agreement.