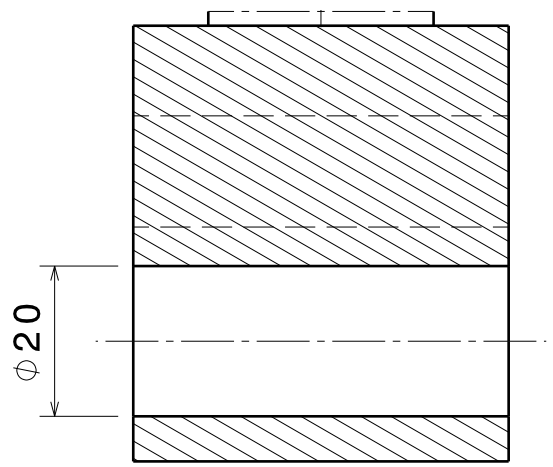

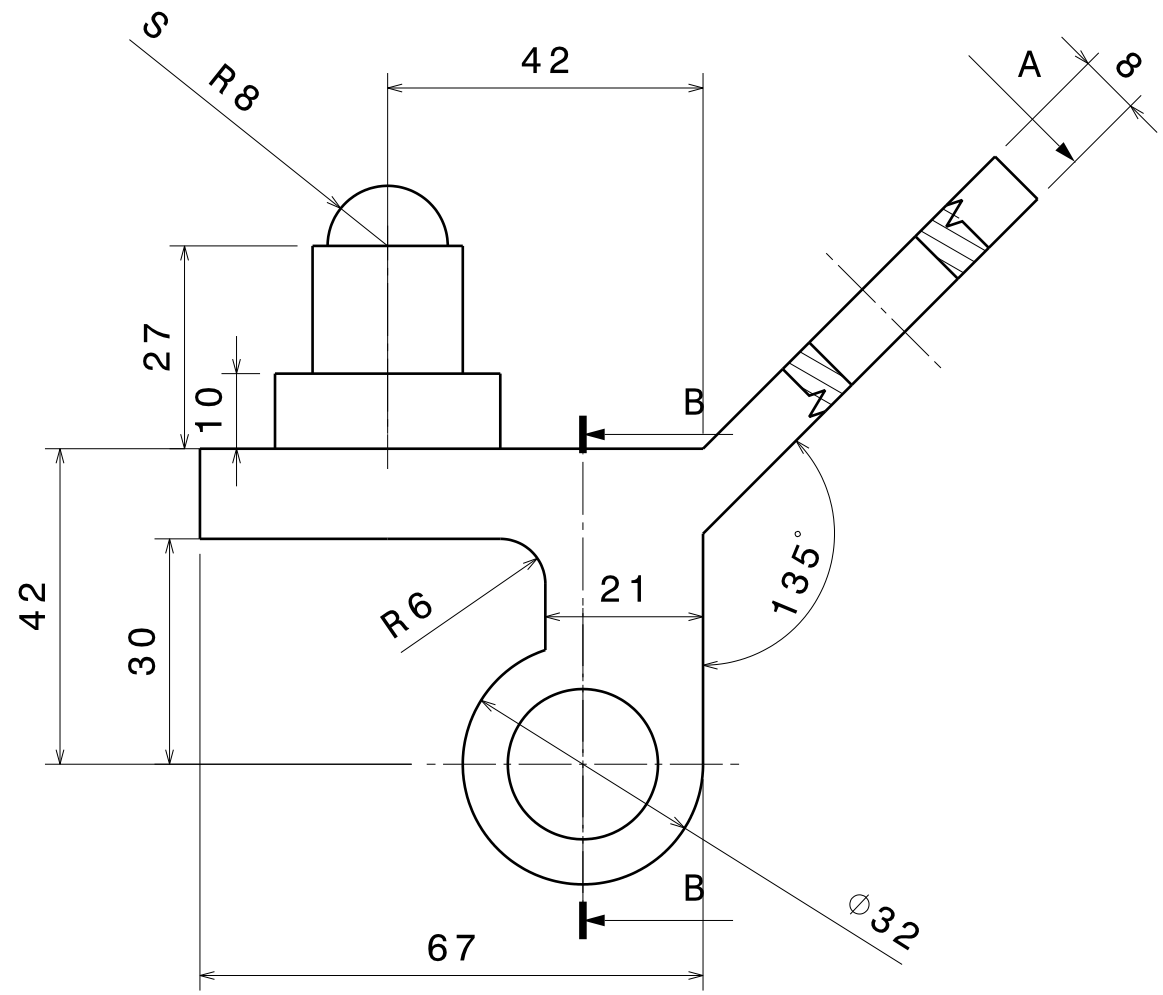

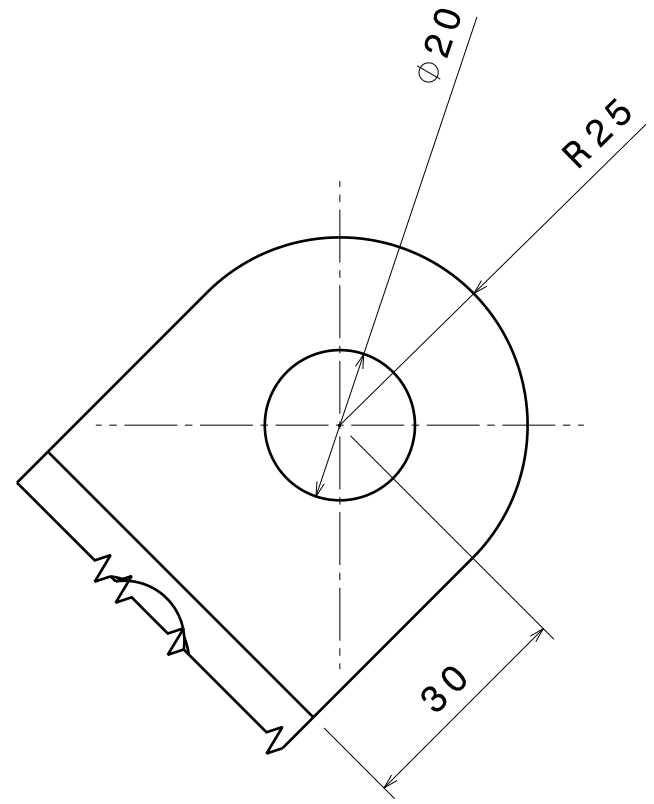

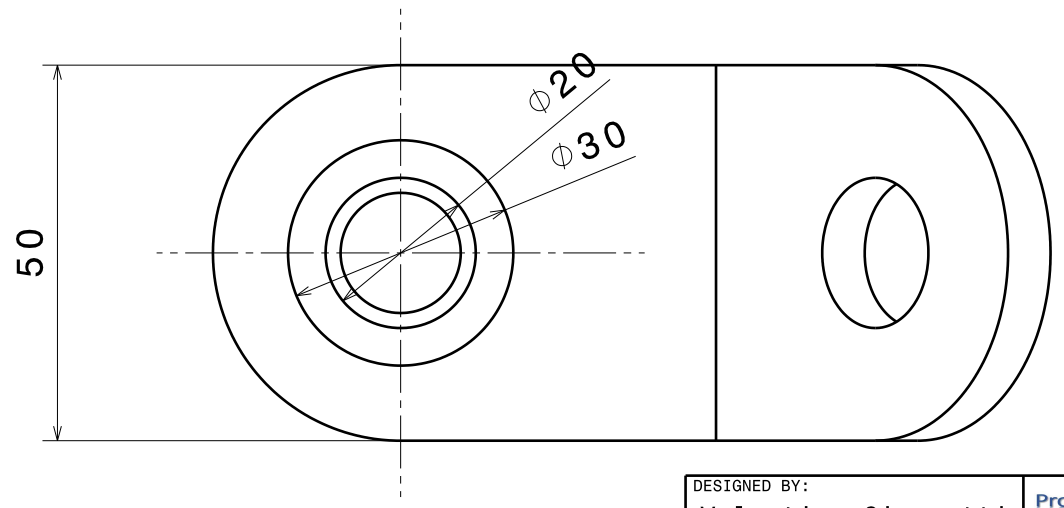

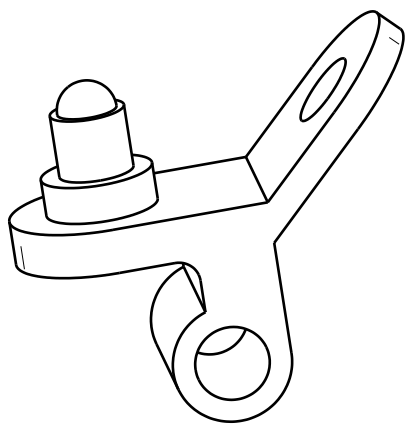

Isometric view
Scale: 1:2

DESIGNED BY: Valentina Giannotti DATE: 06/02/2024	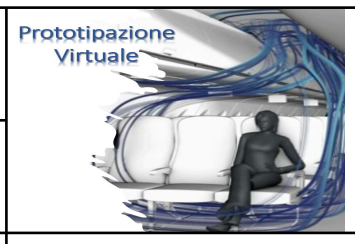	Prototipazione Virtuale	
CHECKED BY: Giuseppe di Gironimo DATE: XXX			
SIZE A3		Università di Napoli Federico II	
SCALE 1:1	WEIGHT (kg) 0,11	DRAWING NUMBER PV2023_ES0205	SHEET 1/1

This drawing is our property; it can't be reproduced or communicated without our written agreement.