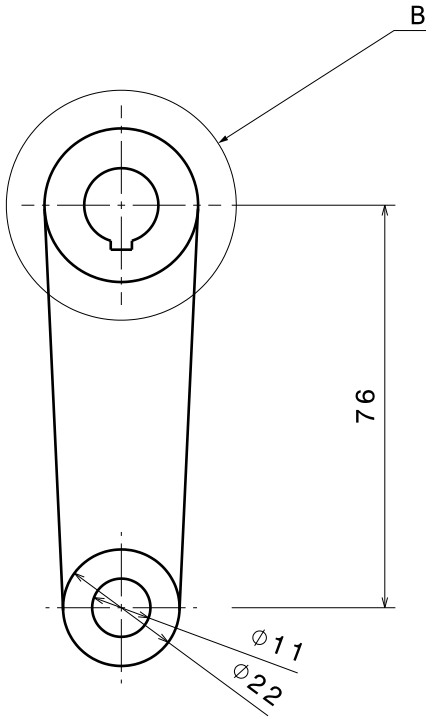

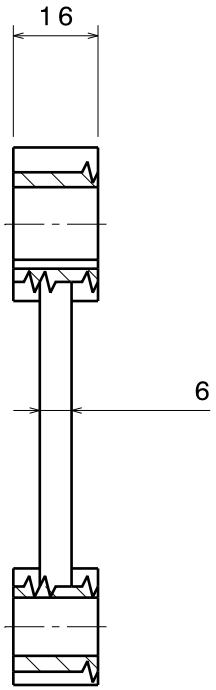

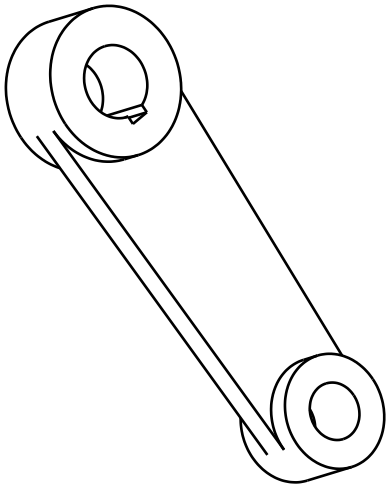

Vista isometrica
8)MANOVELLA

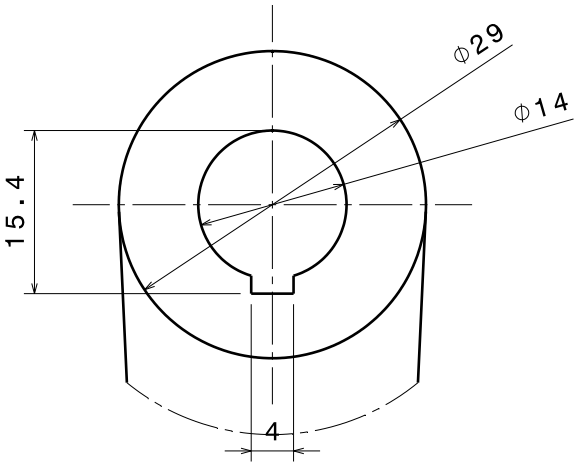

Dettaglio B
Scala: 2:1

8)MANOVELLA

DESIGNED BY: ANDREA MORGHEN DATE: 09/12/2023	Prototipazione Virtuale	Prototipazione Virtuale	
CHECKED BY: XXX DATE: XXX			
SIZE A3		Università di Napoli Federico II	
SCALE 1:1	WEIGHT (kg) 1,51	DRAWING NUMBER PV2324_ES0308	SHEET 6/6

This drawing is our property; it can't be reproduced or communicated without our written agreement.