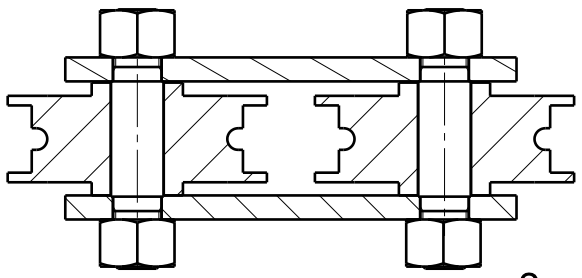

Section view A-A

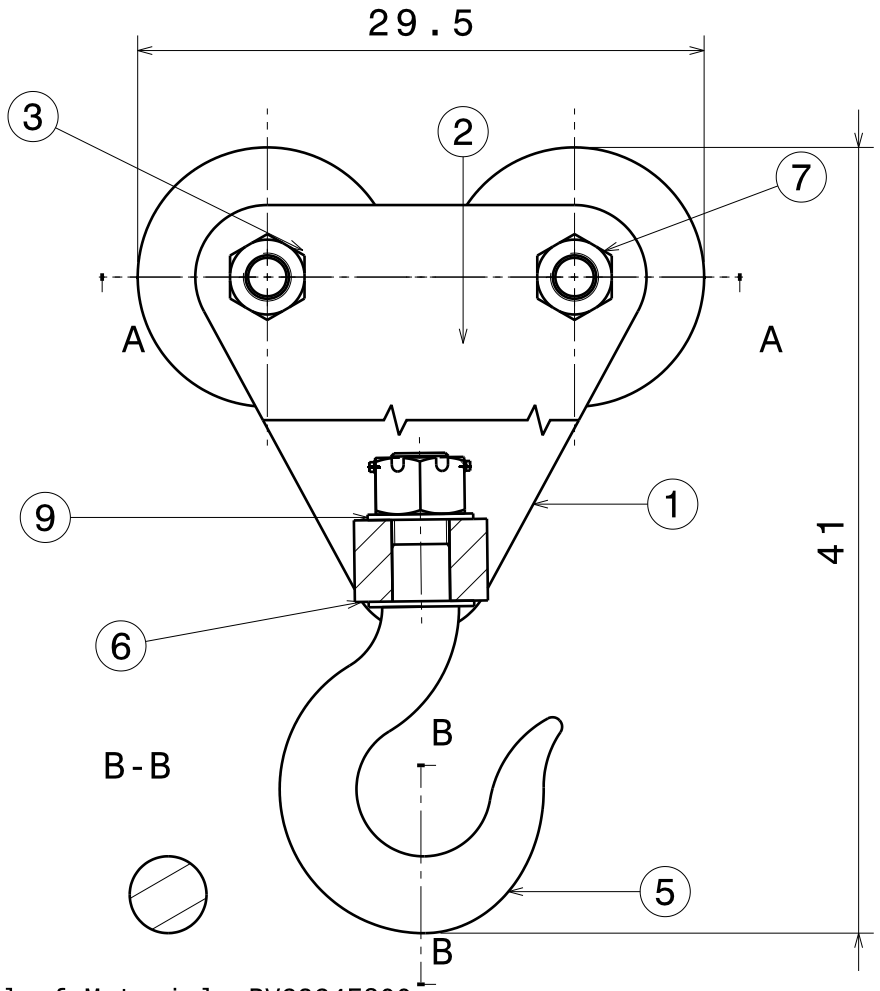

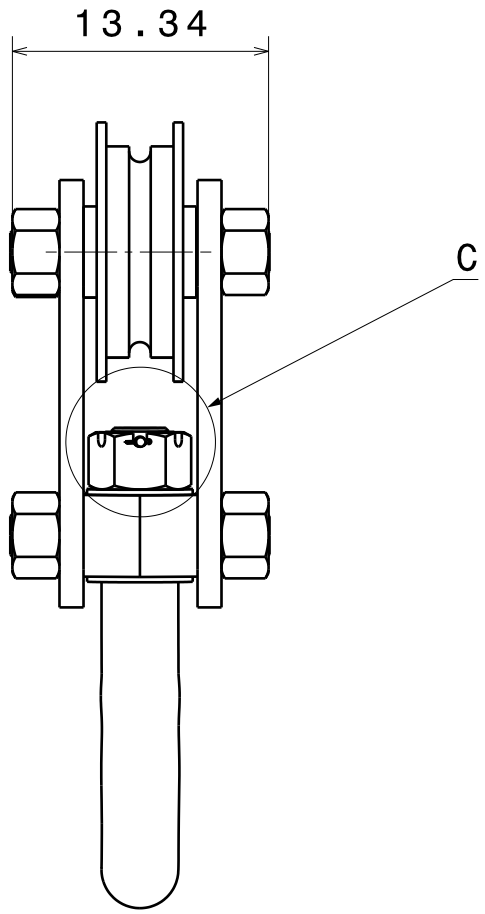

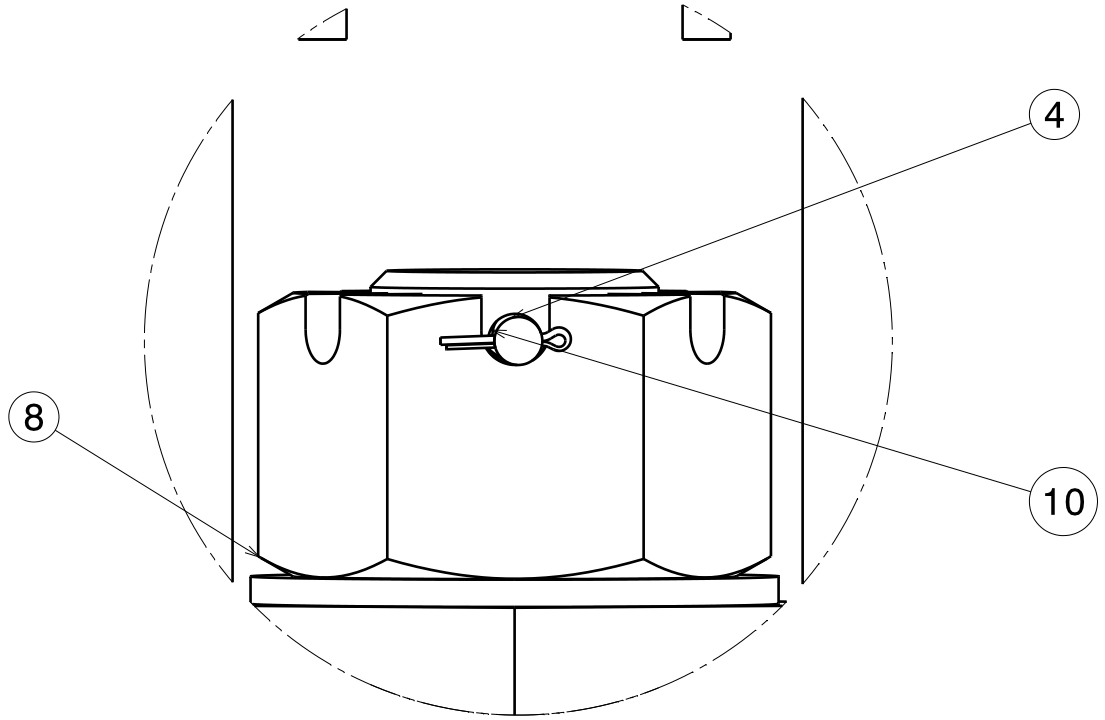

Detail C
Scale: 1:2

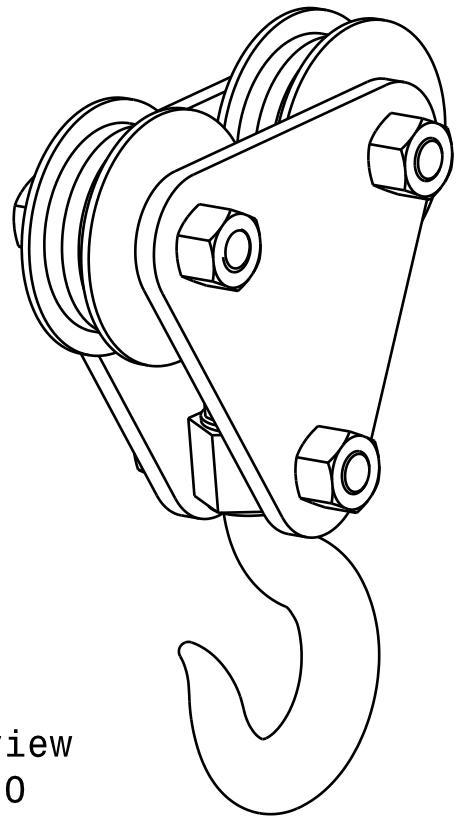

Isometric view
Scale: 1:10

Bill of Material: PV2324ES00

Quantity	Part Number	Nomenclature
2	PV2324ES0401	Side Plate
2	PV2324ES0402	Pulley
2	PV2324ES0403	Pulley pin
1	PV2324ES04004	Nut lock pin
1	PV2324ES0405	crane hook
1	PV2324ES0406	Hook turnion
6	ASME B18.2.2 NUT 2_1/2 UNC STEEL HEAVY HEXAGON	STEEL HEAVY HEXAGON
1	ASME B18.2.2 NUT 3 UNC STEEL HEAVY HEX SLOTTED	STEEL HEAVY HEX SLOTTED
2	ANSI B18.22.1 WASHER 3 (1)	WASHER
2	ASME B18.8.1 PIN 1/8 x 1 STEEL EXTENDED PRONG COTTER	COTTER PIN

DESIGNED BY: Ludovica Ruggiero
DATE: 16/11/2023
CHECKED BY: XXX
DATE: XXX
SIZE: A3
SCALE: 1:10
WEIGHT (kg): XXX

Prototipazione Virtuale

Università di Napoli Federico II

DRAWING NUMBER: XXX
SHEET: 1/1

This drawing is our property; it can't be reproduced or communicated without our written agreement.