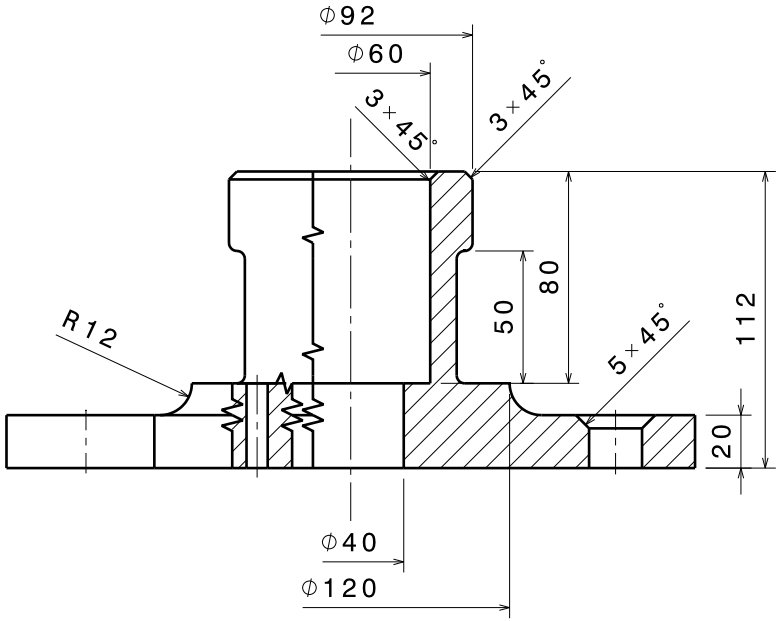

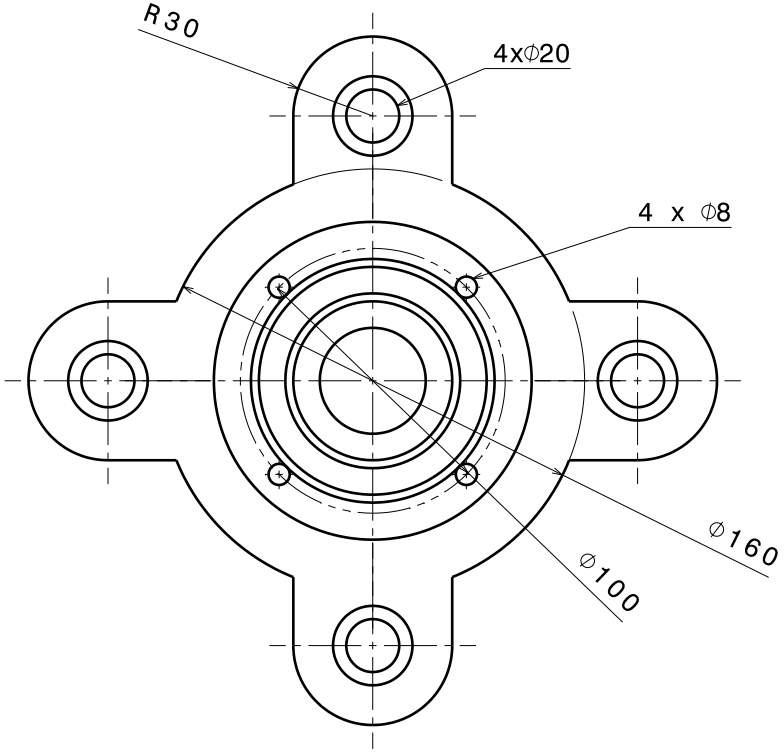

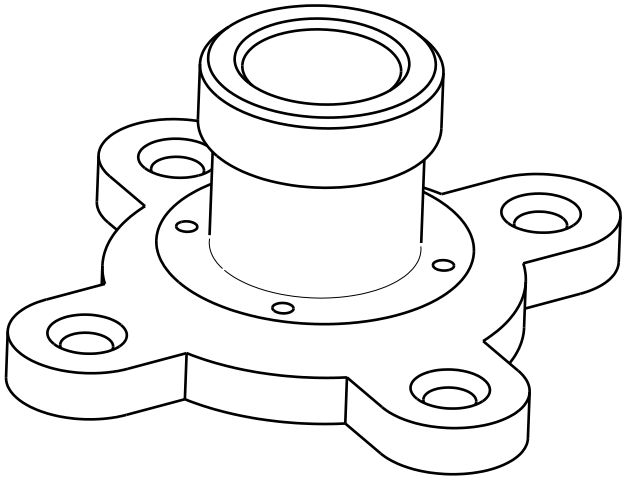

Vista isometrica

DESIGNED BY: Andrea Morghen DATE: 02/02/2024	Prototipazione Virtuale	Prototipazione Virtuale	
CHECKED BY: XXX DATE: XXX			
SIZE A3		Università di Napoli Federico II	
SCALE 1:2	WEIGHT (kg) 0,92	DRAWING NUMBER PV2324_ES0206	SHEET 1/1

This drawing is our property; it can't be reproduced or communicated without our written agreement.