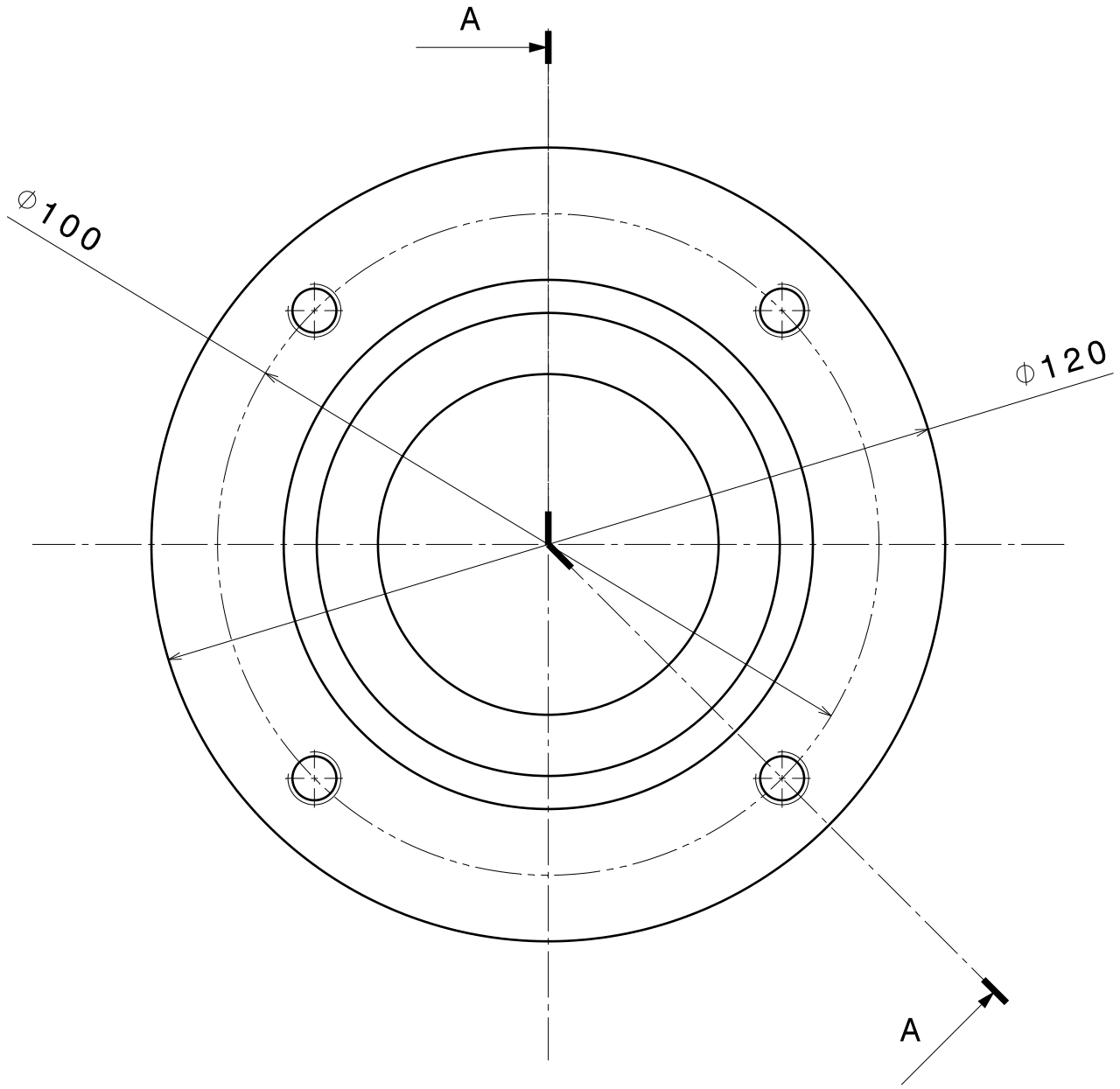

Section view A-A

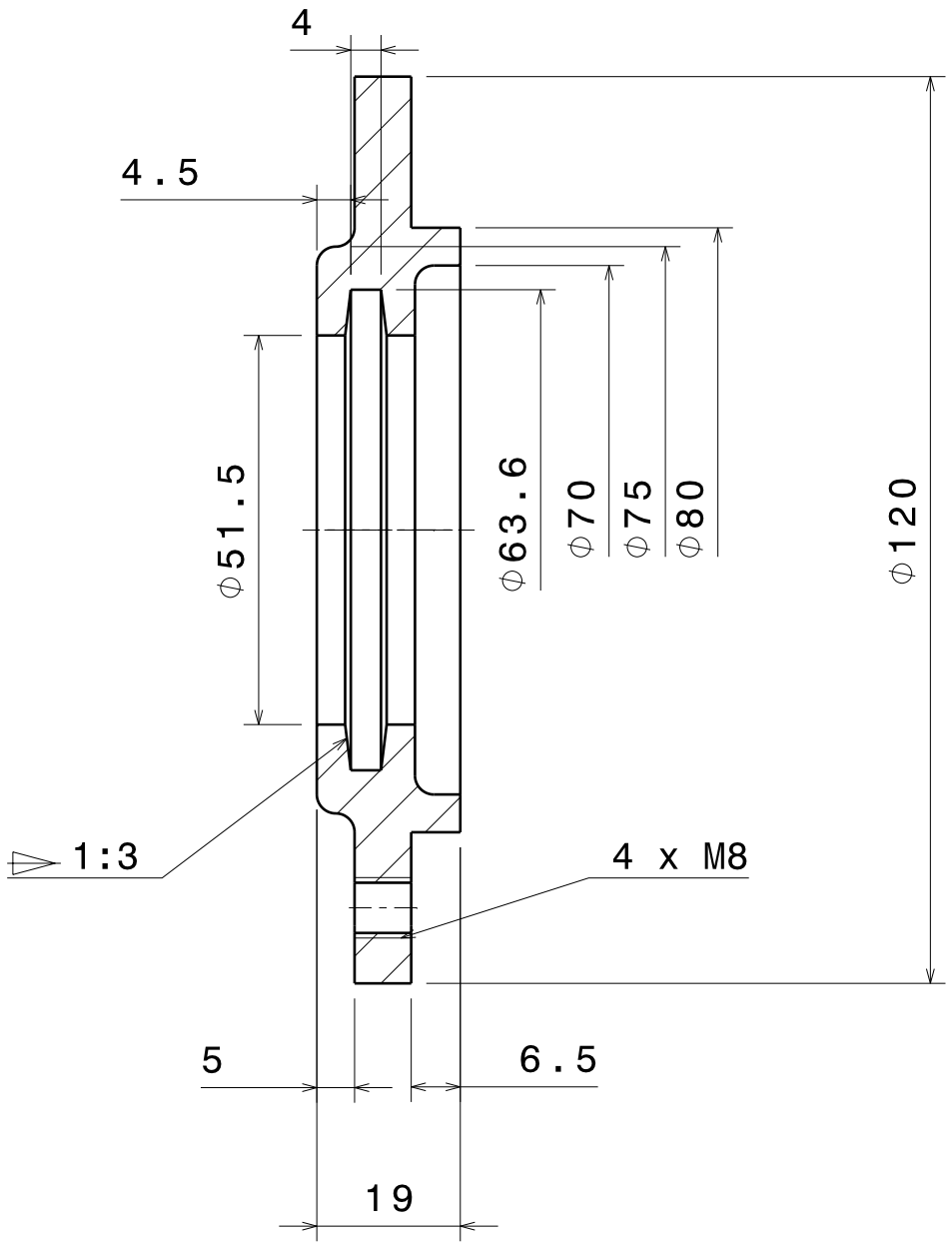

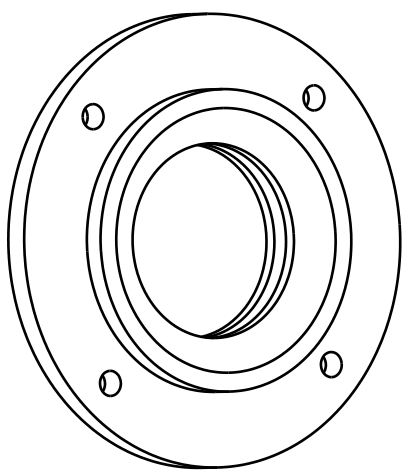

Isometric view
Scale: 1:2

Raccordi non quotati R2,5

DESIGNED BY: Ludovica Ruggiero DATE: 04/01/2024	Prototipazione Virtuale		
CHECKED BY: XXX DATE: XXX			
SIZE A3	Università di Napoli Federico II		
SCALE 1:1	WEIGHT (kg) 0,08	DRAWING NUMBER PV2324_ES08002	SHEET 1/1

This drawing is our property; it can't be reproduced or communicated without our written agreement.