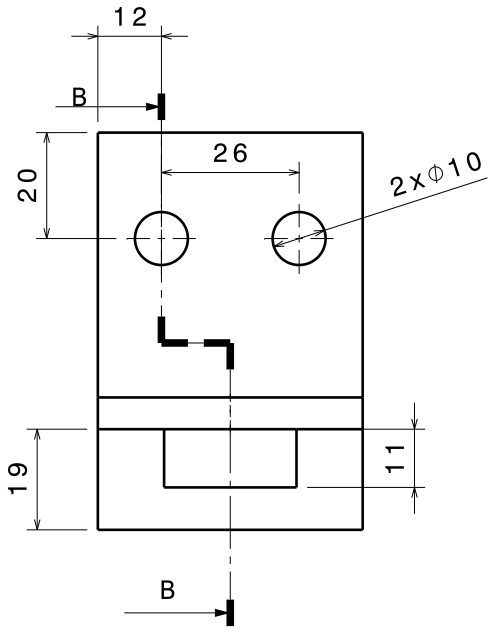

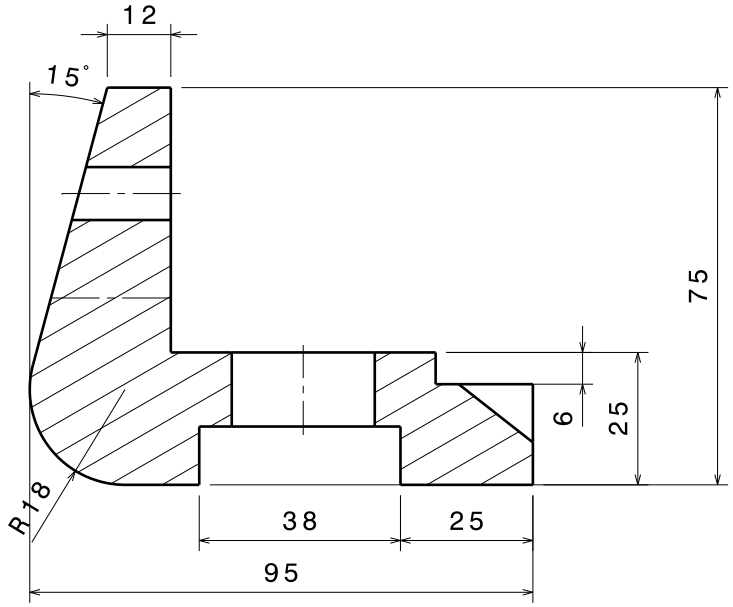

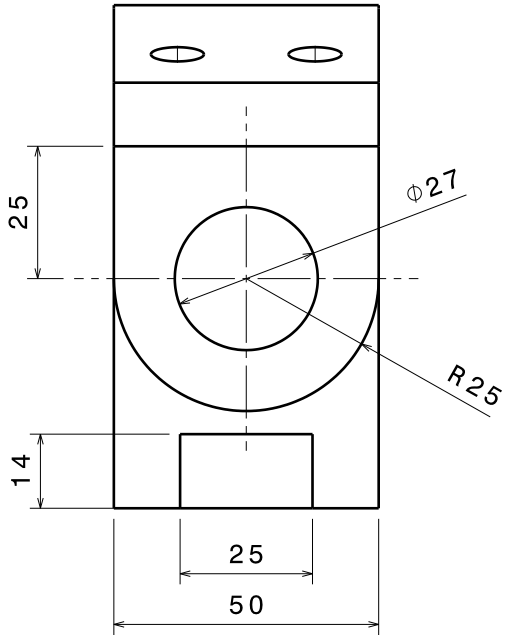

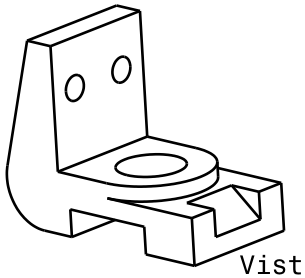

Vista isometrica
Scala: 1:2

DESIGNED BY: ANDREA MORGHEN DATE: 11/12/2023		Prototipazione Virtuale	
CHECKED BY: XXX DATE: XXX			
SIZE A3		Università di Napoli Federico II	
SCALE 1:1	WEIGHT (kg) 0,12	DRAWING NUMBER PV2324_ES0201	SHEET 1/1

This drawing is our property; it can't be reproduced or communicated without our written agreement.