Vista in sezione A-A

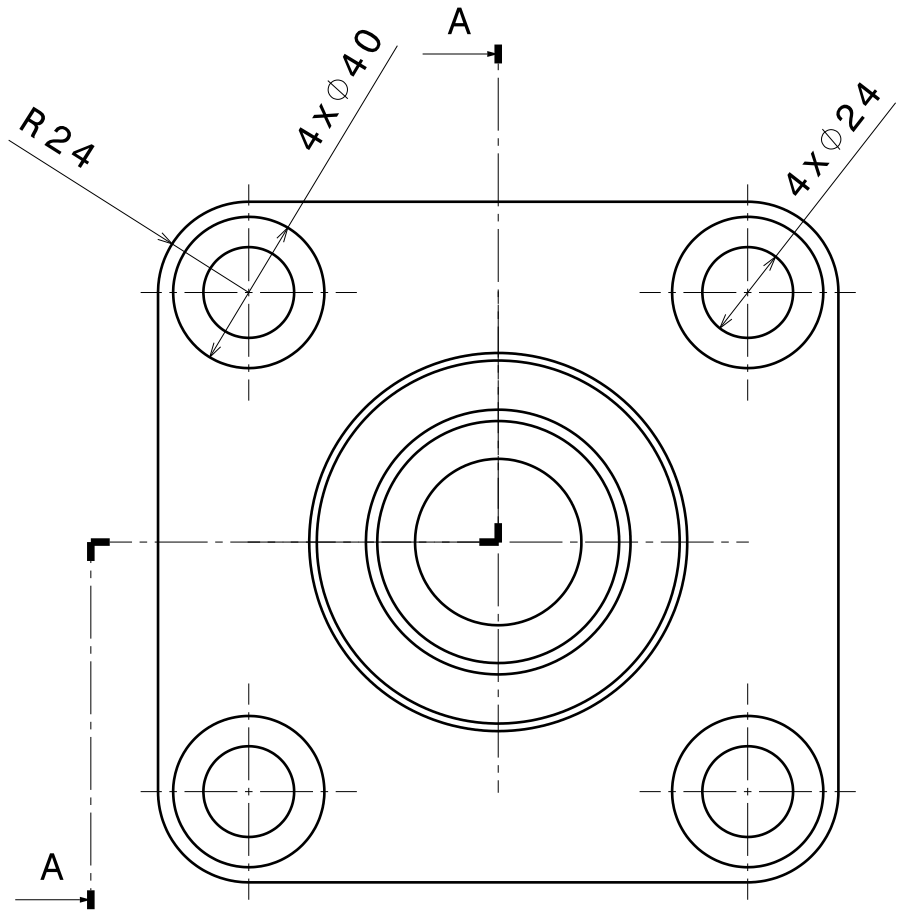

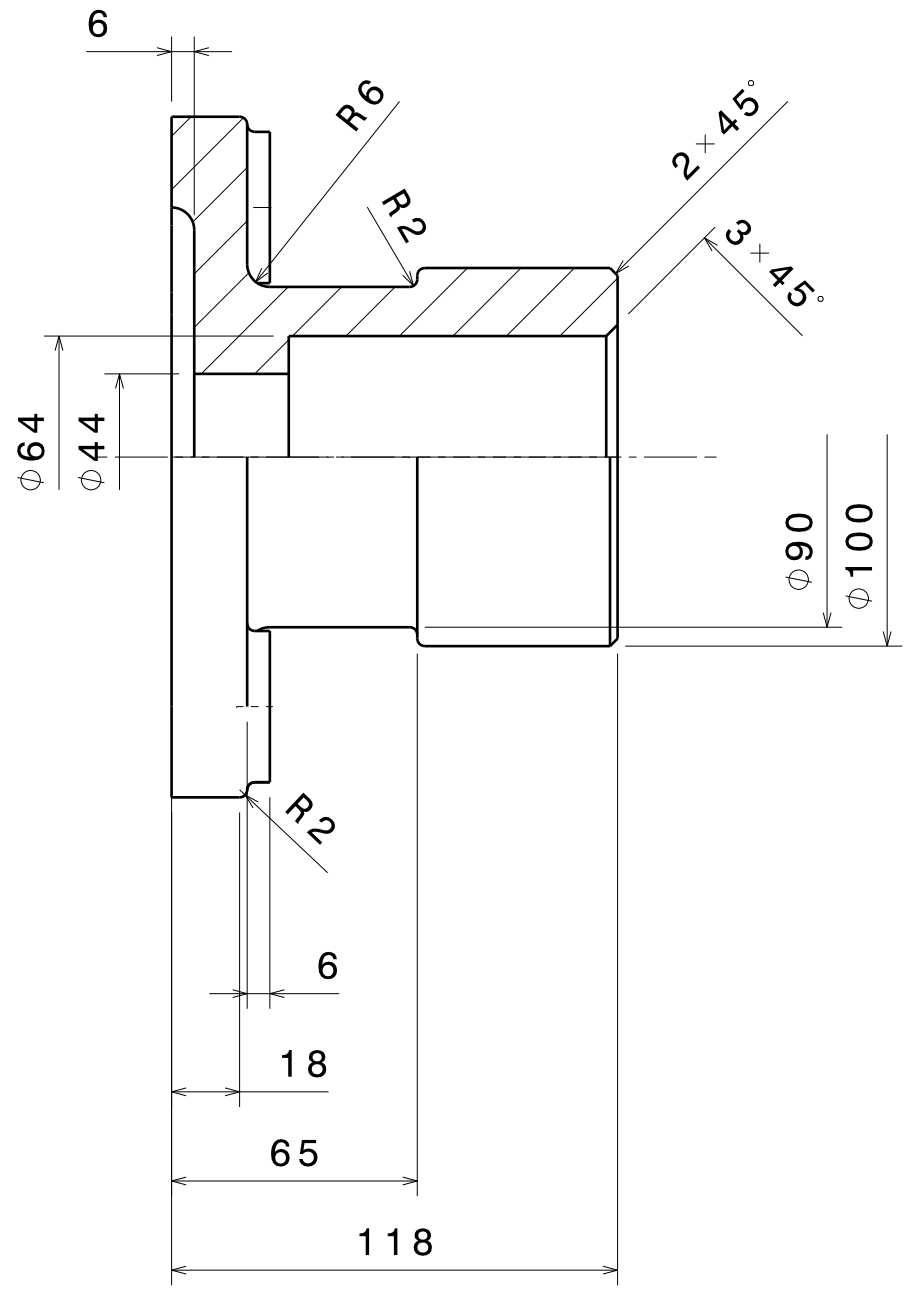

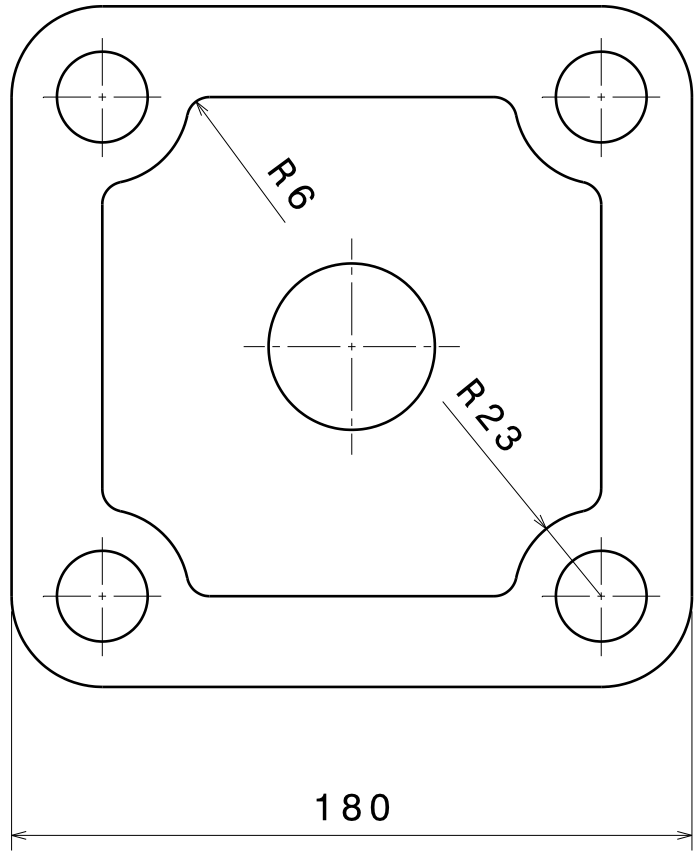

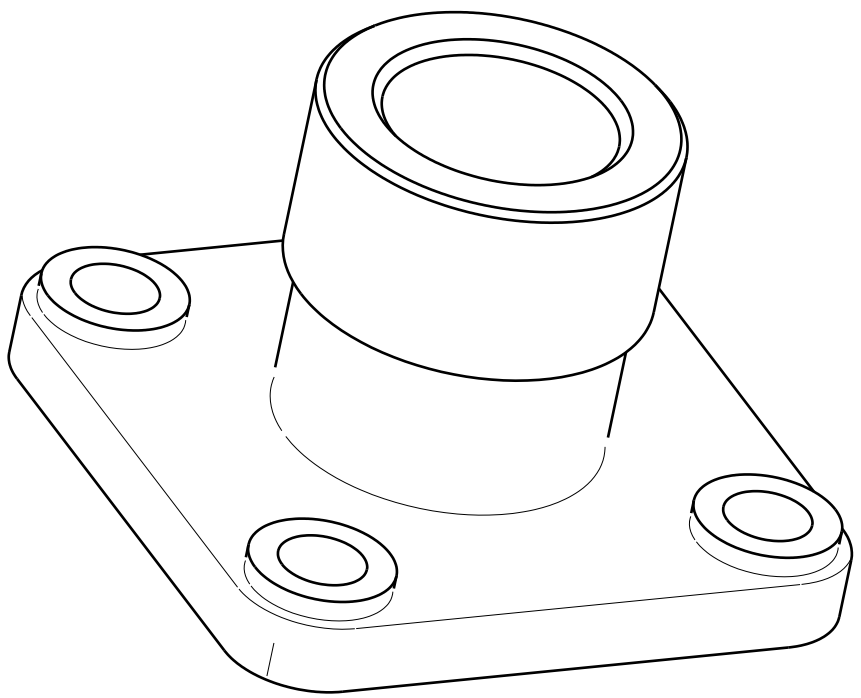

Isometric view
Scale: 1:2

DESIGNED BY: Ludovica Ruggiero DATE: 30/12/2023	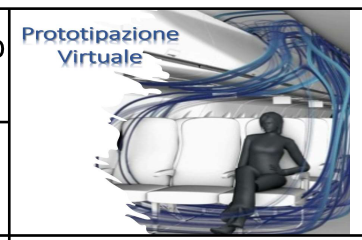	Protipazione virtuale	
CHECKED BY: XXX DATE: XXX			
SIZE A3		Università di Napoli Federico II	
SCALE 1:2	WEIGHT (kg) 0,92	DRAWING NUMBER PV2324_ES0204	SHEET 1/1

This drawing is our property; it can't be reproduced or communicated without our written agreement.

I	_
H	_
G	_
F	_
E	_
D	_
C	_
B	_
A	_