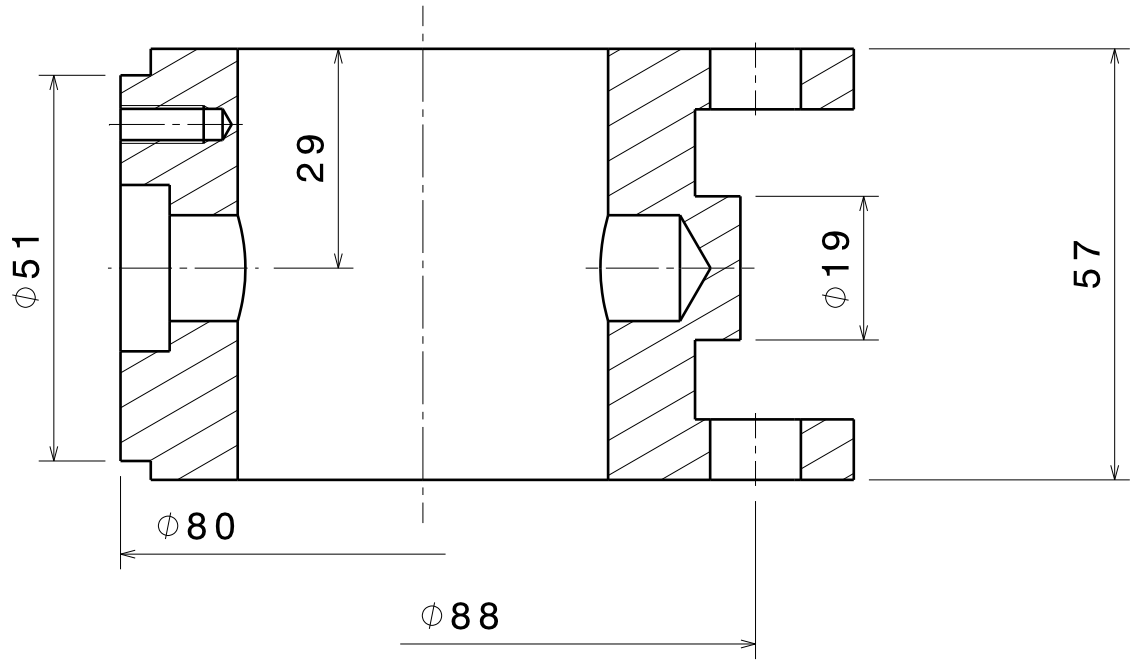

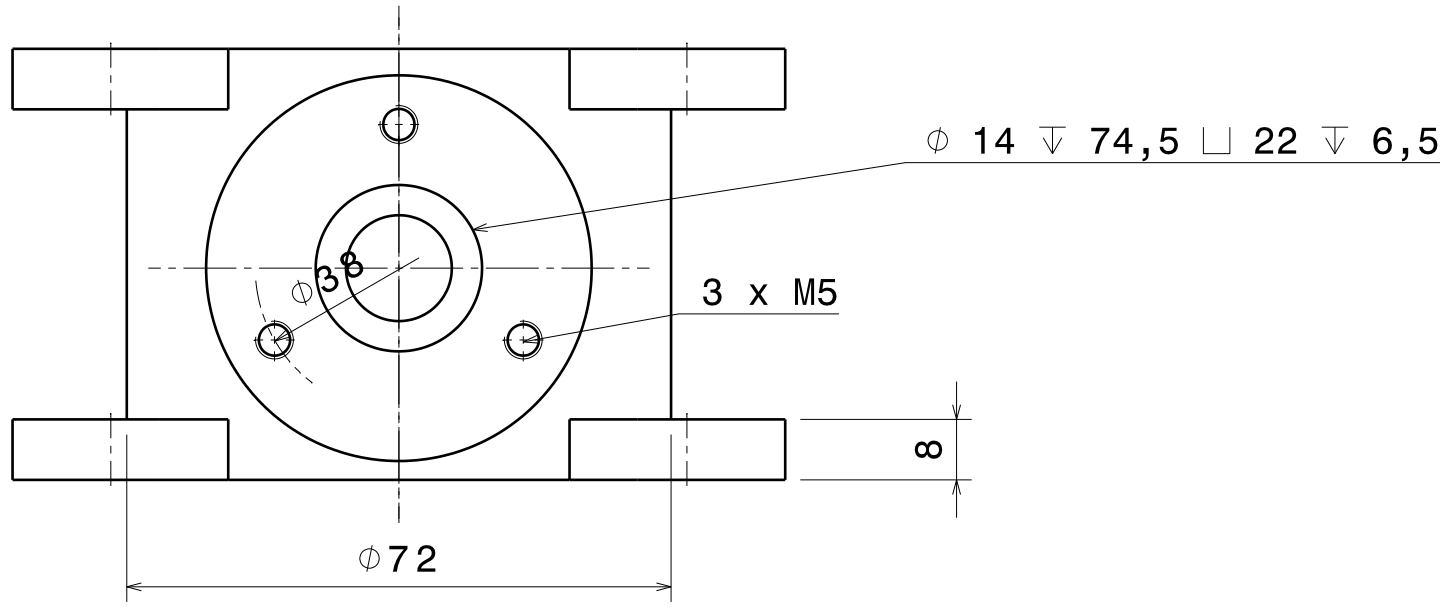

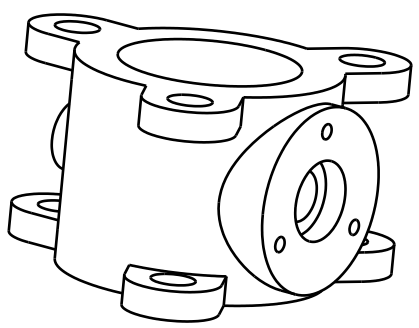

Isometric view
Scale: 1:2

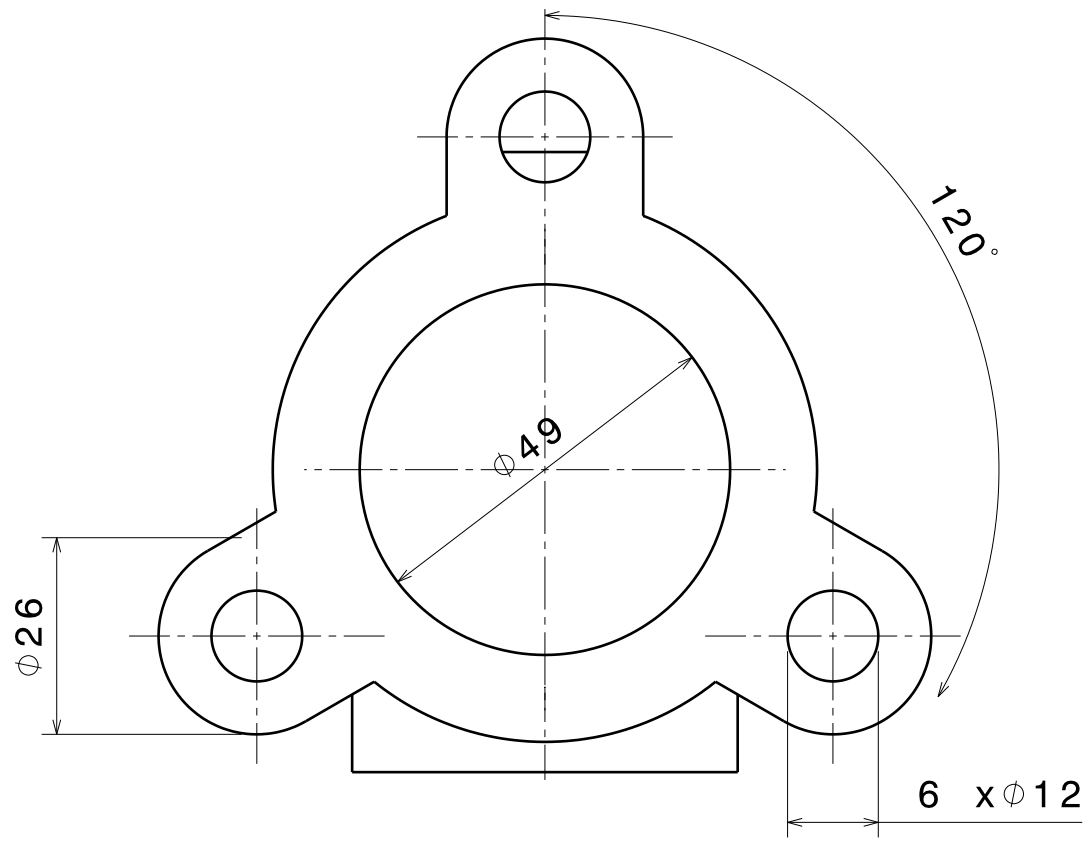

DESIGNED BY: Ludovica Ruggiero DATE: 21/12/2023		Prototipazione Virtuale	
CHECKED BY: XXX DATE: XXX			
SIZE A3		Università di Napoli Federico II	
SCALE 1:1	WEIGHT (kg) 1,24	DRAWING NUMBER PV2324_ES0301	SHEET 1/1

This drawing is our property; it can't be reproduced or communicated without our written agreement.