Revisiting the classical Graef and Andrews Dynamical Model to Simulate Anerobic Digestors

Rodolfo Salazar Peña
Luftmann Technologies

December 23, 2025

Abstract

Anaerobic digesters are widely used for the treatment of wastewater with high organic loads while simultaneously producing biogas as a renewable energy source. Despite their advantages, these systems are prone to operational instability, particularly acidification caused by the accumulation of volatile fatty acids. Among the earliest dynamic models addressing this issue is the classical Graef and Andrews model, which provides a relatively simple yet insightful framework for analyzing anaerobic digestion dynamics and pH-related stability. In this work, the Graef and Andrews model is reproduced and implemented in Simulink, following the formulation and simulations reported by Bailey and Ollis. The model integrates the biological, liquid, and gas phases of the digester, incorporating Haldane-type kinetics, gas–liquid mass transfer, and acid–base equilibria to monitor pH behavior. Open-loop simulations are conducted to analyze the system response to step changes in influent substrate concentration and flow rate, revealing the conditions under which the digester can auto-stabilize or undergo acidification. Additionally, a pH-based control strategy using staged relay activation and inert gas injection is implemented and evaluated in closed-loop simulations. The results show that the proposed control scheme is effective in preventing acidification under high organic loading conditions. This work aims to provide a reproducible and accessible modeling framework to support educational purposes, collaborative development, and future exploration of advanced control strategies for anaerobic digestion processes.

1 Introduction

Anaerobic Digesters (ADs) has been one of the most prominent technologies for sewage treatment on the last decades [1, 2]. Among its advantages, it can be cited that is widely used for high concentration of organic matter as pollutant, expressed as Chemical Oxygen Demand (COD). Moreover, ADs produce fuel as biogas, with methane as one of the principal compounds. Nevertheless, since the beginning of the exploitation of this bioresource, operability challenges arose. To cope with them, several modeling efforts have been done.

Pioneering these developments, the Graef and Andrews (GA) model can be cited [3]. This was proposed in the early seventies to deal with the problem of acidification. Despite, nowadays there exist models more accurate and sophisticated, such as ADM1 [4], GA model is relatively simple and ideal for those who want to have an initial approximation, either for modeling this process or for modeling and simulation of processes in general. Simulation provides an additional incentive to revisit the GA model, as this approach remains a useful framework for studying this process [5].

The aim of this work is to reproduce in Simulink the set of simulations of the GA model as was presented in the book by Bailey and Ollis [6]. These reproductions are carried out with the greatest possible fidelity and are intended to be published in a GitHub repository, in order to stimulate collaborative work to explore or inspire new control strategies, and to offer a comprehensive framework for those who are beginning in this field as well.

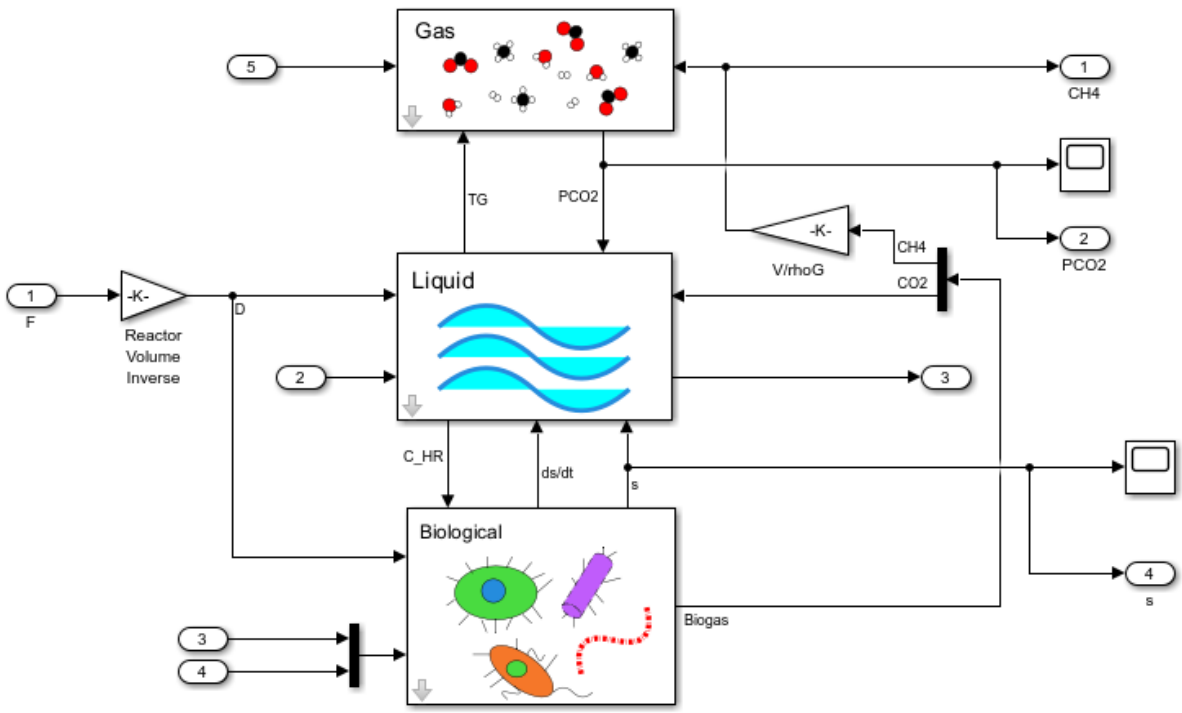

Figure 1: Simulink Subsystem for Anaerobic Digester showing the three phases; biological, liquid and gas.

2 Theoretical Framework

GA model distinguish three subdomains for the ADs (Fig. 1). The biological phase, where microorganisms transform complex organic matter into simpler molecules, while biogas is also produced, the liquid phase where chemical ionic reactions affect the pH of the media, and the gas phase in interaction with the liquid phase. As follows the dynamics for this phases will be described.

2.1 Biological Phase

The core of the process is the biological activity. The chemical organic compounds act as substrate given simpler organic molecules (M) and biogas with carbon dioxide and methane as major compounds.

$$\text{substrate} \xrightarrow{\text{Biomass}} +\text{M} + \text{CO}_2(\text{d}) + \text{CH}_4(\text{g}) \tag{1}$$

The limiting substrate for this reaction is presumed to be the noninoized volatile fatty acids (VFAs), with the general molecule $\text{H} - \text{R}$, or simply HR, being R the functional group, such as, acetic, propionic, etc.

The kinematics for biochemical reaction (1) has Haldane kinetics, i.e.,

$$\mu = \frac{\mu_{\max}}{1 + K_S/C_{\text{HR}} + C_{\text{HR}}/K_i} \tag{2}$$

being μ the specific growth rate in day^{-1}, C_{HR} the noninoized VFAs molar concentration, eq. (13), and $\mu_{\max}$, K_S and K_i as the kinetic parameters in consistent units.

The transient mass balance for this phase is

$$
\text{(Bio)} \begin{cases} \dfrac{\mathrm{d}\,x}{\mathrm{d}\,t} = \mu x + D(x_{in} - x) & x(0) = x_0 \\ \\ \dfrac{\mathrm{d}\,s}{\mathrm{d}\,t} = -\dfrac{\mu}{Y_{x/s}} x + D(s_{in} - s) & s(0) = s_0 \end{cases} \tag{3}
$$

being x the biomass concentration in molarity equivalent, s as substrate concentration, $D = F/V$ the dilution rate, given the volumetric flow F and reactor volume V. Coefficients Y express the yields and in subscripts the inflow concentrations.

Matrix form of (3) is

$$
\begin{bmatrix} \mathrm{d}\,x/\,\mathrm{d}\,t \\ \mathrm{d}\,s/\,\mathrm{d}\,t \end{bmatrix} = \mu \begin{bmatrix} 1 & 0 \\ -1/Y_{x/s} & 0 \end{bmatrix} \begin{bmatrix} x \\ s \end{bmatrix} + D \begin{bmatrix} x_{in} - x \\ s_{in} - s \end{bmatrix} \quad \mathbf{b}_0 = \begin{bmatrix} x_0 \\ s_0 \end{bmatrix} \tag{4}
$$

2.1.1 Biogas production

Methane solubility is negligible, not like this for CO_2. Thus

$$
\begin{cases} R_B = Y_{CO_2/x} \mu x \\ \\ Q_{CH_4} = \dfrac{V}{\rho_g} Y_{CH_4/x} \mu x \end{cases} \tag{5}
$$

being ρ_G the molar density of the gas at operational temperature.

2.2 Liquid Phase

The protagonist in the liquid phase is the dissolved carbon dioxide dynamics expressed as follows;

$$
\frac{\mathrm{d}\,C_{CO_2,d}}{\mathrm{d}\,t} = D(C_{CO_2,d,in} - C_{CO_2,d}) + R_C + R_B - T_G \quad C_{CO_2,d}(0) = C_{CO_2,d0} \tag{6}
$$

where R_B is the rate of addition of CO_2 from microorganism activity (5), T_G is the release to the gas phase and R_C is the rate of ion bicarbonate transforming to dissolved CO_2. Both T_G and R_C will be explained with more details as follows.

2.2.1 Gas-liquid transfer

The rate of mass transfer of CO_2 from the bulk of the liquid to the gas-liquid interphases is given by

$$
T_G = k_L a (C_{CO_2,d} - C^*_{CO_2}) \tag{7}
$$

where $C_{CO_2,d}$ is the concentration of dissolved CO_2 in the bulk and $C^*_{CO_2}$ is the corresponding concentration in the gas-liquid interphase. From Henry's law

$$
C^*_{CO_2} = K_H P_{CO_2} \tag{8}
$$

where P_{CO_2} is the partial pressure of CO_2 in the gas phase.

2.2.2 Ionic equilibrium

Dissolved CO_2 is in ionic equilibrium with ion bicarbonate in aqueous media, i.e.,

$$CO_2(\mathrm{d}) + H_2O(\mathrm{l}) \rightleftharpoons +HCO_3^-(\mathrm{d}) + H^+(\mathrm{d}) \tag{9}$$

for this ionic equilibrium, the constant is

$$K_1 = \frac{C_{H^+} C_{HCO_3^-}}{C_{CO_2,d}} \tag{10}$$

The concentration of ion hydrogen affects the ionization of VFAs. The concentration of noninoized VFAs differs in general from the total concentration of substrate s due to the ionization reaction

$$H - R \rightleftharpoons R^- + H^+ \tag{11}$$

By mass actions law

$$K_a = \frac{C_{H^+} C_{R^-}}{C_{HR}} \tag{12}$$

The considered $\mathrm{p}\,K_a = 4.5$ gathers the general ionic equilibrium of VFAs.

Digesters operate at p H's above 6, and it is known that almost all the acid is in the ionized form, so that $s \approx C_{R^-}$ and

$$C_{HR} \approx \frac{s C_{H^+}}{K_a} \tag{13}$$

remembering that $C_{HR} = hs$.

Ion bicarbonate has its own dynamics, i.e.,

$$\frac{\mathrm{d}\,C_{HCO_3^-}}{\mathrm{d}\,t} = D(C_{HCO_3^-,in} - C_{HCO_3^-}) - R_C \tag{14}$$

An independent expression for the derivative of (14) can be obtained by electroneutrality, i.e.,

$$c + C_{H^+} = a + C_{HCO_3^-} + 2C_{CO_3^{2-}} + C_{OH^-} + C_{R^-} \tag{15}$$

where c is the total cation concentration, including contributions of calcium, sodium, magnesium and ammonium, and a is the total anion (chlorides, phosphates, sulfide, etc.) concentration. For a digester operating in the normal p H range of 6 to 8, concentrations of hydrogen ions, hydroxide and carbonate are negligible, hence

$$c - a = C_{HCO_3^-} + s \tag{16}$$

Defining the *net cation concentration* as

$$z \equiv c - a \tag{17}$$

then

$$C_{HCO_3^-} = z - s \tag{18}$$

Differentiating

$$\frac{\mathrm{d}\,C_{HCO_3^-}}{\mathrm{d}\,t} = \frac{\mathrm{d}\,z}{\mathrm{d}\,t} - \frac{\mathrm{d}\,s}{\mathrm{d}\,t} \tag{19}$$

replacing in (14) yields

$$R_C = D(C_{HCO_3^-,in} - C_{HCO_3^-}) + \frac{\mathrm{d}\,s}{\mathrm{d}\,t} - \frac{\mathrm{d}\,z}{\mathrm{d}\,t} \tag{20}$$

The dynamic for z is only of input and output, not generation or consumption, then

$$\frac{\mathrm{d}\,z}{\mathrm{d}\,t} = D(z_{in} - z) \quad z(0) = z_0 \tag{21}$$

2.3 Gas Phase

A material balance must also be made on the carbon dioxide in the gas phase to calculate the partial pressure of carbon dioxide in Henry's Law (8). Obeying the general statement of Accumulation = Input - Output + Reaction, then we have

$$\frac{\mathrm{d}\, C_{\mathrm{CO_2},G}}{\mathrm{d}\, t} = \frac{V}{V_G} T_G - \frac{Q}{V_G} C_{\mathrm{CO_2},G} + 0 \tag{22}$$

Additional variables and parameters are: V_G the reactor gas volume and Q as the total dry gas flow rate, i.e.

$$Q = Q_{\mathrm{CH_4}} + Q_{\mathrm{CO_2}} + Q_R \tag{23}$$

being Q_R a inert gas flow pumped into the gas phase for control purposes (see §4).

Methane flow rate $Q_{\mathrm{CH_4}}$ came from (5), meanwhile

$$Q_{\mathrm{CO_2}} = \frac{V}{\rho_G} T_G \tag{24}$$

Molar concentration of carbon dioxide can be converted to pressure as follows

$$C_{\mathrm{CO_2,G}} = \frac{\rho_G}{P} P_{\mathrm{CO_2}} \tag{25}$$

Substituting (25) in (22)

$$\frac{\mathrm{d}\, P_{\mathrm{CO_2}}}{\mathrm{d}\, t} = \frac{PV}{\rho_G V_G} T_G - \frac{Q}{V_G} P_{\mathrm{CO_2}} \tag{26}$$

3 Open Loop Simulations

Fig. 2 shows open loop simulations for step of substrate concentration. It can be observed that, for jumps from 24 to 36.3 g L^{-1}, the AD is able to auto-stabilize. However, at 40.0 g L^{-1}, the digester is unable to cope with acidification, with pH falling beyond acceptable limits by the second day.

Fig. 3 shows open loop simulations for step for the volumetric flow rate of the influent. It can be observed that, for jumps from 2 to 2.7 L day^{-1}, the AD is able to auto-stabilize. However, at 3 L day^{-1}, the digester is unable to cope with acidification, with pH falling beyond acceptable limits after the fourth day.

4 Control system and close loop simulations

Graef and Andrews proposed a control system based on p H monitoring (Fig. 4). When the p H falls below acceptable limits, a pair of relays are activated to inject inert gas into the digester. Each relay has its own p H activation threshold and its own assigned volumetric flow rate, Q_{R1} and Q_{R2}. Both streams are added, i.e.,

$$Q_R = Q_{R1} + Q_{R2} \tag{27}$$

being Q_R of (23). The inert gas may consist of the same biogas after passing through a scrubber to remove CO_2 prior to being recirculated into the digester.

Fig. 2 shows open simulations for step of substrate concentration for both 27 and 40 g L^{-1}, this last one with and without control. It can be seen that without the control, the p H falls down, but with the control activated, the p H is stabilized.

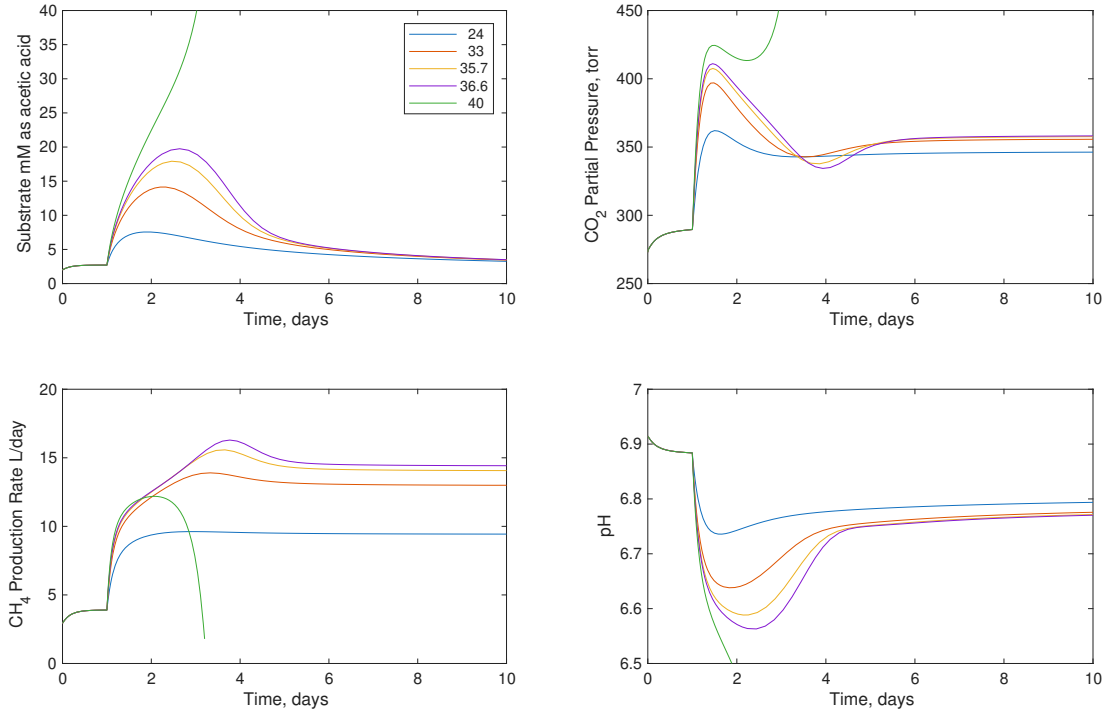

Figure 2: Reproduction for open loop simulation with a set of steps for substrate concentration in the influent, from 24 to 40 g L^{-1}.

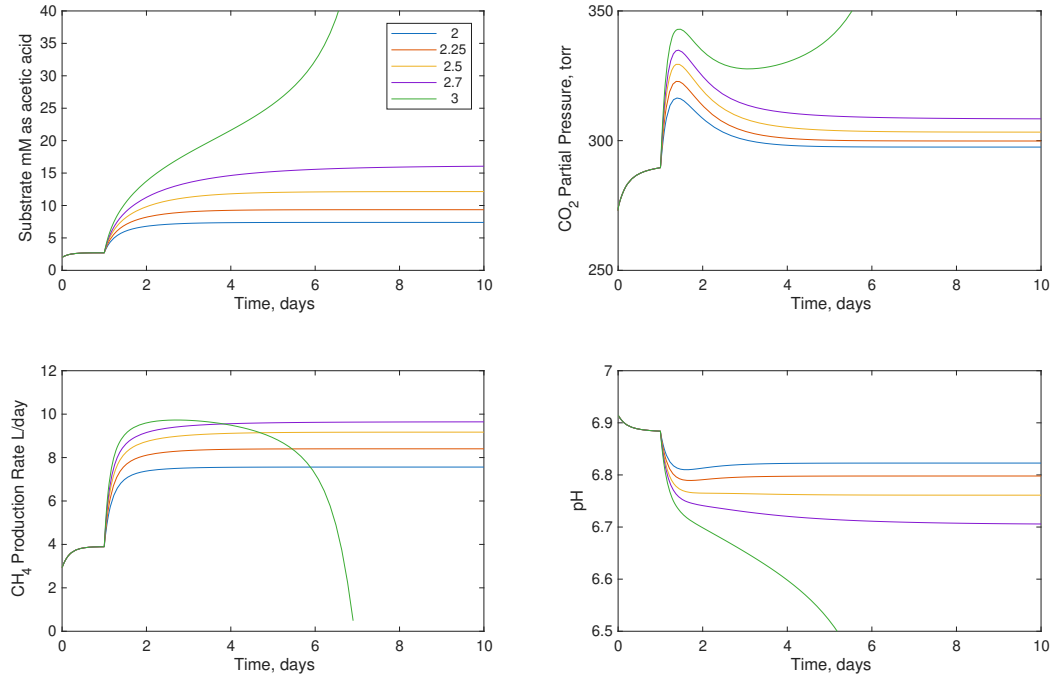

Figure 3: Reproduction for open loop simulation with a set of steps for the volumetric flow rate of the influent, from 2 to 3 L day^{-1}.

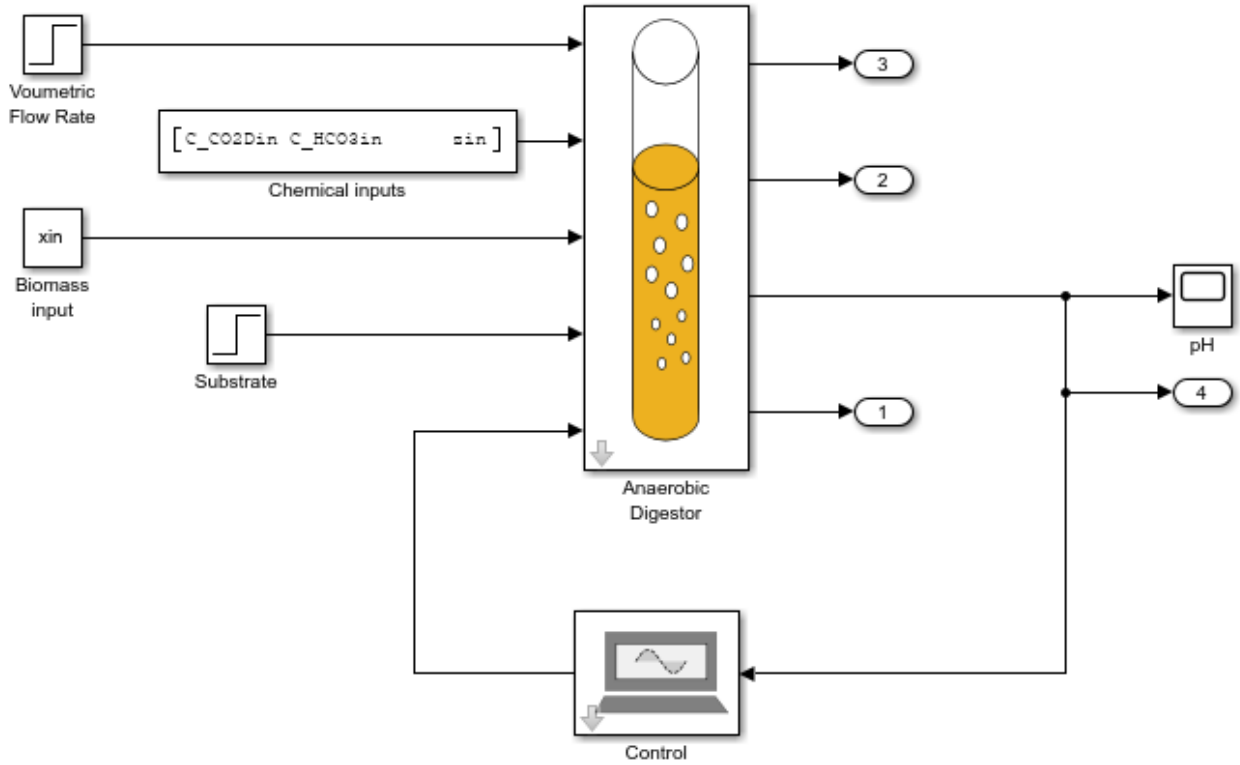

Figure 4: Simulink Model for Anaerobic Digester with control system integrated.

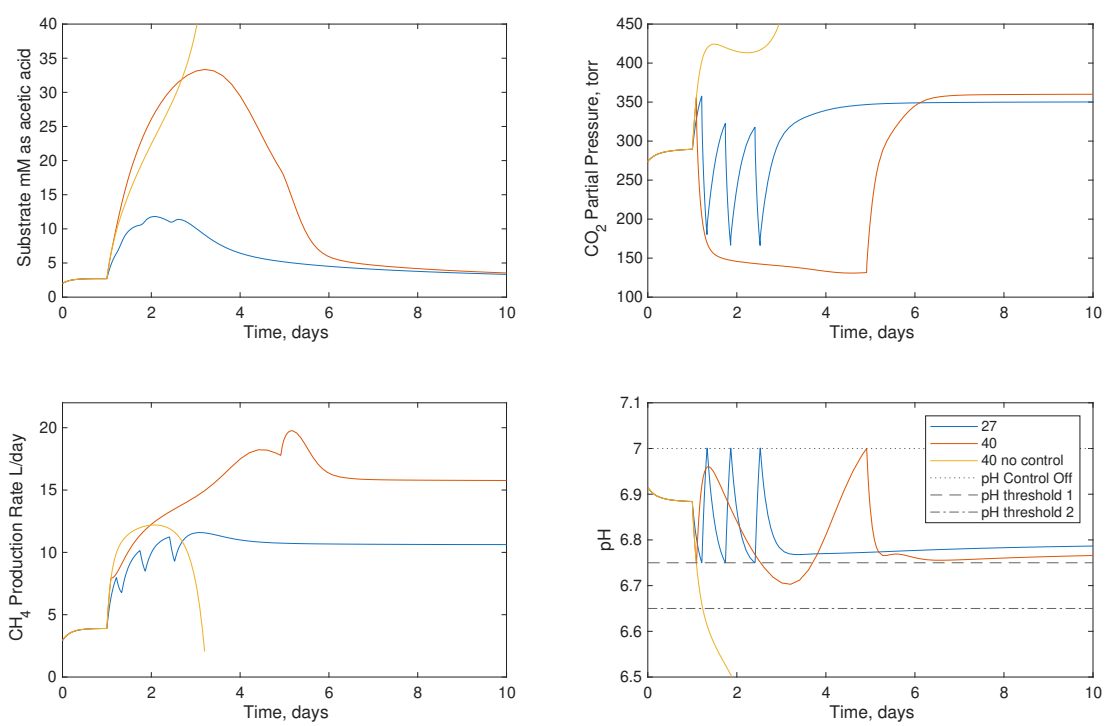

Figure 5: Reproduction for both open and close loop simulation with a set of steps for substrate concentration in the influent, 27 and 40 g L^{-1}. This last jump with and without control.

5 Conclusions and Future Work

In this work, the model of Graef and Andrews was reproduced. Small differences with respect to the original results were observed [3, 6]. These slight discrepancies may be attributed to advances in simulation resources, including both hardware and software. Nevertheless, the essential behavior of the model remains unchanged.

As future work several improvements may be achieved. Some proposals included:

1. Change relays to better control schemes, such as PID controllers.
2. Improve model to allow dynamical changes of the parameters using MATLAB resources such as sliders, check box, buttons, etc.
3. Create a model version in Simbiology. Perhaps, this will be a whole independent version for this initial seed.

References

[1] Frank N. Kemmer and John McCallion. *Nalco Manual del Agua*. Vol. 2. México, D.F.: McGraw-Hill, 1989.

[2] W. Wesley Eckenfelder Jr. *Industrial Water Pollution Control*. 2nd ed. Civil Engineering Series. Singapore: McGraw-Hill, 1989.

[3] J. F. Andrews and Stephen P. Graef. "Dynamic Modeling and Simulation of the Anaerobic Digestion Process". In: *Anaerobic Biological Treatment Processes*. Ed. by Frederick G. Pohland. Vol. 105. Advances in Chemistry. American Chemical Society, 1971. Chap. 8, pp. 126–162. DOI: 10.1021/ba-1971-0105.ch008.

[4] D.J. Batstone et al. "The IWA Anaerobic Digestion Model No 1 (ADM1)". In: *Water Science and Technology* 45.10 (2002), pp. 65–73. DOI: 10.2166/wst.2002.0292.

[5] Prabakaran Ganeshan and Karthik Rajendran. "Dynamic simulation and optimization of anaerobic digestion processes using MATLAB". In: *Bioresource Technology* 351 (2022), p. 126970. DOI: 10.1016/j.biortech.2022.126970.

[6] James E. Bailey and David F. Ollis. *Biochemical Engineering Fundamentals*. 2nd ed. Chemical Engineering Series. Singapore: McGraw-Hill, 1986.

Este documento ha sido desarrollado en LaTeX Overleaf