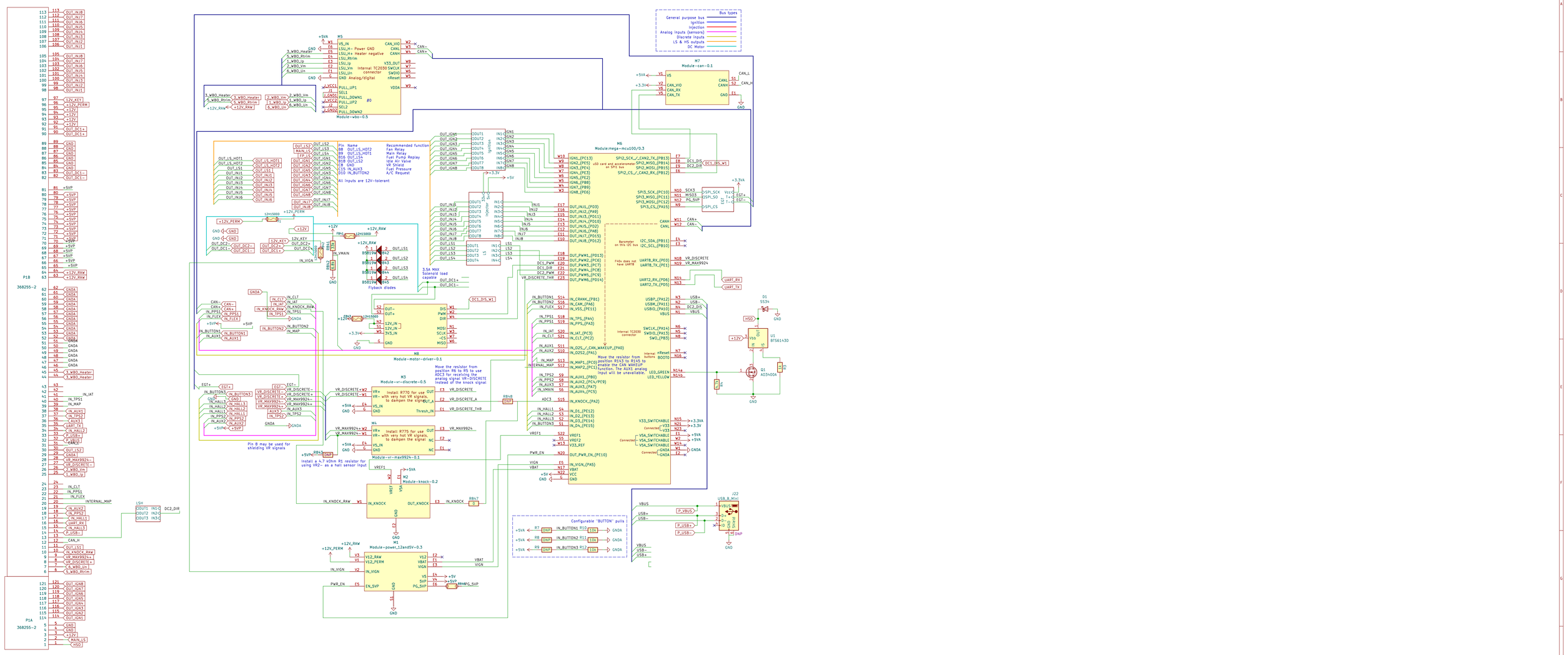
Bus types
General purpose bus
Ignition
Injection
Analog inputs (sensors)
Discrete inputs
LS & HS outputs
DC Motor
M5
Module-wbo-0.5
M7
Module-can-0.1
M6
Module=mega-mcu100/0.3
M8
Module-motor-driver-0.1
M3
Module-vr-discrete-0.5
M4
Module-vr-max9924-0.1
M2
Module-knock-0.2
M1
Module-power_12and5V-0.3
Pin Name Recommended function
B8 OUT_LS_HOT2 Fan Relay
B9 OUT_LS_HOT1 Main Relay
B16 OUT_LS4 Fuel Pump Replay
B18 OUT_LS2 Idle Air Valve
C8 GND VR Shield
C15 IN_AUX3 Fuel Pressure
D10 IN_BUTTON2 A/C Request
All inputs are 12V-tolerant
Flyback diodes
3.5A MAX Solenoid load capable
Move the resistor from position R6 to R5 to use ADC3 for receiving the analog signal of DISCRETE instead of the knock signal
Move the resistor from position R43 to R145 to enable the CAN WAKEUP function. The AUX1 analog input will be unavailable.
Install R770 for use with very hot VR signals, to dampen the signal
Install R775 for use with very hot VR signals, to dampen the signal
Install a 4.7 kOhm R1 resistor for using VR2- as a hall sensor input
Pin 8 may be used for shielding VR signals
Configurable "BUTTON" pulls
SD card and accelerometer on SPI1 bus
Barometer on this I2C bus
FiOx does not have UART8
Internal TC2030 connector
Internal buttons
Connector
P1B
368255-2
P1A
368255-2
LSH
DC2_DIR
USB_B_Mini
J22
D1
SS34
U1
BTS6143D
Q1
AO3400A
R43
4k7
R145
DNP
R847
0
R7
R8
R9
10k
GND
GNDA
+12V
+5VA
+3.3VA
+12V_RAW
+12V_PERM
VBAT
VIGN
IN_VIGN
PWR_EN
VBUS
USB+
USB-
P_VBUS
P_USB+
P_USB-
CAN_L
CAN_H
CAN+
CAN-
HSO
UART_RX
UART_TX
andreika @ rusEFI.comm
Sheet: /
File: greenenergyecu.kicad_sch
Title: Hellen121vag
Size: A1
Date: 2022-10-14
Rev: d
KiCad E.D.A. 8.0.9
Id: 1/6

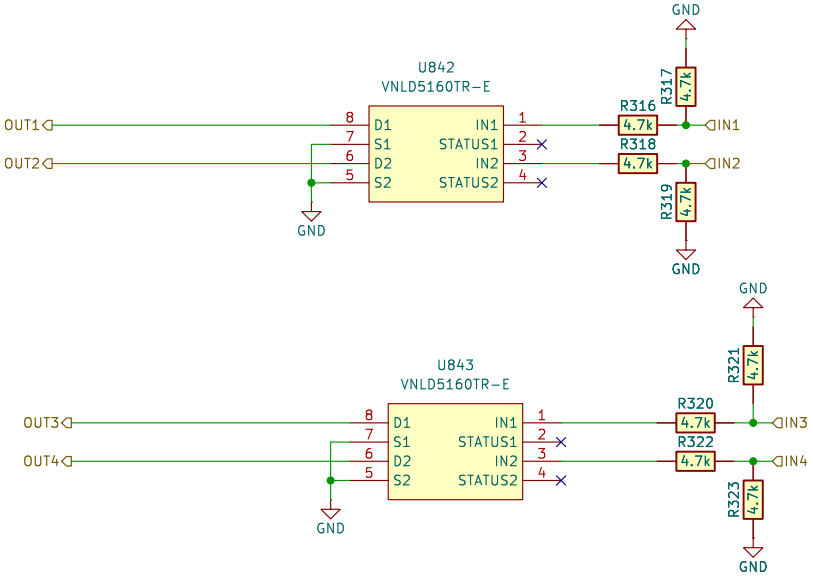

Sheet: /LS/
File: LS4.kicad_sch

Title:

Size: A4	Date:	Rev:
KiCad E.D.A. 8.0.9		Id: 3/6

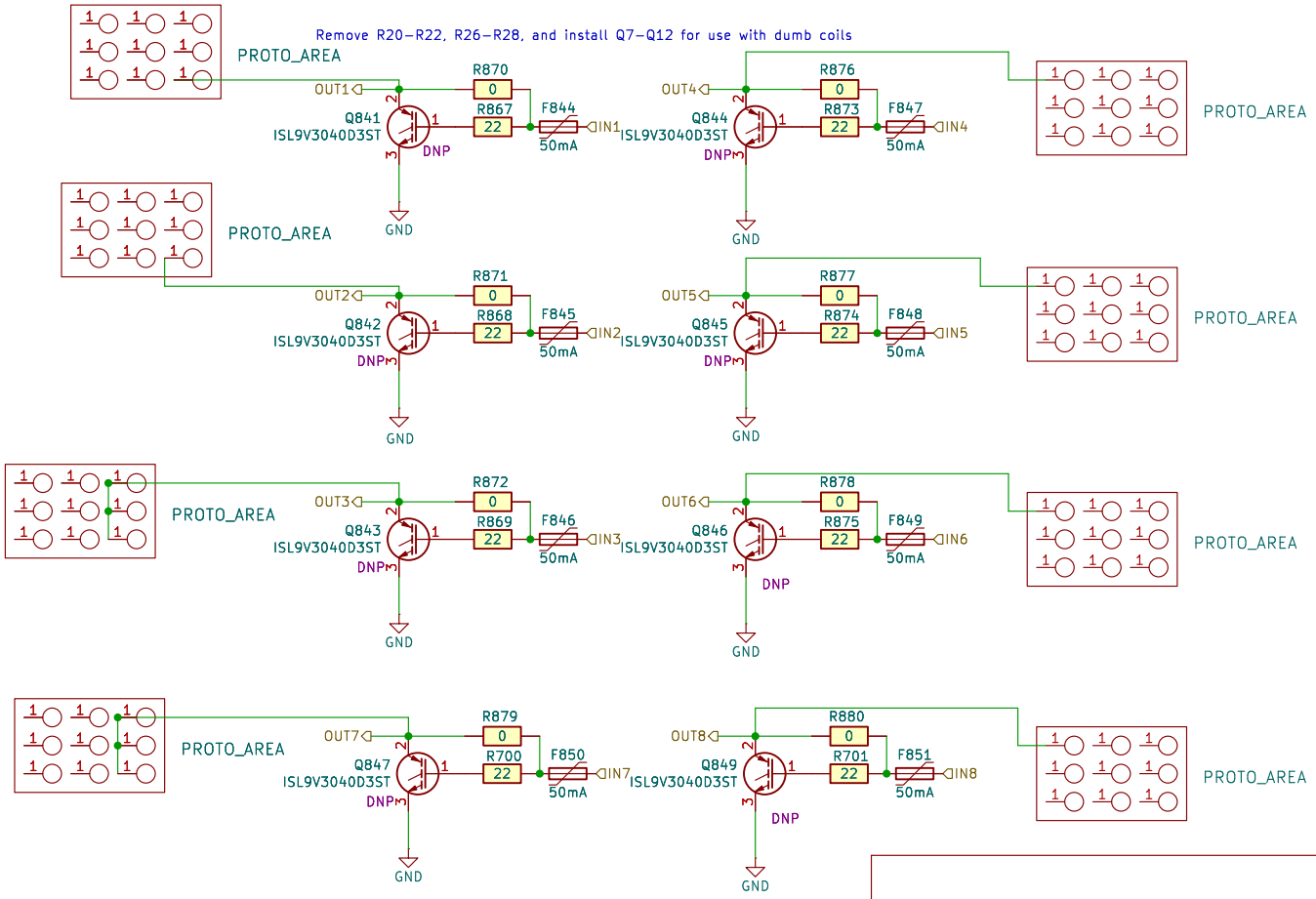

Sheet: /Ignition/
File: IGN6.kicad_sch

Title:

Size: A4	Date:	**Rev:**
KiCad E.D.A. 8.0.9		Id: 5/6

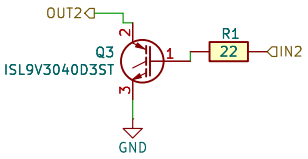

Sheet: /LSH/
File: LS_H.kicad_sch

Title:

Size: A4	Date:	**Rev:**
KiCad E.D.A. 8.0.9		Id: 6/6

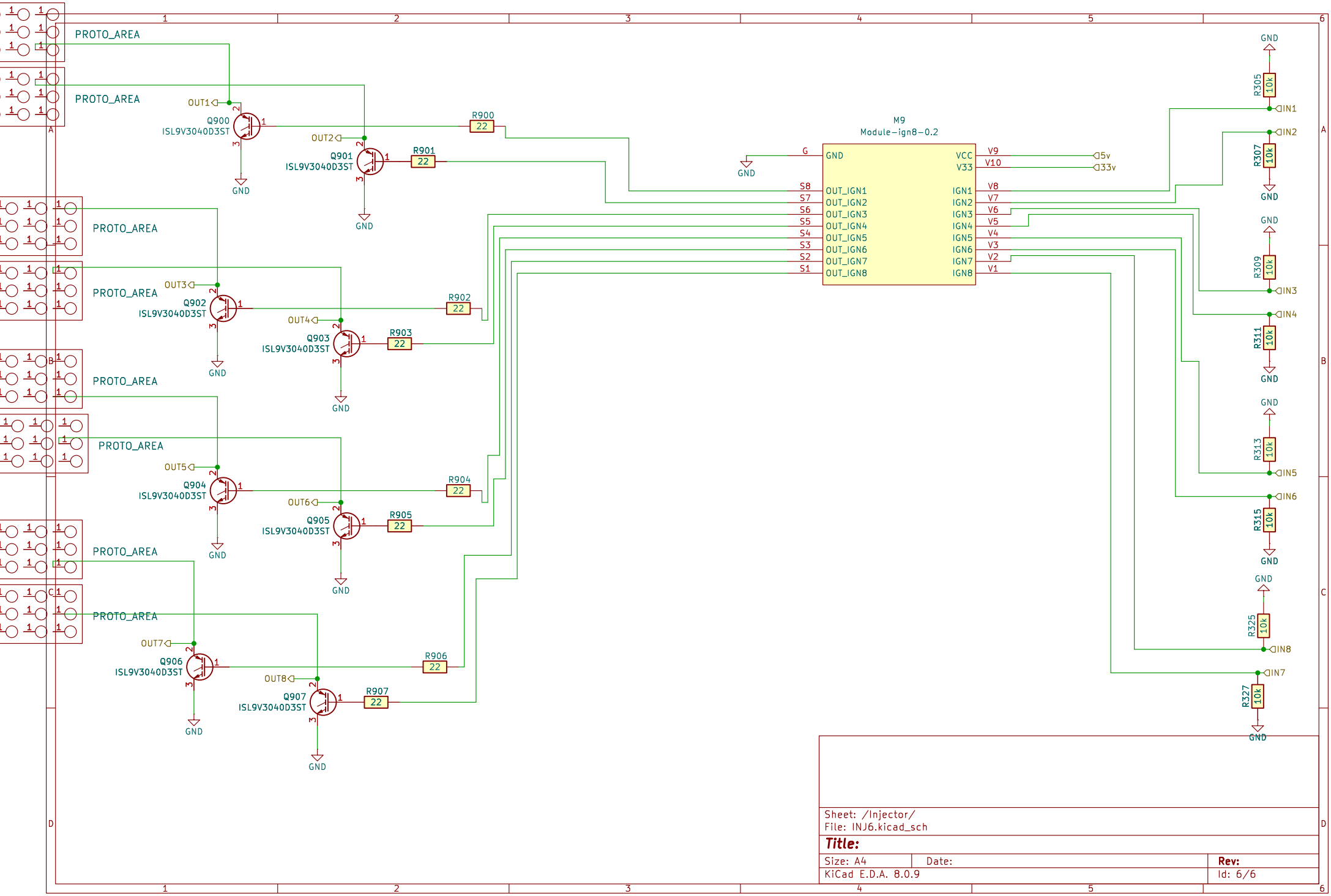

Sheet: /Injector/
File: INJ6.kicad_sch

Title:

Size: A4	Date:	**Rev:**
KiCad E.D.A. 8.0.9		Id: 6/6

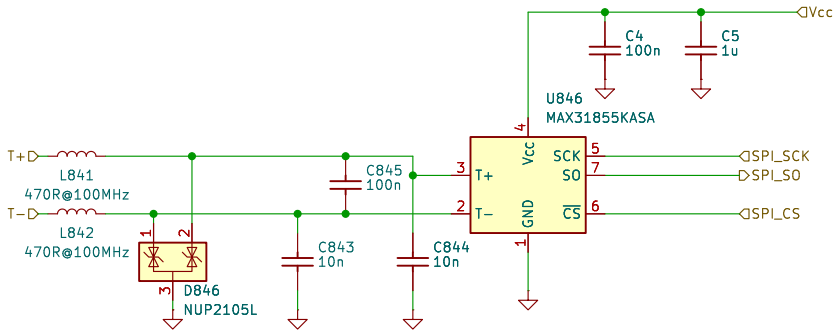

NUP2105L is optional, used for protection

Sheet: /EGT/
File: egt.kicad_sch

Title:

Size: A4	Date:	**Rev:**
KiCad E.D.A. 8.0.9		Id: 9/6

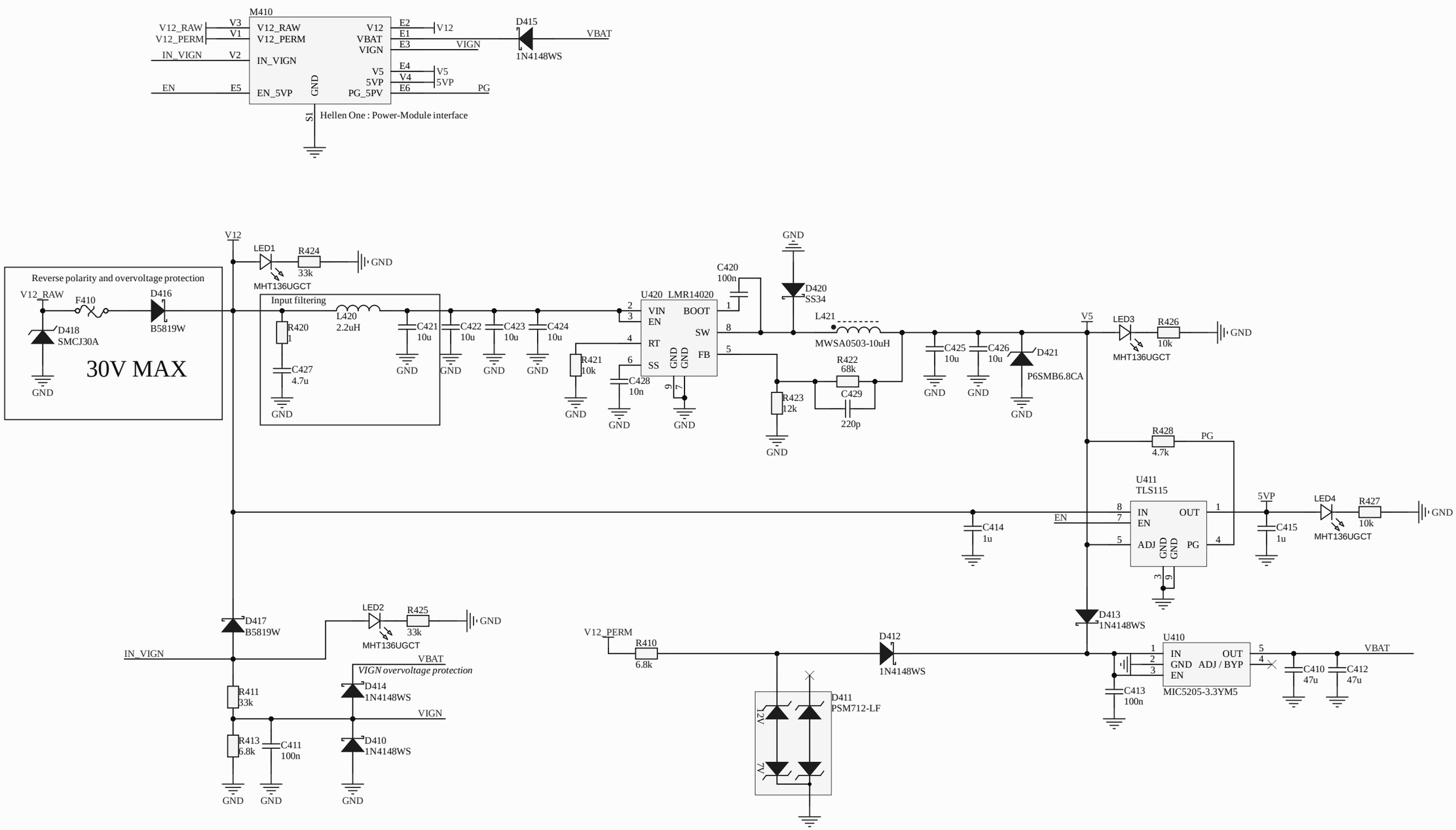

power_12and5V-0.3

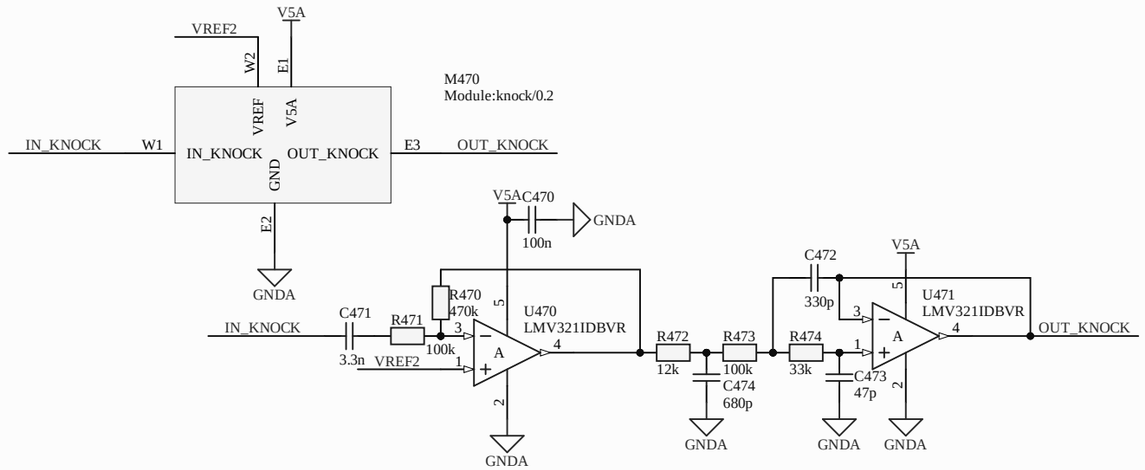

Title: ***Hellen-One Knock***			***rusEFI EMS*** ***Hellen-One Platform*** *https://rusefi.com/s/hellen72*
Size: A3	Author: andreika	Revision: 0.2	
Date: 15.02.2023		Sheet 1 of 1	

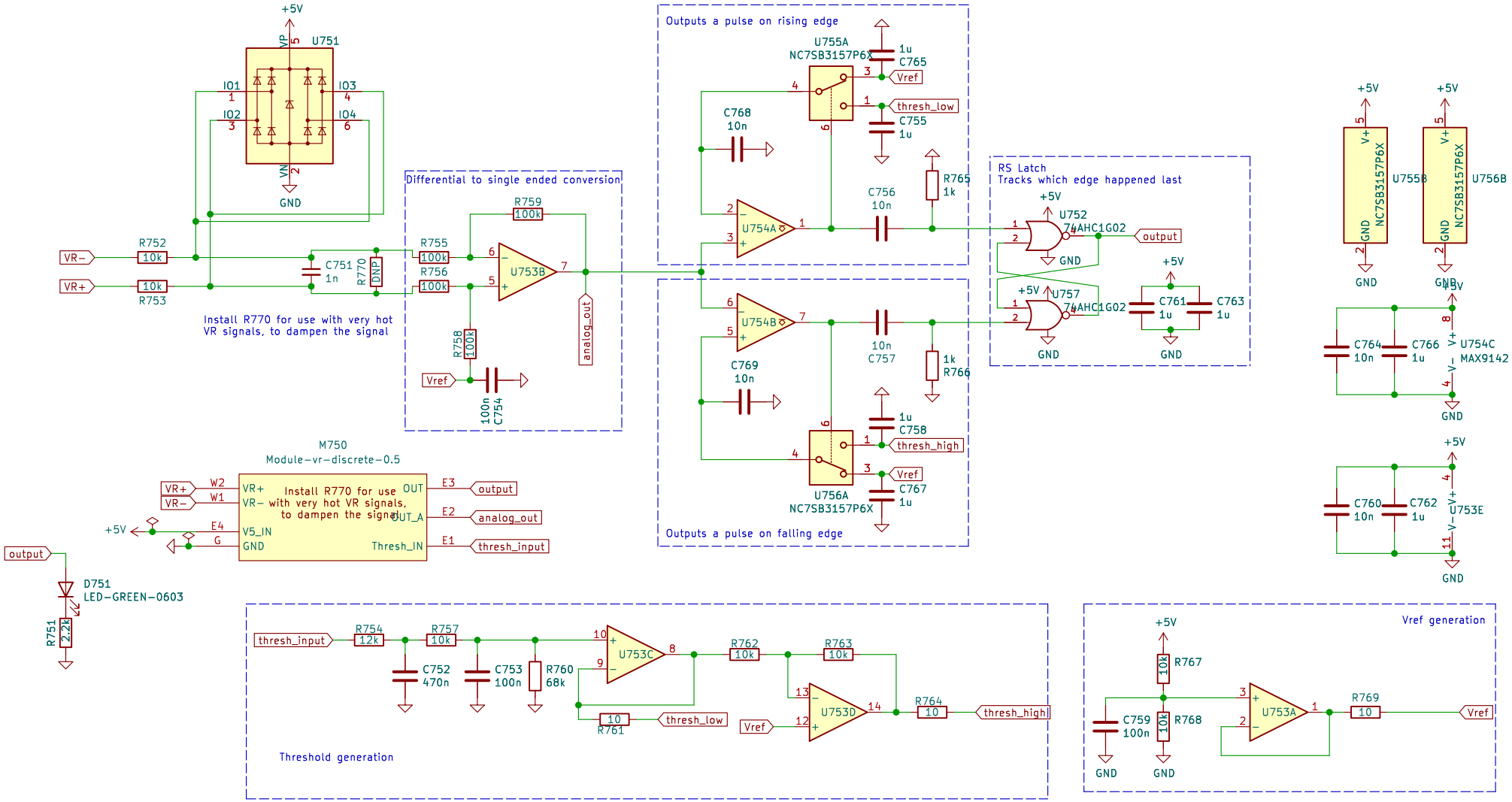

Sheet: /
File: hellen1−vr−discrete.kicad_sch

Title:

Size: A4	Date:	Rev:
KiCad E.D.A. kicad 7.0.9		Id: 1/1

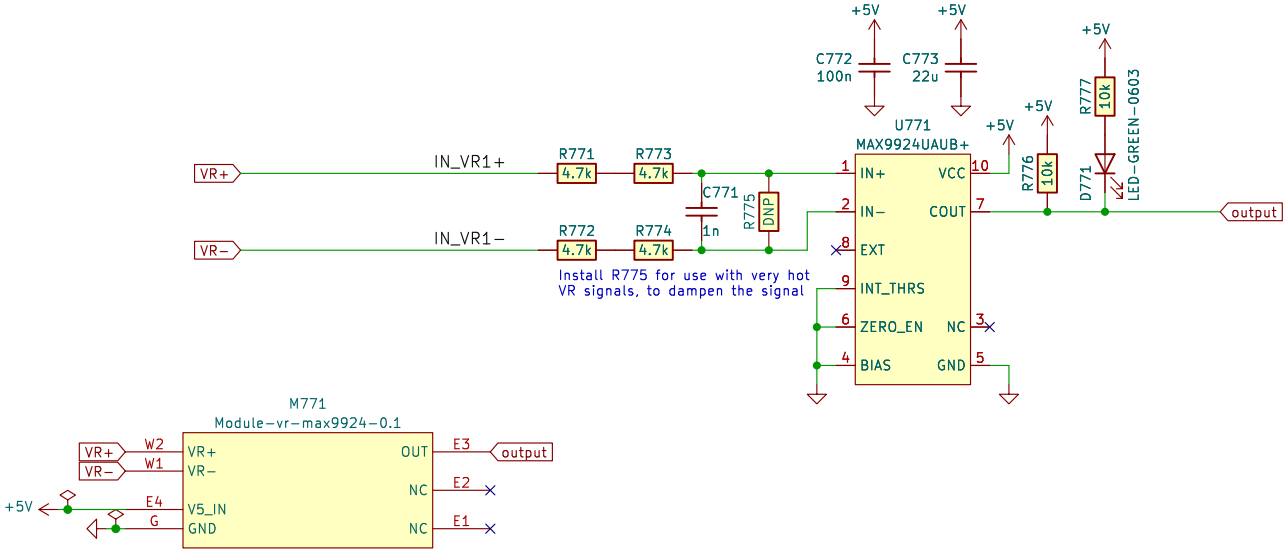

Sheet: /
File: hellen1−vr−max9924.kicad_sch

Title: VR MAX9924 module

Size: A4	Date: 2023−07−25	Rev: 0.1
KiCad E.D.A. eeschema 7.0.9		Id: 1/1

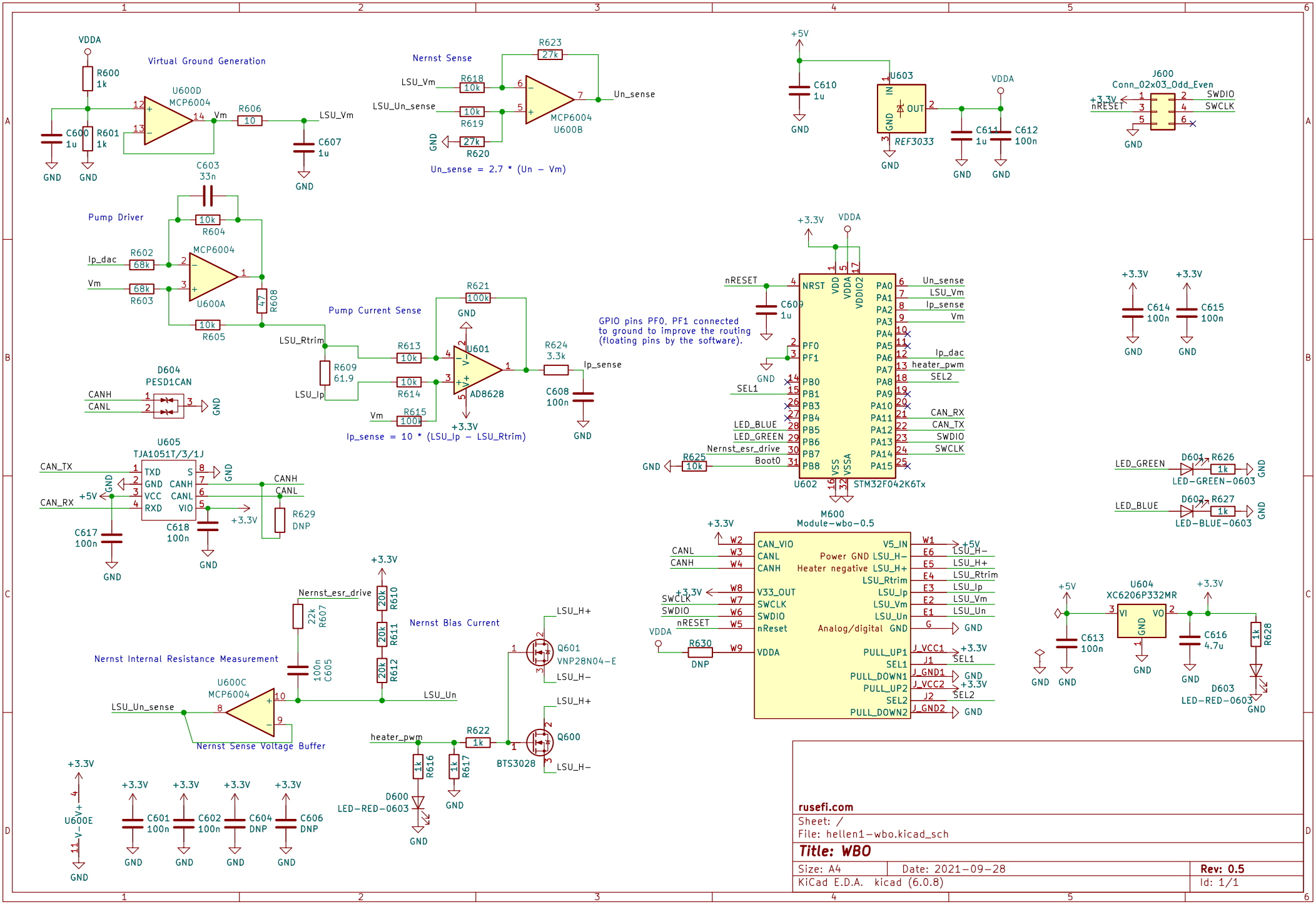
Virtual Ground Generation
U600D
MCP6004
VDDA
R600
1k
R601
1k
C600
1u
GND
Vm
R606
10
LSU_Vm
C607
1u
Nernst Sense
R623
27k
R618
10k
LSU_Vm
LSU_Un_sense
R619
10k
R620
27k
MCP6004
U600B
Un_sense
Un_sense = 2.7 * (Un − Vm)
+5V
C610
1u
U603
REF3033
VDDA
C611
1u
C612
100n
J600
Conn_02x03_Odd_Even
+3.3V
nRESET
SWDIO
SWCLK
C603
33n
Pump Driver
R604
10k
Ip_dac
R602
68k
Vm
R603
68k
MCP6004
U600A
R608
47
R605
10k
Pump Current Sense
LSU_Rtrim
R609
61.9
LSU_Ip
R613
10k
R614
10k
R615
100k
R621
100k
U601
AD8628
R624
3.3k
Ip_sense
C608
100n
Ip_sense = 10 * (LSU_Ip − LSU_Rtrim)
D604
PESD1CAN
CANH
CANL
U605
TJA1051T/3/1J
TXD
GND
VCC
RXD
S
CANH
CANL
VIO
CAN_TX
CAN_RX
C617
100n
C618
100n
R629
DNP
+3.3V
Nernst Internal Resistance Measurement
Nernst_esr_drive
22k
R607
100n
C605
R610
20k
R611
20k
R612
20k
Nernst Bias Current
LSU_Un
U600C
MCP6004
LSU_Un_sense
Nernst Sense Voltage Buffer
Q601
VNP28N04-E
LSU_H+
LSU_H−
Q600
BTS3028
heater_pwm
R622
1k
R616
1k
R617
1k
D600
LED-RED-0603
U600E
C601
100n
C602
100n
C604
DNP
C606
DNP
GPIO pins PF0, PF1 connected
to ground to improve the routing
(floating pins by the software).
U602
STM32F042K6Tx
NRST
VDD
VDDA
VDDIO2
PA0
PA1
PA2
PA3
PA4
PA5
PA6
PA7
PA8
PA9
PA10
PA11
PA12
PA13
PA14
PA15
PF0
PF1
PB0
PB1
PB3
PB4
PB5
PB6
PB7
PB8
VSS
VSSA
Un_sense
LSU_Vm
Ip_sense
Vm
Ip_dac
heater_pwm
SEL2
CAN_RX
CAN_TX
SWDIO
SWCLK
C609
1u
SEL1
LED_BLUE
LED_GREEN
Nernst_esr_drive
Boot0
R625
10k
C614
100n
C615
100n
D601
R626
1k
LED-GREEN-0603
D602
R627
1k
LED-BLUE-0603
M600
Module-wbo-0.5
CAN_VIO
CANL
CANH
V33_OUT
SWCLK
SWDIO
nReset
VDDA
V5_IN
Power GND
Heater negative
LSU_H−
LSU_H+
LSU_Rtrim
LSU_Ip
LSU_Vm
LSU_Un
Analog/digital GND
PULL_UP1
SEL1
PULL_DOWN1
PULL_UP2
SEL2
PULL_DOWN2
J_VCC1
J1
J_GND1
J_VCC2
J2
J_GND2
R630
DNP
U604
XC6206P332MR
VI
VO
C613
100n
C616
4.7u
R628
1k
D603
LED-RED-0603
rusefi.com
Sheet: /
File: hellen1-wbo.kicad_sch
Title: WBO
Size: A4
Date: 2021-09-28
Rev: 0.5
KiCad E.D.A. kicad (6.0.8)
Id: 1/1

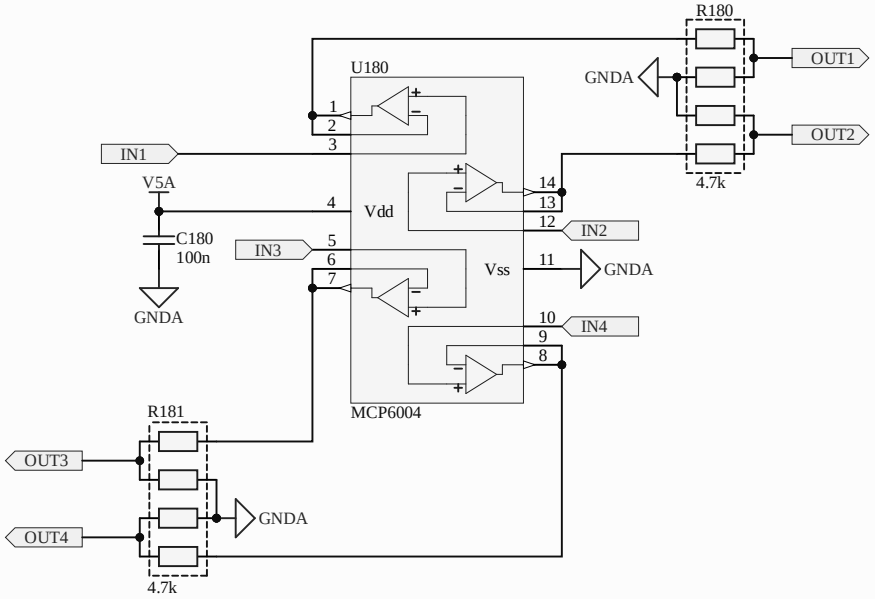
R180
U180
GNDA
OUT1
OUT2
IN1
V5A
4.7k
Vdd
C180
100n
IN3
IN2
Vss
GNDA
GNDA
IN4
MCP6004
R181
OUT3
GNDA
OUT4
4.7k

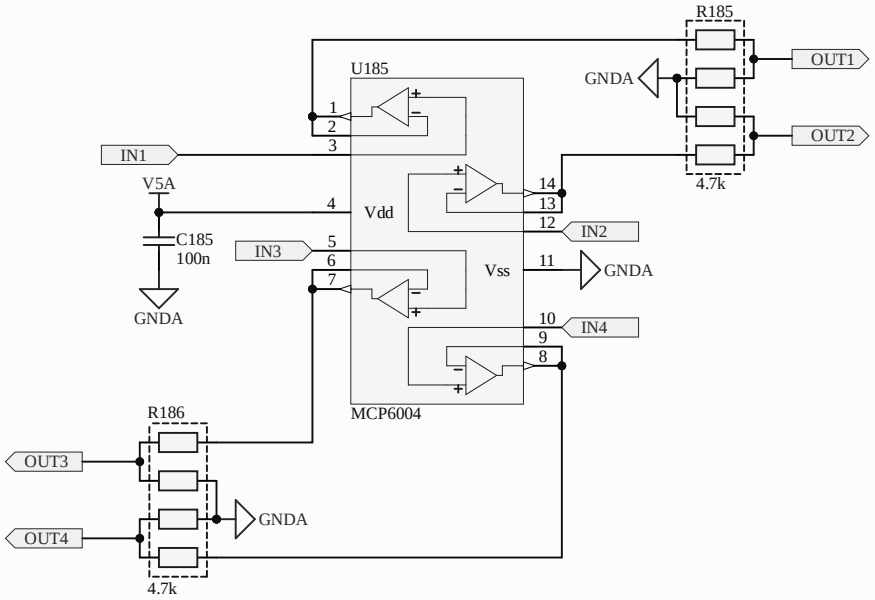
R185
U185
GNDA
OUT1
OUT2
IN1
V5A
4.7k
Vdd
C185
100n
IN3
IN2
Vss
GNDA
GNDA
IN4
MCP6004
R186
OUT3
GNDA
OUT4
4.7k

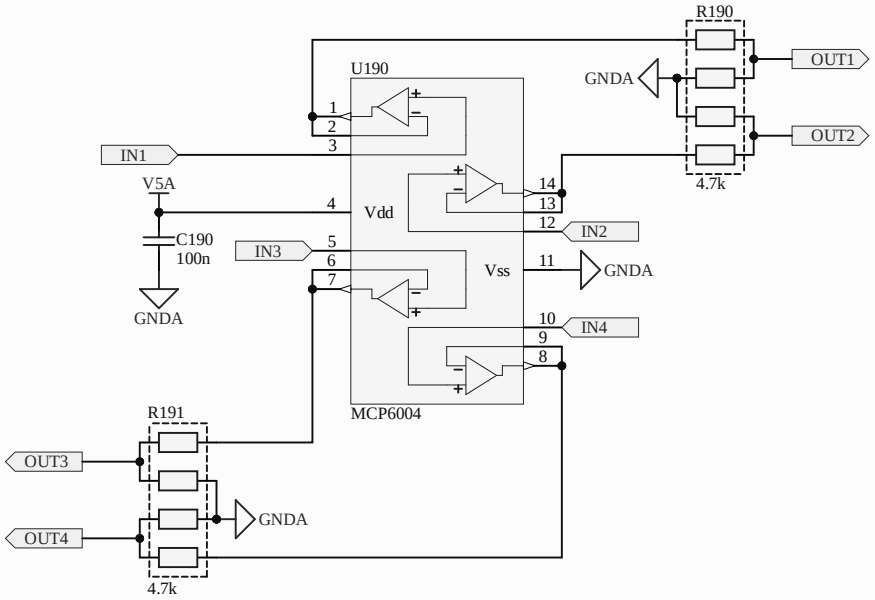
R190
U190
GNDA
OUT1
OUT2
IN1
V5A
C190
100n
GNDA
IN3
Vdd
Vss
IN2
GNDA
IN4
MCP6004
4.7k
R191
OUT3
OUT4
GNDA
4.7k

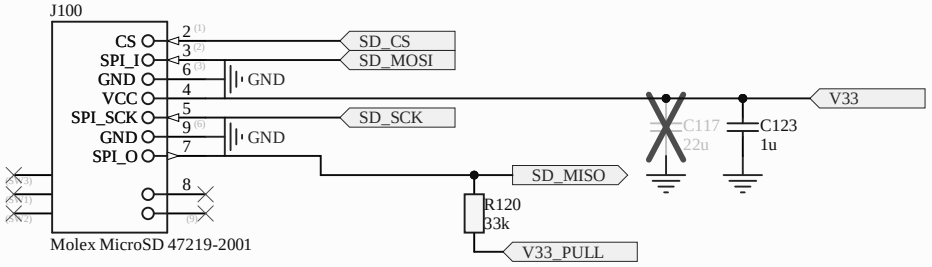
J100
CS
SPI_I
GND
VCC
SPI_SCK
GND
SPI_O
2
3
6
4
5
9
7
8
GND
GND
SD_CS
SD_MOSI
SD_SCK
SD_MISO
V33
C117
22u
C123
1u
R120
33k
V33_PULL
Molex MicroSD 47219-2001

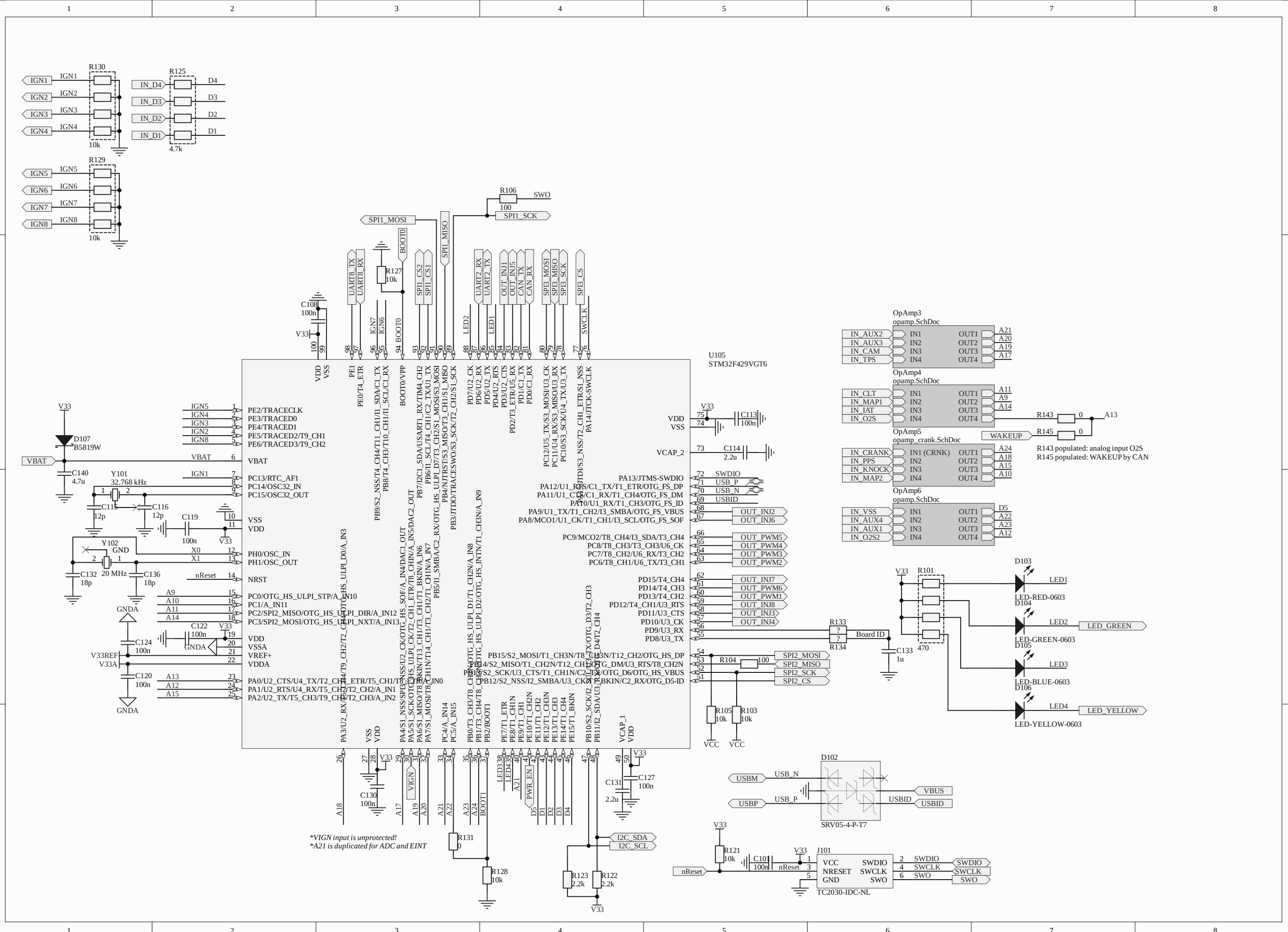
U105
STM32F429VGT6
R130
R125
R129
IGN1
IGN2
IGN3
IGN4
IGN5
IGN6
IGN7
IGN8
IN_D4
IN_D3
IN_D2
IN_D1
D4
D3
D2
D1
10k
4.7k
R106
SWO
100
SPI1_SCK
SPI1_MOSI
SPI1_MISO
BOOT0
R127
10k
C108
100n
V33
UART8_TX
UART8_RX
SPI1_CS2
SPI1_CS1
UART2_RX
UART2_TX
OUT_INJ1
OUT_INJ5
CAN_TX
CAN_RX
SPI3_MOSI
SPI3_MISO
SPI3_SCK
SPI3_CS
SWCLK
LED2
LED1
VDD
VSS
PE1
PE0/T4_ETR
BOOT0/VPP
PD7/U2_CK
PD6/U2_RX
PD5/U2_TX
PD4/U2_RTS
PD3/U2_CTS
PD2/T3_ETR/U5_RX
PD1/C1_TX
PD0/C1_RX
PA14/JTCK-SWCLK
PC12/U5_TX/S3_MOSI/U3_CK
PC11/U4_RX/S3_MISO/U3_RX
PC10/S3_SCK/U4_TX/U3_TX
PA13/JTMS-SWDIO
PA12/U1_RTS/C1_TX/T1_ETR/OTG_FS_DP
PA11/U1_CTS/C1_RX/T1_CH4/OTG_FS_DM
PA10/U1_RX/T1_CH3/OTG_FS_ID
PA9/U1_TX/T1_CH2/I3_SMBA/OTG_FS_VBUS
PA8/MCO1/U1_CK/T1_CH1/I3_SCL/OTG_FS_SOF
PC9/MCO2/T8_CH4/I3_SDA/T3_CH4
PC8/T8_CH3/T3_CH3/U6_CK
PC7/T8_CH2/U6_RX/T3_CH2
PC6/T8_CH1/U6_TX/T3_CH1
PD15/T4_CH4
PD14/T4_CH3
PD13/T4_CH2
PD12/T4_CH1/U3_RTS
PD11/U3_CTS
PD10/U3_CK
PD9/U3_RX
PD8/U3_TX
PB15/S2_MOSI/T1_CH3N/T8_CH3N/T12_CH2/OTG_HS_DP
PB14/S2_MISO/T1_CH2N/T12_CH1/OTG_DM/U3_RTS/T8_CH2N
PB13/S2_SCK/U3_CTS/T1_CH1N/C2_TX/OTG_D6/OTG_HS_VBUS
PB12/S2_NSS/I2_SMBA/U3_CK/T1_BKIN/C2_RX/OTG_D5-ID
PE2/TRACECLK
PE3/TRACED0
PE4/TRACED1
PE5/TRACED2/T9_CH1
PE6/TRACED3/T9_CH2
VBAT
PC13/RTC_AF1
PC14/OSC32_IN
PC15/OSC32_OUT
PH0/OSC_IN
PH1/OSC_OUT
NRST
PC0/OTG_HS_ULPI_STP/A_IN10
PC1/A_IN11
PC2/SPI2_MISO/OTG_HS_ULPI_DIR/A_IN12
PC3/SPI2_MOSI/OTG_HS_ULPI_NXT/A_IN13
VSSA
VREF+
VDDA
PA0/U2_CTS/U4_TX/T2_CH1_ETR/T5_CH1/T8_ETR/A_IN0
PA1/U2_RTS/U4_RX/T5_CH2/T2_CH2/A_IN1
PA2/U2_TX/T5_CH3/T9_CH1/T2_CH3/A_IN2
VCAP_2
VCAP_1
D107
B5819W
C140
4.7u
Y101
32.768 kHz
C115
12p
C116
12p
C119
100n
Y102
20 MHz
C132
18p
C136
18p
C122
100n
C124
100n
C120
100n
GNDA
V33REF
V33A
C130
100n
C113
100n
C114
2.2u
C131
2.2u
C127
100n
R131
0
R128
10k
R123
2.2k
R122
2.2k
I2C_SDA
I2C_SCL
VIGN
PWR_EN
*VIGN input is unprotected!
*A21 is duplicated for ADC and EINT
OpAmp3
opamp.SchDoc
OpAmp4
opamp.SchDoc
OpAmp5
opamp_crank.SchDoc
OpAmp6
opamp.SchDoc
IN_AUX2
IN_AUX3
IN_CAM
IN_TPS
IN_CLT
IN_MAP1
IN_IAT
IN_O2S
IN_CRANK
IN_PPS
IN_KNOCK
IN_MAP2
IN_VSS
IN_AUX4
IN_AUX1
IN_O2S2
IN1
IN2
IN3
IN4
IN1 (CRNK)
OUT1
OUT2
OUT3
OUT4
A21
A20
A19
A17
A11
A9
A14
A24
A18
A15
A10
D5
A22
A23
A12
R143
R145
WAKEUP
A13
R143 populated: analog input O2S
R145 populated: WAKEUP by CAN
OUT_INJ2
OUT_INJ6
OUT_PWM5
OUT_PWM4
OUT_PWM3
OUT_PWM2
OUT_INJ7
OUT_PWM6
OUT_PWM1
OUT_INJ8
OUT_INJ3
OUT_INJ4
R133
R134
Board ID
C133
1u
R104
100
SPI2_MOSI
SPI2_MISO
SPI2_SCK
SPI2_CS
R105
10k
R103
10k
VCC
R101
470
D103
D104
D105
D106
LED1
LED2
LED3
LED4
LED_GREEN
LED_YELLOW
LED-RED-0603
LED-GREEN-0603
LED-BLUE-0603
LED-YELLOW-0603
D102
USBM
USBP
USB_N
USB_P
VBUS
USBID
SRV05-4-P-T7
R121
10k
C101
100n
nReset
J101
VCC
NRESET
GND
SWDIO
SWCLK
SWO
TC2030-IDC-NL

See pullups replacement file for actual values

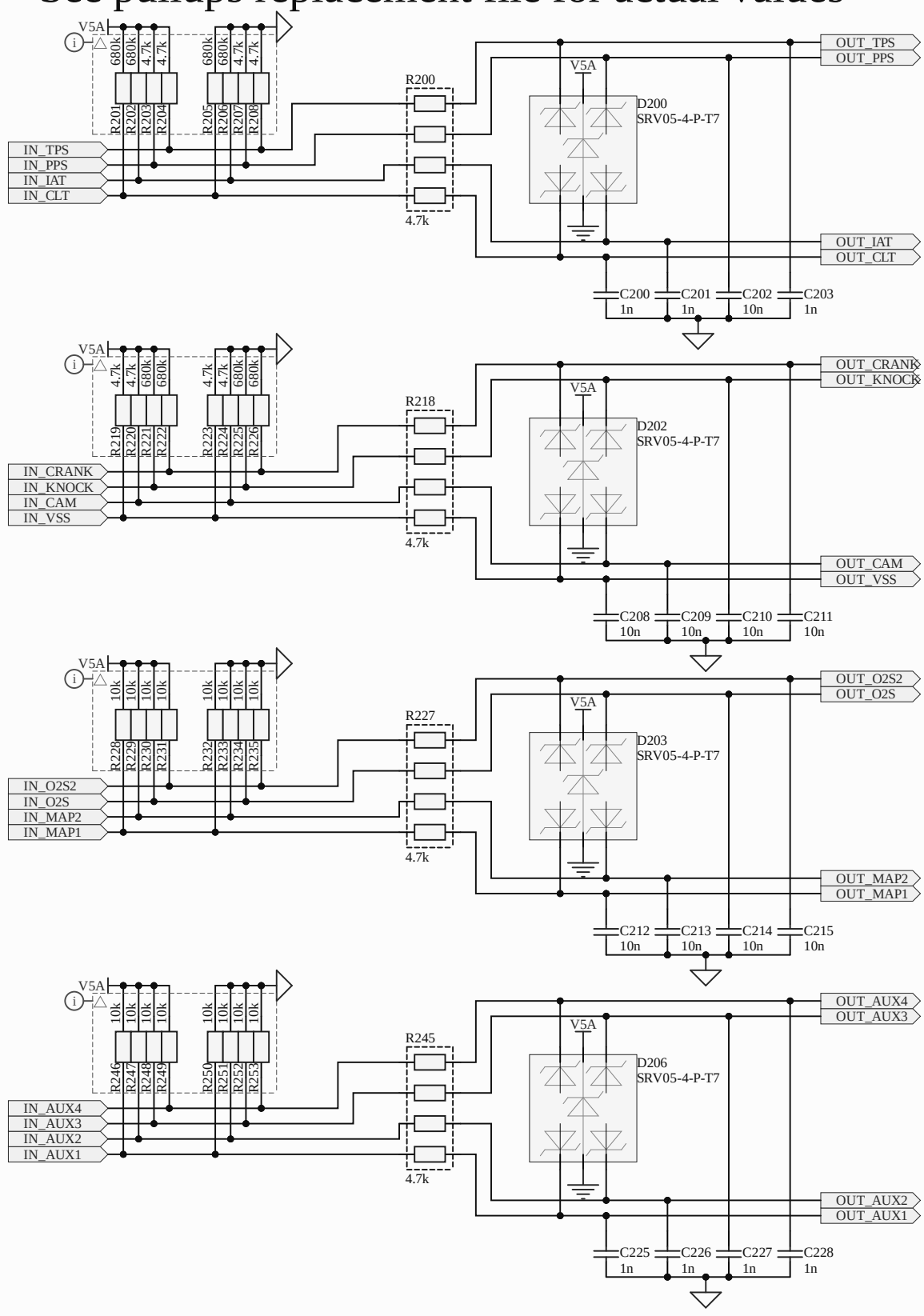

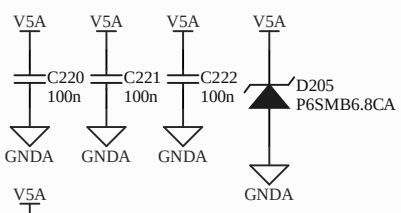

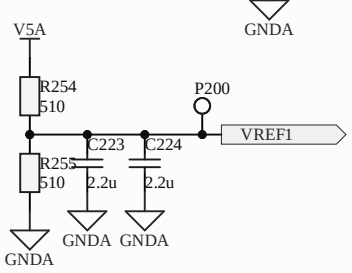

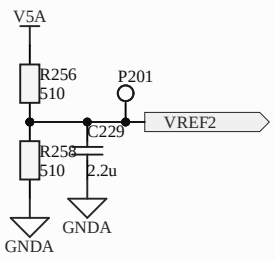

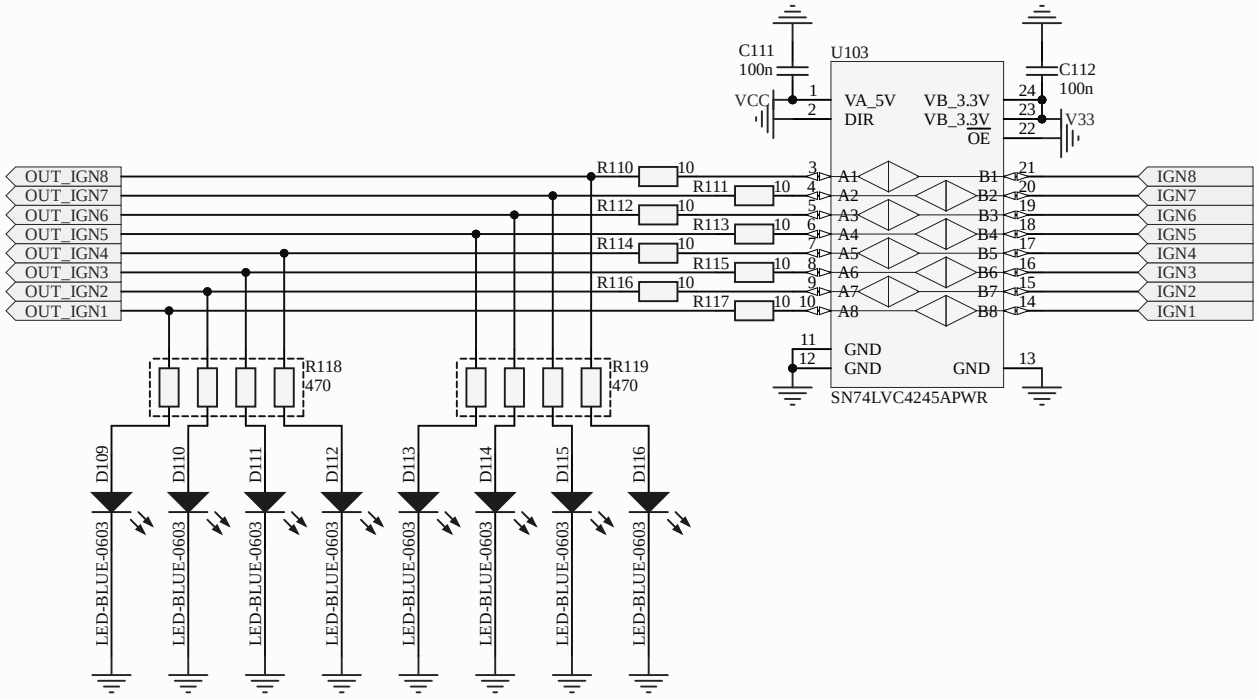
U103
C111
100n
C112
100n
VCC
V33
VA_5V
DIR
VB_3.3V
VB_3.3V
OE
GND
GND
GND
SN74LVC4245APWR
OUT_IGN8
OUT_IGN7
OUT_IGN6
OUT_IGN5
OUT_IGN4
OUT_IGN3
OUT_IGN2
OUT_IGN1
IGN8
IGN7
IGN6
IGN5
IGN4
IGN3
IGN2
IGN1
R110
R111
R112
R113
R114
R115
R116
R117
R118
470
R119
470
D109
D110
D111
D112
D113
D114
D115
D116
LED-BLUE-0603

See pullups replacement file for actual values

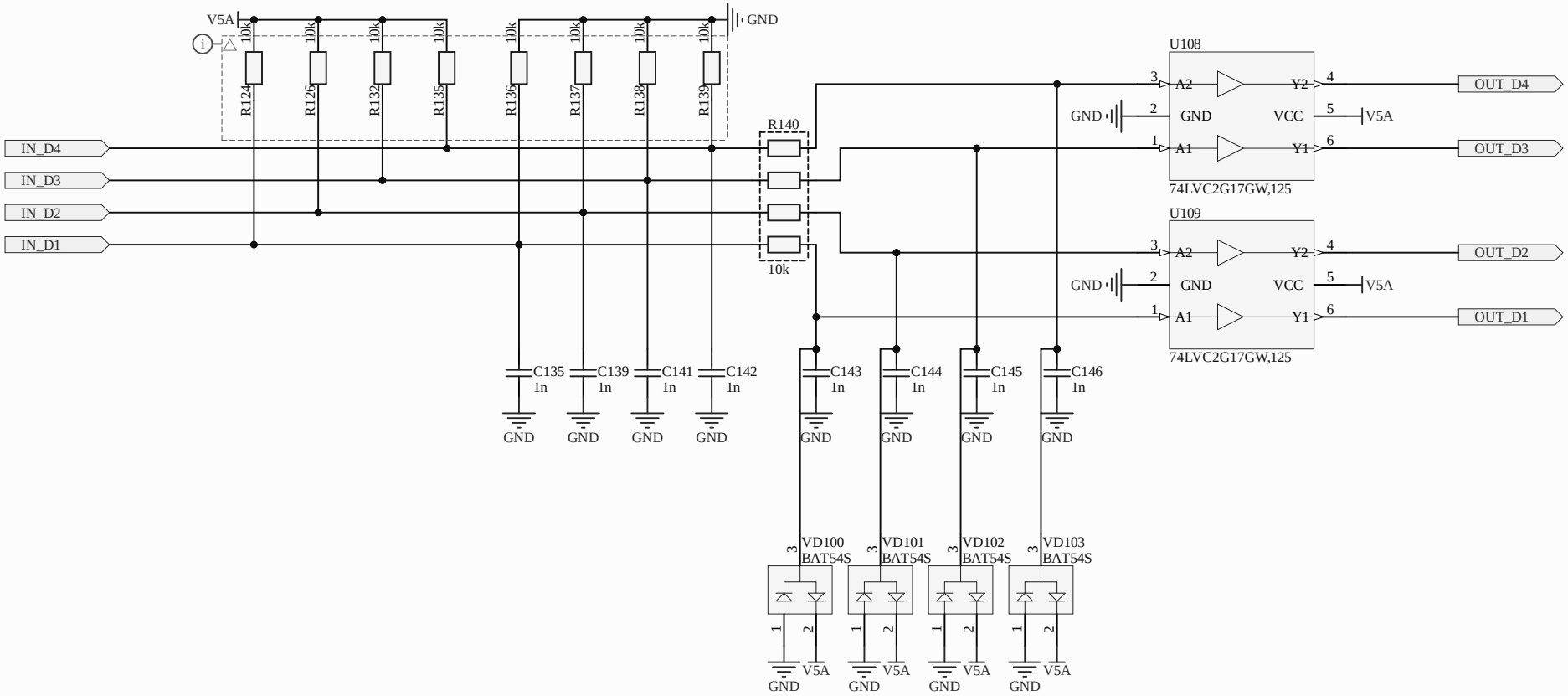

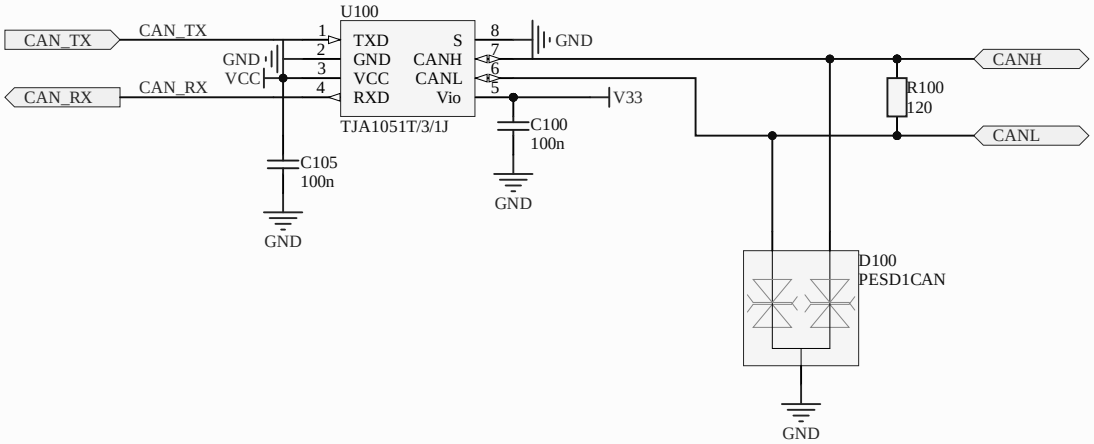
U100
CAN_TX
CAN_TX
CAN_RX
CAN_RX
GND
VCC
1
2
3
4
TXD
GND
VCC
RXD
S
CANH
CANL
Vio
8
7
6
5
GND
V33
TJA1051T/3/1J
C100
100n
GND
C105
100n
GND
CANH
CANL
R100
120
D100
PESD1CAN
GND

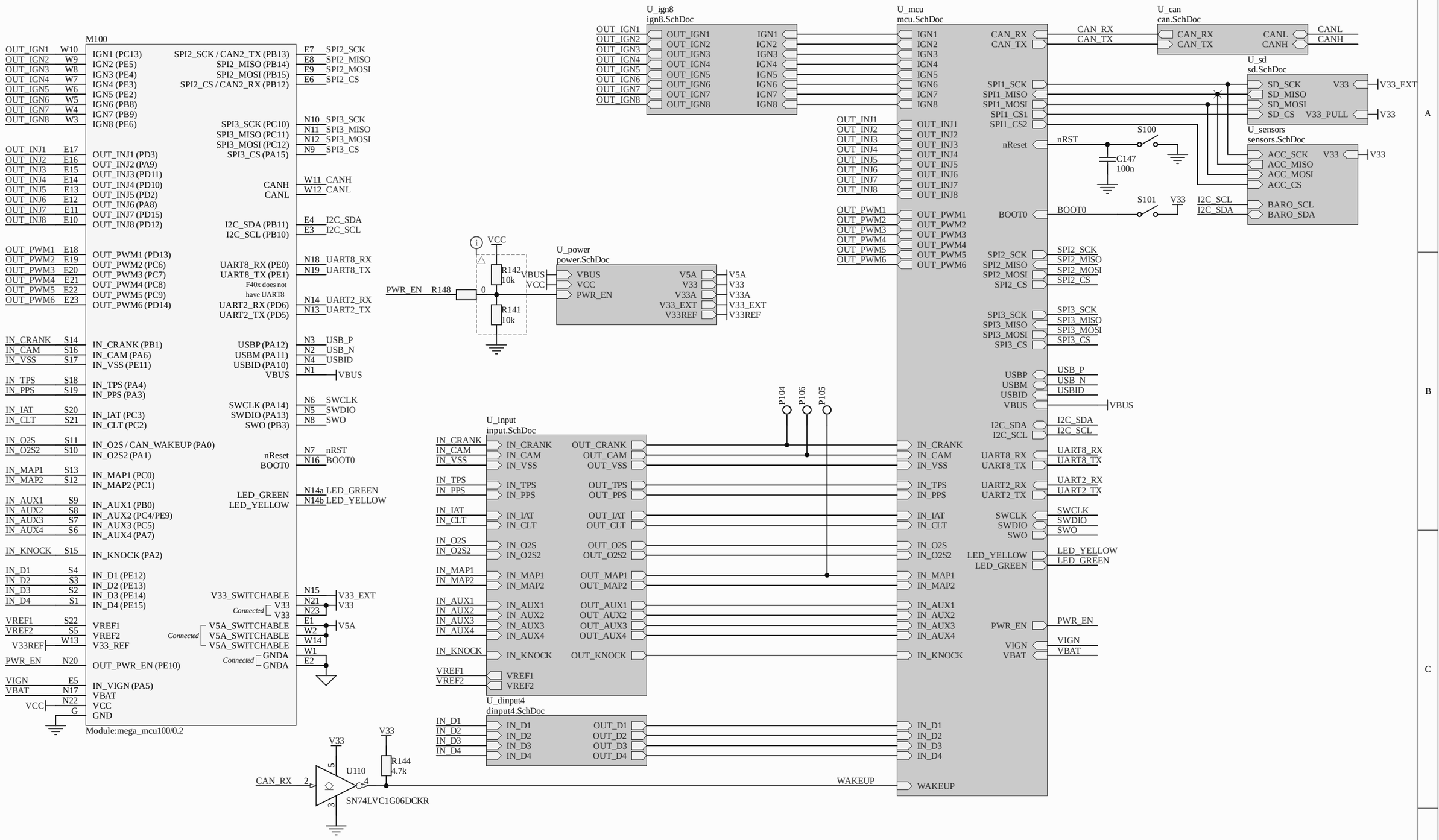
M100
Module:mega_mcu100/0.2
U_ign8
ign8.SchDoc
U_mcu
mcu.SchDoc
U_can
can.SchDoc
U_sd
sd.SchDoc
U_sensors
sensors.SchDoc
U_power
power.SchDoc
U_input
input.SchDoc
U_dinput4
dinput4.SchDoc
F40x does not have UART8
S100
S101
C147 100n
R142 10k
R141 10k
R148
R144 4.7k
U110
SN74LVC1G06DCKR
CAN_RX
WAKEUP
P104
P106
P105

More accurate threshold for "raw" connection of VR sensors

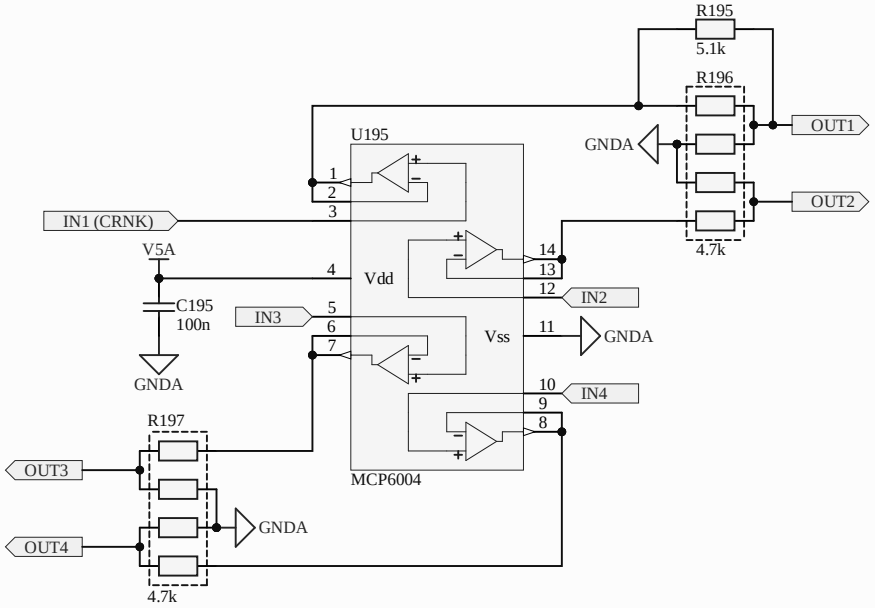

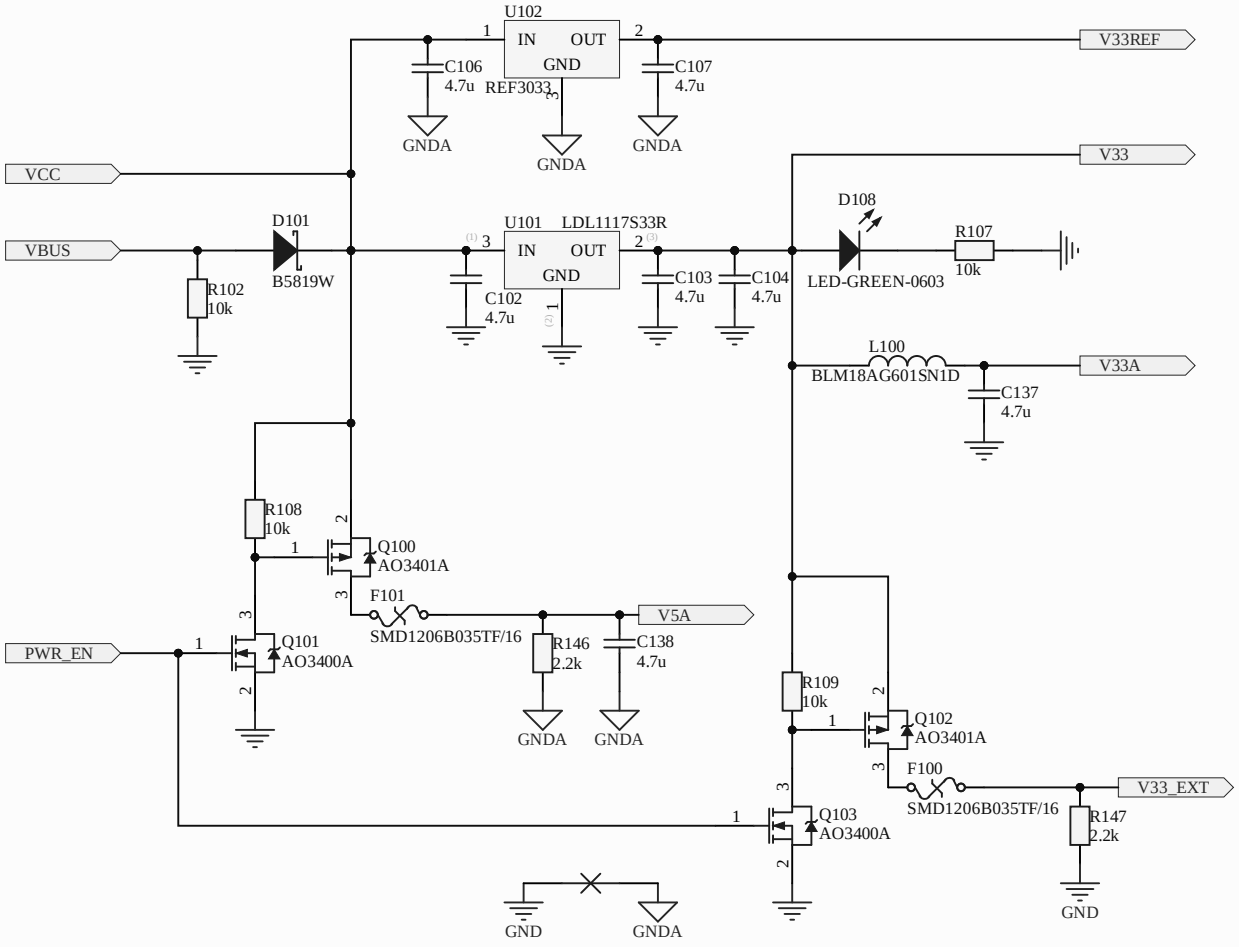

Title		
Size A4	Number	Revision
Date: 5.03.2025	Sheet of	
File: C:\Work\..\power.SchDoc	Drawn By:	

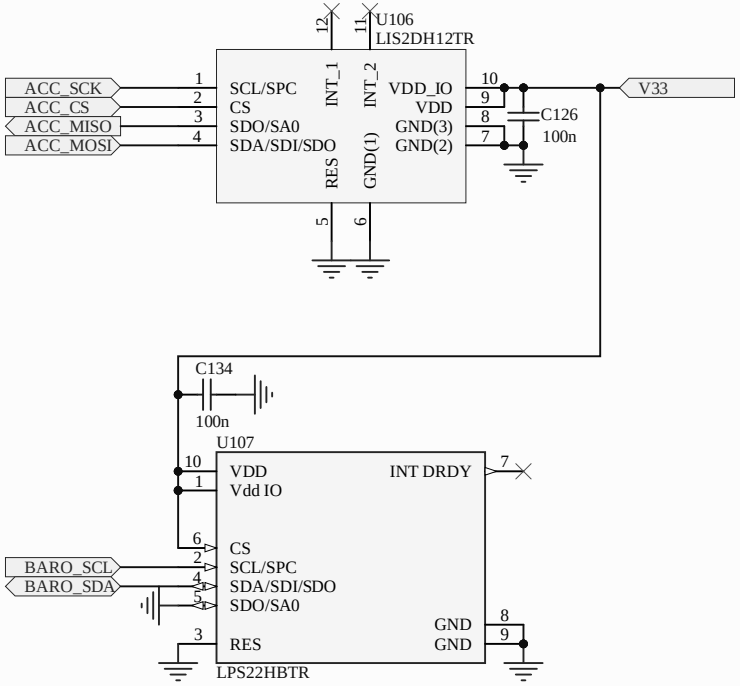
U106
LIS2DH12TR
ACC_SCK
ACC_CS
ACC_MISO
ACC_MOSI
SCL/SPC
CS
SDO/SA0
SDA/SDI/SDO
INT_1
INT_2
RES
GND(1)
VDD_IO
VDD
GND(3)
GND(2)
C126
100n
V33
C134
100n
U107
VDD
Vdd IO
INT DRDY
CS
SCL/SPC
SDA/SDI/SDO
SDO/SA0
RES
GND
GND
BARO_SCL
BARO_SDA
LPS22HBTR

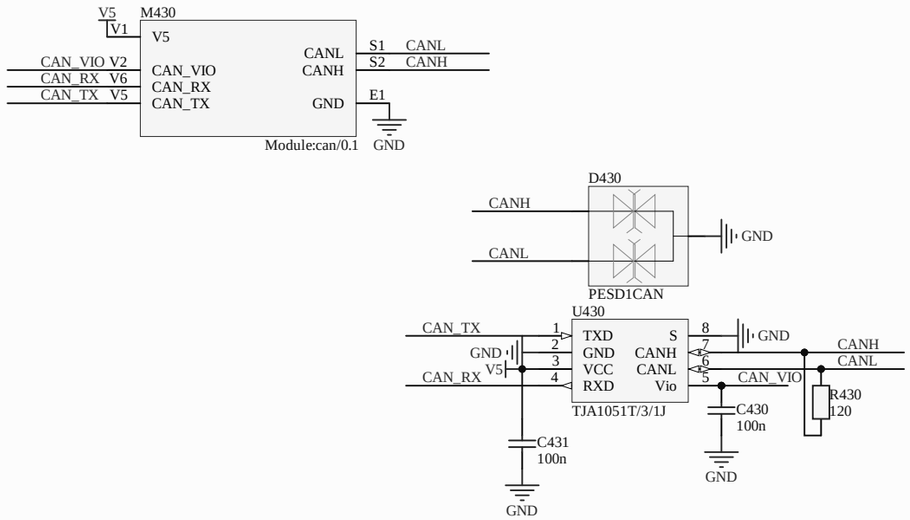

Title: ***Hellen-One CAN***			***rusEFI EMS*** ***Hellen-One Platform*** *https://rusefi.com/s/hellen72*
Size: A3	Author: andreika	Revision: 0.1	
Date: 02.03.2021		Sheet 1 of 1	

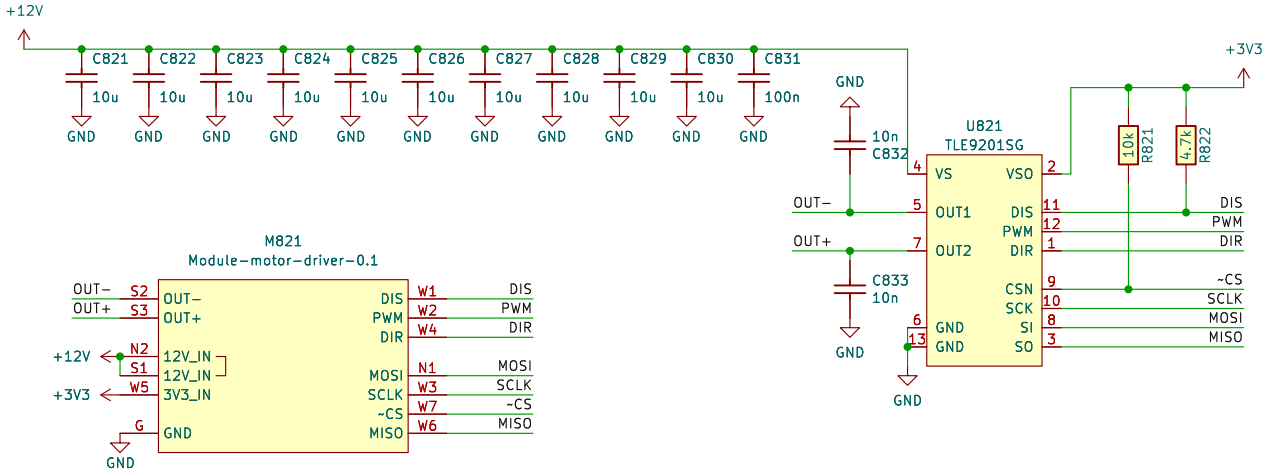

Sheet: /
File: hellen1−motor−driver.kicad_sch

Title: Motor−driver module

Size: A4	Date: 2024−03−07	**Rev: 0.1**
KiCad E.D.A. 8.0.3		Id: 1/1

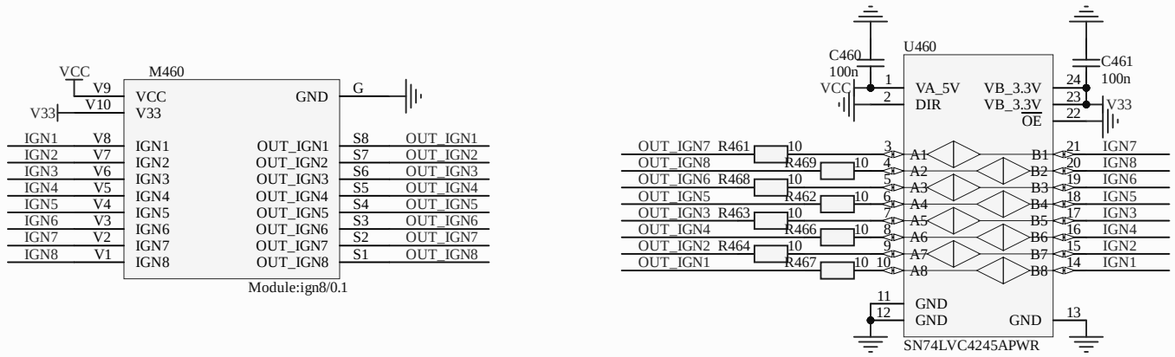

Title: ***Hellen-One IGN8***			***rusEFI EMS*** ***Hellen-One Platform*** *https://rusefi.com/s/hellen1/*
Size: A3	Author: andreika	Revision: 0.2	
Date: 18/03/2022		Sheet 1 of 1	