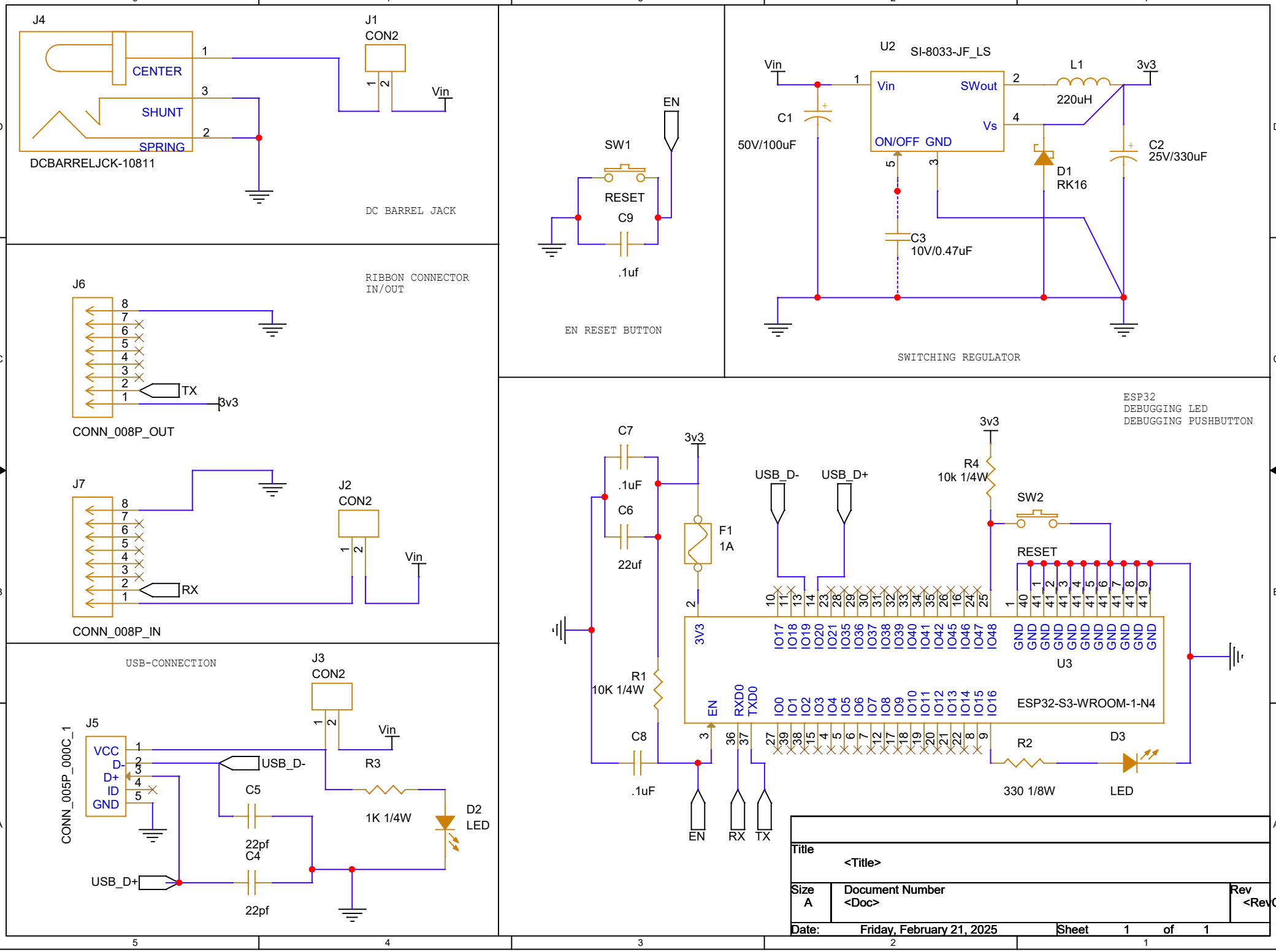

Title	<Title>
Size A	Document Number <Doc>
Rev	<RevCo
Date: Friday, February 21, 2025	Sheet 1 of 1