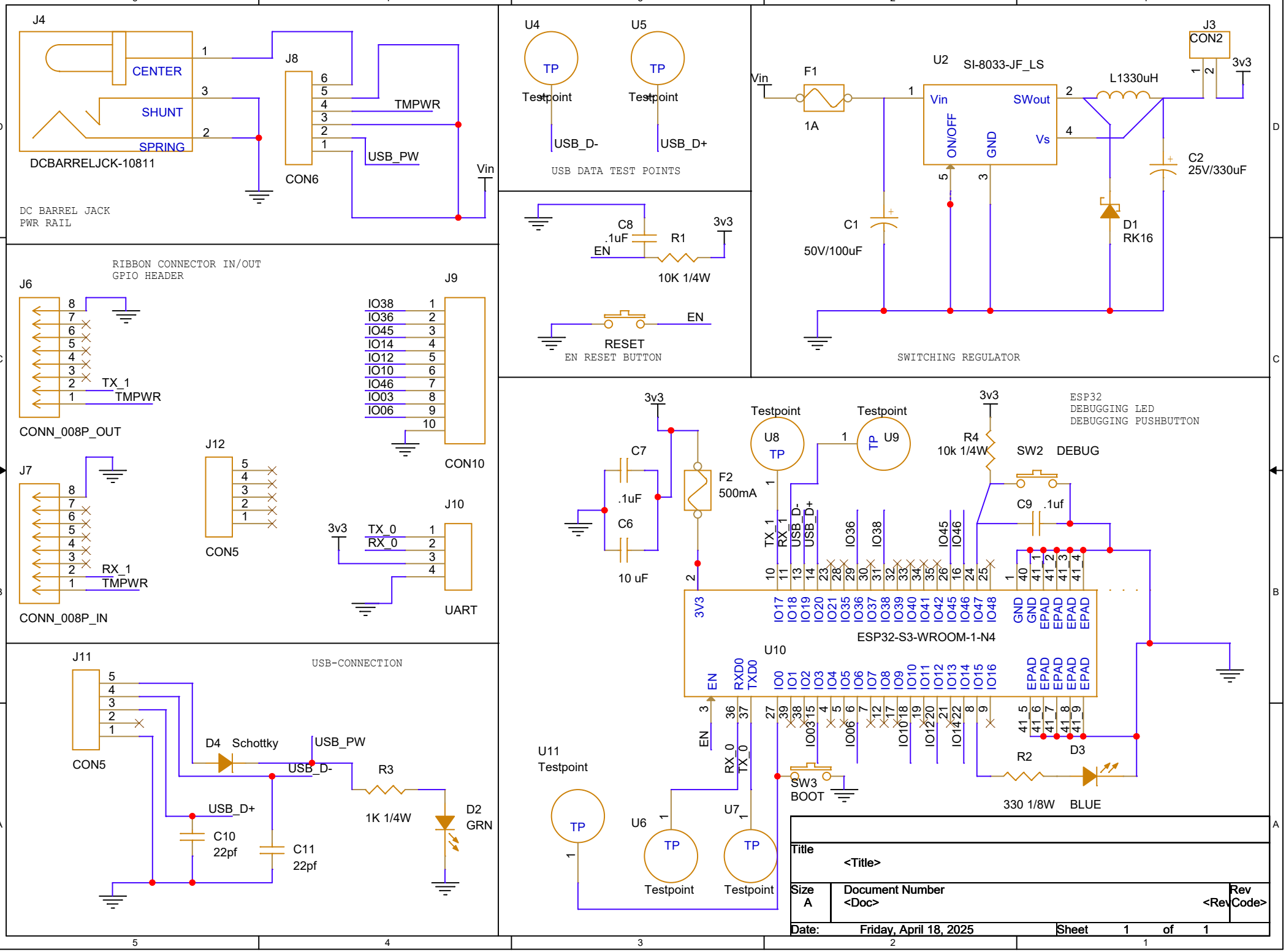
J4
CENTER
SHUNT
SPRING
DCBARRELJCK-10811
J8
CON6
TMPWR
USB_PW
Vin
DC BARREL JACK
PWR RAIL
U4
U5
TP
Testpoint
USB_D-
USB_D+
USB DATA TEST POINTS
C8
.1uF
EN
R1
3v3
10K 1/4W
RESET
EN RESET BUTTON
Vin
F1
1A
U2
SI-8033-JF_LS
Vin
SWout
ON/OFF
GND
Vs
L1330uH
J3
CON2
3v3
C2
25V/330uF
C1
50V/100uF
D1
RK16
SWITCHING REGULATOR
RIBBON CONNECTOR IN/OUT
GPIO HEADER
J6
TX_1
TMPWR
CONN_008P_OUT
J7
RX_1
TMPWR
CONN_008P_IN
J12
CON5
J9
IO38
IO36
IO45
IO14
IO12
IO10
IO46
IO03
IO06
CON10
J10
3v3
TX_0
RX_0
UART
J11
CON5
USB-CONNECTION
D4
Schottky
USB_PW
USB_D-
USB_D+
R3
1K 1/4W
D2
GRN
C10
22pf
C11
22pf
C7
.1uF
C6
10 uF
F2
500mA
U8
U9
R4
10k 1/4W
SW2
DEBUG
C9
.1uf
ESP32
DEBUGGING LED
DEBUGGING PUSHBUTTON
ESP32-S3-WROOM-1-N4
U10
U11
Testpoint
U6
U7
SW3
BOOT
R2
330 1/8W
D3
BLUE
Title
<Title>
Size
A
Document Number
<Doc>
Rev
<Rev Code>
Date:
Friday, April 18, 2025
Sheet
1
of
1