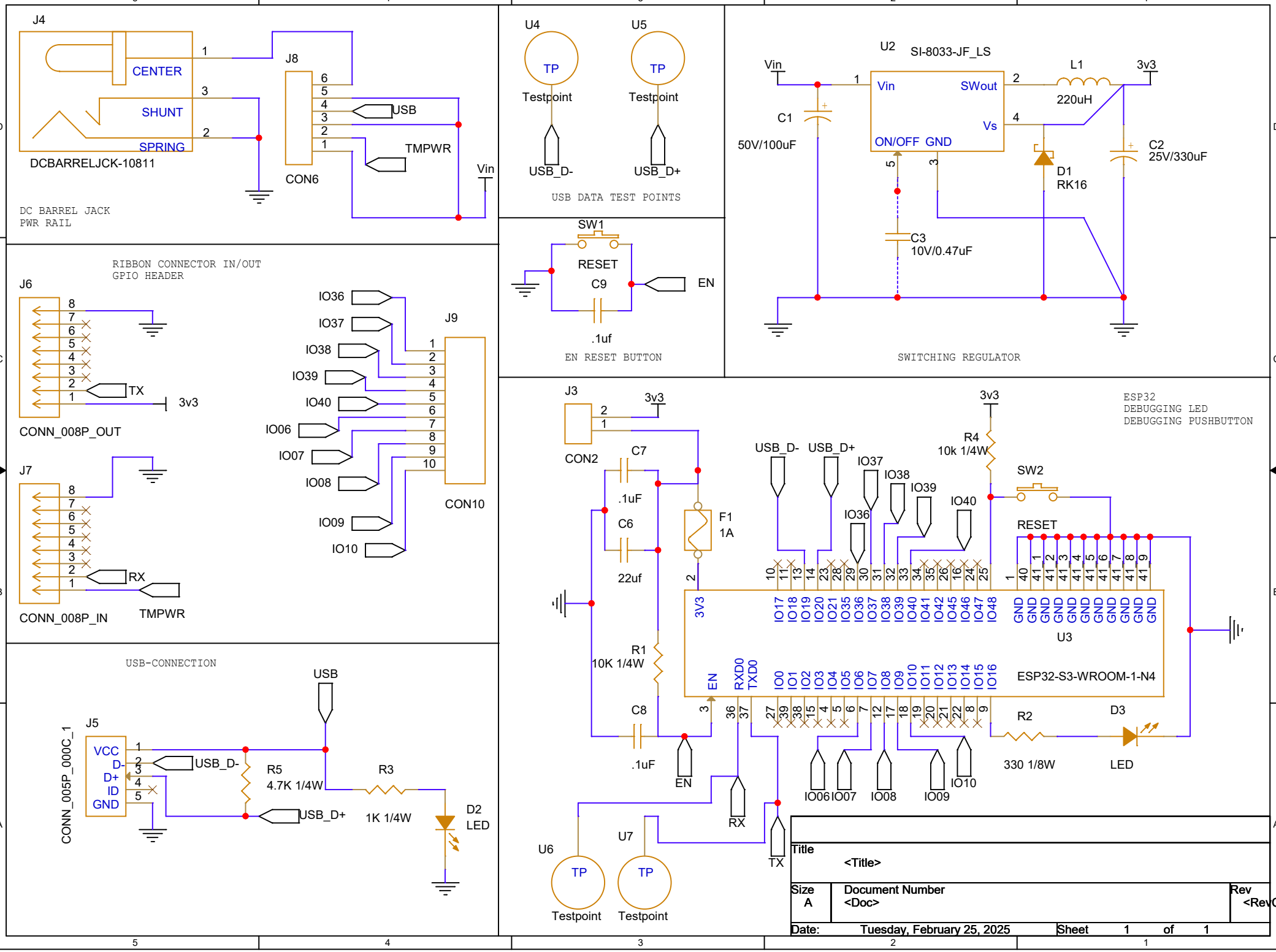
J4
CENTER
SHUNT
SPRING
DCBARRELJCK-10811
J8
CON6
USB
TMPWR
Vin
DC BARREL JACK
PWR RAIL
U4
U5
TP
Testpoint
USB_D-
USB_D+
USB DATA TEST POINTS
U2
SI-8033-JF_LS
Vin
SWout
Vs
ON/OFF
GND
L1
220uH
3v3
C1
50V/100uF
C2
25V/330uF
D1
RK16
C3
10V/0.47uF
SWITCHING REGULATOR
SW1
RESET
C9
EN
.1uf
EN RESET BUTTON
RIBBON CONNECTOR IN/OUT
GPIO HEADER
J6
TX
3v3
CONN_008P_OUT
J7
RX
TMPWR
CONN_008P_IN
IO36
IO37
IO38
IO39
IO40
IO06
IO07
IO08
IO09
IO10
J9
CON10
J3
CON2
C7
.1uF
C6
22uf
F1
1A
R1
10K 1/4W
C8
.1uF
EN
RX
TX
U6
U7
Testpoint
USB_D-
USB_D+
R4
10k 1/4W
SW2
RESET
ESP32
DEBUGGING LED
DEBUGGING PUSHBUTTON
U3
ESP32-S3-WROOM-1-N4
R2
330 1/8W
D3
LED
USB-CONNECTION
J5
CONN_005P_000C_1
VCC
D-
D+
ID
GND
USB
R5
4.7K 1/4W
R3
1K 1/4W
D2
LED
Title
<Title>
Size
A
Document Number
<Doc>
Rev
<RevCo
Date:
Tuesday, February 25, 2025
Sheet
1
of
1