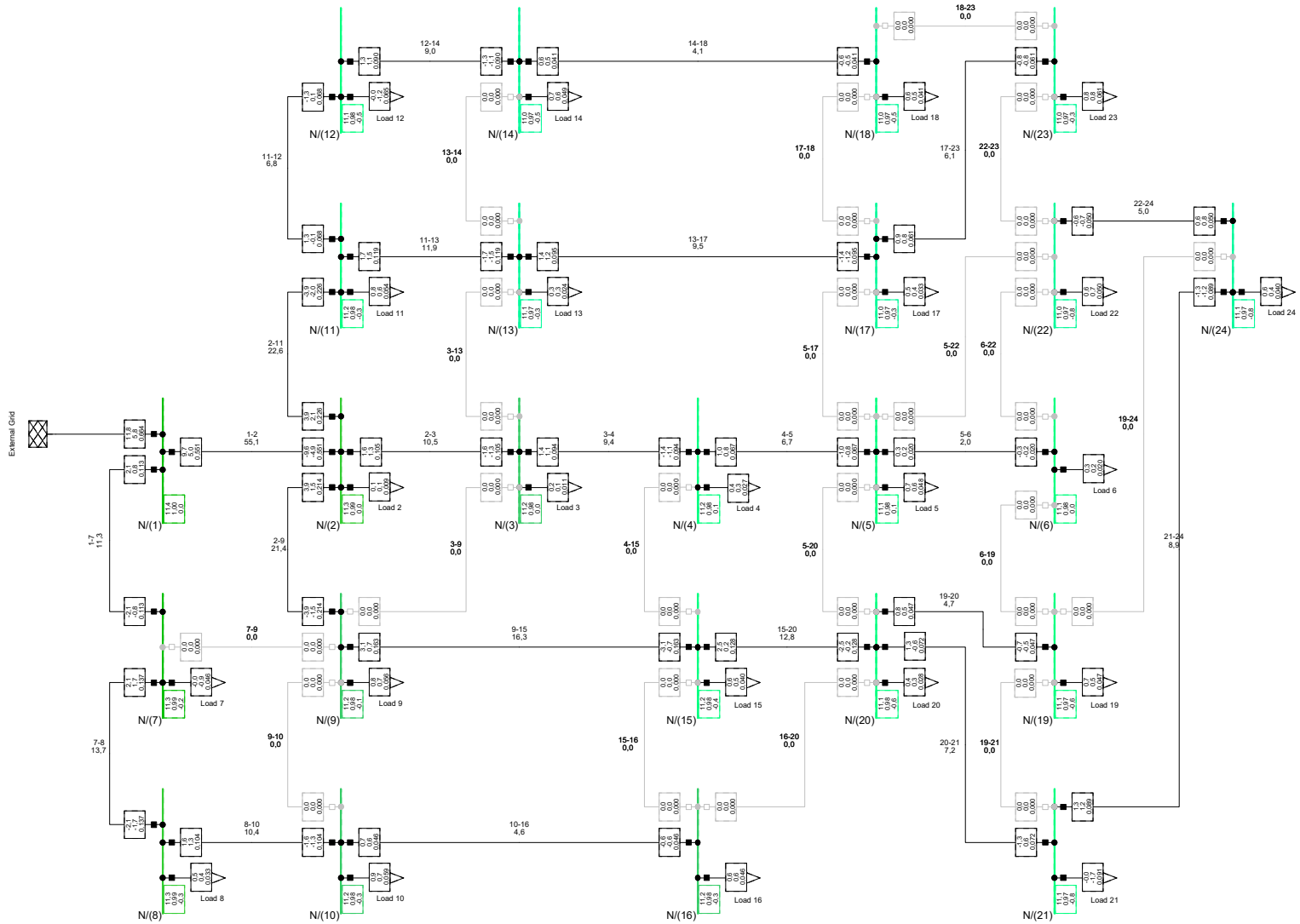

Load Flow Balanced	
Nodes	Branches
Line-Line Voltage, Magnitude [kV]	Active Power [MW]
Voltage, Magnitude [p.u.]	Reactive Power [Mvar]
Voltage, Angle [deg]	Current, Magnitude [kA]

		Project:
		Graphic: Grid
		Date: 4/5/2026
PowerFactory 15.1.7		Annex: