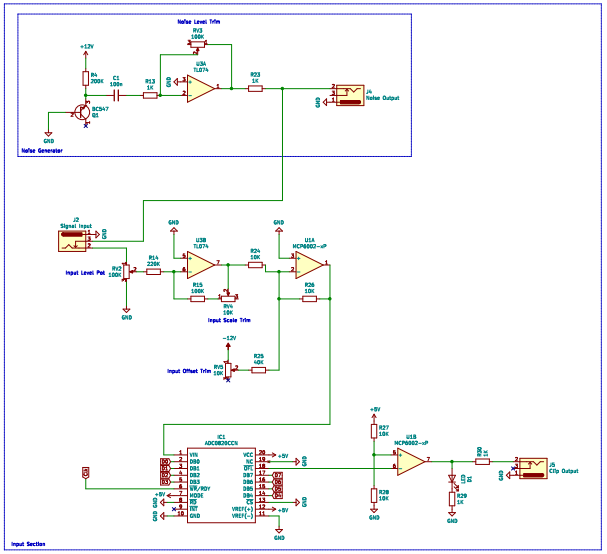

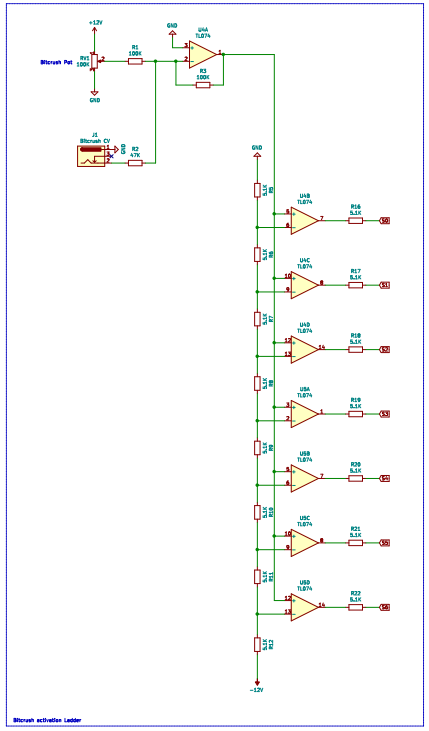

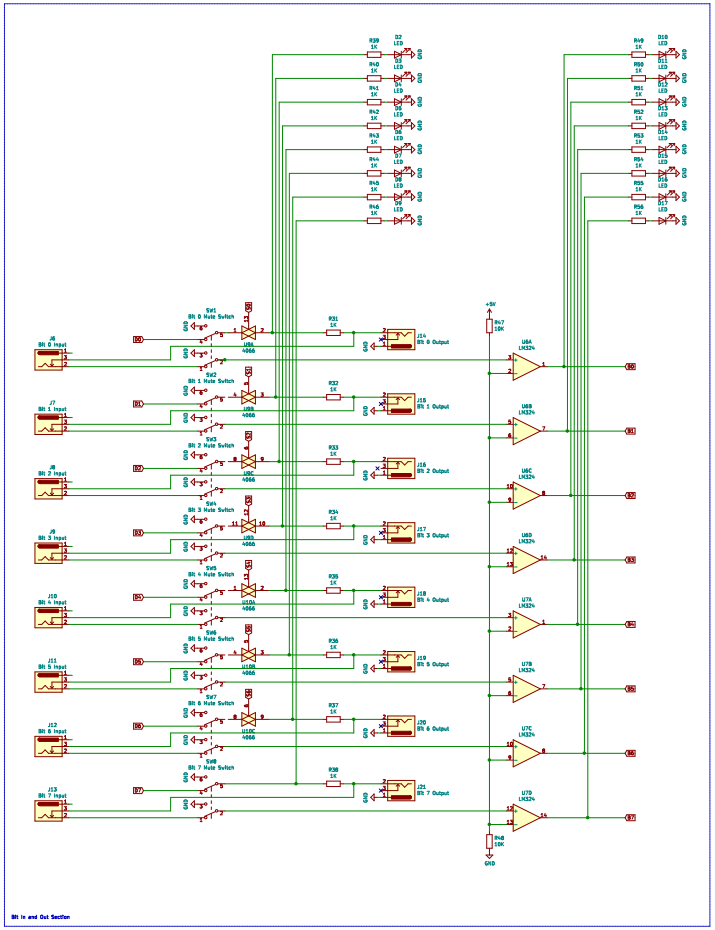

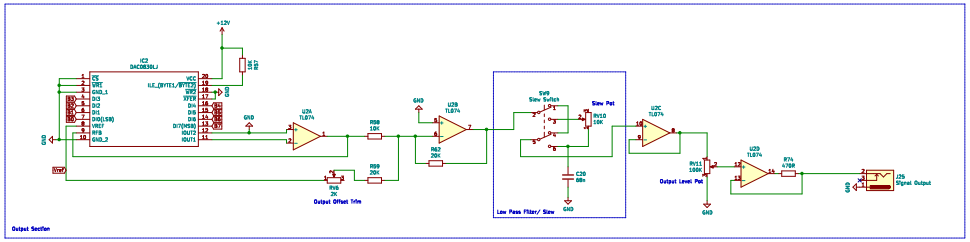

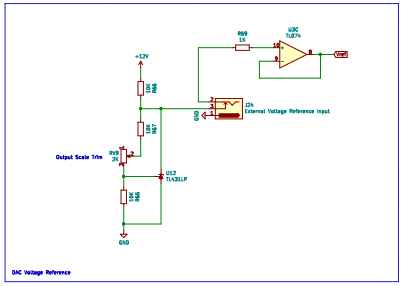

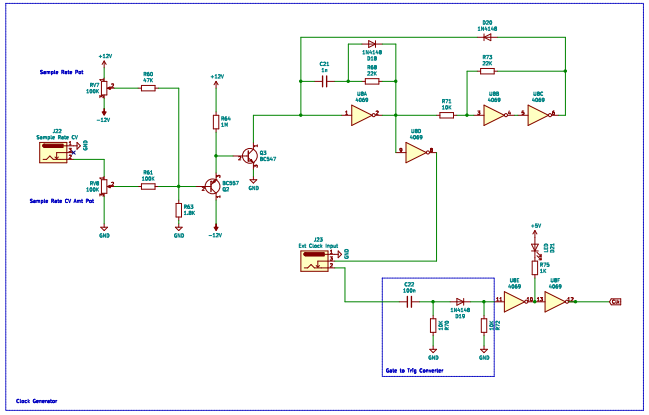

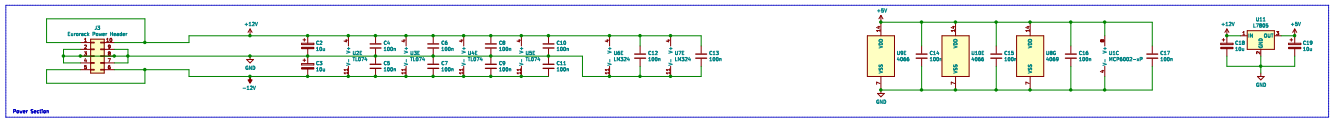

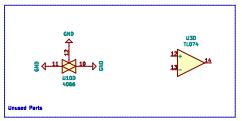

Sheets /
File: BITMAP.sch
Title:
Size: A1 | Date: | Rev:
KiCad E.D.A. kicad (5.1.10)-1 | Id: 1/1