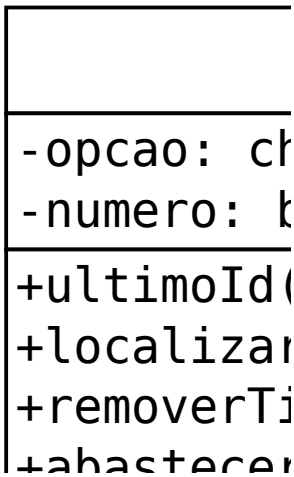
-opcao: ch
-numero: b
+ultimoId(
+localizar
+removerTi
+abastecer

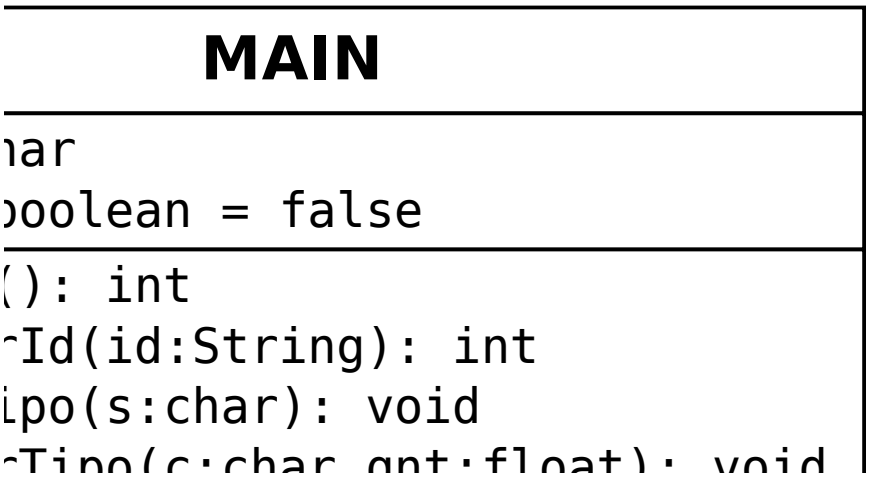
MAIN
ar
oolean = false
(): int
Id(id:String): int
ipo(s:char): void
Tipo(c:char,gnt:float): void

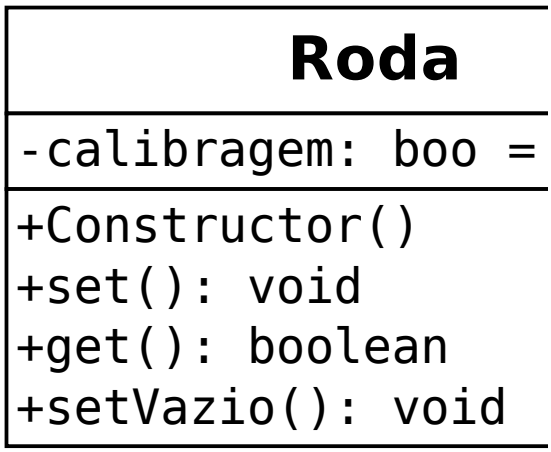
Roda
-calibragem: boo =
+Constructor()
+set(): void
+get(): boolean
+setVazio(): void

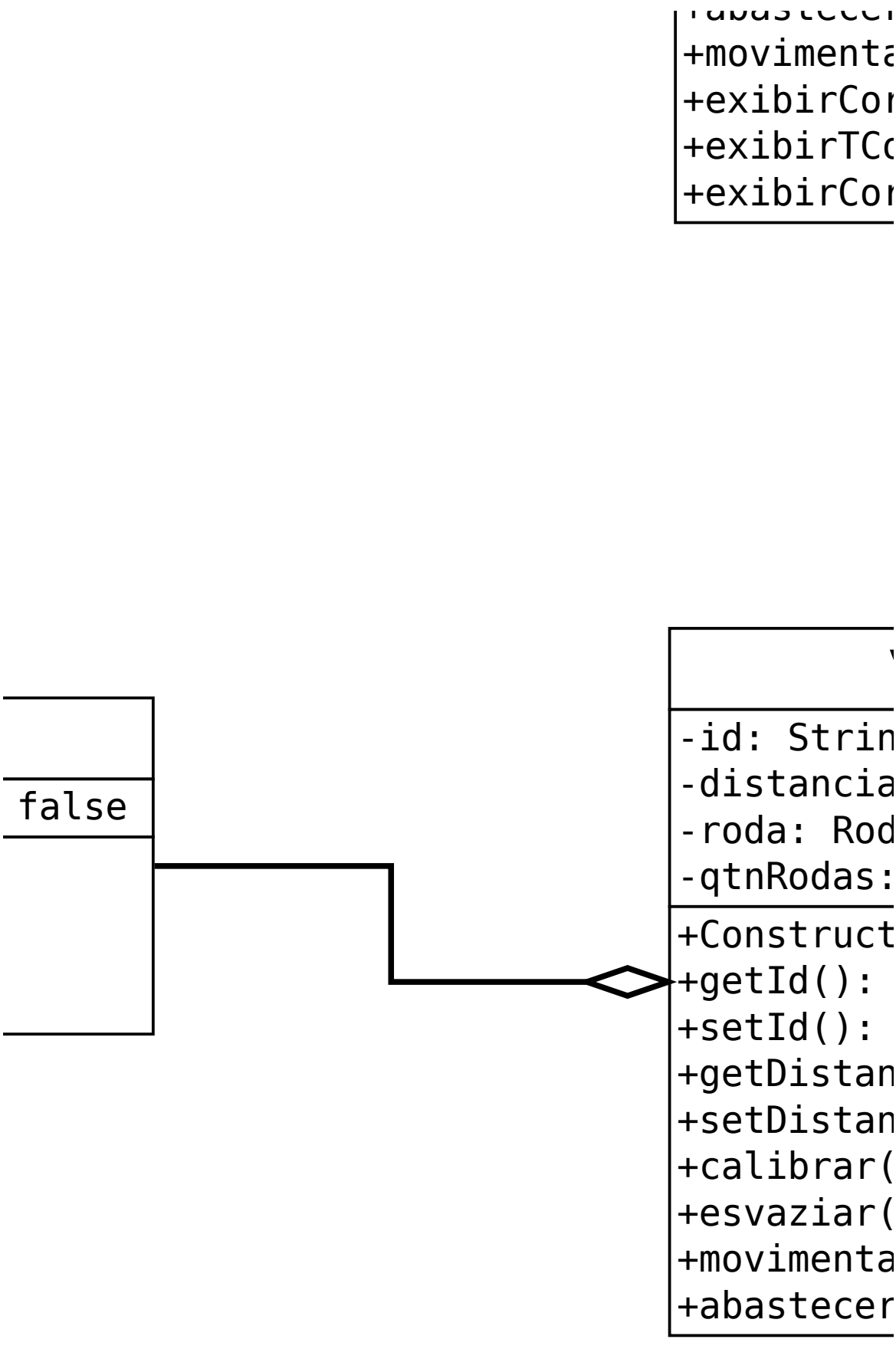
+movimenta
+exibirCor
+exibirTCo
+exibirCor
false
-id: Strin
-distancia
-roda: Rod
-qtnRodas:
+Construct
+getId():
+setId():
+getDistan
+setDistan
+calibrar(
+esvaziar(
+movimenta
+abastecer

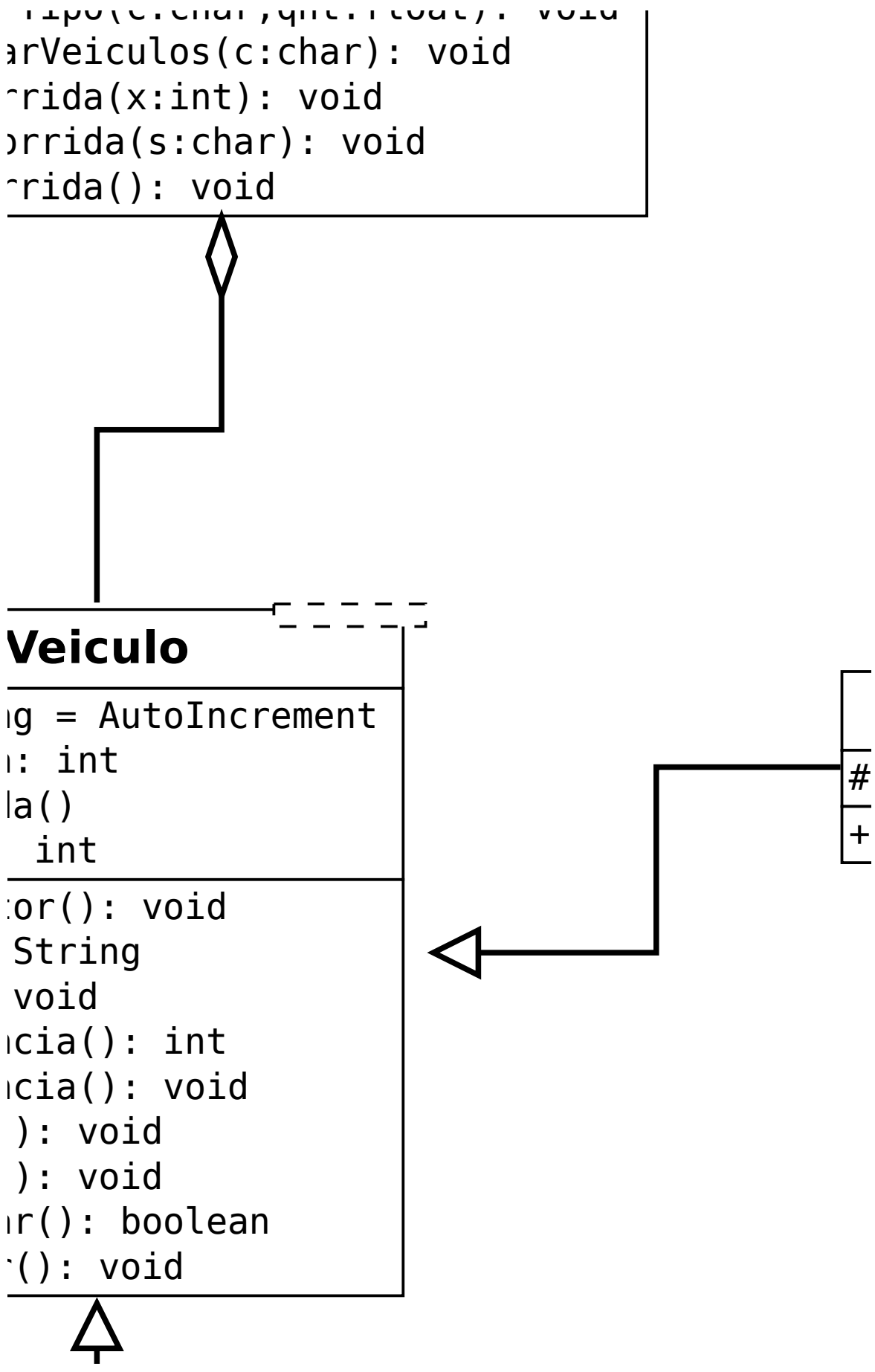
arVeiculos(c:char): void
rrida(x:int): void
rrida(s:char): void
rrida(): void
Veiculo
g = AutoIncrement
: int
la()
int
or(): void
String
void
cia(): int
cia(): void
): void
): void
r(): boolean
(): void
#
+

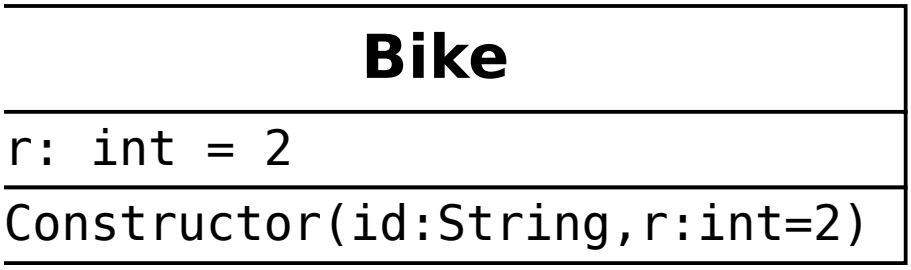
Bike
r: int = 2
Constructor(id:String,r:int=2)

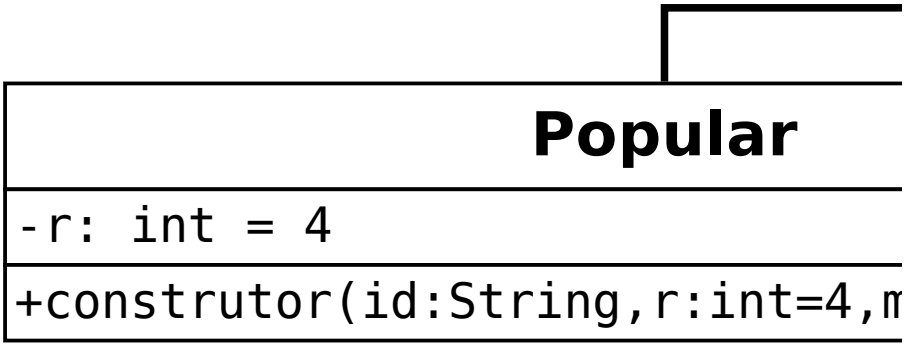
Popular
-r: int = 4
+construtor(id:String,r:int=4,m

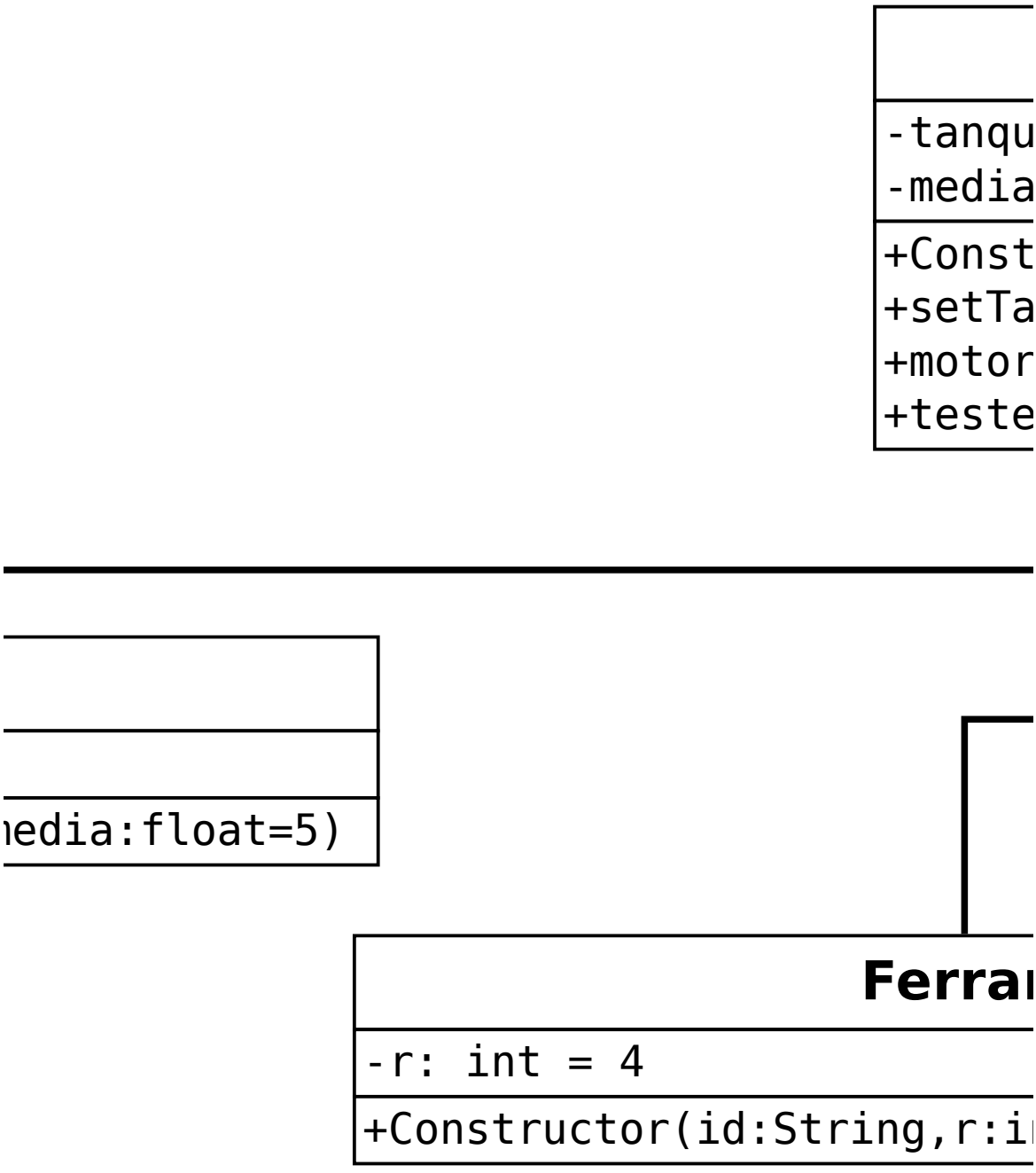
-tanqu
-media
+Const
+setTa
+motor
+teste
edia:float=5)
Ferra
-r: int = 4
+Constructor(id:String,r:i

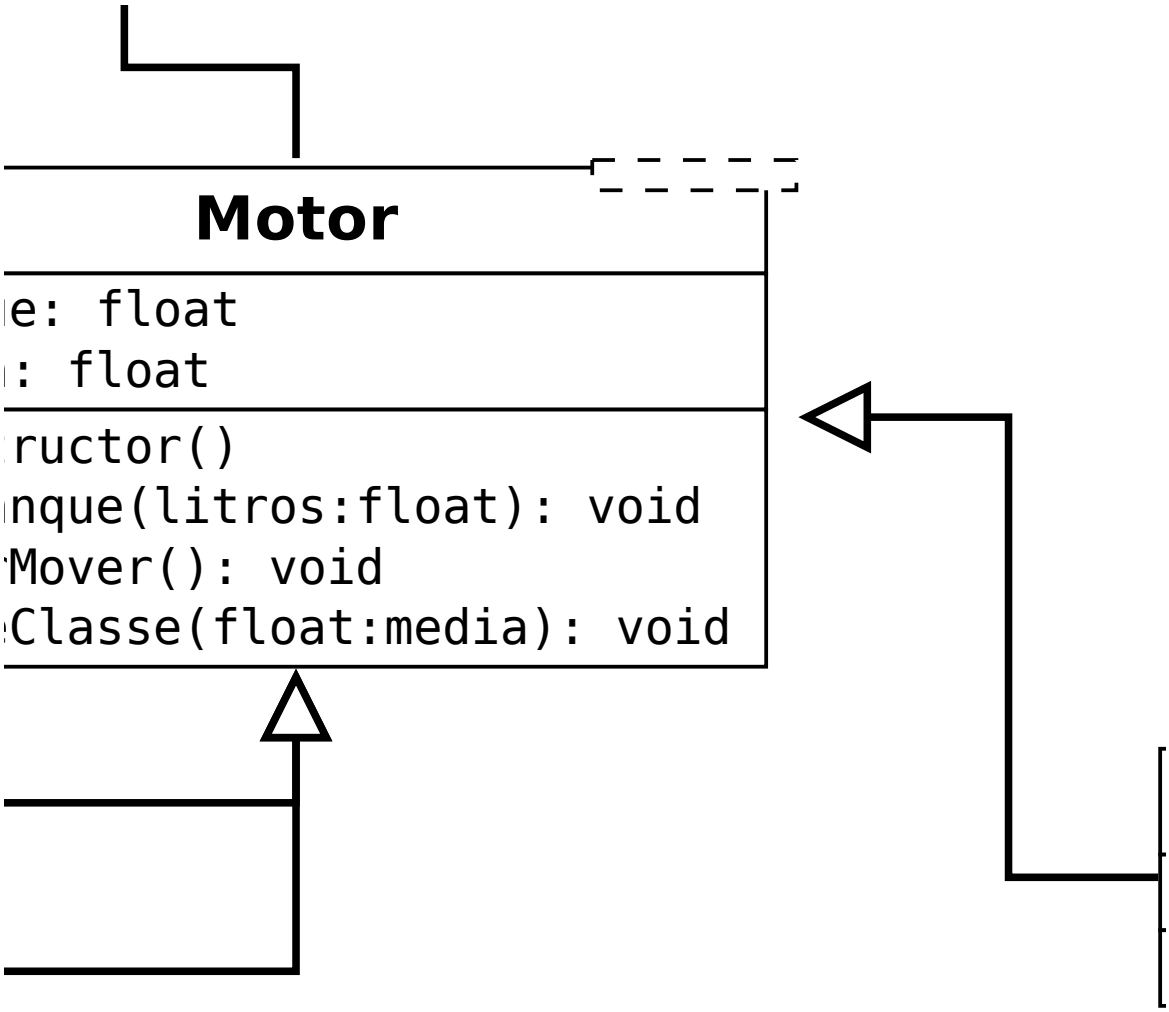
Motor
e: float
: float
ructor()
nque(litros:float): void
Mover(): void
Classe(float:media): void
ri
nt=4,media:float=15)

Motoneta
-r: int = 2
+Constructor(id:String,r:int=2,media:flo