# BLM1033 - Circuit Theory and Electronics

**The Instructors:**

Doç. Dr. Hamza Osman İlhan
hoilhan@yildiz.edu.tr
Prof. Dr. Gökhan Bilgin
gbilgin@yildiz.edu.tr

**Lab Assistants:**

| | |
|---|---|
| (Elektronik) | Arş. Gör. Burak Ahmet Özden |
| (Elektronik) | Arş. Gör. İdris Demir |
| (Devre) | Arş. Gör. Elif Aşıcı |
| (Devre) | Arş. Gör. Ömer Mutlu Türk Kaya |
| (Proje) | Arş. Gör. Barış Akkuş |

# Ohm's Law
# Kirchhoff's Current Law (KCL)
# Kirchhoff's Voltage Law (KVL)
# Serial / Parallel Circuits
# Voltage Divider
# Current Divider

# Objectives of the Lecture

- Present Kirchhoff's Current and Voltage Laws.
- Demonstrate how these laws can be used to find currents and voltages in a circuit.
- Explain how these laws can be used in conjunction with Ohm's Law.
- Explain mathematically how resistors in series are combined and their equivalent resistance.
- Explain mathematically how resistors in parallel are combined and their equivalent resistance.
- Rewrite the equations for conductance's.
- Explain mathematically how a voltage that is applied to resistors in series is distributed among the resistors.
- Explain mathematically how a current that enters the a node shared by resistors in parallel is distributed among the resistors.

# Resistivity, ρ

- Resistivity is a material property
  - Dependent on the number of free or mobile charges (usually electrons) in the material.
    - In a metal, this is the number of electrons from the outer shell that are ionized and become part of the 'sea of electrons'
  - Dependent on the mobility of the charges
    - Mobility is related to the velocity of the charges.
    - It is a function of the material, the frequency and magnitude of the voltage applied to make the charges move, and temperature.

# Resistivity of Common Materials at Room Temperature (300K)

| Material | Resistivity (Ω-cm) | Usage |
|---|---|---|
| Silver | $1.64 \times 10^{-8}$ | Conductor |
| Copper | $1.72 \times 10^{-8}$ | Conductor |
| Aluminum | $2.8 \times 10^{-8}$ | Conductor |
| Gold | $2.45 \times 10^{-8}$ | Conductor |
| Carbon (Graphite) | $4 \times 10^{-5}$ | Conductor |
| Germanium | 0.47 | Semiconductor |
| Silicon | 640 | Semiconductor |
| Paper | $10^{10}$ | Insulator |
| Mica | $5 \times 10^{11}$ | Insulator |
| Glass | $10^{12}$ | Insulator |
| Teflon | $3 \times 10^{12}$ | Insulator |

# Resistance, R

- Resistance takes into account the physical dimensions of the material

$$R = \rho \frac{L}{A}$$

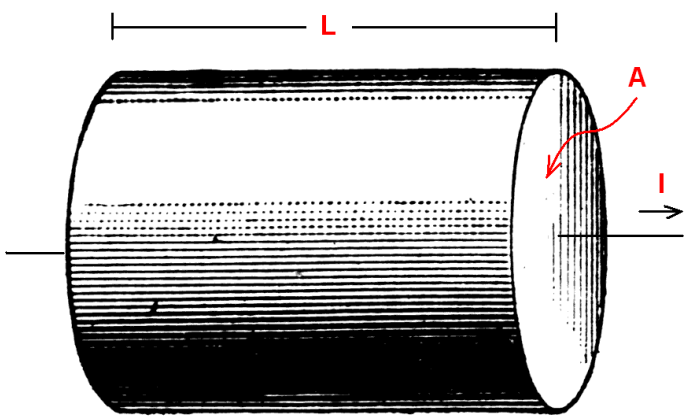


– where:

- L is the length along which the carriers are moving

- A is the cross-sectional area that the free charges move through.

# Ohm's Law

- Voltage drop across a resistor is proportional to the current flowing through the resistor

$$\mathrm{v} = iR$$

Units: V = AΩ

where A = C/s

# Short Circuit

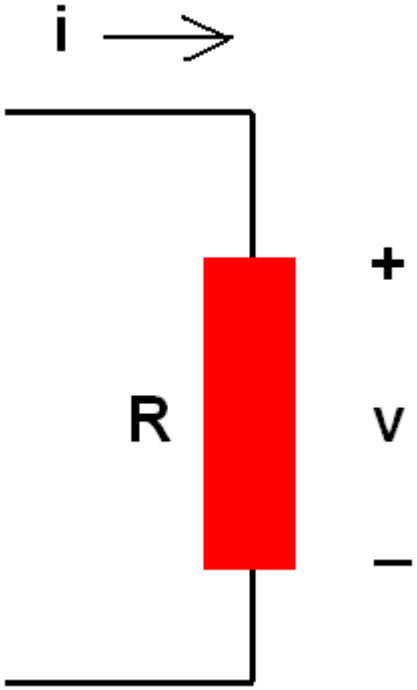


- If the resistor is a perfect conductor (or a short circuit)

  $R = 0\ \Omega$,

- then

  $v = iR = 0\ V$

  – no matter how much current is flowing through the resistor

# Open Circuit

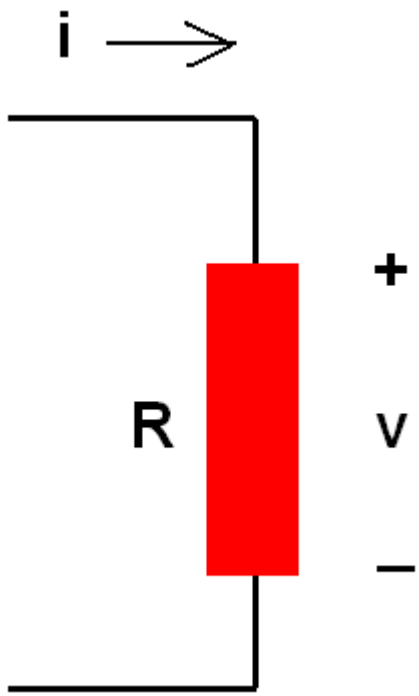


- If the resistor is a perfect insulator, $R = \infty\ \Omega$
- then

$$i = \lim_{R \to \infty} \frac{v}{R} = 0$$

  – no matter how much voltage is applied to (or dropped across) the resistor.

# Conductance, G

- Conductance is the reciprocal of resistance

$$G = R^{-1} = i/v$$

– Unit for conductance is S (siemens) or (mhos, ℧)

$$G = A\sigma/L$$

where $\sigma$ is conductivity,

which is the inverse of resistivity, $\rho$

# Power Dissipated by a Resistor

$$p = iv = i(iR) = i^2R$$

$$p = iv = (v/R)v = v^2/R$$

$$p = iv = i(i/G) = i^2/G$$

$$p = iv = (vG)v = v^2G$$

# Power (con't)

- Since R and G are always real positive numbers
  - Power dissipated by a resistor is always positive
- The power consumed by the resistor is not linear with respect to either the current flowing through the resistor or the voltage dropped across the resistor
  - This power is released as heat. Thus, resistors get hot as they absorb power (or dissipate power) from the circuit.

# Short and Open Circuits

- There is no power dissipated in a short circuit.

$$p_{sc} = \mathrm{v}^2 R = (0\mathrm{V})^2 (0\Omega) = 0\mathrm{W}$$

- There is no power dissipated in an open circuit.

$$p_{oc} = \mathrm{i}^2 / R = (0\mathrm{A})^2 / (\infty\Omega) = 0\mathrm{W}$$

# Circuit Terminology

- Node
  - point at which 2+ elements have a common connection
    - e.g., node 1, node 2, node 3
- Path
  - a route through a network, through nodes that never repeat
    - e.g., 1→3→2, 1→2→3
- Loop
  - a path that starts & ends on the same node
    - e.g., 3→1→2→3
- Branch
  - a single path in a network; contains one element and the nodes at the 2 ends
    - e.g., 1→2, 1→3, 3→2

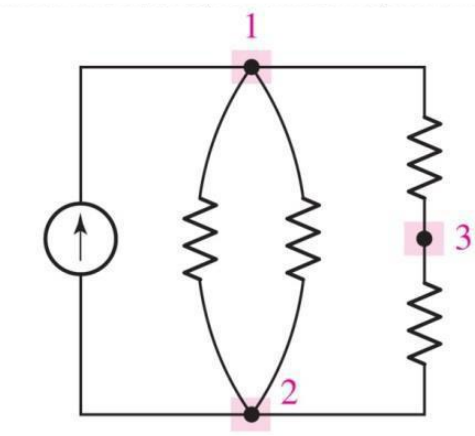


(a)

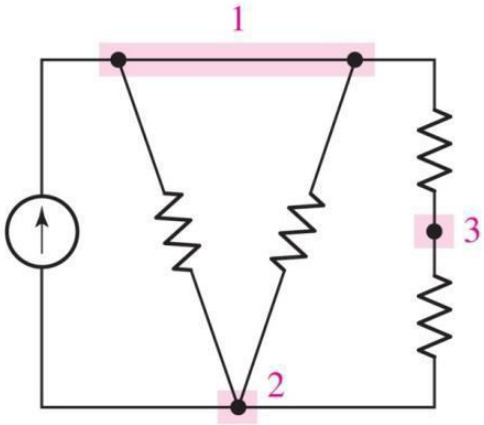


(b)

# Exercise

- For the circuit below:
  a. Count the number of circuit elements.
  b. If we move from *B* to *C* to *D*, have we formed a path and/or a loop?
  c. If we move from *E* to *D* to *C* to *B* to *E*, have we formed a path and/or a loop?

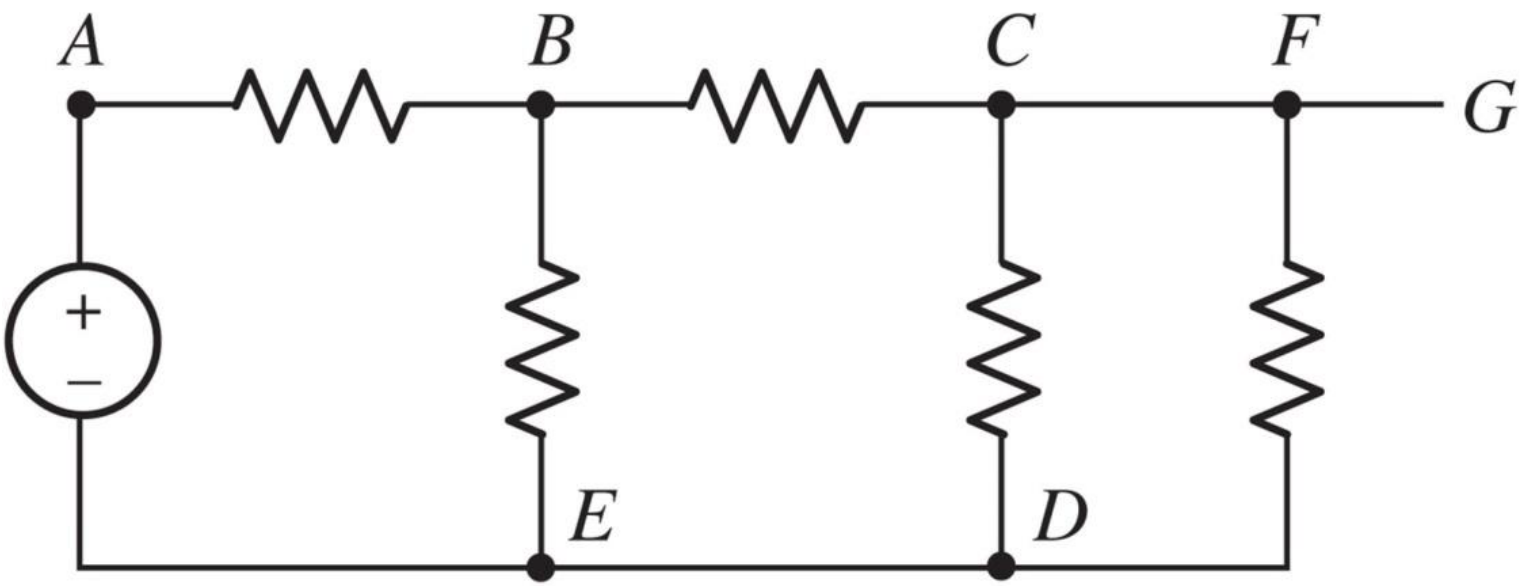

# Kirchhoff's Current Law (KCL)

- Gustav Robert Kirchhoff: German university professor, born while Ohm was experimenting
- Based upon conservation of charge
  - the algebraic sum of the charge within a system can not change.
  - the algebraic sum of the currents entering any node is zero.

$$\sum_{n=1}^{N} i_n = 0$$

Where N is the total number of branches connected to a node.

$$\sum_{\text{node}} i_{enter} = \sum_{\text{node}} i_{leave}$$

$$i_A + i_B - i_C - i_D = 0$$

$$-i_A - i_B + i_C + i_D = 0$$

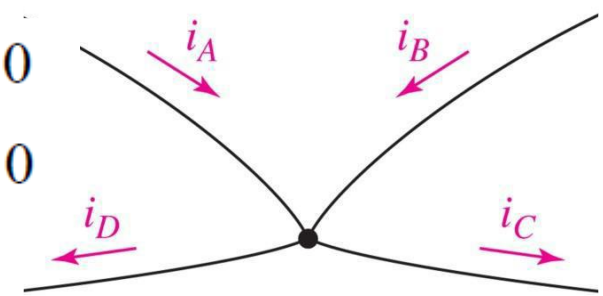

# Kirchhoff's Voltage Law (KVL)

- Based upon conservation of energy
  - the algebraic sum of voltages dropped across components around a loop is zero.
  - The energy required to move a charge from point A to point B must have a value independent of the path chosen.

$$\sum_{m=1}^{M} v = 0$$

Where M is the total number of branches in the loop.

$$\sum v_{drops} = \sum v_{rises}$$

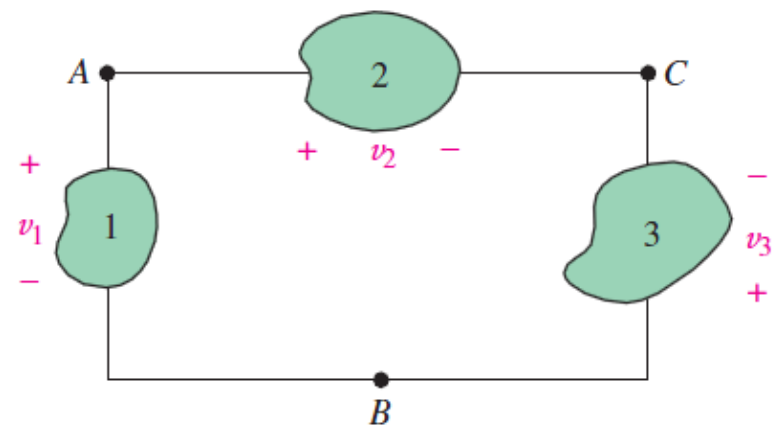


$$-v_1 + v_2 - v_3 = 0$$

$$v_1 - v_2 + v_3 = 0$$

# Example-01

- For the circuit, compute the current through $R_3$ if it is known that the voltage source supplies a current of 3 A.
- Use KCL

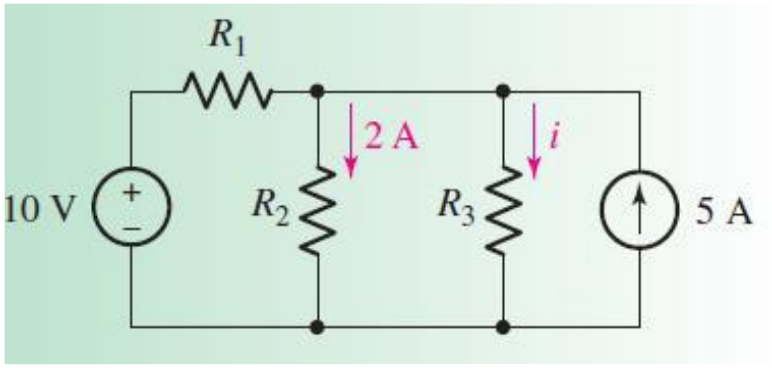


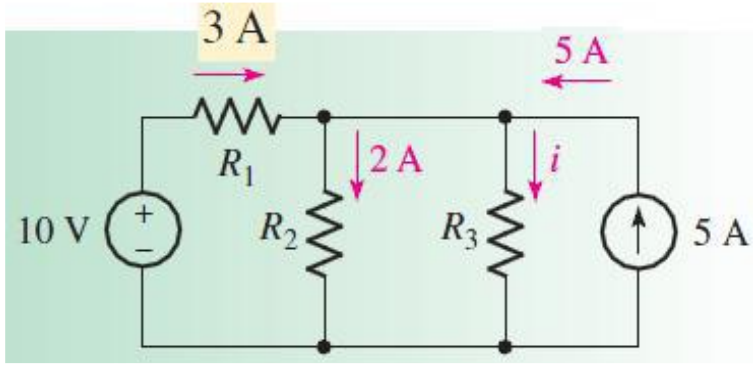


$$3 - 2 - i + 5 = 0$$

$$i = 3 - 2 + 5 = 6 \text{ A}$$

# Example-02

- Referring to the single node below, compute:
  - *a.* $i_B$, given $i_A = 1$ A, $i_D = -2$ A, $i_C = 3$ A, and $i_E = 4$ A
  - *b.* $i_E$, given $i_A = -1$ A, $i_B = -1$ A, $i_C = -1$ A, and $i_D = -1$ A

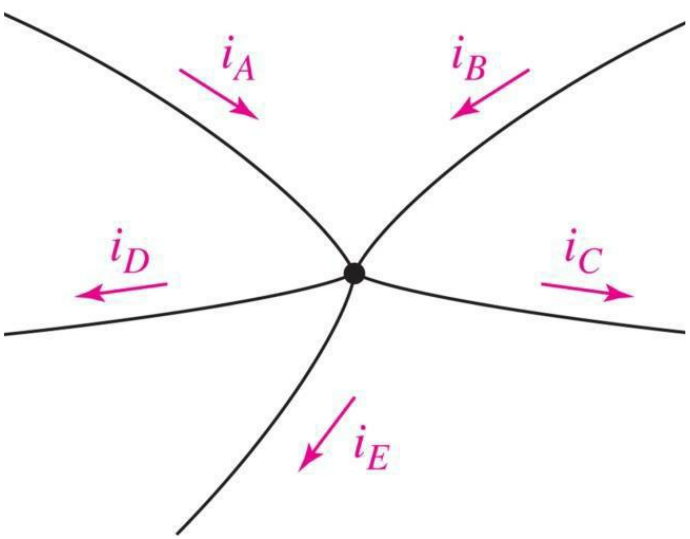


- Use KCL

$$i_A + i_B - i_C - i_D - i_E = 0$$

*a.* $i_B = -i_A + i_C + i_D + i_E$

$$i_B = -1 + 3 - 2 + 4 = 4 \text{ A}$$

*b.* $i_E = i_A + i_B - i_C - i_D$

$$i_E = -1 - 1 + 1 + 1 = 0 \text{ A}$$

# Example-03

- Determine I, the current flowing out of the voltage source.

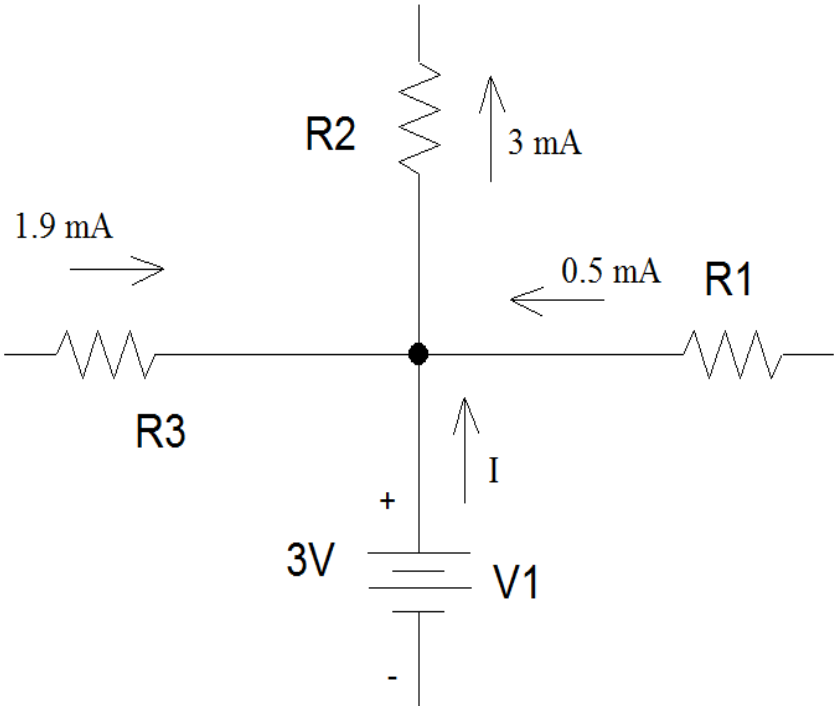


– Use KCL
  - 1.9 mA + 0.5 mA + I are entering the node.
  - 3 mA is leaving the node.

$$1.9mA + 0.5mA + I = 3mA$$

$$I = 3mA - (1.9mA + 0.5mA)$$

$$I = 0.6mA$$

V1 is generating power.

# Example-04

- Suppose the current through R2 was entering the node and the current through R3 was leaving the node.

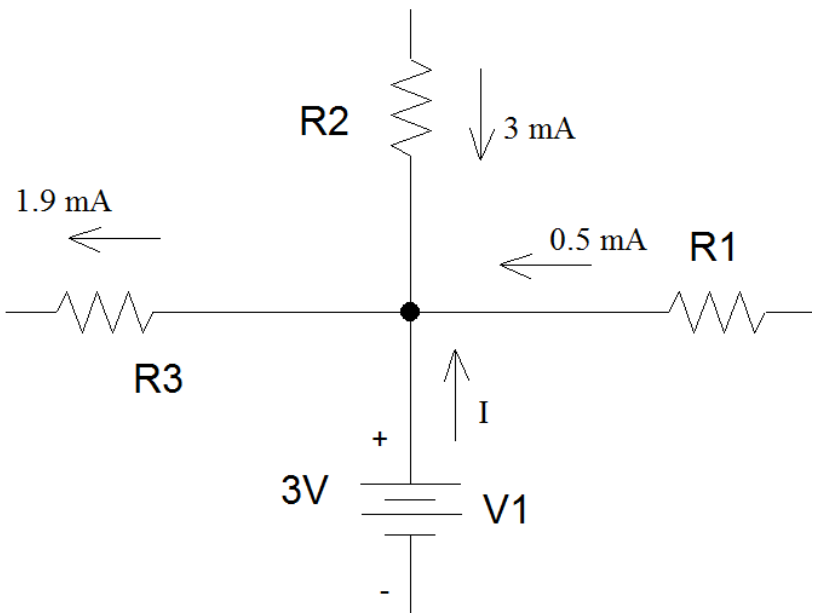


– Use KCL
  - 3 mA + 0.5 mA + I are entering the node.
  - 1.9 mA is leaving the node.

$$3mA + 0.5mA + I = 1.9mA$$

$$I = 1.9mA - (3mA + 0.5mA)$$

$$I = -1.6mA$$

V1 is dissipating power.

# Example-05

- If voltage drops are given instead of currents,
  - you need to apply Ohm's Law to determine the current flowing through each of the resistors before you can find the current flowing out of the voltage supply.

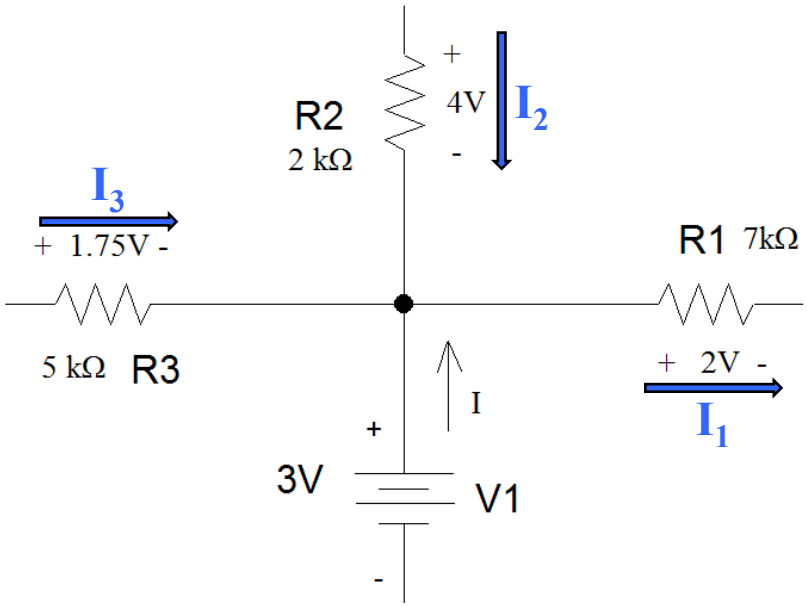


$$I_1 = 2V / 7k\Omega = 0.286mA$$
$$I_2 = 4V / 2k\Omega = 2mA$$
$$I_3 = 1.75V / 5k\Omega = 0.35mA$$

- $I_1$ is leaving the node.
- $I_2$ is entering the node.
- $I_3$ is entering the node.
- I is entering the node.

$$I_2 + I_3 + I = I_1$$
$$2mA + 0.35mA + I = 0.286mA$$
$$I = 0.286mA - 2.35mA = -2.06mA$$

# Example-06

- For each of the circuits in the figure below, determine the voltage $v_x$ and the current $i_x$.

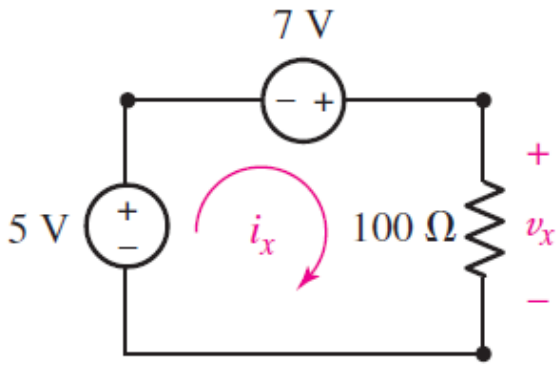


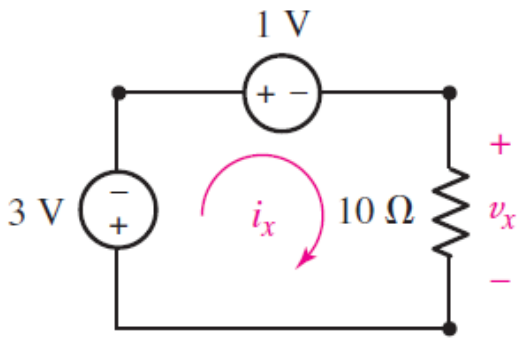


– Applying KVL clockwise around the loop and Ohm's law

$$-5 - 7 + v_x = 0$$

$$v_x = 12 \text{ V}$$

$$i_x = \frac{v_x}{100} = \frac{12}{100} \text{ A} = 120 \text{ mA}$$

$$+3 + 1 + v_x = 0$$

$$v_x = -4 \text{ V}$$

$$i_x = \frac{v_x}{10} = -400 \text{ mA}$$

# Example-07

- For the circuit below, determine

a. $v_{R2}$

b. $v_x$

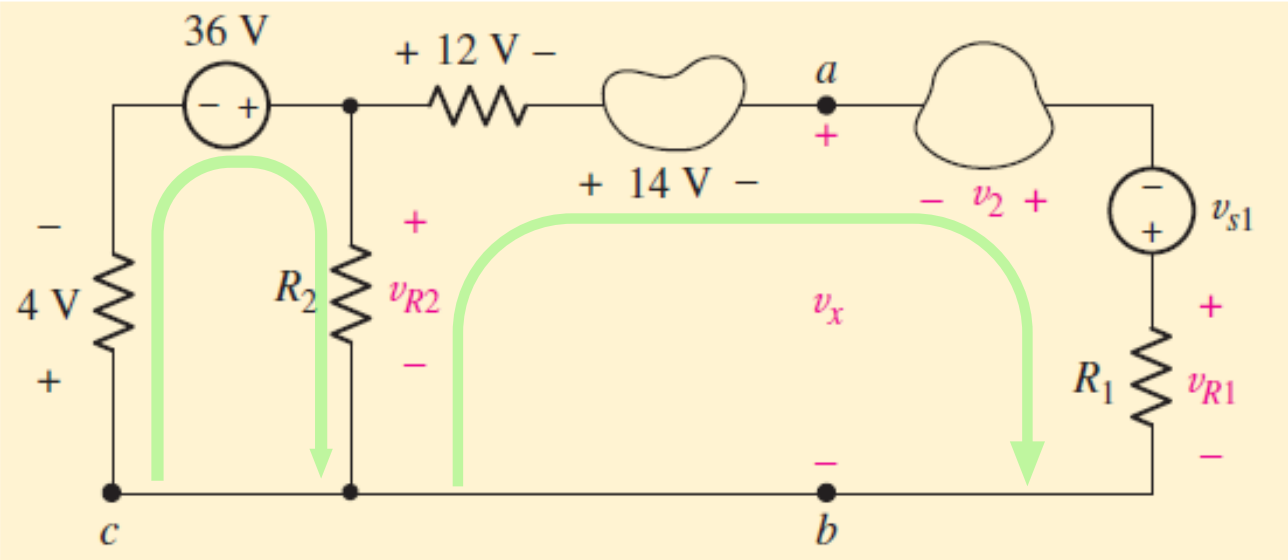


a. $4 - 36 + v_{R2} = 0$ $\qquad$ $v_{R2} = 32\ \text{V}$

b. $-32 + 12 + 14 + v_x = 0$ $\qquad$ $v_x = 6\ \text{V}$

# Example-08

- For the circuit below, determine

a. $v_{R2}$ b. $v_x$ if $v_{R1} = 1$ V.

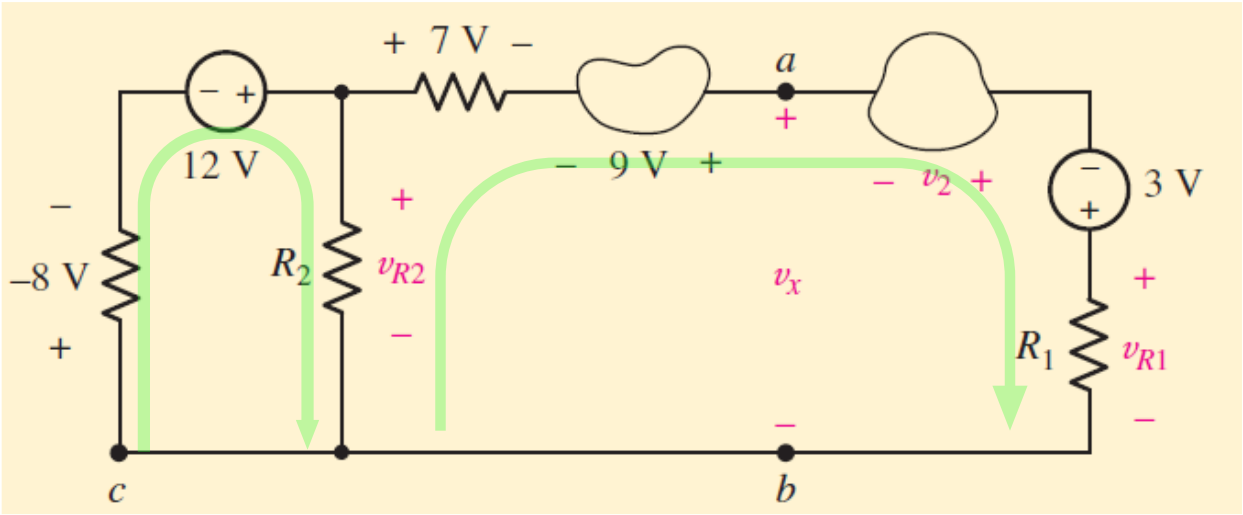


a. KVL yields $-8 - 12 + v_{R2} = 0$ $v_{R2} = 20$ V

b. KVL yields $-20 + 7 - 9 - v_2 - 3 + v_{R1}$

where $v_{R1} = 1$ V. Thus, $v_2 = -24$ V.

# Example-09

- For the circuit below, determine $v_x$

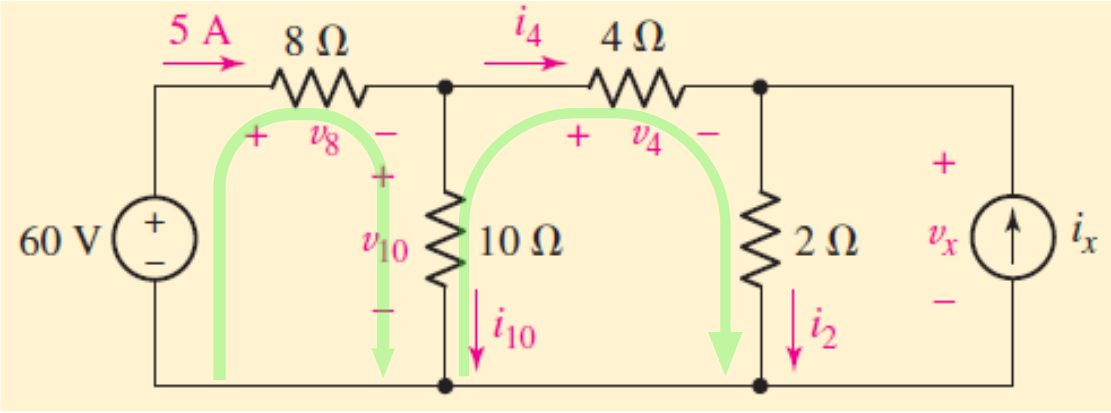


$$-60 + v_8 + v_{10} = 0$$

$$v_{10} = 0 + 60 - 40 = 20\text{ V}$$

$$-v_{10} + v_4 + v_x = 0$$

$$v_x = 20 - v_4$$

$$i_4 = 5 - i_{10} = 5 - \frac{v_{10}}{10} = 5 - \frac{20}{10} = 3$$

$$v_4 = (4)(3) = 12\text{ V}$$

$$v_x = 20 - 12 = 8\text{ V}$$

# Example-10…

- Find the voltage across R1.
  - Note that the polarity of the voltage has been assigned in the circuit schematic.

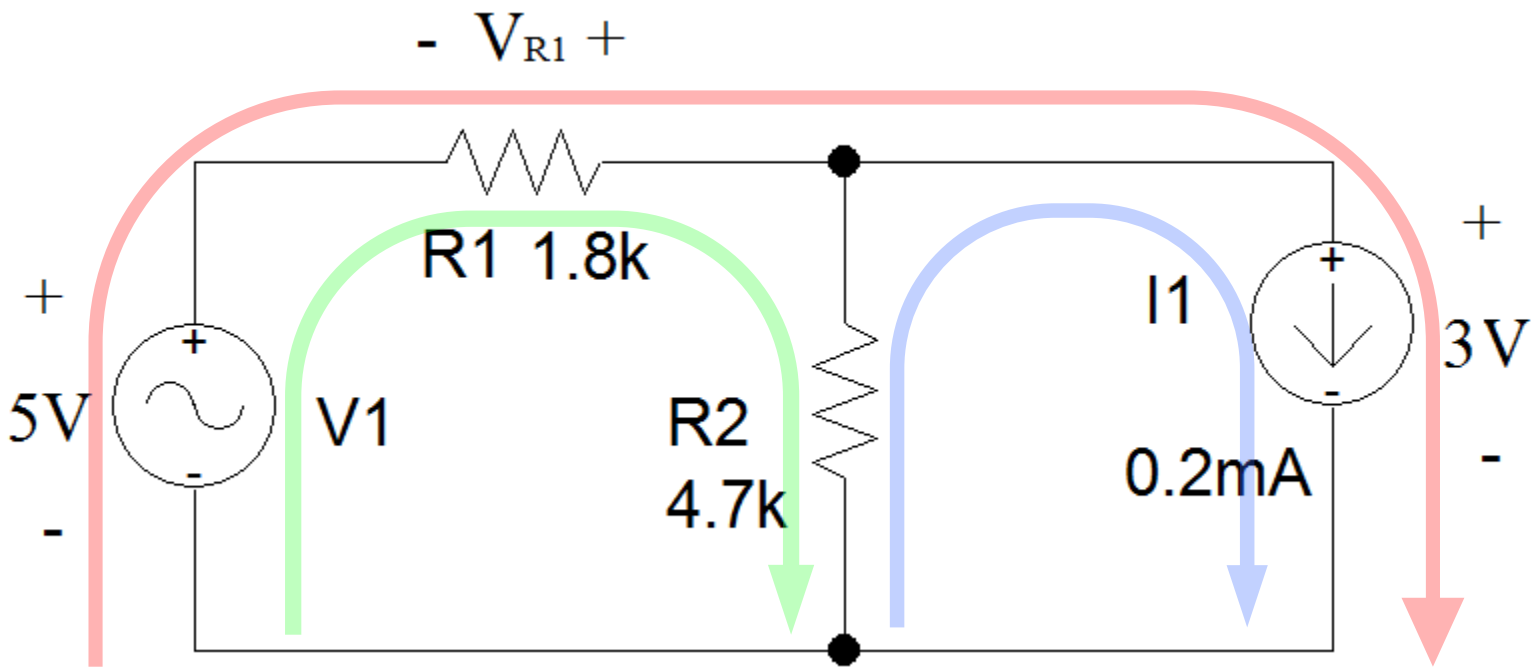


– First, define a loop that include R1.

# …Example-10…

- If the red loop is considered

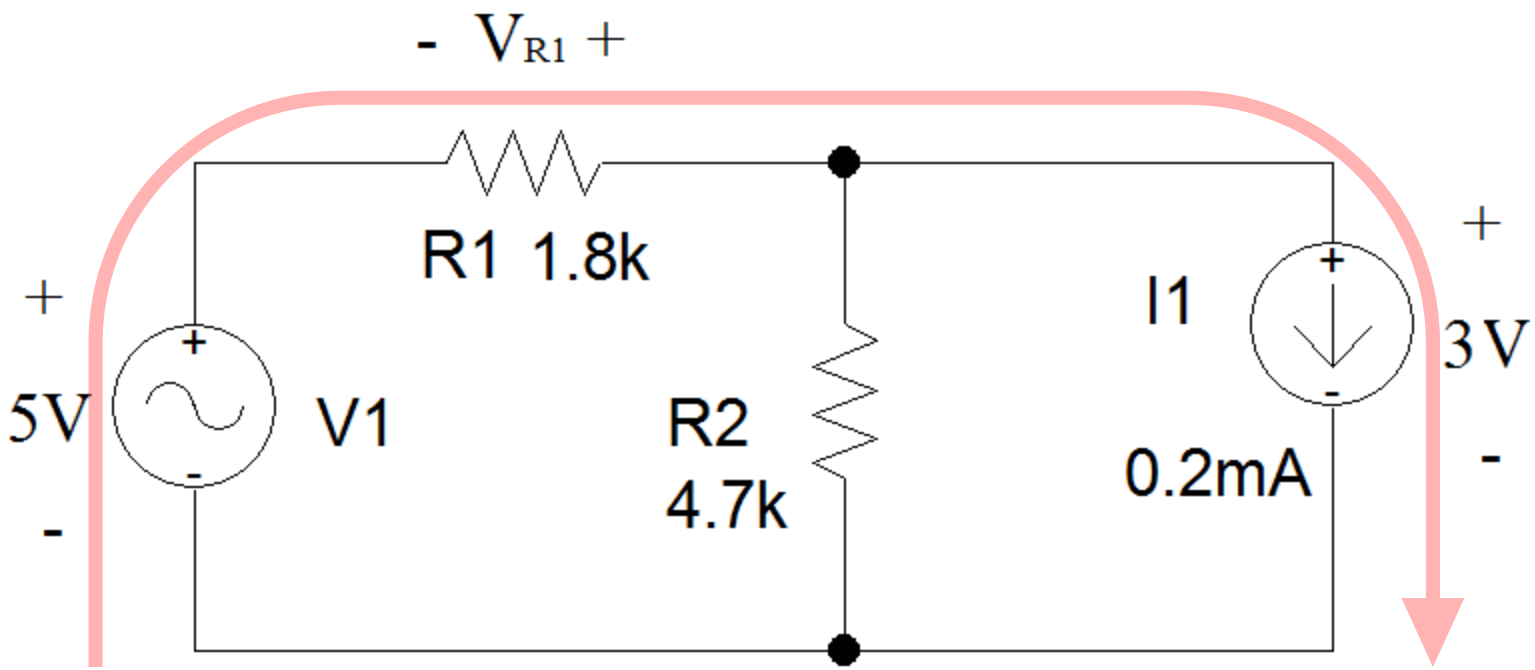


– By convention, voltage drops are added and voltage rises are subtracted in KVL.

$$-5\ \text{V} - V_{R1} + 3\ \text{V} = 0 \qquad V_{R1} = 2\ \text{V}$$

# …Example-10

- Suppose you chose the green loop instead.
  - Since R2 is in parallel with I1, the voltage drop across R2 is also 3V.

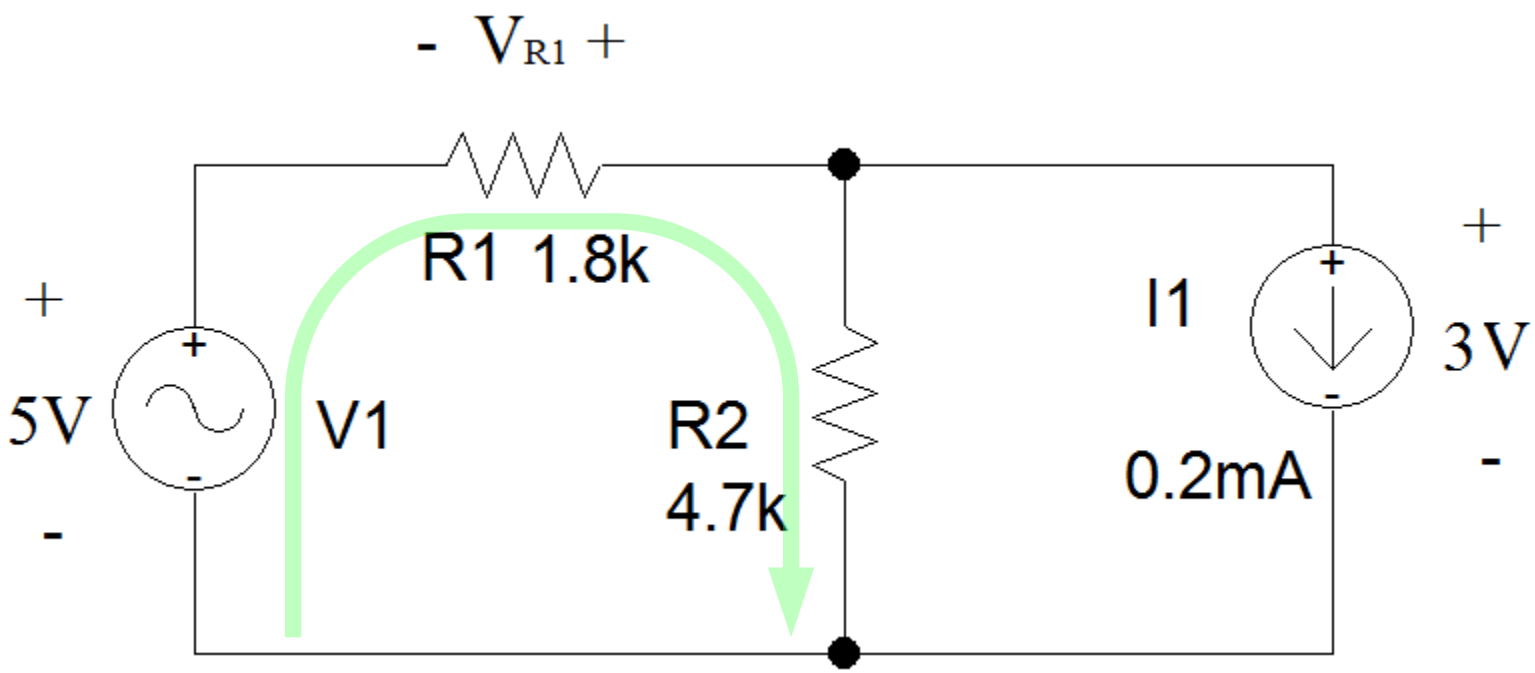


$$-5\ \text{V} - V_{R1} + 3\ \text{V} = 0 \qquad V_{R1} = 2\ \text{V}$$

# Example-11…

- Find the voltage across R2 and the current flowing through it.

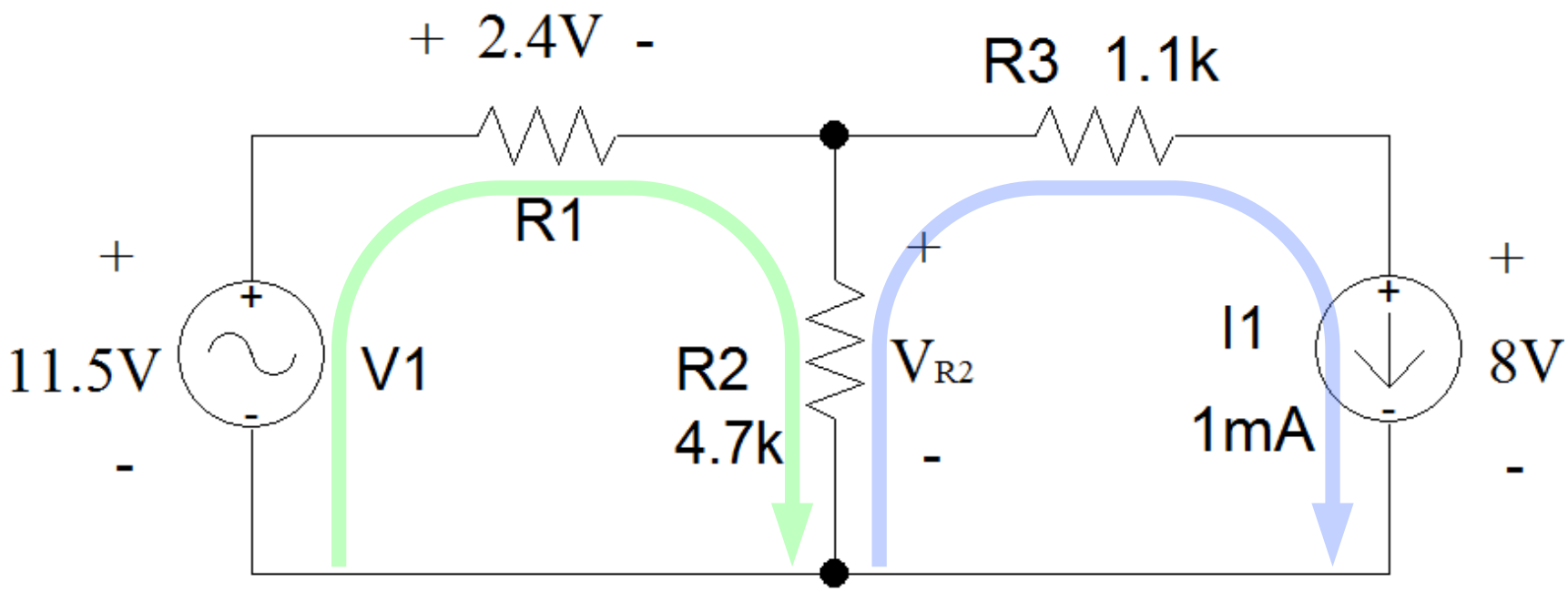


– First, draw a loop that includes R2.

# …Example-11…

- If the green loop is used:

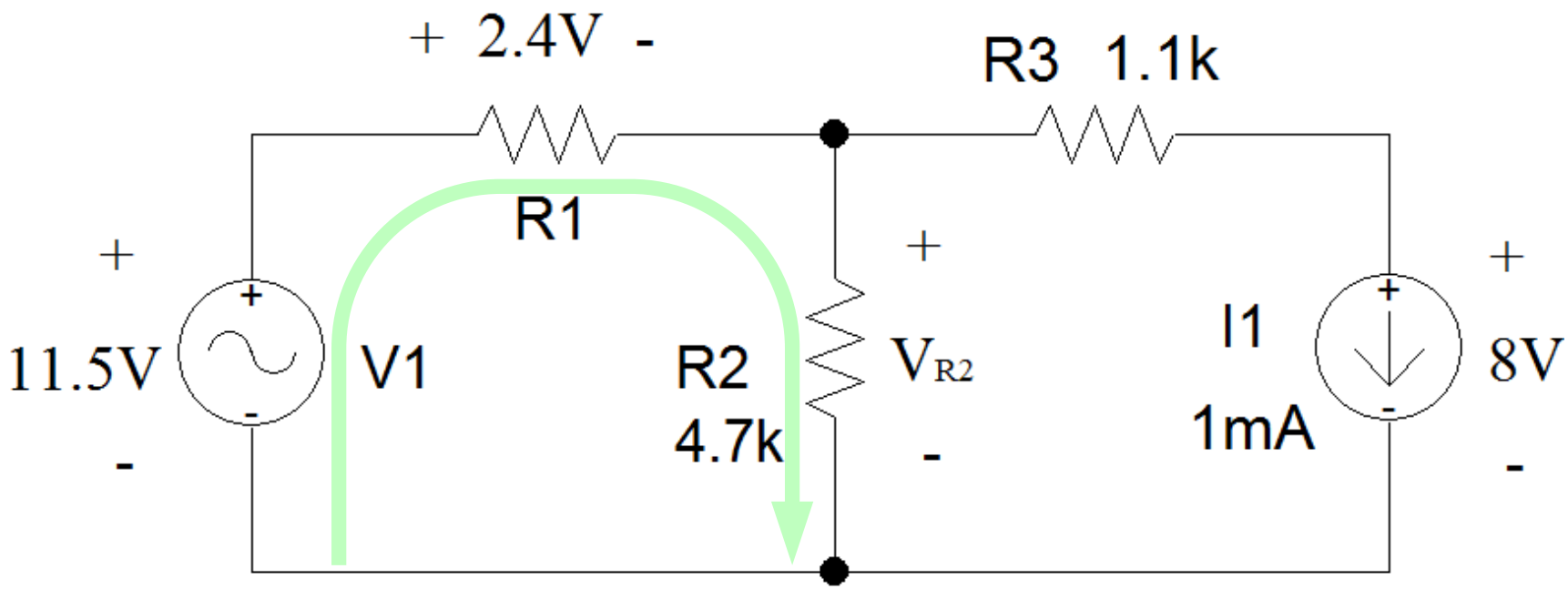


$-11.5\ V + 2.4\ V + V_{R2} = 0$ $\qquad$ $V_{R2} = 9.1\ V$

# …Example-11…

- If the blue loop is used:

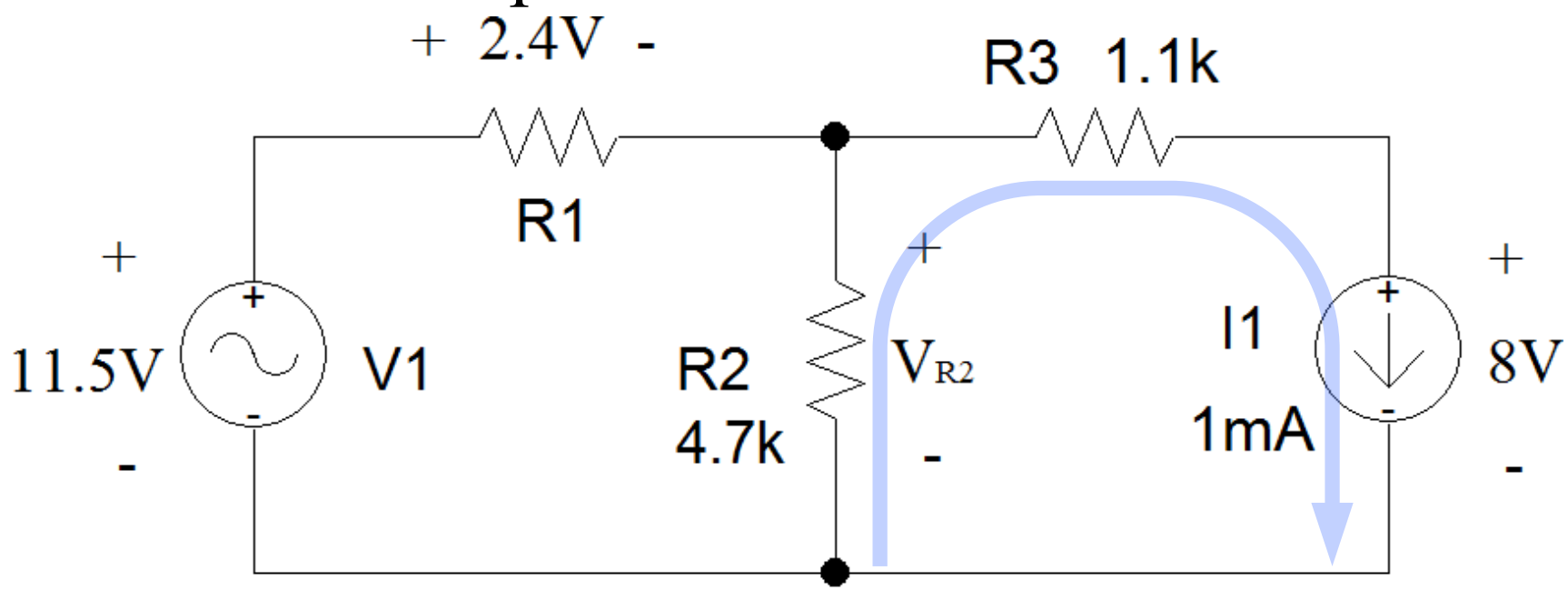


- First, find the voltage drop across R3

$1\ \text{mA} \times 1.1\ \text{k}\Omega = 1\times10^{-3}\ \text{A} \times 1.1\times10^{3}\ \Omega = 1.1\ \text{V}$

$1.1\ \text{V} + 8\ \text{V} - V_{R2} = 0$ $\qquad$ $V_{R2} = 9.1\ \text{V}$

# …Example-11

– Once the voltage across R2 is known, Ohm's Law is applied to determine the current.

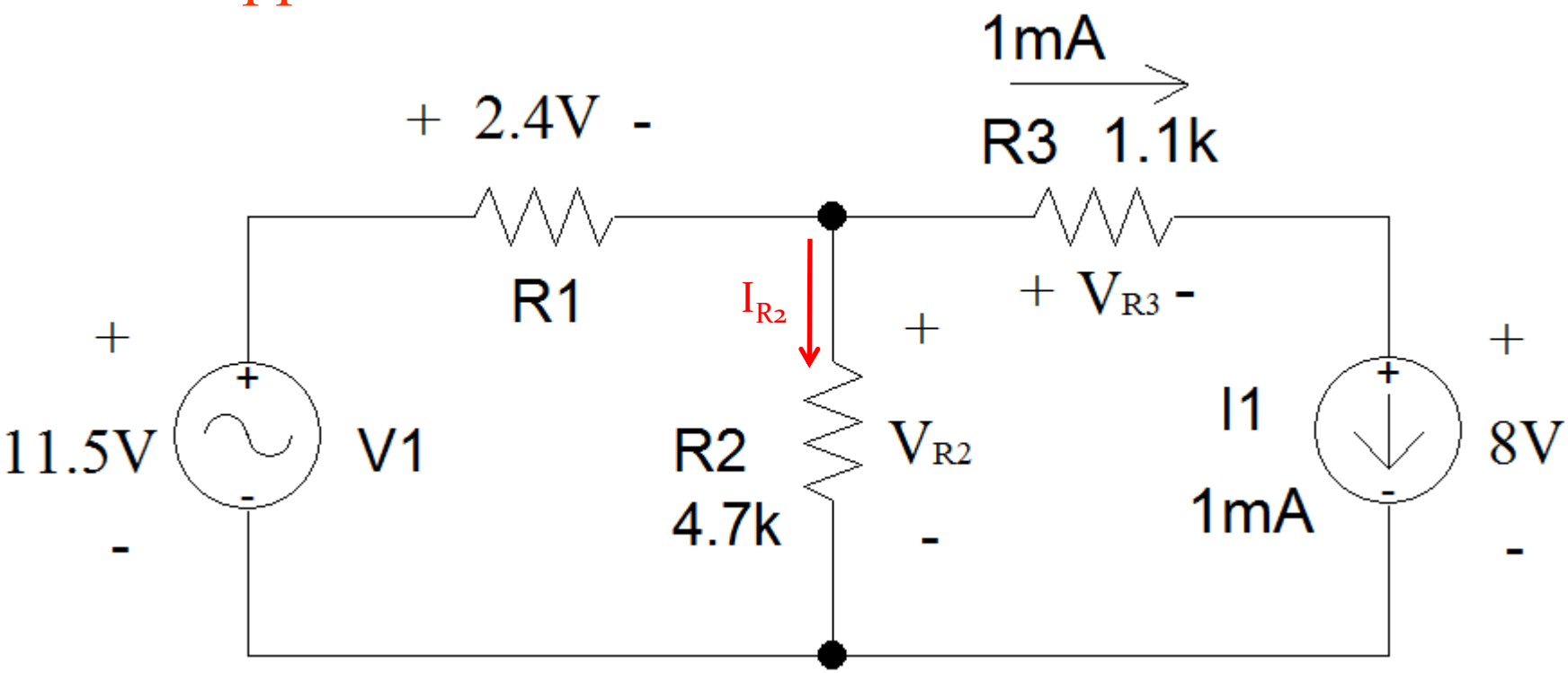


$I_{R2} = 9.1\ V / 4.7\ k\Omega = 9.1\ V / (4.7\times10^{3}\ \Omega)$

$I_{R2} = 1.94\times10^{-3}\ A = 1.94\ mA$

# The Single-Loop Circuit

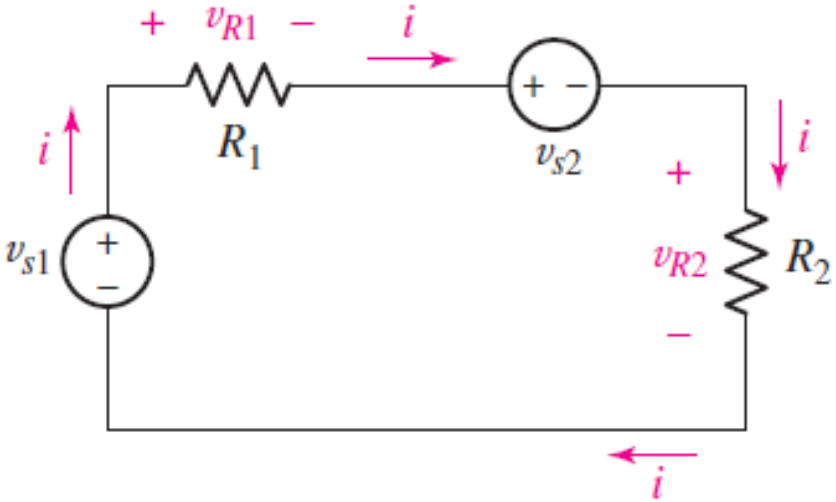


$$-v_{s1} + v_{R1} + v_{s2} + v_{R2} = 0$$

$$v_{R1} = R_1 i \quad \text{and} \quad v_{R2} = R_2 i$$

$$-v_{s1} + R_1 i + v_{s2} + R_2 i = 0$$

$$i = \frac{v_{s1} - v_{s2}}{R_1 + R_2}$$

- First step in the analysis is the assumption of reference directions for the unknown currents.
- Second step in the analysis is a choice of the voltage reference for each of the two resistors.
- The third step is the application of Kirchhoff's voltage law to the only closed path.

# Conservation of Energy

- The sum of the absorbed power for each element of a circuit is zero.

$$\sum_{\text{all elements}} p_{\text{absorbed}} = 0$$

- The sum of the absorbed power equals the sum of the supplied power

$$\sum p_{\text{absorbed}} = \sum p_{\text{supplied}}$$

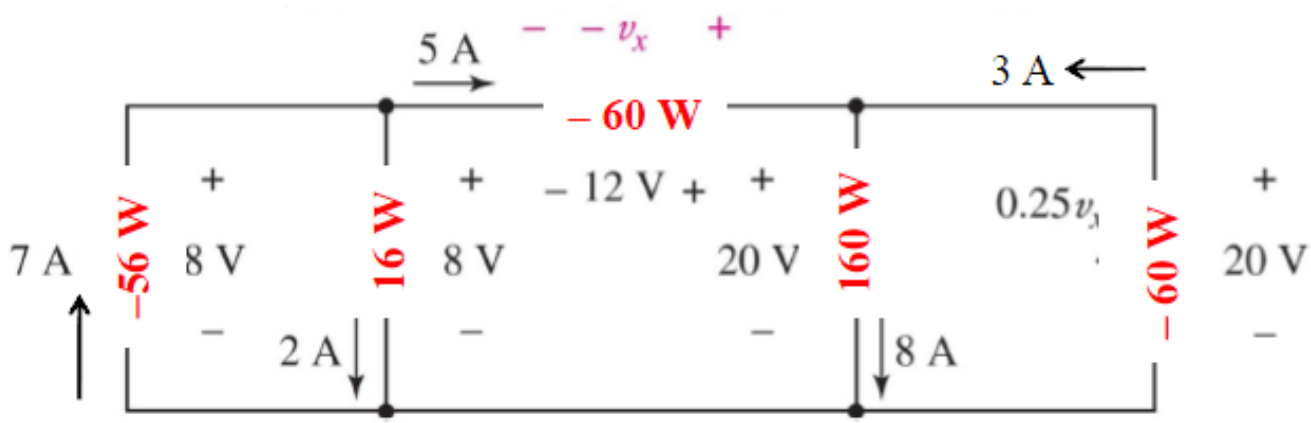


$$\sum p_{\text{abs}} = -56 + 16 - 60 + 160 - 60 = -176\text{ W} + 176\text{ W} = 0$$

# Example-01

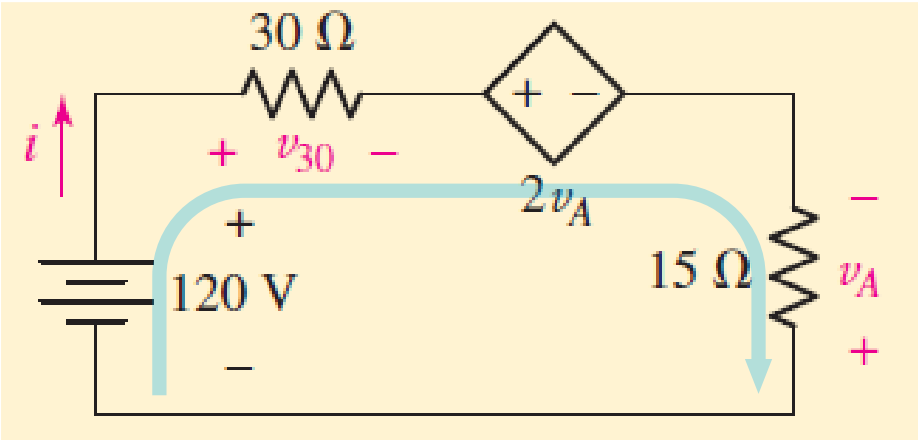


- Compute the power absorbed in each element for the circuit shown in the Figure.

$$-120 + v_{30} + 2v_A - v_A = 0$$

$$v_{30} = 30i \quad \text{and} \quad v_A = -15i$$

$$-120 + 30i - 30i + 15i = 0$$

$$i = 8 \text{ A}$$

– power absorbed by each element:

$$p_{120\text{V}} = (120)(-8) = -960 \text{ W}$$

$$p_{30\Omega} = (8)^2(30) = 1920 \text{ W}$$

$$p_{\text{dep}} = (2v_A)(8) = 2[(-15)(8)](8) = -1920 \text{ W}$$

$$p_{15\Omega} = (8)^2(15) = 960 \text{ W}$$

# Example-02

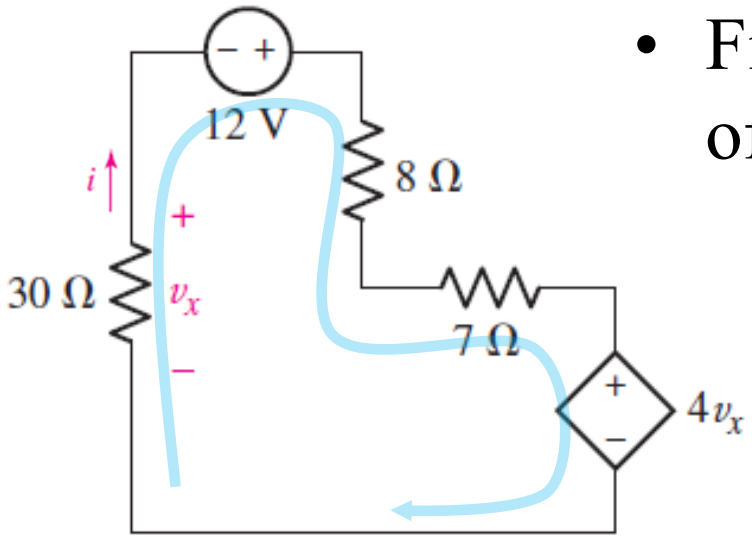


- Find the power absorbed by each of the five elements in the circuit.
  - power absorbed by each element:

$$P_{abs}\big|_{30\Omega} = \frac{24^2}{5} \times \frac{1}{30} = \underline{768\text{ mW}}$$

$$P_{abs}\big|_{12v} = +\frac{4}{25} \times 12 = \underline{1.92\text{ W}}$$

$$P_{abs}\big|_{8\Omega} = -\frac{4}{25}^2 \times 8 = \underline{204.8\text{ mW}}$$

$$P_{abs}\big|_{7\Omega} = -\frac{4}{25}^2 \times 7 = \underline{179.2\text{ mW}}$$

$$P_{abs}\big|_{4v_x} = -\frac{4}{25} \times 4v_x = \frac{-4}{25} \times 4 \times \frac{24}{5} = \underline{-3.072\text{ W}}$$

$$-v_x - 12 + (8+7)i + 4v_x = 0$$

$$i = {}^{-v_x}\!/_{30} \qquad v_x = {}^{24}\!/_{5}\text{ V}$$

$$i = -{}^{4}\!/_{25}\text{ A}$$

(Check: 768 + 1920 + 204.8 + 179.2 – 3072 = 0 mW)

# The Single-Node-Pair Circuit

- KVL forces us to recognize that the voltage across each branch is the same as that across any other branch.
- Elements in a circuit having a common voltage across them are said to be connected in parallel.

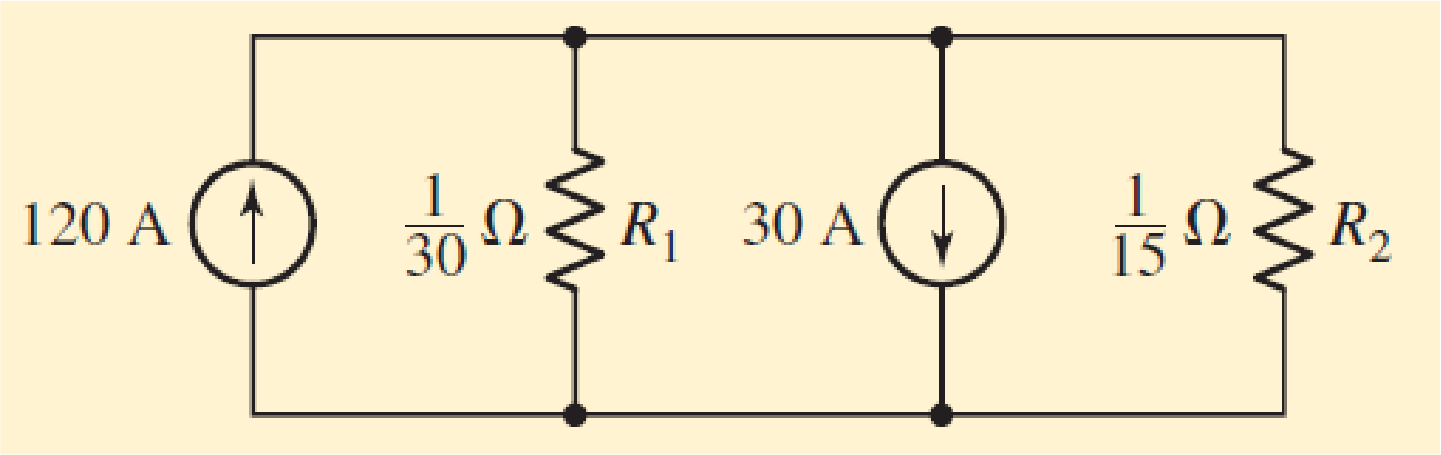

# Example-03

- Find the voltage, current, and power associated with each element in the following circuit.

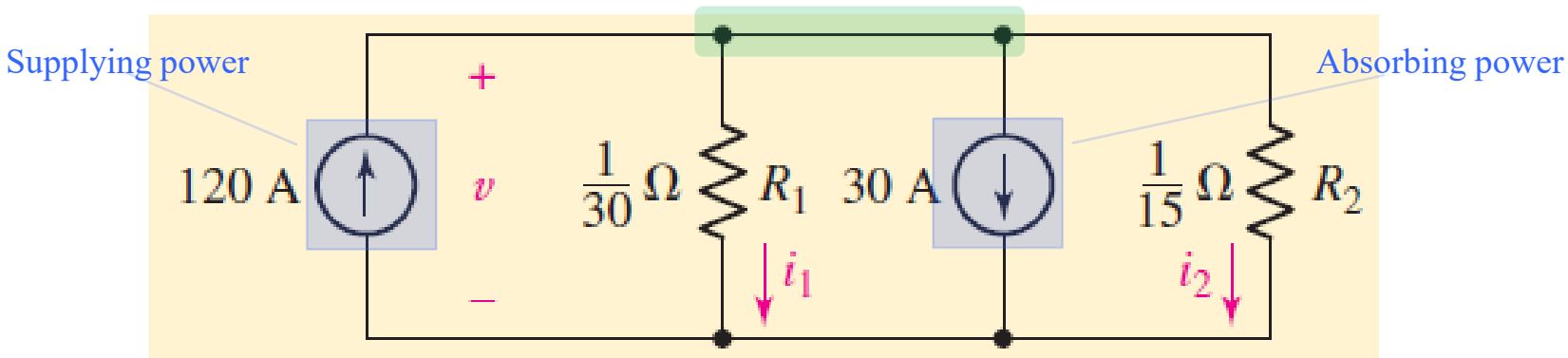


$$-120 + i_1 + 30 + i_2 = 0$$

$$i_1 = 30v \quad \text{and} \quad i_2 = 15v$$

$$-120 + 30v + 30 + 15v = 0$$

$$v = 2 \text{ V}$$

$$i_1 = 60 \text{ A} \quad \text{and} \quad i_2 = 30 \text{ A}$$

– power absorbed by each element:

$$p_{R1} = 30(2)^2 = 120 \text{ W}$$

$$p_{R2} = 15(2)^2 = 60 \text{ W}$$

$$p_{120\text{A}} = 120(-2) = -240 \text{ W}$$

$$p_{30\text{A}} = 30(2) = 60 \text{ W}$$

# Example-04

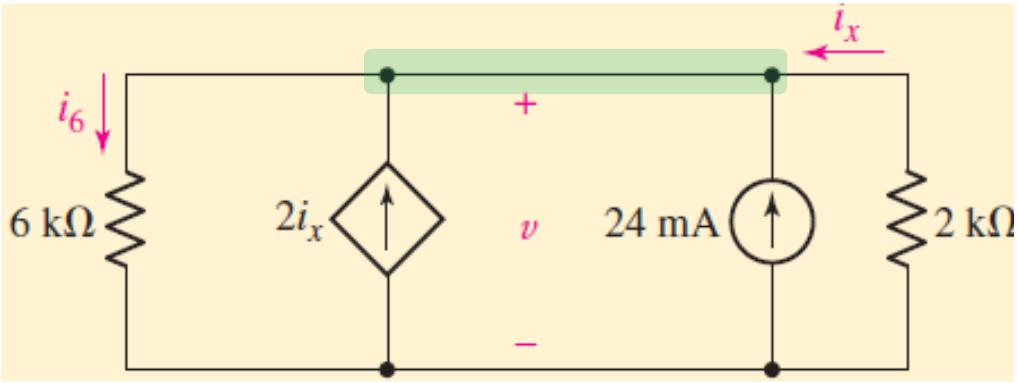


- Determine the value of $v$ and the power absorbed by the independent current source in the circuit.

$$i_6 - 2i_x - 0.024 - i_x = 0$$

$$i_6 = \frac{v}{6000} \quad \text{and} \quad i_x = \frac{-v}{2000}$$

$$\frac{v}{6000} - 2\left(\frac{-v}{2000}\right) - 0.024 - \left(\frac{-v}{2000}\right) = 0$$

$$v = (600)(0.024) = 14.4 \text{ V}$$

$$p_{24} = -14.4(0.024) = -0.3456 \text{ W } (-345.6 \text{ mW})$$

- Actually 345.6 mW is supplied

# Example-05

- For the single-node-pair circuit, find $i_A$ , $i_B$ and $i_C$ .

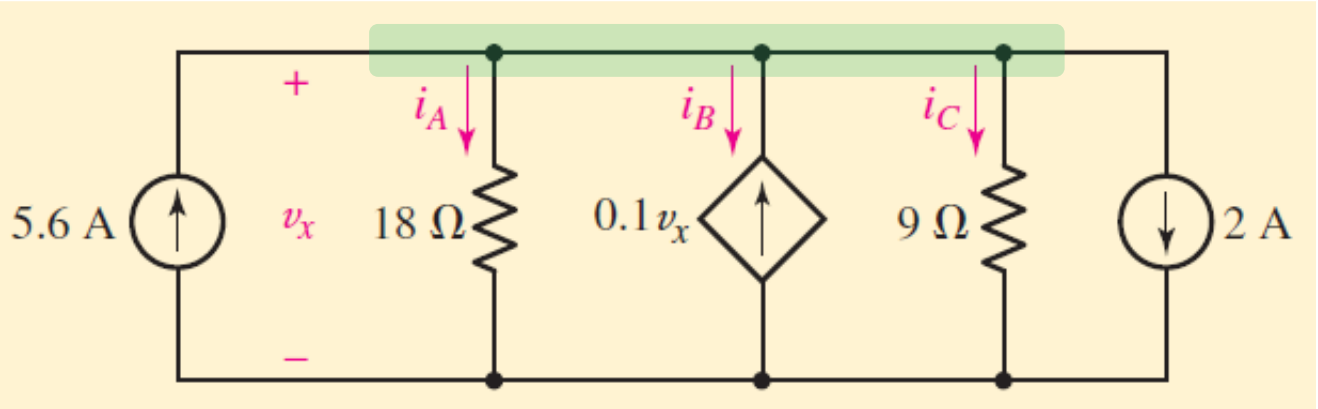


$$5.6 - \frac{v_x}{18} + 0.1v_x - \frac{v_x}{9} - 2 = 0 \qquad v_x = 54 \text{ V}.$$

$$i_A = \frac{v_x}{18} = \underline{3 \text{ A}}, \quad i_B = -0.1v_x = \underline{-5.4 \text{ A}}, \quad i_C = \frac{v_x}{9} = \underline{6 \text{ A}}$$

$$5.6 = i_A + i_B + i_C + 2 = 3 - 5.4 + 6 + 2 = 5.6$$

# Series Circuits

- Series
  - all elements in a circuit (loop) that carry the same current

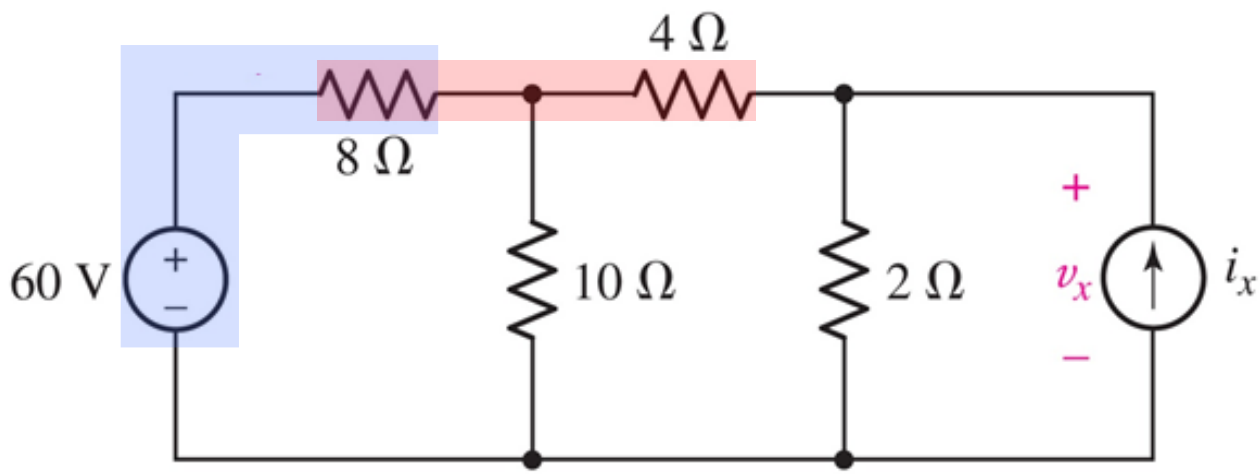


  - The 60 V source and the 8 Ω resistor are in series.
  - The 8 Ω resistor and 4 Ω resistor are not in series.

# Series Circuits

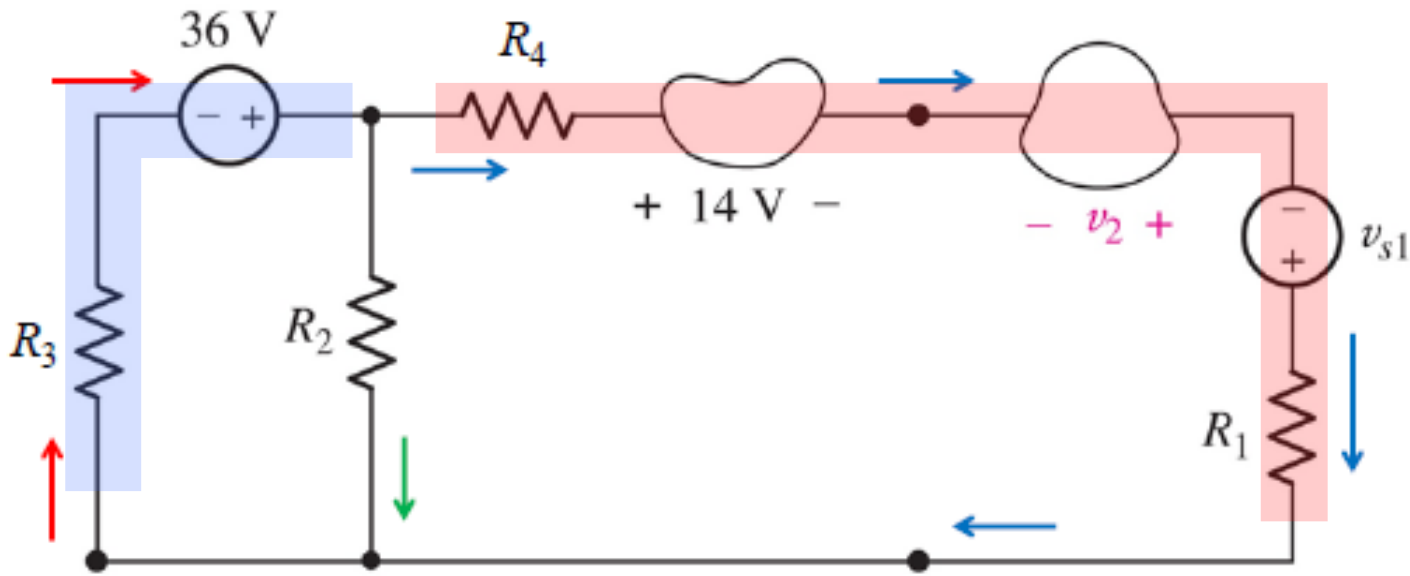


- $R_3$ is in series with the 36 V source.
- $R_4$, the 14 V element, the $v_2$ element, the $v_{s1}$ source, and $R_1$ are in series.
- No element is in series with $R_2$.

# Parallel Circuits

- Parallel
  - all elements in a circuit that have a common voltage across them (elements that share the same 2 nodes)

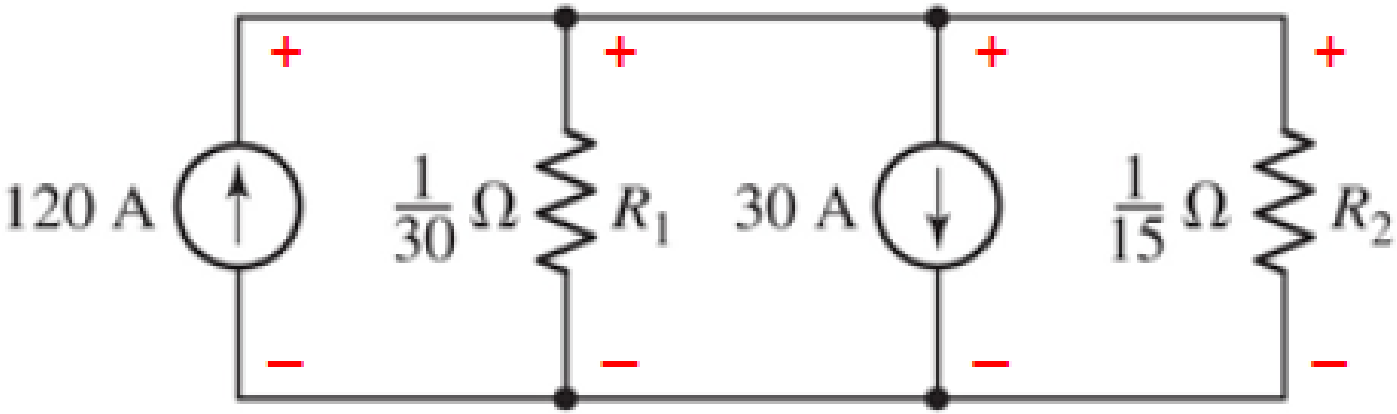


  - The 120 A source, 1/30 Ω resistor, 30 A source, and 1/15 Ω resistor are in parallel.

# Parallel Circuits

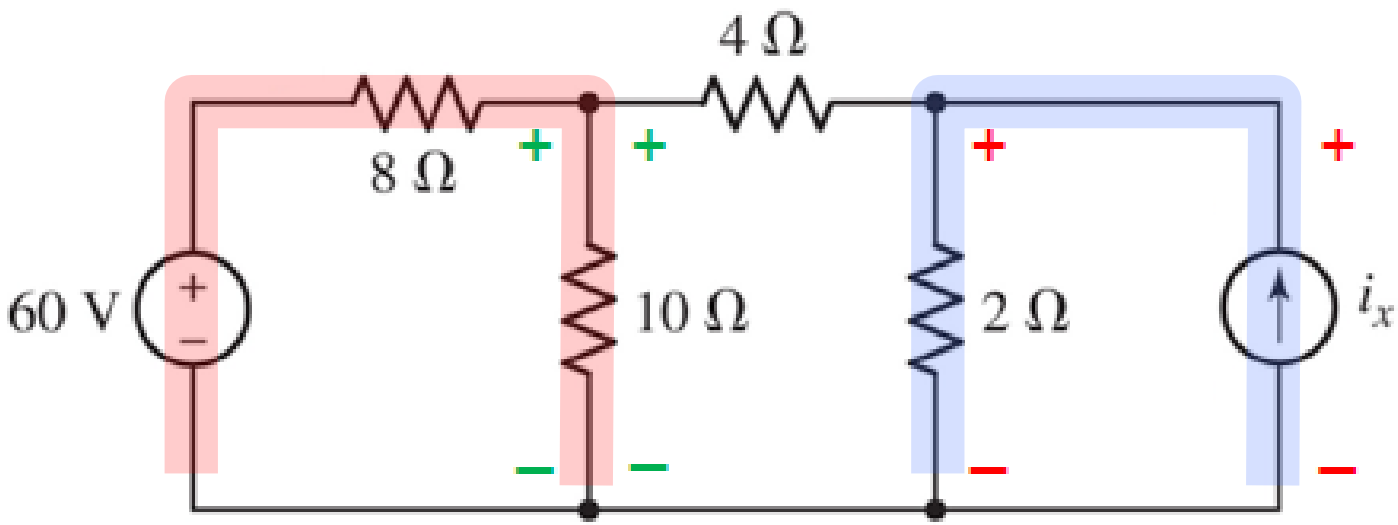


- The current source and the 2 Ω resistor are in parallel.
  - No other single elements are in parallel with each other.
- The 60 V source and 8 Ω resistor branch is in parallel with the 10 Ω resistor.

# Example-06

- In the following circuit;
  a. which individual elements are in series/in parallel?
  b. which groups of elements are in series/in parallel?

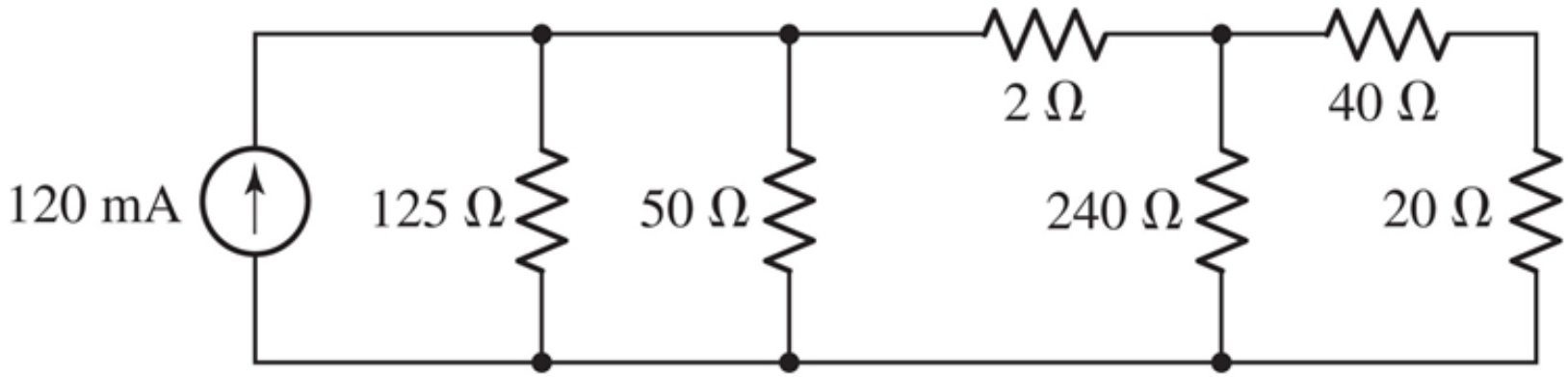

# Example-07

- In the following circuit;
  a. which individual elements are in series/in parallel?
  b. which groups of elements are in series/in parallel?

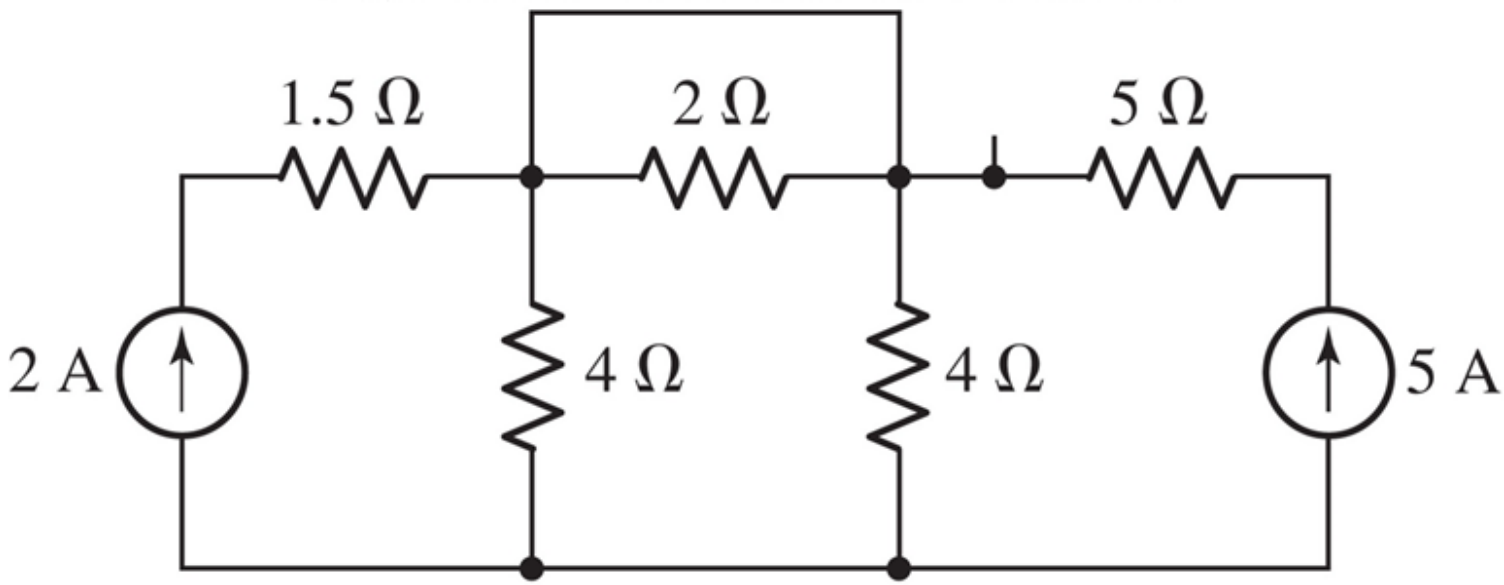

# Example-08

- In the following circuit;

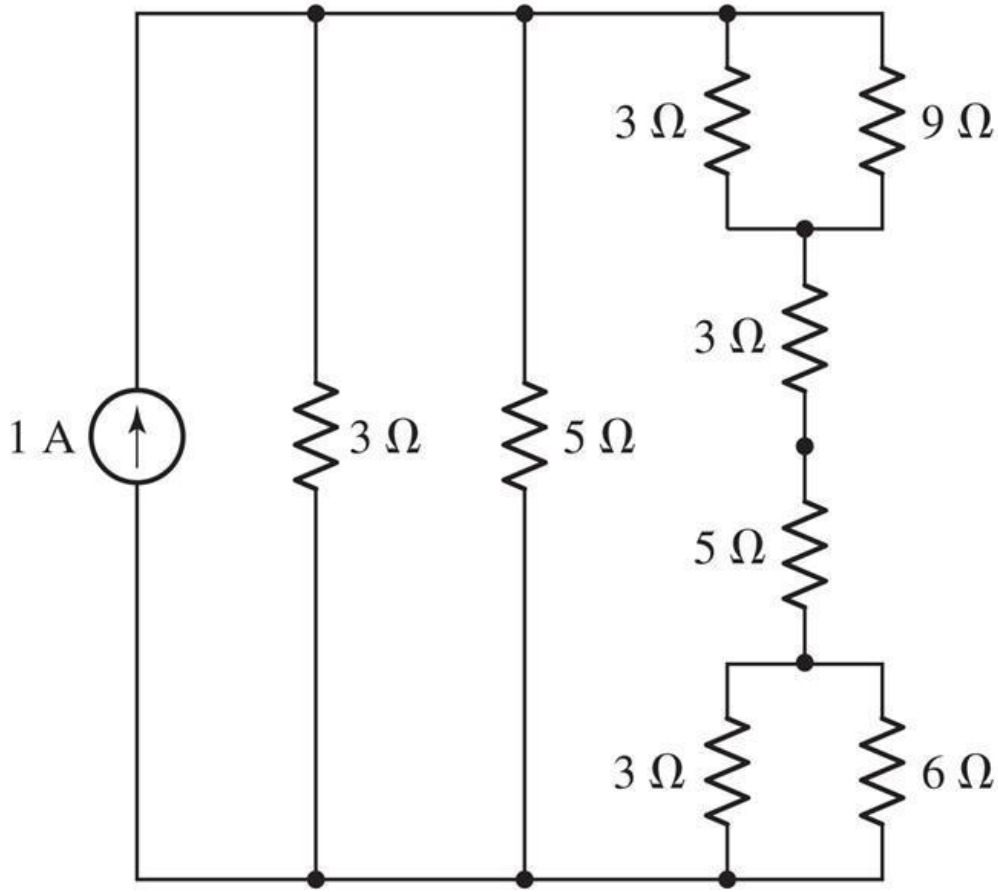


a. which individual elements are in series/in parallel?

b. which groups of elements are in series/in parallel?

# Voltage Sources in Series

- can replace voltage sources in series with a single equivalent source

$$v_{\text{equivalent}}^{\text{series}} = \sum_{n=1}^{N} v_n$$

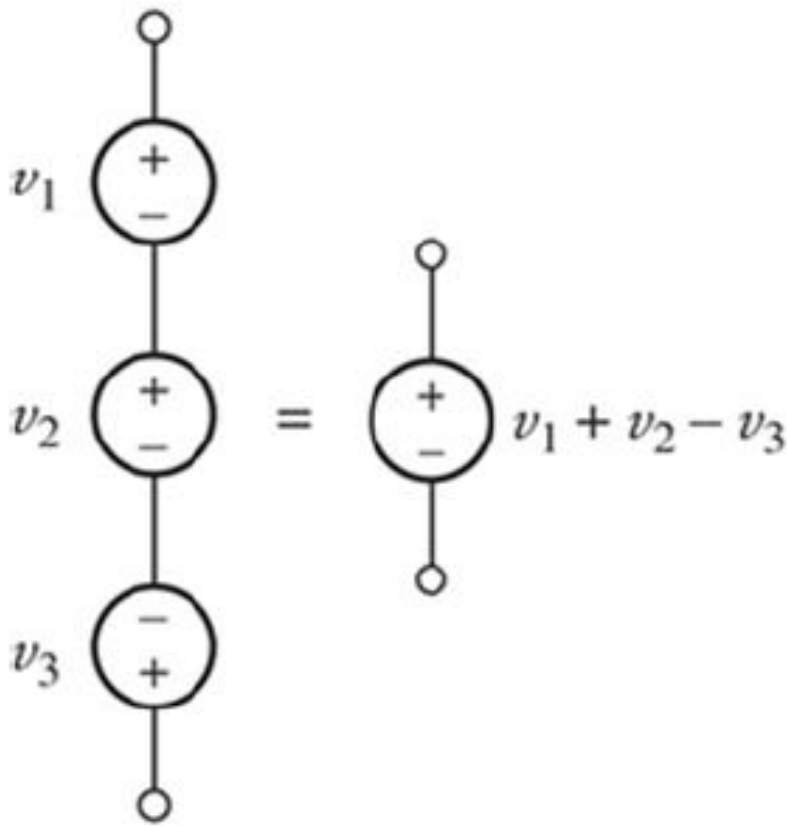


- all other voltage, current, & power relationships in the circuit remain unchanged
- might greatly simplify analysis of an otherwise complicated circuit

# Voltage Sources in Series

- The connection of batteries in series to obtain a higher voltage is common in much of today's portable electronic equipment.

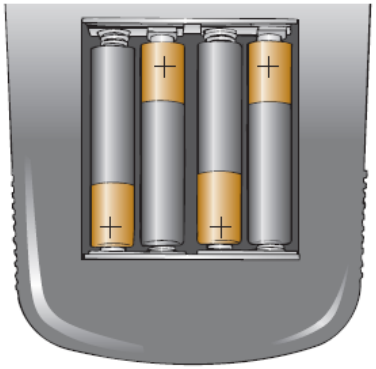

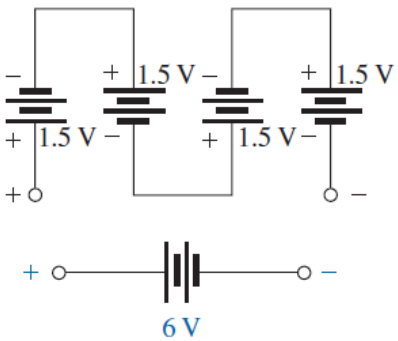


- Four 1.5V AAA batteries have been connected in series to obtain a source voltage of 6V.
  - The voltage has increased, but the maximum current for each AAA battery and for the 6V supply is the same.
  - The power available has increased by a factor of 4 due to the increase in terminal voltage.

# Example-09

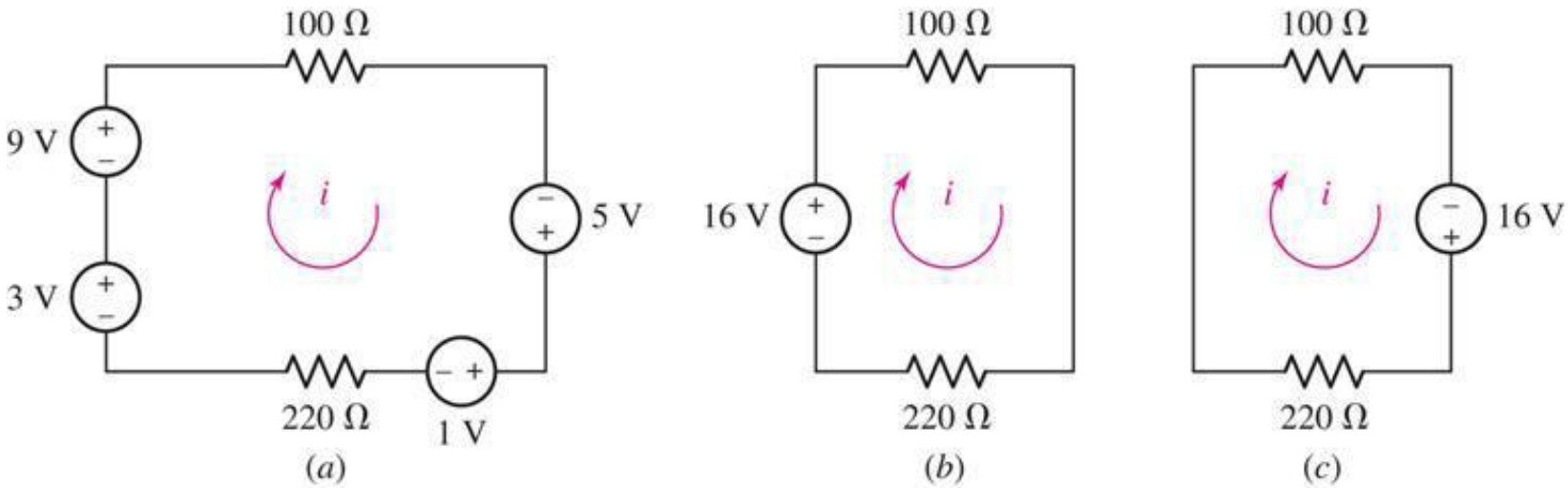


(a) $-3-9+100i-5+1+220i=0 \quad \Rightarrow \quad i=16/320=50\text{ mA}$

(b,c) $-16+100i+220i=0 \quad \Rightarrow \quad i=16/320=50\text{ mA}$

- The current and the power consumed by the resistors is the same in (a,b,c).
- However, the voltage sources must be broken out from the equivalent to solve for their individual powers delivered.

# Voltage Sources in Parallel

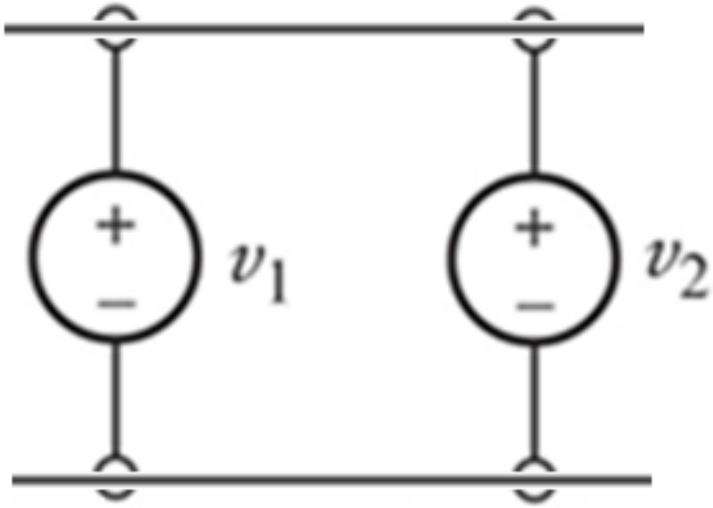


- Unless $v_1 = v_2 = \ldots$, this circuit is not valid for ideal sources.
- All real voltage sources have internal resistance and are usually not exactly equal.
- Current will flow from the higher source to the lower source until equilibrium is reached (e.g. dangerously).
- Properly designed, a bank of equal voltage sources can deliver many times the current of a single source.

# Current Sources in Parallel

- can replace current sources in parallel with a single equivalent source

$$i_{\text{equivalent}}^{\text{parallel}} = \sum_{n=1}^{N} i_n$$

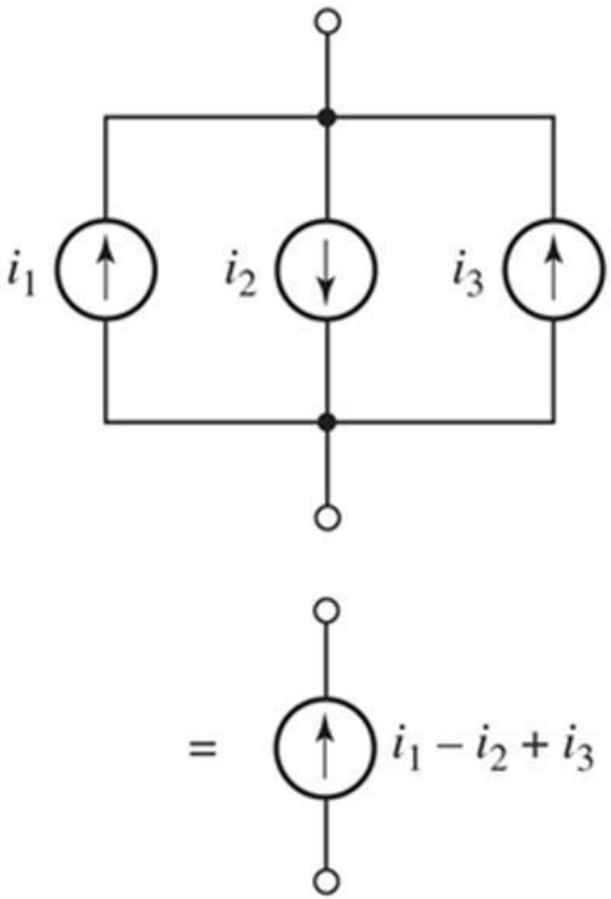


- all other voltage, current, & power relationships in the circuit remain unchanged
- as with voltage sources, this technique may simplify circuit analyses

# Example-10

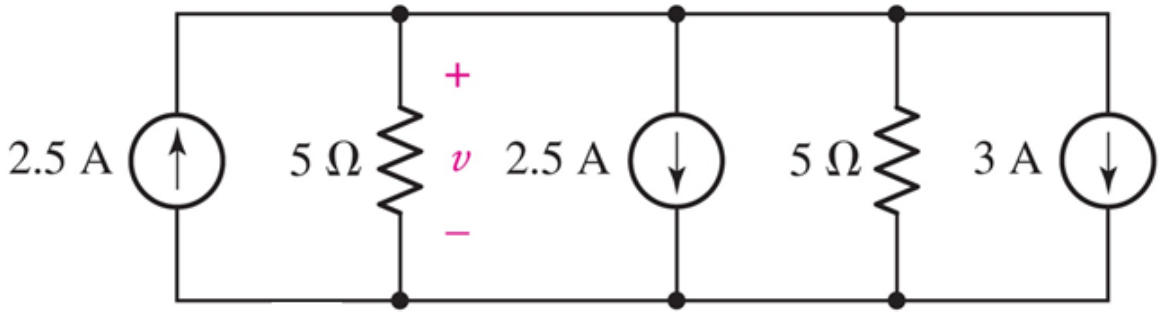


(a)

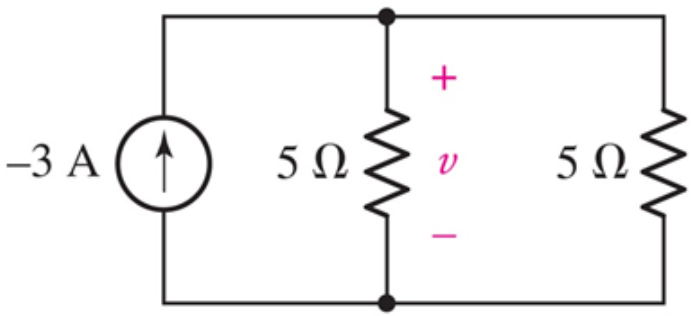


(b)

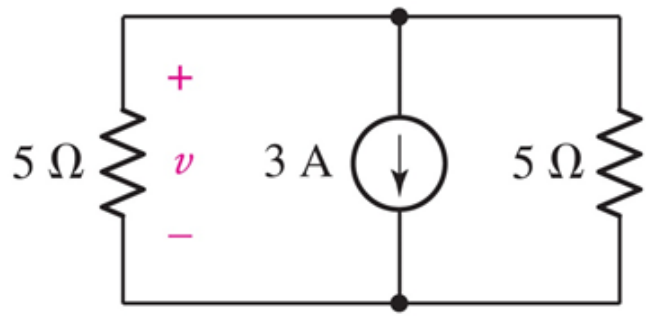


(c)

(a) $$2.5 - v/5 - 2.5 - v/5 - 3 = 0 \;\Rightarrow\; v = -7.5\text{ V}$$

(b,c) $$-3 - v/5 - v/5 = 0 \;\Rightarrow\; v = -7.5\text{ V}$$

# Resistors in Series

- As with voltage/current sources, resistors may also be replaced with equivalents.
  - In series, resistances are added.
    - the total resistance of series resistors is always larger than the value of the largest resistor.

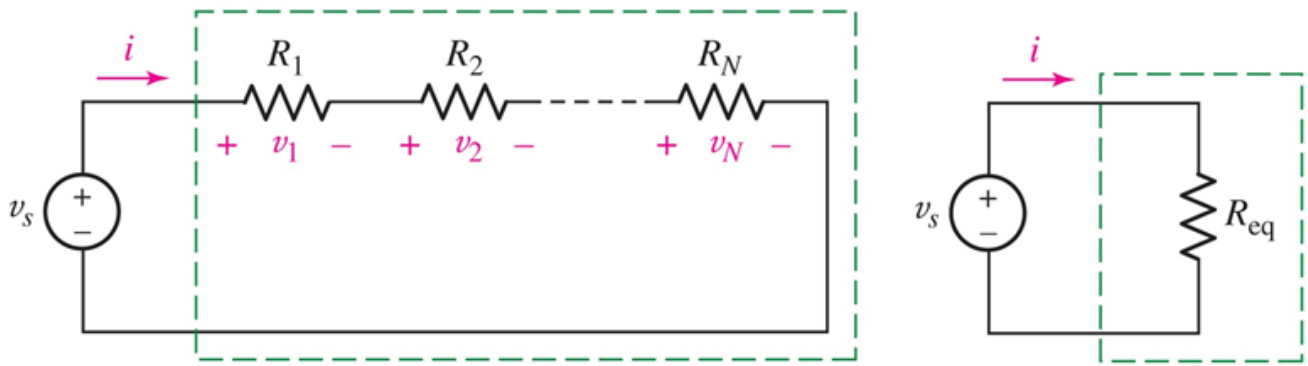


$$-v_s + v_1 + v_2 + \ldots + v_N = 0$$

$$-v_s + iR_1 + iR_2 + \ldots + iR_N = 0$$

$$-v_s + i\left[R_1 + R_2 + \ldots + R_N\right] = 0$$

$$\boxed{R_{\text{equivalent}}^{\text{series}} = \sum_{n=1}^{N} R_n}$$

# Resistors in Series

- It is important to realize that when a dc supply is connected, it does not see the individual connection of elements but simply the total resistance seen at the connection terminals
- Resistance seen at the terminals of a series circuit:

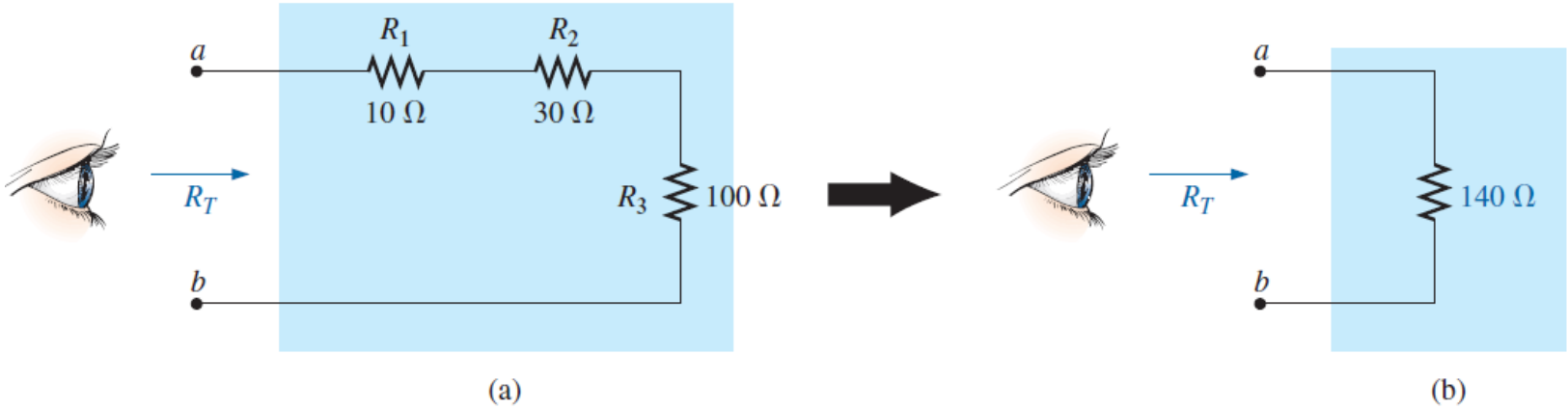

# Resistors in Series

- The total resistance of any configuration can be measured by simply connecting an ohmmeter across the access terminals as shown below.

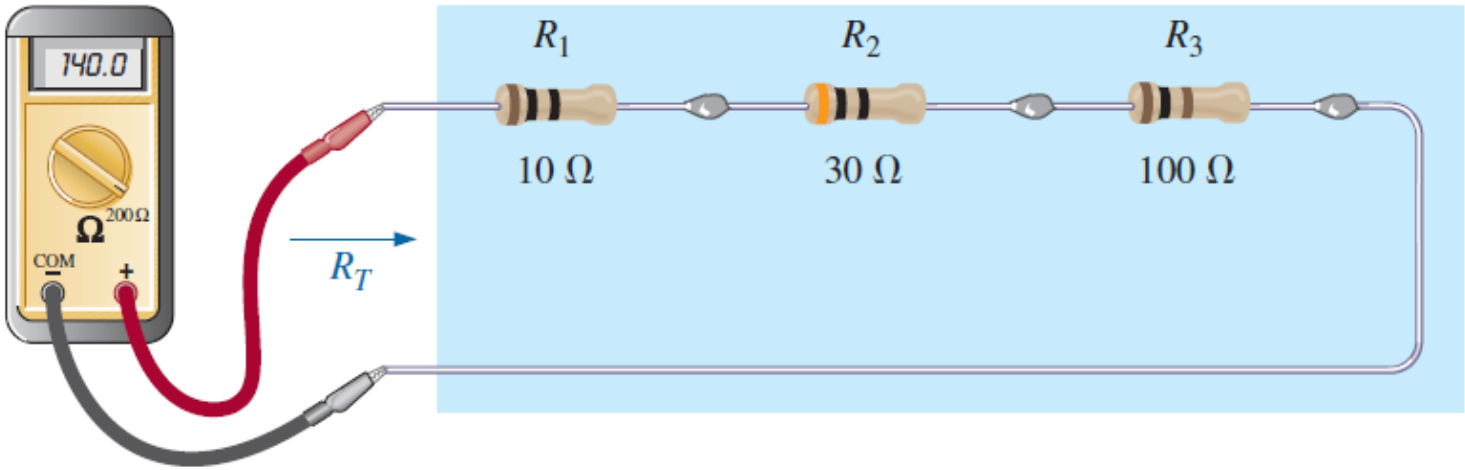


  - Since there is no polarity associated with resistance, either lead can be connected to point *a*, with the other lead connected to point *b*.

# Power Distribution in Series Circuit

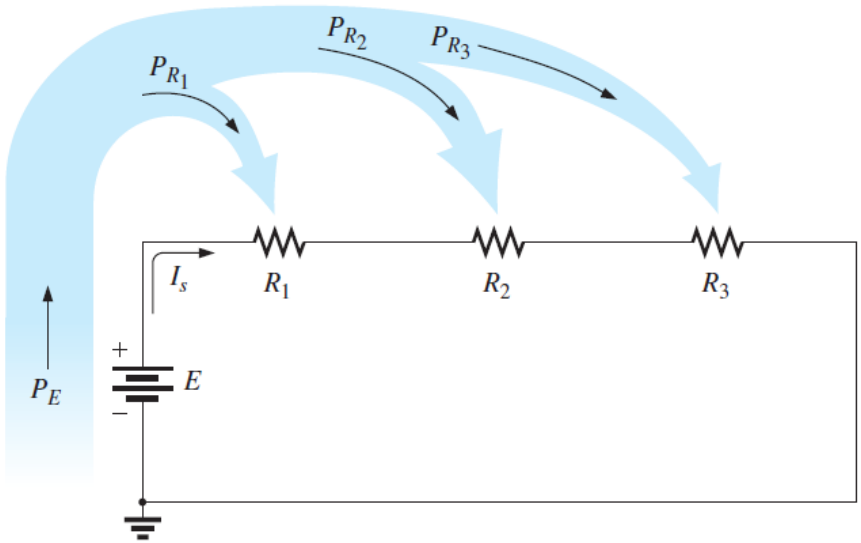


- For any network composed of resistive elements, the power applied by the battery will equal that dissipated by the resistive elements

$$P_E = P_{R_1} + P_{R_2} + P_{R_3}$$

- For $R_1$

$$P_1 = V_1 I_1 = I_1^2 R_1 = \frac{V_1^2}{R_1} \qquad \text{(watts, W)}$$

  – In a series resistive network, the larger the resistor, the more the power absorbed.

# Resistors in Parallel

- For resistors in parallel, the reciprocals of the resistances sum to 1 / (the equivalent).
  - the total resistance of parallel resistors is always less than the value of the smallest resistor.

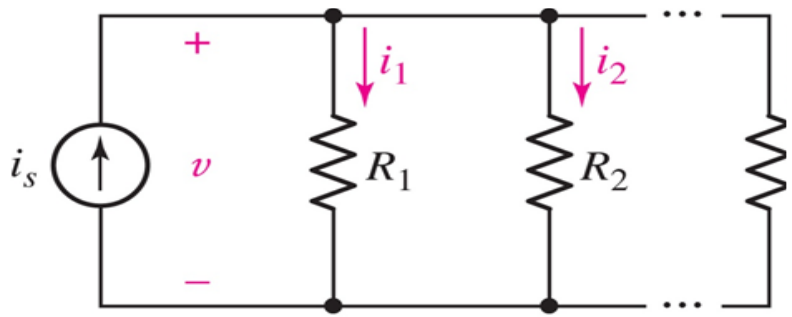


(a)

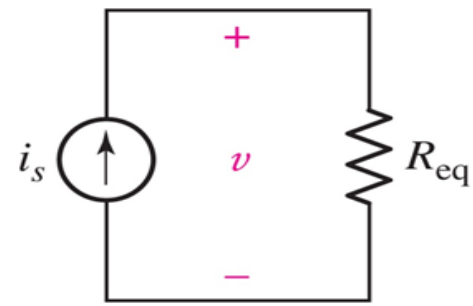


(b)

$$-i_s + i_1 + i_2 + \ldots + i_N = 0$$

$$-i_s + v/R_1 + v/R_2 + \ldots + v/R_N = 0$$

$$-i_s + v\left[1/R_1 + 1/R_2 + \ldots + 1/R_N\right] = 0$$

$$-i_s + v\left[1/R_{\text{equivalent}}^{\text{parallel}}\right] = 0$$

$$\boxed{1/R_{\text{equivalent}}^{\text{parallel}} = \sum_{n=1}^{N} 1/R_n}$$

# Resistors in Parallel

- The total resistance of any configuration can be measured by simply connecting an ohmmeter across the access terminals as shown below.

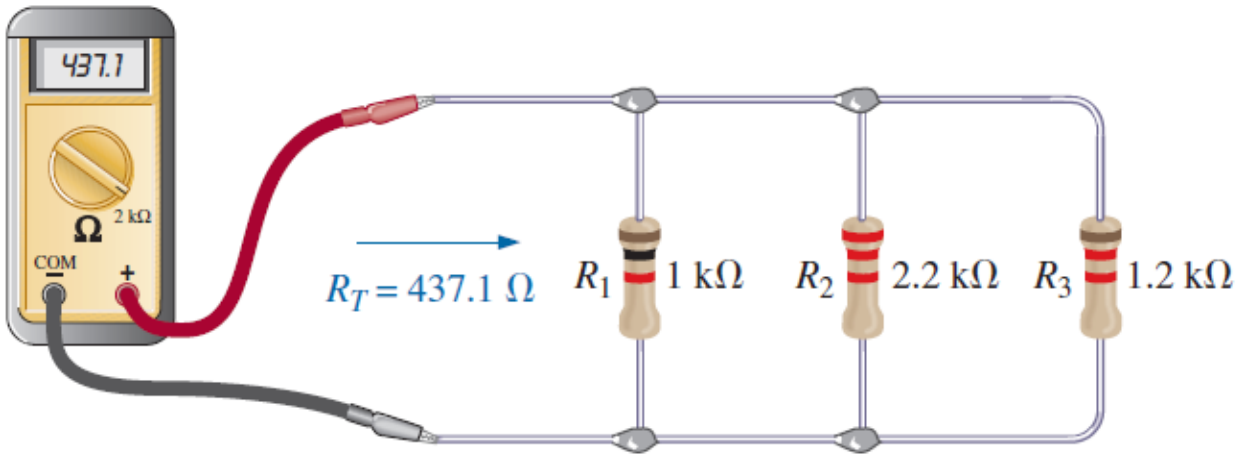


  - There is no polarity to resistance, so either lead of the ohmmeter can be connected to either side of the network.
  - Always keep in mind that ohmmeters can never be applied to a live circuit.

# Power Distribution in Parallel Circuit

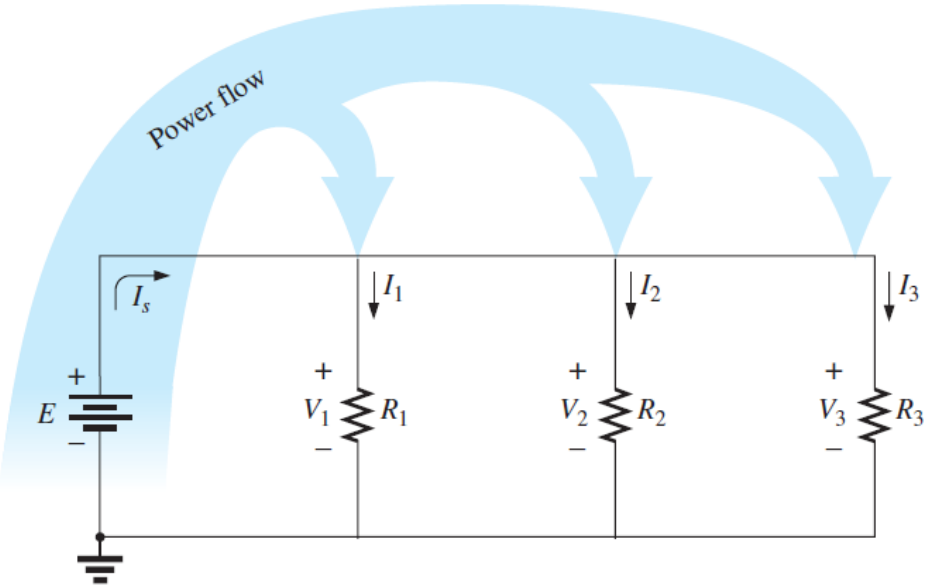


- For any network composed of resistive elements, the power applied by the battery will equal that dissipated by the resistive elements

$$P_E = P_{R_1} + P_{R_2} + P_{R_3}$$

- For $R_1$

$$P_1 = V_1 I_1 = I_1^2 R_1 = \frac{V_1^2}{R_1} \qquad \text{(watts, W)}$$

  – In a parallel resistive network, the larger the resistor, the less the power absorbed.

# Symbol for Parallel Resistors

- To make writing equations simpler, we use a symbol to indicate that a certain set of resistors are in parallel.

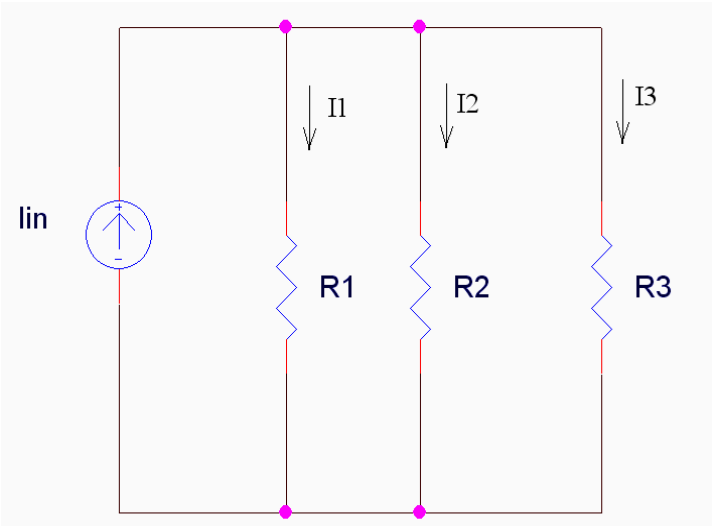


– Here, we would write

$$R1 \parallel R2 \parallel R3$$

to show that R1 is in parallel with R2 and R3.

– This also means that we should use the equation for equivalent resistance if this symbol is included in a mathematical equation.

# If G is used instead of R

- In series:
  - The reciprocal of the equivalent conductance is equal to the sum of the reciprocal of each of the conductors in series

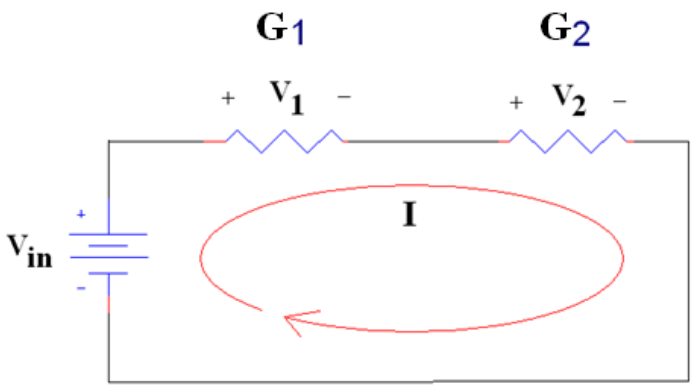


- In this example

$$1/G_{eq} = 1/G_1 + 1/G_2$$

- Simplifying

(only for 2 conductors in series)

$$G_{eq} = G_1G_2 /(G_1 + G_2)$$

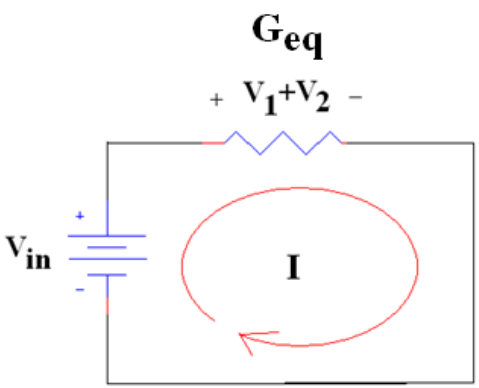

# If G is used instead of R

- In parallel :
  - The equivalent conductance is equal to the sum of all of the conductors in parallel

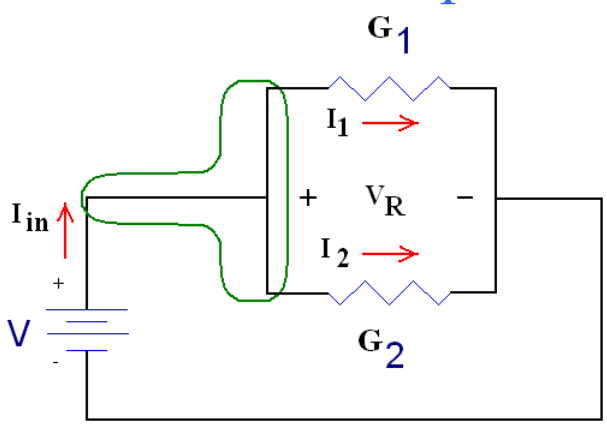


- In this example

$$G_{eq} = G_1 + G_2$$

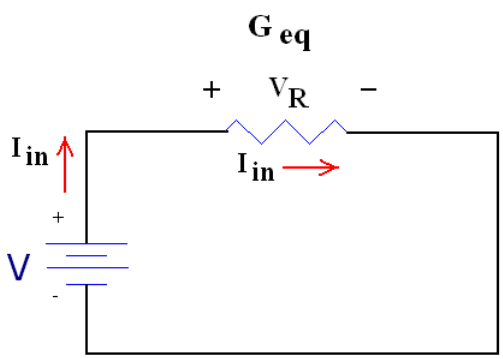

# Example-11

- Use resistance and source combinations to determine the current $i$ and the power delivered by the 80 V source in this circuit .

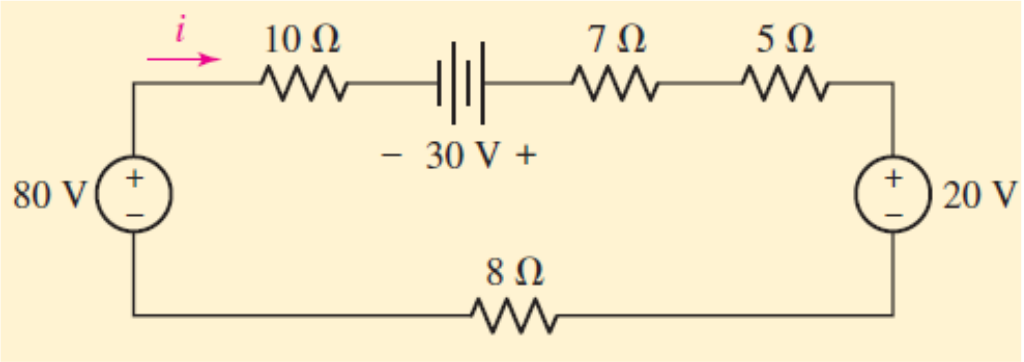


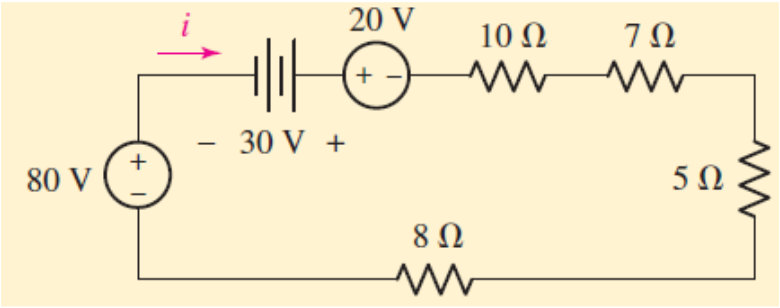


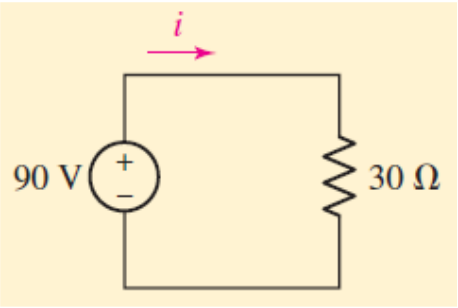


$$-90 + 30i = 0$$

$$i = 3 \text{ A}$$

$$-80 \text{ V} \times 3 \text{ A} = -240 \text{ W}$$

Actually 240 W is supplied

# Example-12

- Determine $v$ in this circuit by first combining

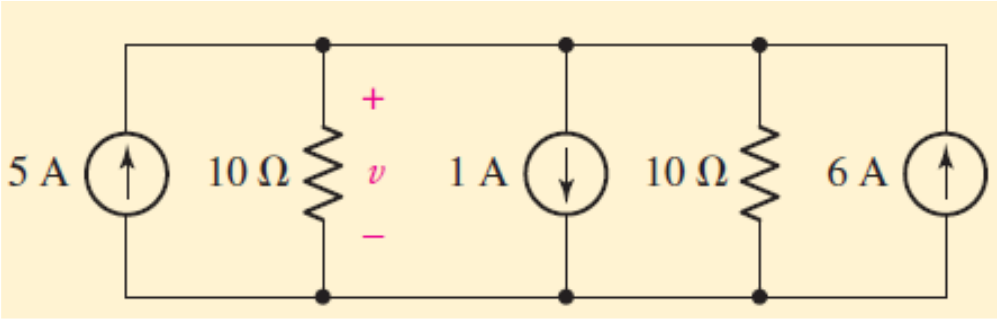


the three current sources, and then the two 10 ohm resistors.

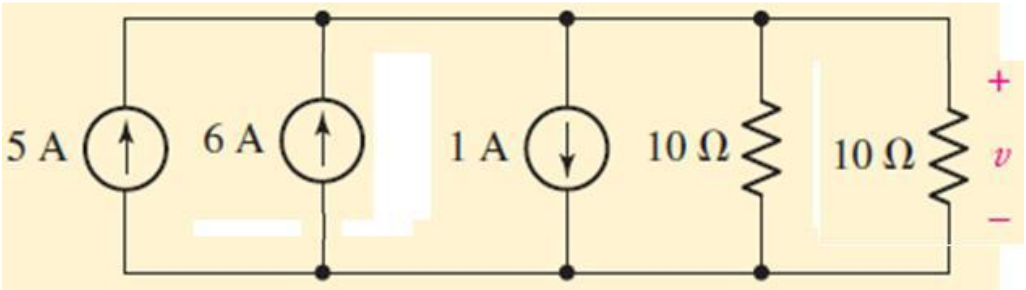


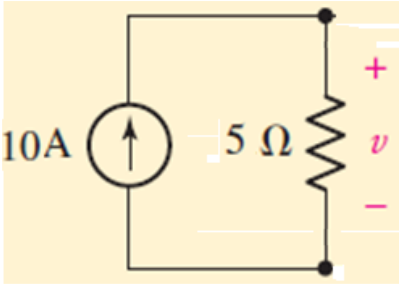


$$v = (5-1+6)10//10 = 10\times 5 = \underline{50\ \text{V}}$$

# For the same value resistors

a. As you increase the number of resistors in series
   - Does $R_{eq}$ increases or decreases?

b. As you increase the number of resistors in parallel
   - Does $R_{eq}$ increases or decreases?

# Summary

| Series and Parallel Circuits | | |
|---|---|---|
| **Series** | **Duality** | **Parallel** |
| $R_T = R_1 + R_2 + R_3 + \cdots + R_N$ | $R \rightleftarrows G$ | $G_T = G_1 + G_2 + G_3 + \cdots + G_N$ |
| $R_T$ increases ($G_T$ decreases) if additional resistors are added in series | $R \rightleftarrows G$ | $G_T$ increases ($R_T$ decreases) if additional resistors are added in parallel |
| Special case: two elements<br>$R_T = R_1 + R_2$ | $R \rightleftarrows G$ | $G_T = G_1 + G_2$<br>and $R_T = \dfrac{1}{\dfrac{1}{R_1} + \dfrac{1}{R_2}} = \dfrac{R_1 R_2}{R_1 + R_2}$ |
| $I$ the same through series elements | $I \rightleftarrows V$ | $V$ the same across parallel elements |
| $E = V_1 + V_2 + V_3$ | $E, V \rightleftarrows I$ | $I_T = I_1 + I_2 + I_3$ |
| Largest $V$ across largest $R$ | $V \rightleftarrows I$ and $R \rightleftarrows G$ | Greatest $I$ through largest $G$ (smallest $R$) |
| $V_x = \dfrac{R_x E}{R_T}$ | $E, V \rightleftarrows I$ and $R \rightleftarrows G$ | $I_x = \dfrac{G_x I_T}{G_T} = \dfrac{R_T I_T}{R_x}$<br>with $I_1 = \dfrac{R_2 I_T}{R_1 + R_2}$ and $I_2 = \dfrac{R_1 I_T}{R_1 + R_2}$ |
| $P = EI_T$ | $E \rightleftarrows I$ and $I \rightleftarrows E$ | $P = I_T E$ |
| $P = I^2 R$ | $I \rightleftarrows V$ and $R \rightleftarrows G$ | $P = V^2 G = V^2/R$ |
| $P = V^2/R$ | $V \rightleftarrows I$ and $R \rightleftarrows G$ | $P = I^2/G = I^2 R$ |

# Voltage Division

- All resistors in series share the same current

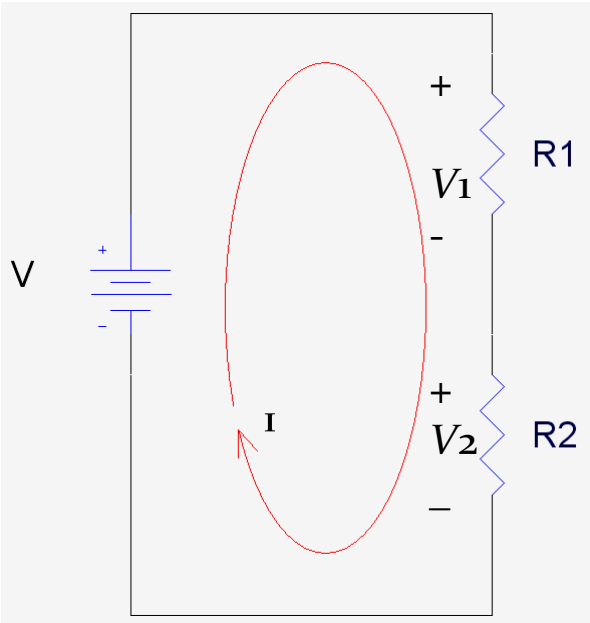


– From KVL and Ohm's Law :

$$0 = -V + V_1 + V_2$$
$$V = I \times R1 + I \times R2$$
$$V = I \times (R1 + R2) = I \times R_{eq}$$
$$R_{eq} = R1 + R2 = V/I \qquad I = V/R_{eq}$$

$$V_1 = I \times R1 = \frac{V}{R_{eq}} \times R1 = \frac{R1}{R1 + R2} \times V$$
$$V_2 = I \times R2 = \frac{V}{R_{eq}} \times R2 = \frac{R2}{R1 + R2} \times V$$

– the source voltage $V$ is divided among the resistors in direct proportion to their resistances;
  - the larger the resistance, the larger the voltage drop.

– This is called the principle of voltage division, and the circuit is called a voltage divider.

# Voltage Division

- In general, if a voltage divider has $N$ resistors ($R_1$, $R_2$, . . . , $R_N$) in series with the source voltage $V_{total}$, the $n$th resistor ($R_n$) will have a voltage drop of

$$V_n = \frac{R_n}{R_1 + R_2 + \cdots + R_N} \times V_{total} = \left[\frac{R_n}{R_{eq}}\right] \times V_{total}$$

  where $V_{total}$ is the total of the voltages applied across the resistors and $R_{eq}$ is equivalent series resistance.
- The percentage of the total voltage associated with a particular resistor is equal to the percentage that that resistor contributed to the equivalent resistance, $R_{eq}$.
  - The largest value resistor has the largest voltage.

# Voltage Division

- Using voltmeters to measure the voltages across the resistors

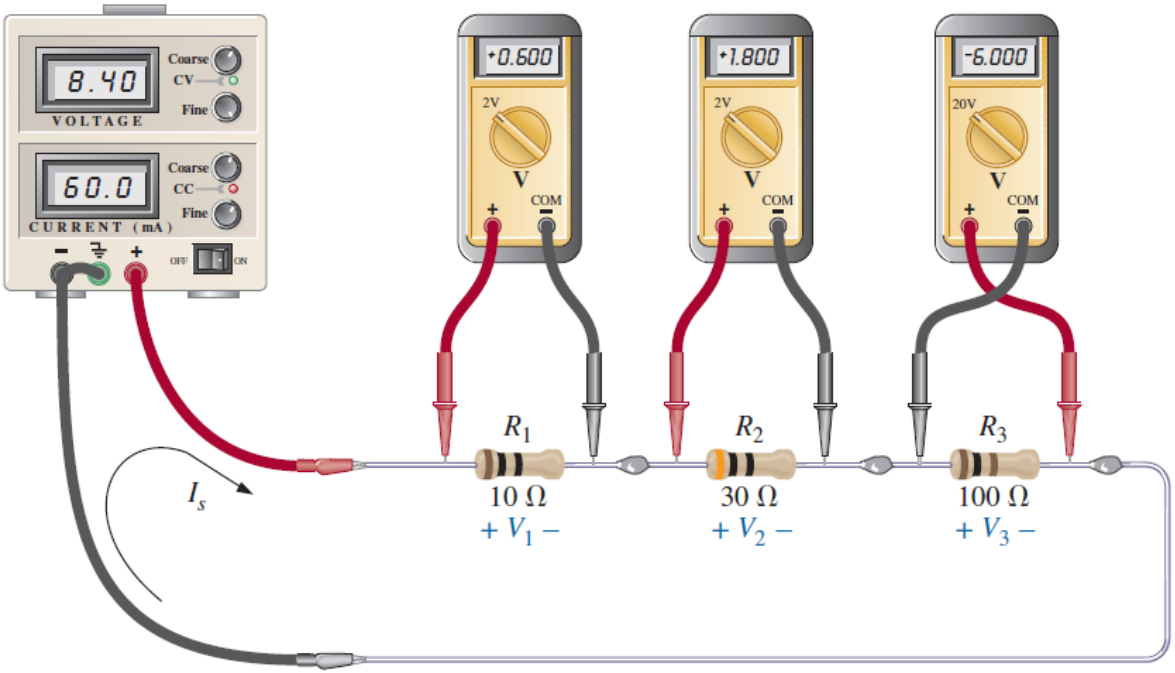


- The positive (normally red) lead of the voltmeter is connected to the point of higher potential (positive sign), with the negative (normally black) lead of the voltmeter connected to the point of lower potential (negative sign) for $V_1$ and $V_2$.
- The result is a positive reading on the display.
- If the leads were reversed, the magnitude would remain the same, but a negative sign would appear as shown for $V_3$.

# Voltage Division

- Measuring the current throughout the series circuit.

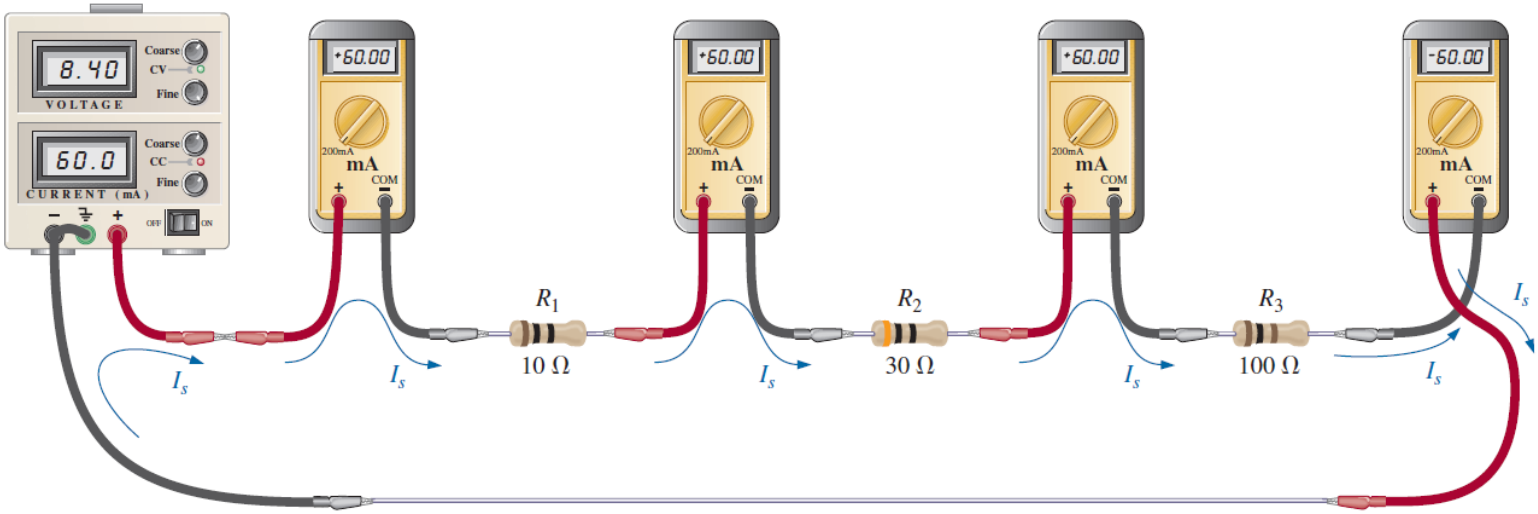


- If each ampermeter is to provide a positive reading, the connection must be made such that conventional current enters the positive terminal of the meter and leaves the negative terminal.
  - The ampermeter to the right of $R_3$ connected in the reverse manner, resulting in a negative sign for the current.

# Example 01

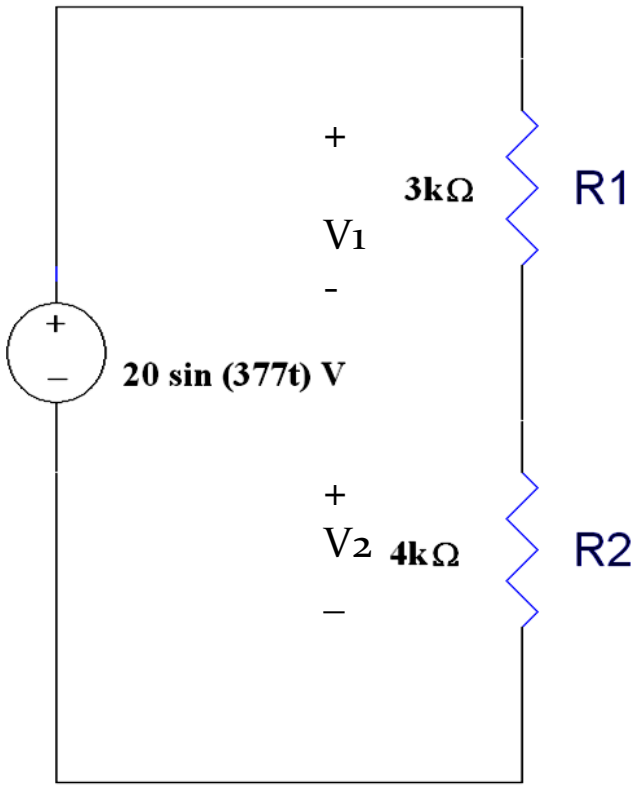


- Find the $V_1$, the voltage across $R1$, and $V_2$, the voltage across $R2$

$$V_1 = [R_1/(R_1 + R_2)]V_{total}$$
$$V_1 = [3k\Omega/(3k\Omega + 4k\Omega)][20V\sin(377t)]$$
$$V_1 = 8.57V\sin(377t)$$

$$V_2 = [R_2/(R_1 + R_2)]V_{total}$$
$$V_2 = [4k\Omega/(3k\Omega + 4k\Omega)][20V\sin(377t)]$$
$$V_2 = 11.4V\sin(377t)$$

– Check: $V_1 + V_2$ should equal $V_{\text{total}}$
  - $8.57\sin(377t) + 11.4\sin(377t) = 20\sin(377t)$ V

# Example 02

- Find the voltages listed in the circuit below.

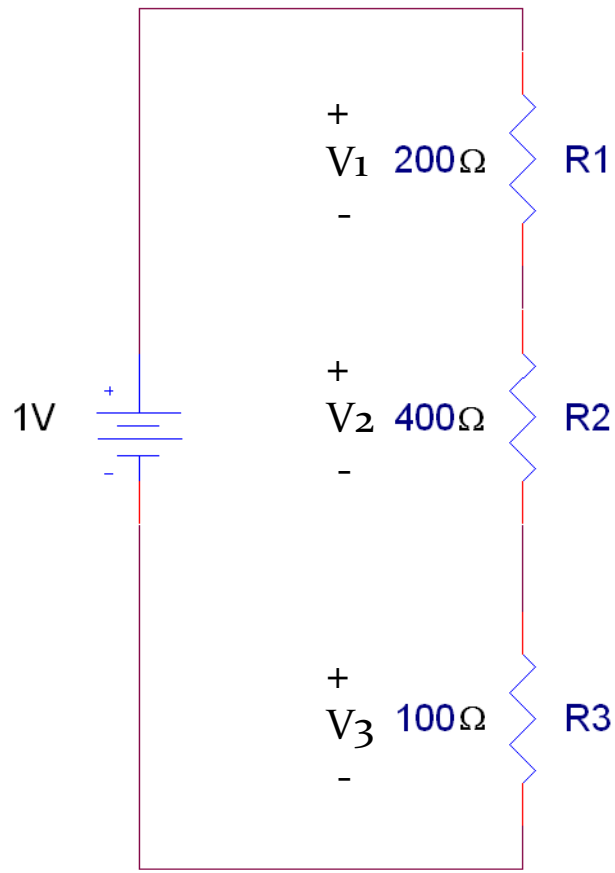


$$R_{eq} = 200\Omega + 400\Omega + 100\Omega$$
$$R_{eq} = 700\Omega$$

$$V_1 = [200\Omega / 700\Omega](1V)$$
$$V_1 = 0.286V$$

$$V_2 = [400\Omega / 700\Omega](1V)$$
$$V_2 = 0.571V$$

$$V_3 = [100\Omega / 700\Omega](1V)$$
$$V_3 = 0.143V$$

– Check: $V_1 + V_2 + V_3 = 1\text{V}$

# Example 03

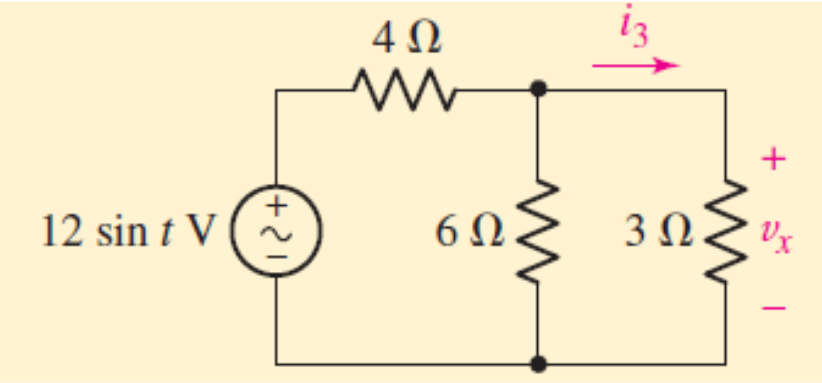


- Determine $v_x$ in this circuit:

  $6\ \Omega \parallel 3\ \Omega = 2\ \Omega$

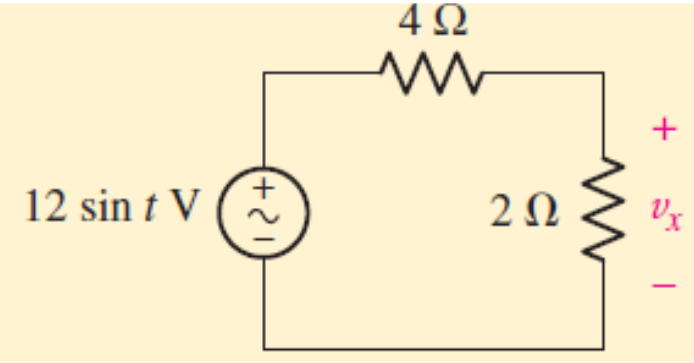


$$v_x = (12 \sin t)\frac{2}{4+2} = 4 \sin t$$

# Symbol for Parallel Resistors

- To make writing equations simpler, we use a symbol to indicate that a certain set of resistors are in parallel.

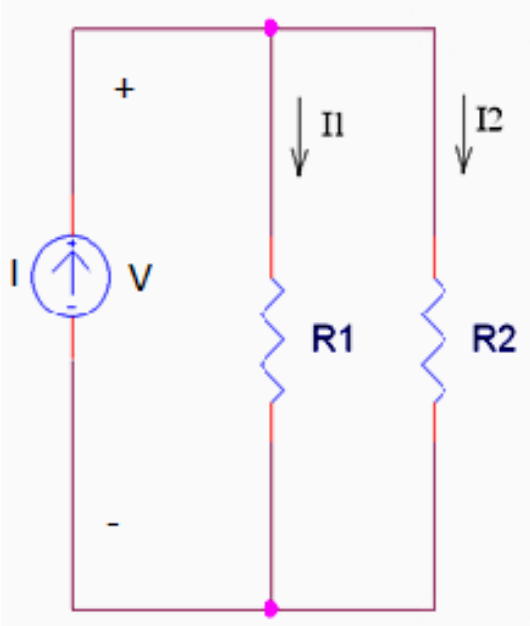


  – Here, we would write

$$R1 \parallel R2$$

  to show that R1 is in parallel with R2.

  – This also means that we should use the equation for equivalent resistance if this symbol is included in a mathematical equation.

# Current Division

- All resistors in parallel share the same voltage

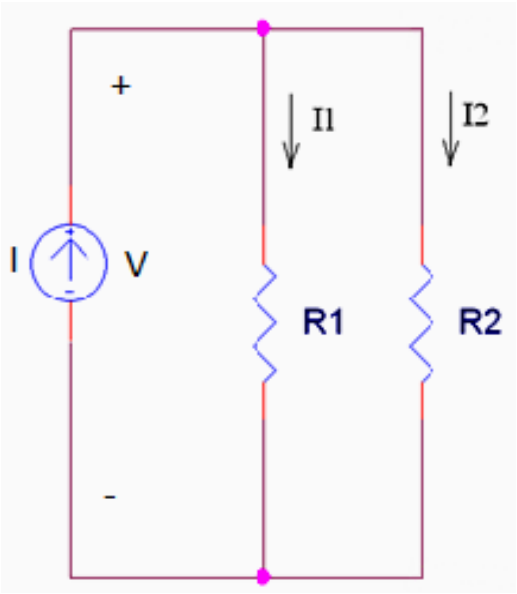


– From KCL and Ohm's Law :

$$0 = -I + I_1 + I_2$$

$$I = \frac{V}{R_1} + \frac{V}{R_2} = V \times \left(\frac{1}{R_1} + \frac{1}{R_2}\right)$$

$$I = \frac{V}{R_{eq}} = \frac{V}{R_1 \| R_2} \qquad V = I \times R_{eq}$$

$$R_{eq} = R_1 \| R_2 = \frac{1}{\frac{1}{R_1} + \frac{1}{R_2}} = \frac{R_1 R_2}{R_1 + R_2}$$

$$I_1 = \frac{V}{R_1} = \frac{I \times R_{eq}}{R_1} = \frac{R_1 \| R_2}{R_1} \times I = \frac{R_2}{R_1 + R_2} \times I$$

$$I_2 = \frac{V}{R_2} = \frac{I \times R_{eq}}{R_2} = \frac{R_1 \| R_2}{R_2} \times I = \frac{R_1}{R_1 + R_2} \times I$$

– The total current *I* is shared by the resistors in inverse proportion to their resistances
  - the smaller the resistance, the larger the current flow.

– This is called the principle of current division, and the circuit is called a current divider.

# Current Division

- In general, if a current divider has $N$ resistors ($R_1$, $R_2$, . . . , $R_N$) in parallel with the source current $I_{total}$, the $n$th resistor ($R_n$) will have a current flow

$$I_n = \frac{1/R_n}{\frac{1}{R_1} + \frac{1}{R_2} + \cdots + \frac{1}{R_N}} \times I_{total} = \left[\frac{R_{eq}}{R_n}\right] \times I_{total}$$

  where $I_{total}$ is the total of the currents applied to the resistors and $R_{eq}$ is equivalent parallel resistance.
- The percentage of the total current associated with a particular resistor is equal to the percentage that that resistor contributed to the equivalent resistance, $R_{eq}$.
  - The smallest value resistor has the largest current

# Current Division

- If a current divider circuit with $N$ resistors (having conductances $G_1, G_2, \ldots, G_N$) in parallel with the source current $I_{total}$, the $n$th resistor (with conductance $G_n$) will have a current flow

$$I_n = \frac{G_n}{G_1 + G_2 + \cdots + G_N} \times I_{total} = \left[\frac{G_n}{G_{eq}}\right] \times I_{total}$$

  where $I_{total}$ is the total of the currents applied to the resistors and $G_{eq}$ is equivalent parallel conductance.
- The percentage of the total current associated with a particular resistor is equal to the percentage that that resistor contributed to the equivalent conductance, $G_{eq}$.
  - The largest conductance value resistor has the largest current

# Current Division

- For three resistors parallel circuit, current in branches:

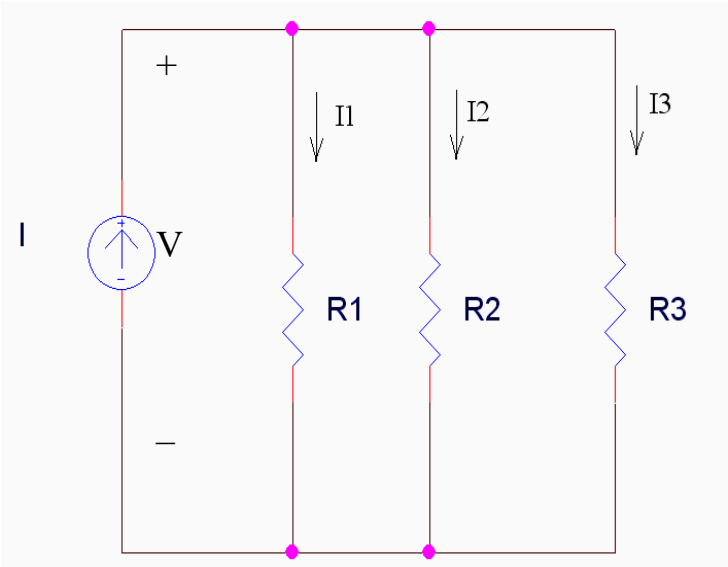


$$I_1 = \frac{R_2 \| R_3}{R_1 + R_2 \| R_3} I_{in}$$

$$I_2 = \frac{R_1 \| R_3}{R_2 + R_1 \| R_3} I_{in}$$

$$I_3 = \frac{R_1 \| R_2}{R_3 + R_1 \| R_2} I_{in}$$

- Alternatively, you can reduce the number of resistors in parallel from 3 to 2 using an equivalent resistor.
- If you want to solve for current $I_1$, then find an equivalent resistor for $R_2$ in parallel with $R_3$.

# Current Division

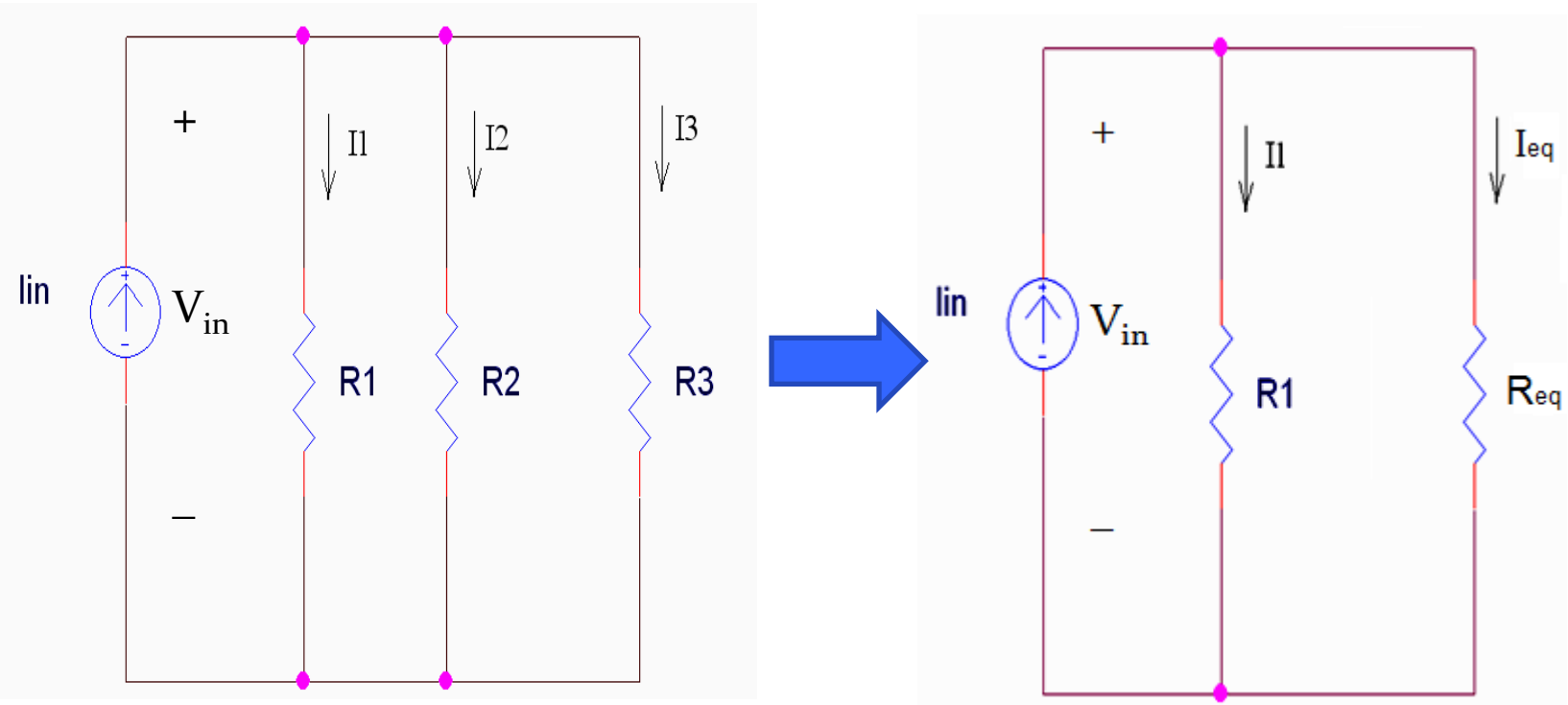


where $R_{eq} = R_2 \| R_3 = \dfrac{R_2 R_3}{R_2 + R_3}$ and $I_1 = \dfrac{R_{eq}}{R_1 + R_{eq}} I_{in}$

# Current Division

The current associated with one resistor $R_1$ in parallel with one other resistor is:

$$I_1 = \left[ \frac{R_2}{R_1 + R_2} \right] I_{total}$$

The current associated with one resistor $R_m$ in parallel with two or more resistors is:

$$I_m = \left[ \frac{R_{eq}}{R_m} \right] I_{total}$$

where $I_{total}$ is the total of the currents entering the node shared by the resistors in parallel.

# Resistors in Parallel

- Measuring the voltages of a parallel dc network

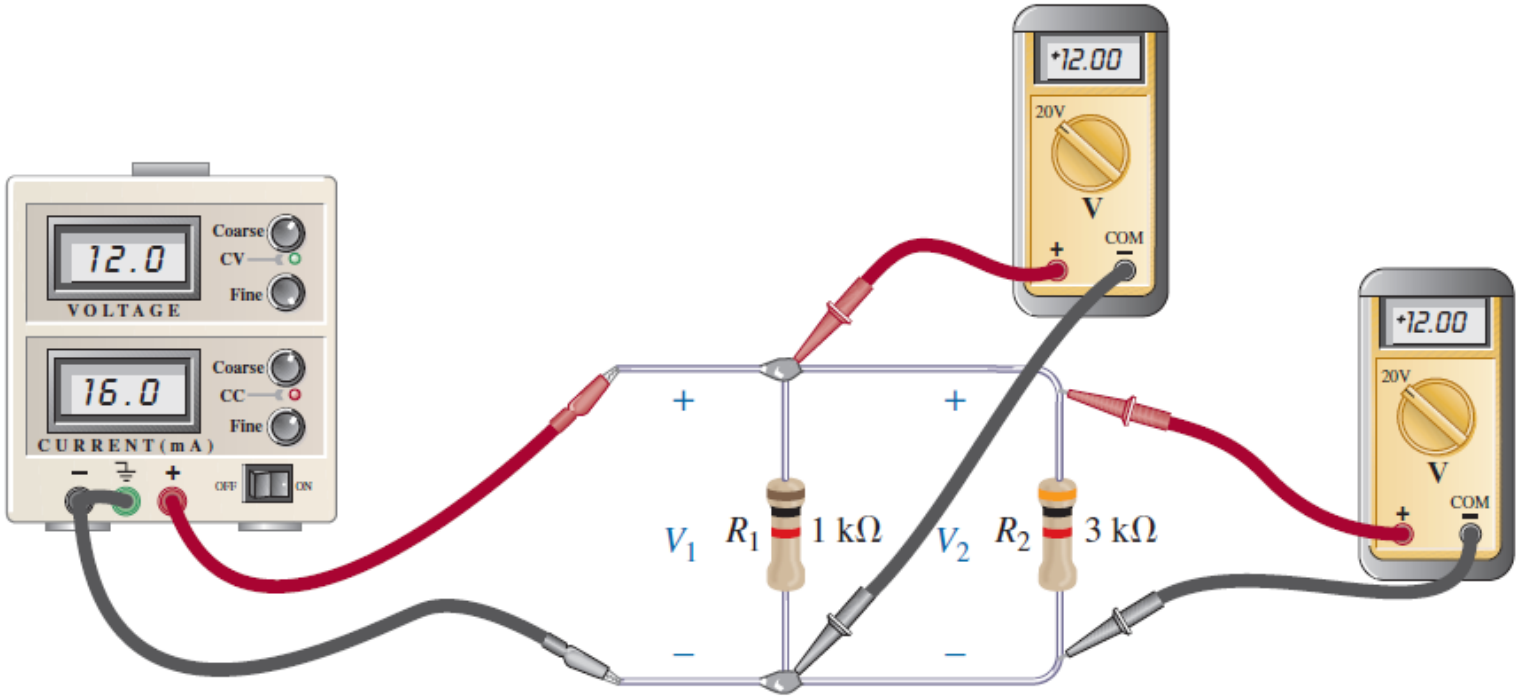


  - Note that the positive or red lead of each voltmeter is connected to the high (positive) side of the voltage across each resistor to obtain a positive reading.

# Resistors in Parallel

- Measuring the source current of a parallel network

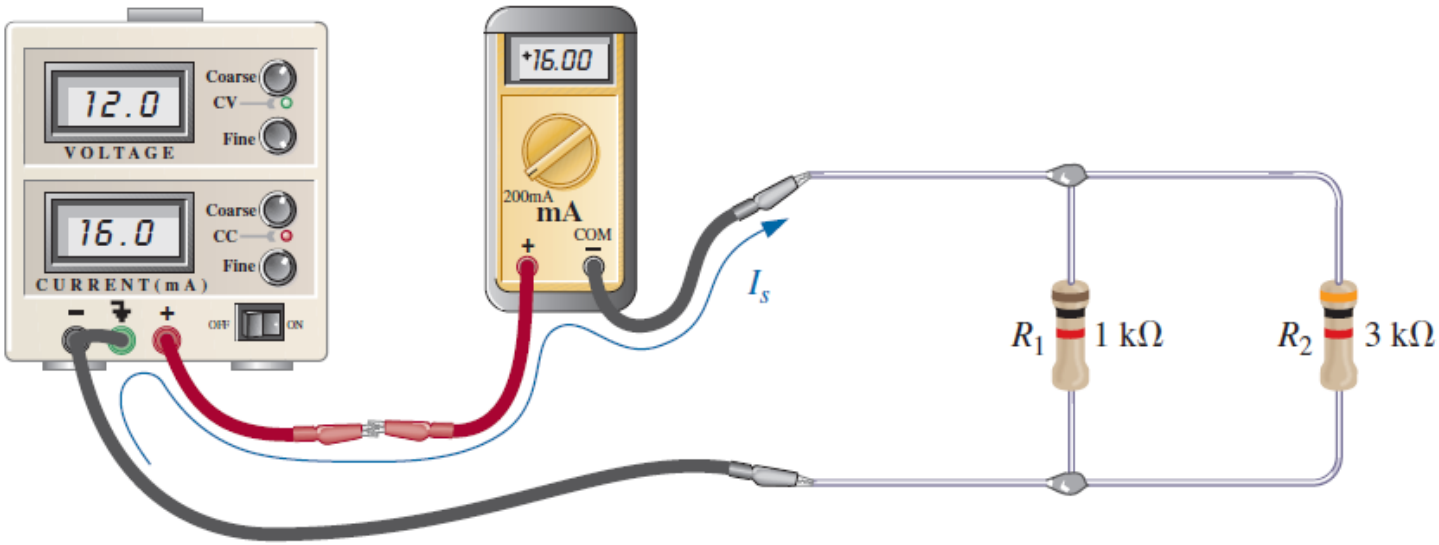


  – The red or positive lead of the meter is connected so that the source current enters that lead and leaves the negative or black lead to ensure a positive reading.

# Resistors in Parallel

- Measuring the current through resistor $R_1$

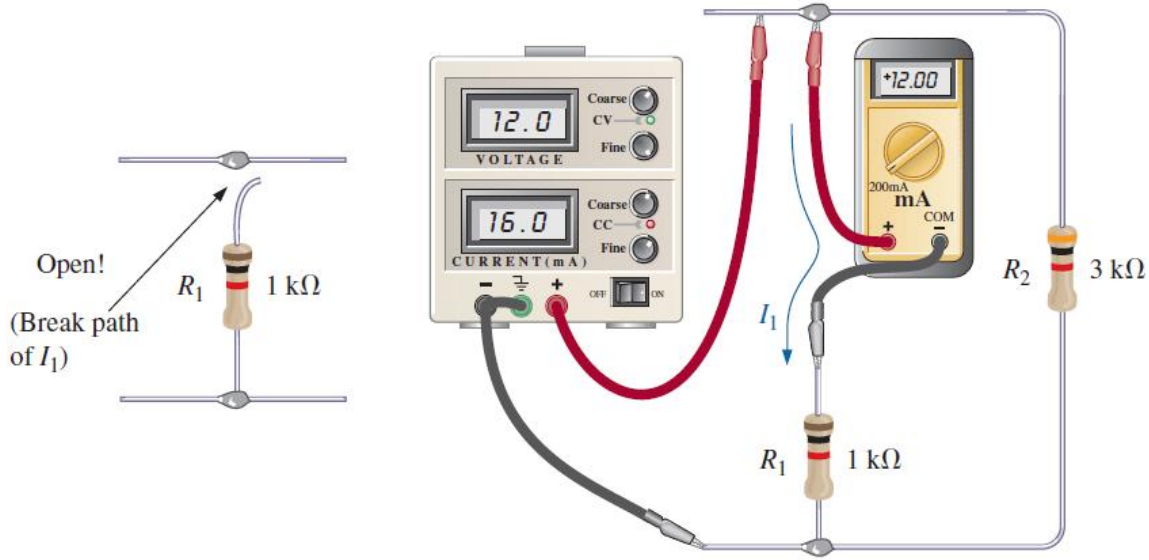


  – resistor $R_1$ must be disconnected from the upper connection point to establish an open circuit.
    - The ampermeter is then inserted between the resulting terminals so that the current enters the positive or red terminal

# Example 04

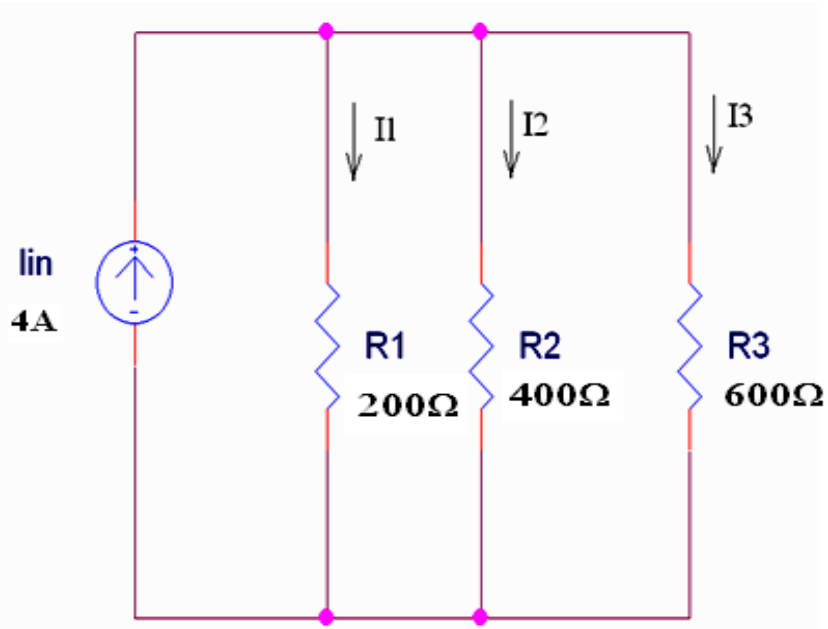


- Find currents $I_1$, $I_2$, and $I_3$ in the circuit

$$R_{eq} = \frac{1}{\frac{1}{R_1} + \frac{1}{R_2} + \frac{1}{R_2}}$$

$$= \frac{1}{\frac{1}{200} + \frac{1}{400} + \frac{1}{600}} = 109\ \Omega$$

$$I_1 = \frac{R_{eq}}{R_1} \times I_{in} = \frac{109}{200} \times 4 = 2.18\ \text{A}$$

$$I_1 = \frac{R_{eq}}{R_2} \times I_{in} = \frac{109}{400} \times 4 = 1.09\ \text{A}$$

$$I_1 = \frac{R_{eq}}{R_3} \times I_{in} = \frac{109}{600} \times 4 = 0.727\ \text{A}$$

# Example 05…

- The circuit to the right has a series and parallel combination of resistors plus two voltage sources.
  - Find V1 and Vp
  - Find I1, I2, and I3

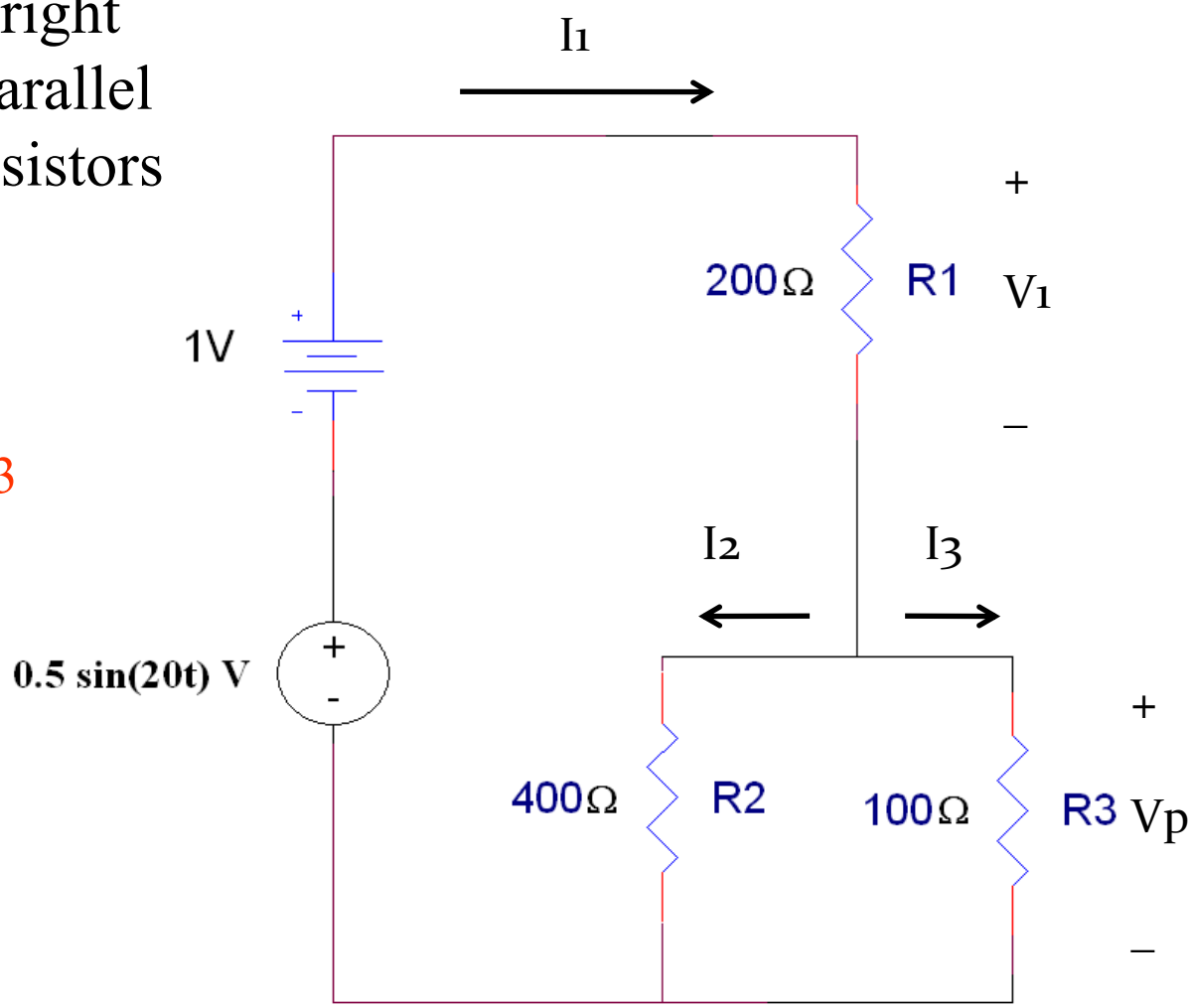

# ...Example 05…

- First, calculate the total voltage applied to the network of resistors.
  - This is the addition of two voltage sources in series.

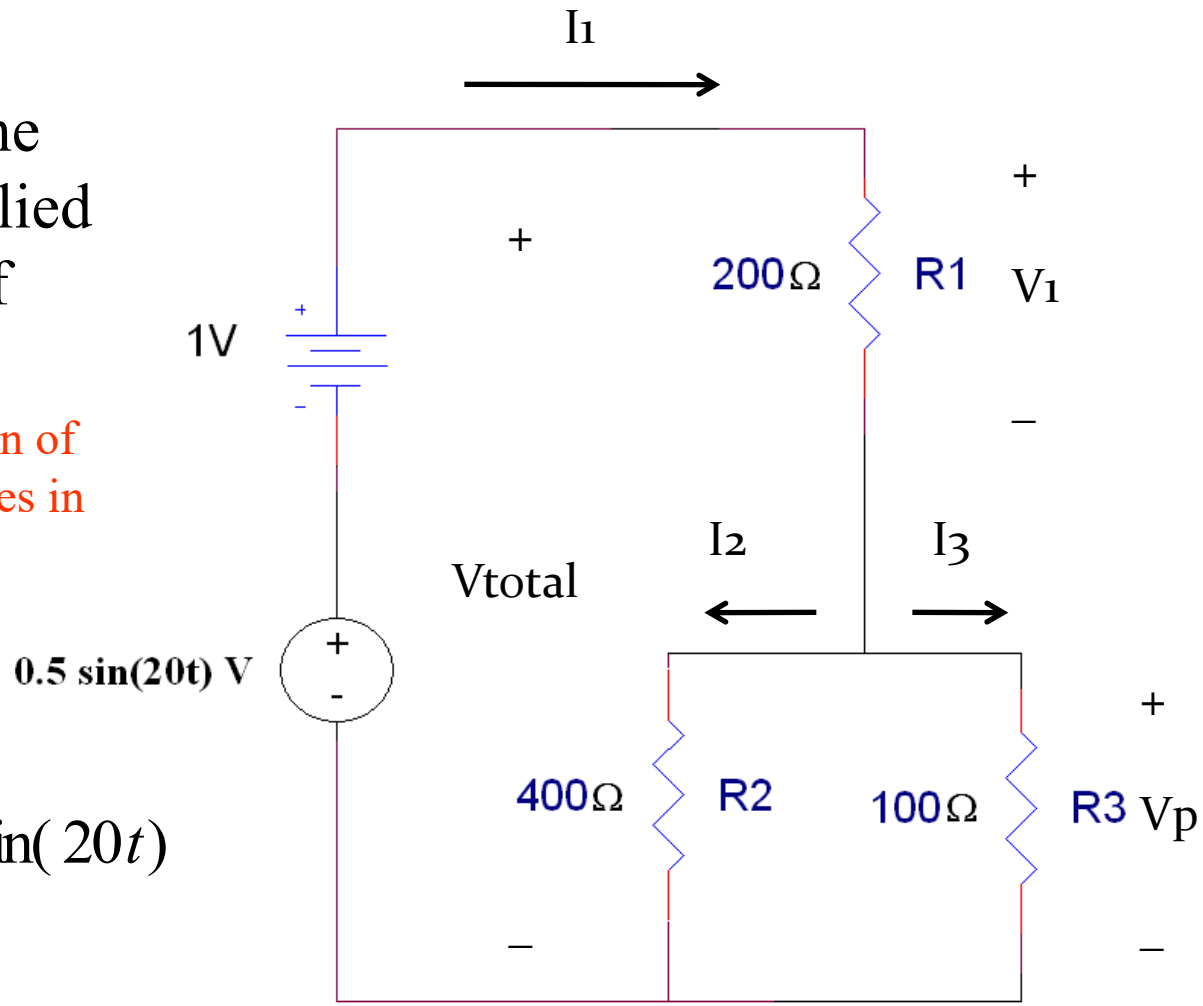


$$V_{total} = 1V + 0.5V\sin(20t)$$

# …Example 05…

- Second, calculate the equivalent resistor that can be used to replace the parallel combination of R2 and R3.

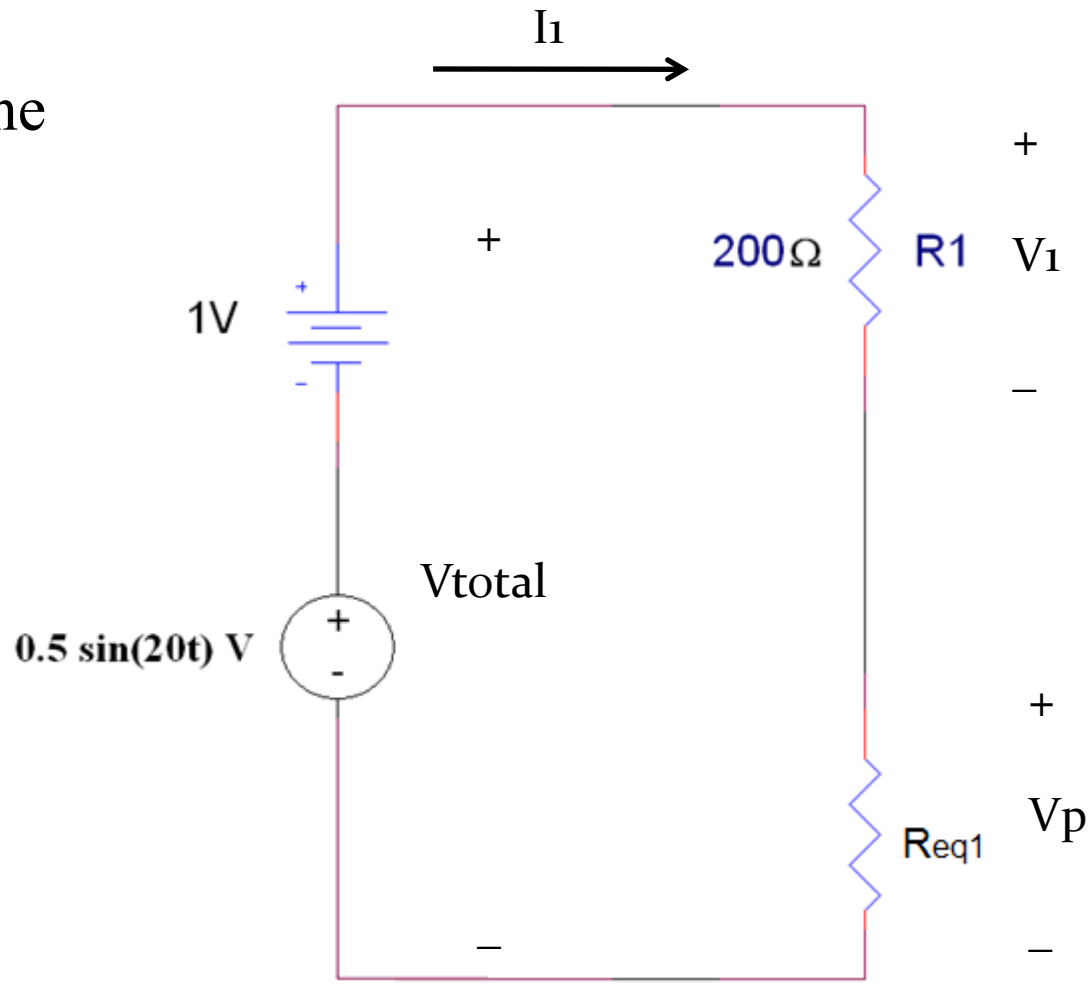


$$R_{eq1} = \frac{R_2 R_3}{R_2 + R_3}$$

$$R_{eq1} = \frac{400\Omega(100\Omega)}{400\Omega + 100\Omega}$$

$$R_{eq1} = 80\Omega$$

# …Example 05…

- To calculate the value for I1, replace the series combination of R1 and Req1 with another equivalent resistor.

$$R_{eq2} = R_1 + R_{eq1}$$

$$R_{eq2} = 200\Omega + 80\Omega$$

$$R_{eq2} = 280\Omega$$

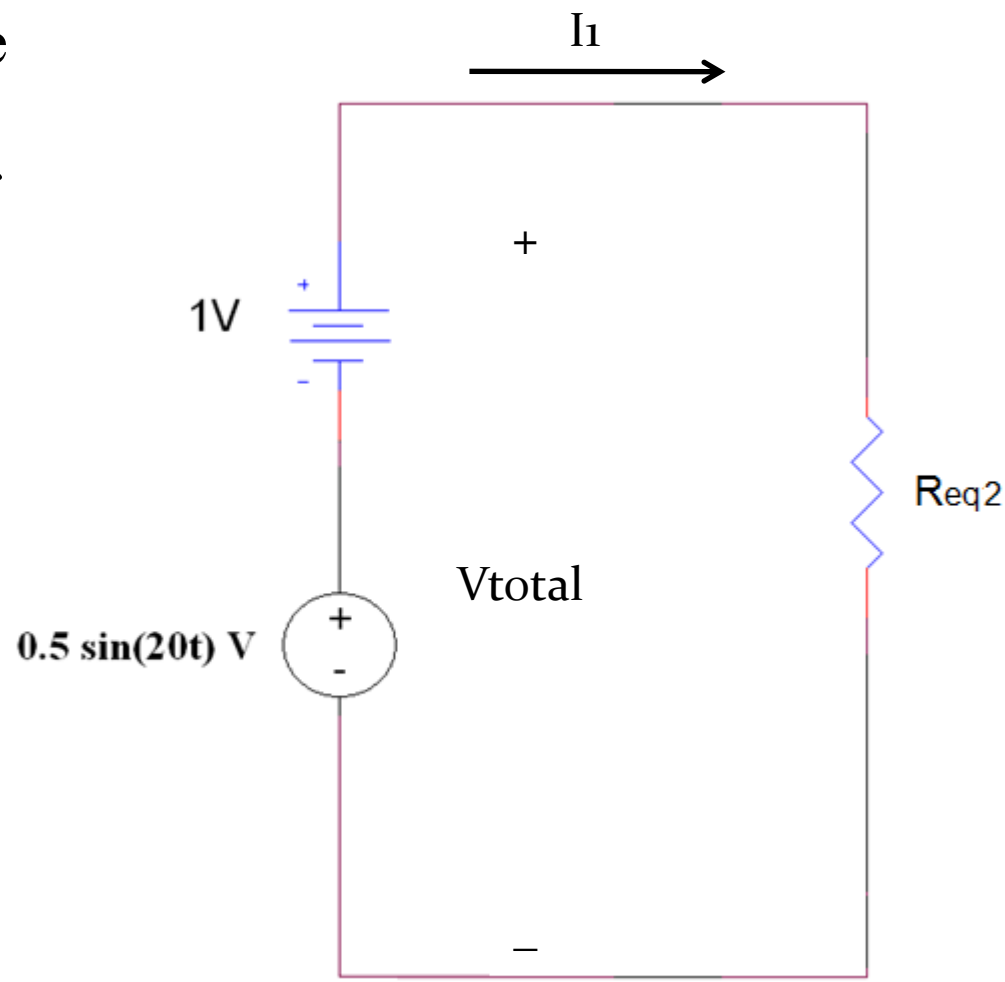

# …Example 05…

$$I_1 = \frac{V_{total}}{R_{eq2}}$$

$$I_1 = \frac{1V + 0.5V\sin(20t)}{280\Omega}$$

$$I_1 = \frac{1V}{280\Omega} + \frac{0.5V\sin(20t)}{280\Omega}$$

$$I_1 = 3.57mA + 1.79mA\sin(20t)$$

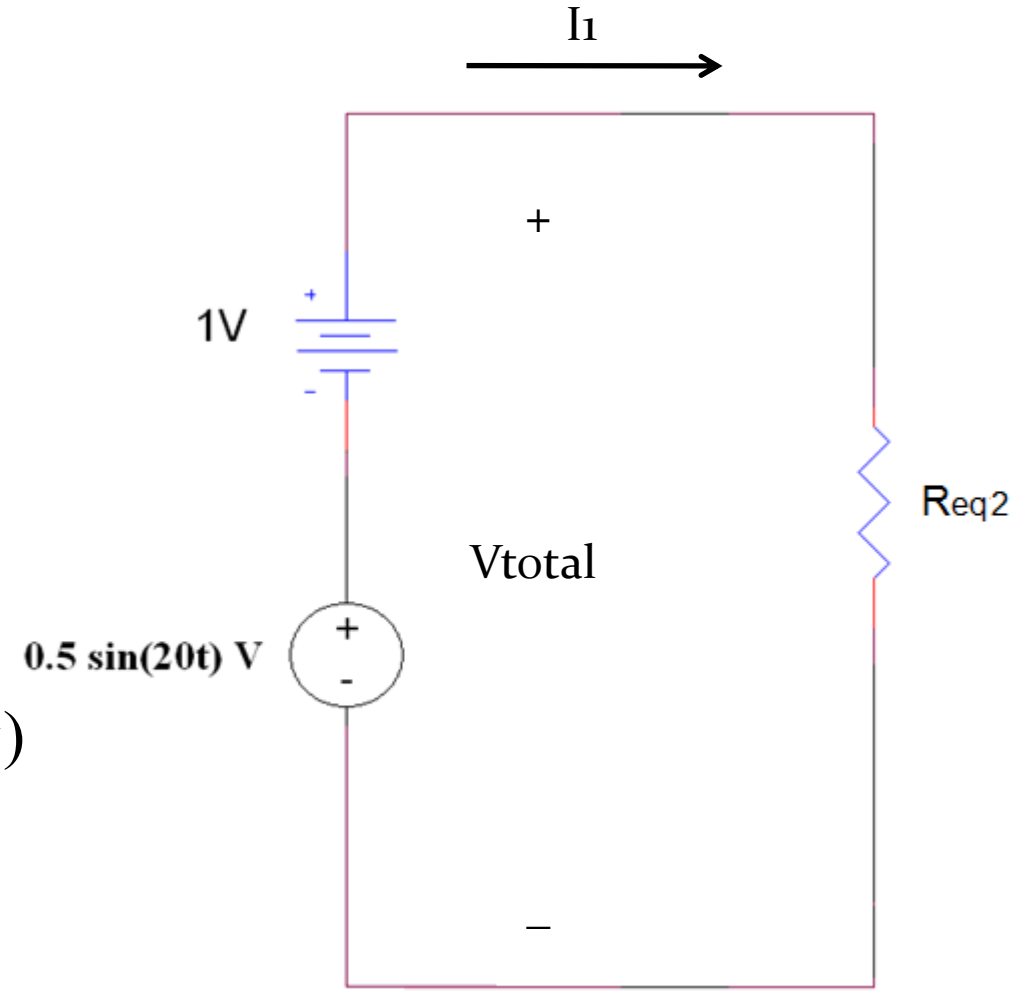

# …Example 05…

- To calculate V1, use one of the previous simplified circuits where R1 is in series with Req1.

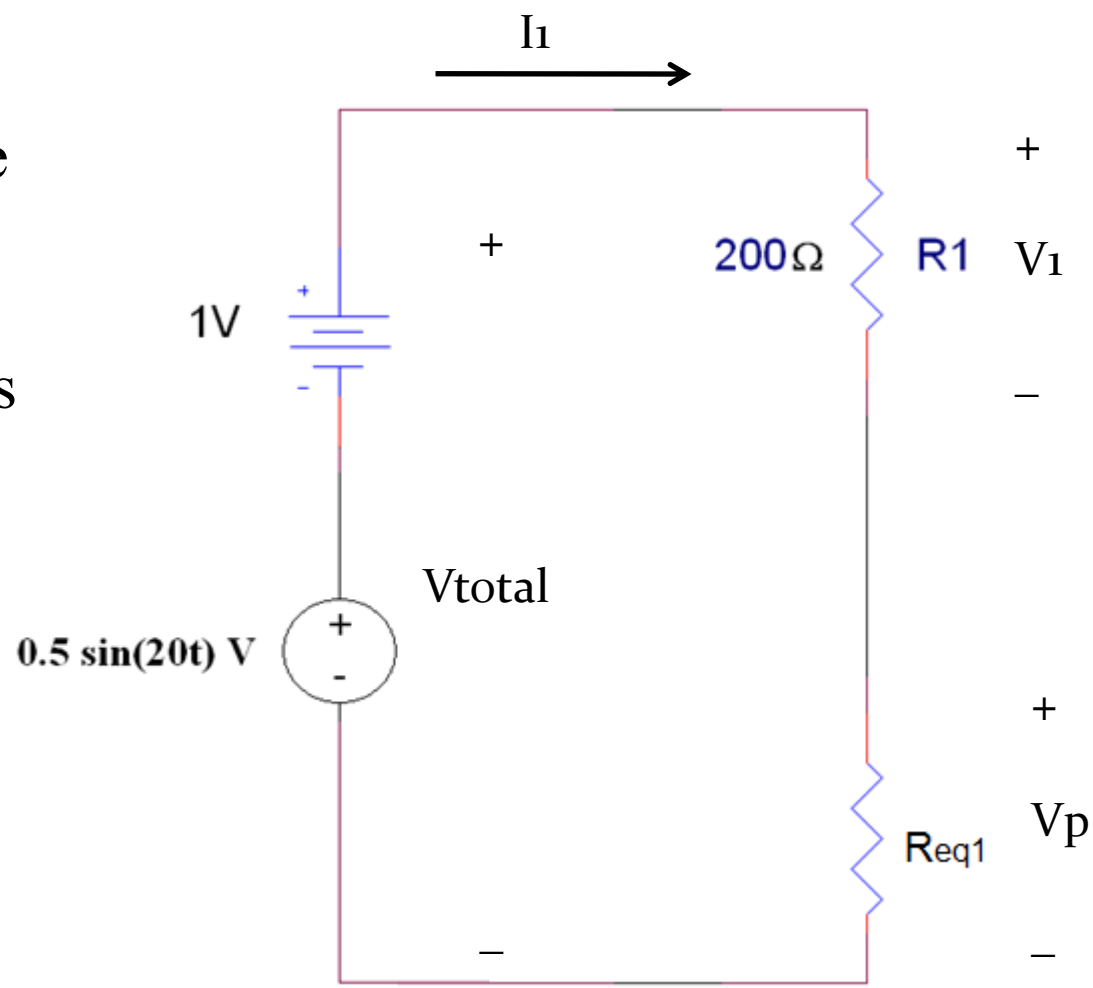


$$V_1 = \frac{R_1}{R_1 + R_{eq}} V_{total}$$

or

$$V_1 = R_1 I_1$$

$$V_1 = 0.714V + 0.357V \sin(20t)$$

# …Example 05…

To calculate $Vp$:

$$V_p = \frac{R_{eq1}}{R_1 + R_{eq1}} V_{total}$$

or

$$V_p = R_{eq1} I_1$$

or

$$V_p = V_{total} - V_1$$

$$V_p = 0.287V + 0.143V \sin(20t)$$

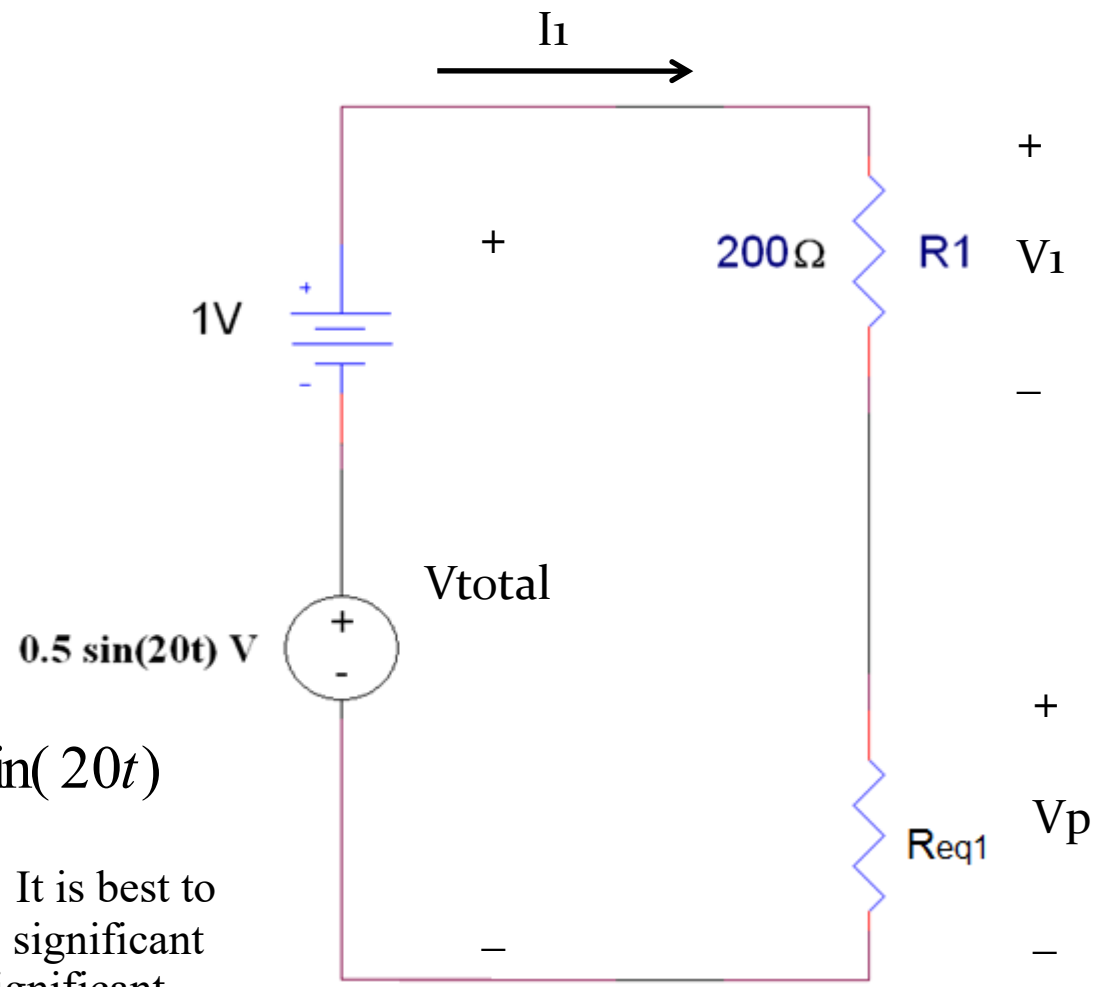


Note: rounding errors can occur. It is best to carry the calculations out to 5 or 6 significant figures and then reduce this to 3 significant figures when writing the final answer.

# …Example 05…

- Finally, use the original circuit to find I2 and I3.

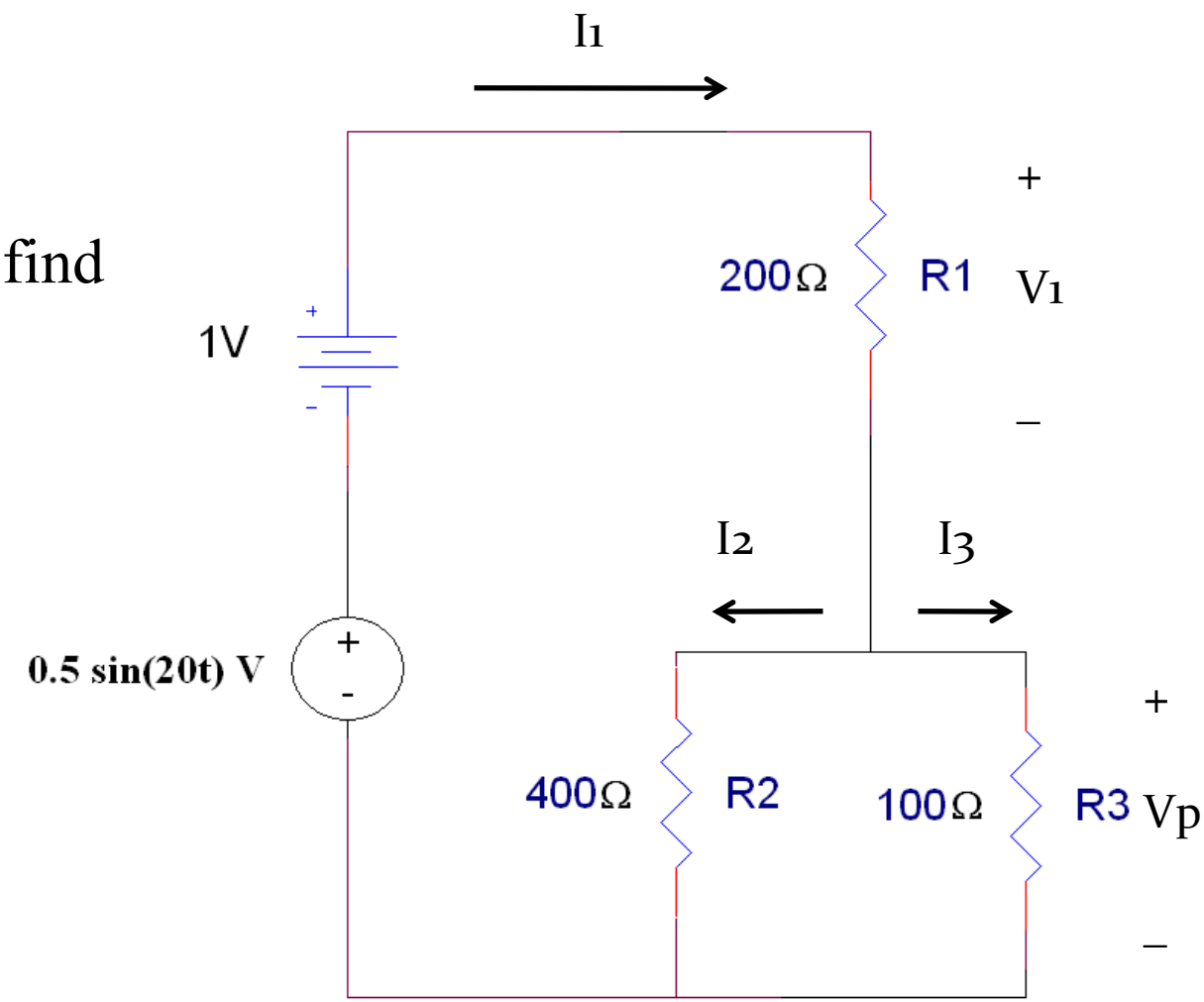


$$I_2 = \frac{R_3}{R_2 + R_3} I_1$$

or

$$I_2 = \frac{R_{eq1}}{R_2} I_1$$

$$I_2 = 0.714mA + 0.357mA\sin(20t)$$

# ...Example 05

- Lastly, the calculation for I3.

$$I_3 = \frac{R_2}{R_2 + R_3} I_1$$

or

$$I_3 = \frac{R_{eq1}}{R_3} I_1$$

or

$$I_3 = I_1 - I_2$$

$$I_3 = 2.86mA + 1.43mA\sin(20t)$$

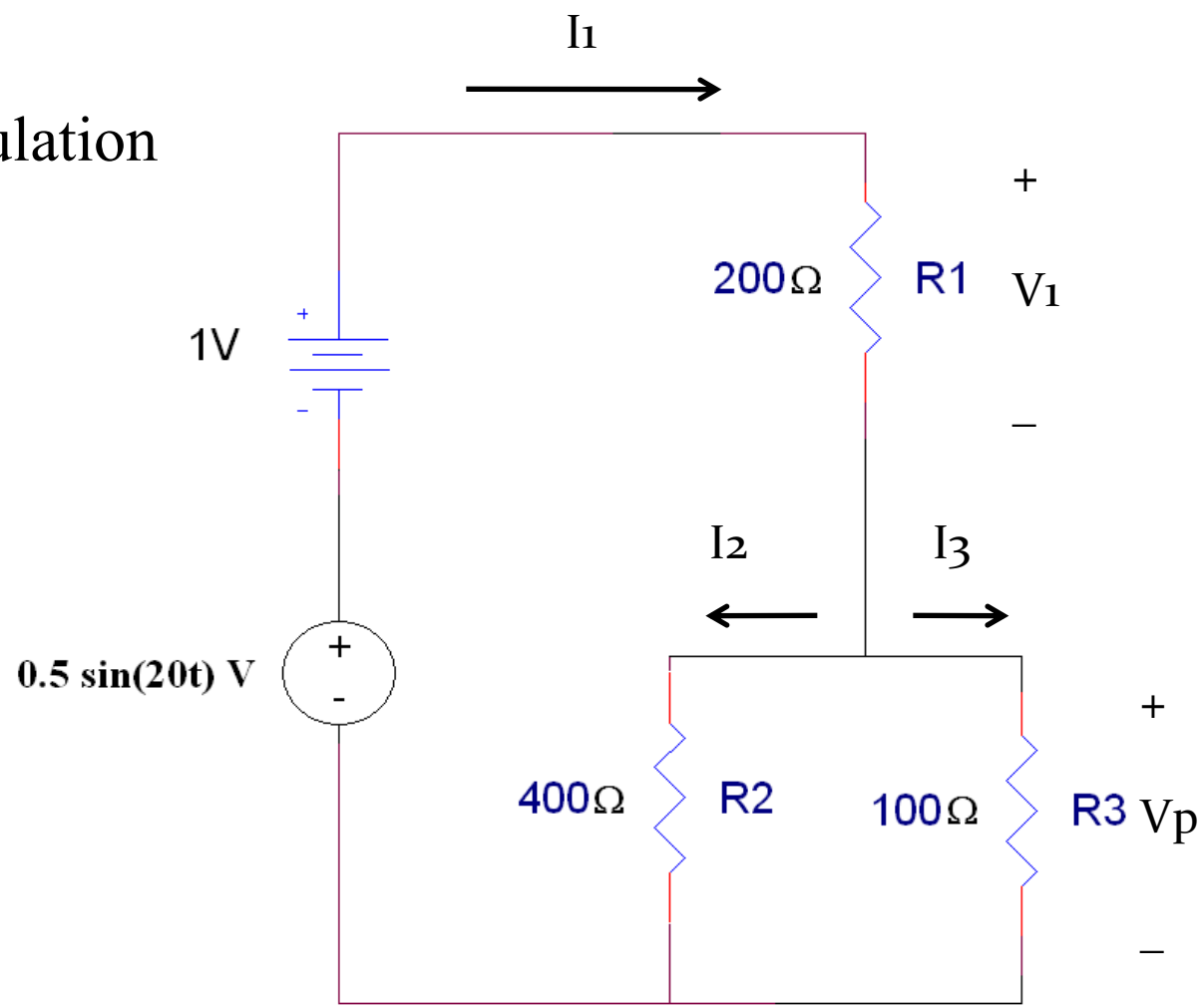

# Summary

- The equations used to calculate the voltage across a specific resistor $R_n$ in a set of resistors in series are:

$$V_n = \left[\frac{R_n}{R_{eq}}\right] V_{total}$$

$$V_n = \left[\frac{G_{eq}}{G_n}\right] V_{total}$$

- The equations used to calculate the current flowing through a specific resistor $R_m$ in a set of resistors in parallel are:

$$I_m = \frac{R_{eq}}{R_m} \mathrm{I}_{\mathrm{total}}$$

$$I_m = \frac{G_m}{G_{eq}} \mathrm{I}_{\mathrm{total}}$$

# Summary Table

| Series and Parallel Circuits | | |
|---|---|---|
| **Series** | **Duality** | **Parallel** |
| $R_T = R_1 + R_2 + R_3 + \cdots + R_N$ | $R \rightleftarrows G$ | $G_T = G_1 + G_2 + G_3 + \cdots + G_N$ |
| $R_T$ increases ($G_T$ decreases) if additional resistors are added in series | $R \rightleftarrows G$ | $G_T$ increases ($R_T$ decreases) if additional resistors are added in parallel |
| Special case: two elements<br>$R_T = R_1 + R_2$ | $R \rightleftarrows G$ | $G_T = G_1 + G_2$<br>and $R_T = \dfrac{1}{\dfrac{1}{R_1} + \dfrac{1}{R_2}} = \dfrac{R_1 R_2}{R_1 + R_2}$ |
| $I$ the same through series elements | $I \rightleftarrows V$ | $V$ the same across parallel elements |
| $E = V_1 + V_2 + V_3$ | $E, V \rightleftarrows I$ | $I_T = I_1 + I_2 + I_3$ |
| Largest $V$ across largest $R$ | $V \rightleftarrows I$ and $R \rightleftarrows G$ | Greatest $I$ through largest $G$ (smallest $R$) |
| $V_x = \dfrac{R_x E}{R_T}$ | $E, V \rightleftarrows I$ and $R \rightleftarrows G$ | $I_x = \dfrac{G_x I_T}{G_T} = \dfrac{R_T I_T}{R_x}$<br>with $I_1 = \dfrac{R_2 I_T}{R_1 + R_2}$ and $I_2 = \dfrac{R_1 I_T}{R_1 + R_2}$ |
| $P = EI_T$ | $E \rightleftarrows I$ and $I \rightleftarrows E$ | $P = I_T E$ |
| $P = I^2 R$ | $I \rightleftarrows V$ and $R \rightleftarrows G$ | $P = V^2 G = V^2/R$ |
| $P = V^2/R$ | $V \rightleftarrows I$ and $R \rightleftarrows G$ | $P = I^2/G = I^2 R$ |