BLM1033 - Circuit Theory and Electronics

The Instructors:

Doç. Dr. Hamza Osman İlhan
hoilhan@yildiz.edu.tr
Prof. Dr. Gökhan Bilgin
gbilgin@yildiz.edu.tr

Lab Assistants:

(Elektronik)	Arş. Gör. Burak Ahmet Özden
(Elektronik)	Arş. Gör. İdris Demir
(Devre)	Arş. Gör. Elif Aşıcı
(Devre)	Arş. Gör. Ömer Mutlu Türk Kaya
(Proje)	Arş. Gör. Barış Akkuş

Nodal and Mesh Analysis
SuperNode and SuperMesh

Objectives of Lecture

- Provide step-by-step instructions for nodal analysis, which is a method to calculate node voltages and currents that flow through components in a circuit.
- Provide step-by-step instructions for mesh analysis, which is a method to calculate voltage drops and mesh currents that flow around loops in a circuit.

Mathematical Preliminaries

- Consider the following equations, where x and y are the unknown variables and a_1, a_2, b_1, b_2, c_1, and c_2 are constants:

$$(1) \qquad a_1 x + b_1 y = c_1$$

$$(2) \qquad a_2 x + b_2 y = c_2$$

- Solution by substitution
  - Rearrange (1)

$$a_1 x + b_1 y = c_1 \rightarrow x = \frac{c_1 - b_1 y}{a_1}$$

  - Substitute x into (2) to obtain y

$$a_2 \frac{c_1 - b_1 y}{a_1} + b_2 y = c_2 \rightarrow y = \frac{a_1 c_2 - a_2 c_1}{a_1 b_2 - a_2 b_1}$$

  - Find x

$$x = \frac{c_1}{a_1} - \frac{b_1}{a_1} \times \frac{a_1 c_2 - a_2 c_1}{a_1 b_2 - a_2 b_1} \rightarrow x = \frac{b_1 c_2 - b_2 c_1}{a_1 b_2 - a_2 b_1}$$

Mathematical Preliminaries

- Solution by Determinant:
  - Rearrange (1) and (2) into matrix form

$$\begin{bmatrix} a_1 & b_1 \\ a_2 & b_2 \end{bmatrix} \times \begin{bmatrix} x \\ y \end{bmatrix} = \begin{bmatrix} c_1 \\ c_2 \end{bmatrix}$$

  - Determinants are:

$$\mathrm{D} = \begin{vmatrix} a_1 & b_1 \\ a_2 & b_2 \end{vmatrix} = a_1 b_2 - a_2 b_1$$

$$\mathrm{D}_x = \begin{vmatrix} c_1 & b_1 \\ c_2 & b_2 \end{vmatrix} = c_1 b_2 - c_2 b_1$$

$$\mathrm{D}_y = \begin{vmatrix} a_1 & c_1 \\ a_2 & c_2 \end{vmatrix} = a_1 c_2 - a_2 c_1$$

Mathematical Preliminaries

- Using determinats, the following solutions for x and y can be found

$$x = \frac{\mathrm{D}_x}{\mathrm{D}} = \frac{\begin{vmatrix} c_1 & b_1 \\ c_2 & b_2 \end{vmatrix}}{\begin{vmatrix} a_1 & b_1 \\ a_2 & b_2 \end{vmatrix}} = \frac{c_1 b_2 - b_1 c_2}{a_1 b_2 - a_2 b_1}$$

$$y = \frac{\mathrm{D}_y}{\mathrm{D}} = \frac{\begin{vmatrix} a_1 & c_1 \\ a_2 & c_2 \end{vmatrix}}{\begin{vmatrix} a_1 & b_1 \\ a_2 & b_2 \end{vmatrix}} = \frac{a_1 c_2 - a_2 c_1}{a_1 b_2 - a_2 b_1}$$

Mathematical Preliminaries

- Consider the three following simultaneous equations:

Col. 1		Col. 2		Col. 3		Col. 4
a_1x	$+$	b_1y	$+$	c_1z	$=$	d_1
a_2x	$+$	b_2y	$+$	c_2z	$=$	d_2
a_3x	$+$	b_3y	$+$	c_3z	$=$	d_3

$$x = \frac{\begin{vmatrix} d_1 & b_1 & c_1 \\ d_2 & b_2 & c_2 \\ d_3 & b_3 & c_3 \end{vmatrix}}{D}, \quad y = \frac{\begin{vmatrix} a_1 & d_1 & c_1 \\ a_2 & d_2 & c_2 \\ a_3 & d_3 & c_3 \end{vmatrix}}{D}, \quad z = \frac{\begin{vmatrix} a_1 & b_1 & d_1 \\ a_2 & b_2 & d_2 \\ a_3 & b_3 & d_3 \end{vmatrix}}{D}$$

$$D = \begin{vmatrix} a_1 & b_1 & c_1 \\ a_2 & b_2 & c_2 \\ a_3 & b_3 & c_3 \end{vmatrix}$$

$$D = \left|\begin{array}{ccc|cc} a_1 & b_1 & c_1 & a_1 & b_1 \\ a_2 & b_2 & c_2 & a_2 & b_2 \\ a_3 & b_3 & c_3 & a_3 & b_3 \end{array}\right.$$

4(−) 5(−) 6(−)

1(+) 2(+) 3(+)

$$D = \boxed{+\,(a_1b_2c_3 + b_1c_2a_3 + c_1a_2b_3) - (a_3b_2c_1 + b_3c_2c_1 + c_3a_2b_1)}$$

Nodal Analysis

- Technique to find currents at a node using Ohm's Law and the potential differences betweens nodes.
  - First result from nodal analysis is the determination of node voltages (voltage at nodes referenced to ground).
    - These voltages are not equal to the voltage dropped across the resistors.
  - Second result is the calculation of the currents

Steps in Nodal Analysis

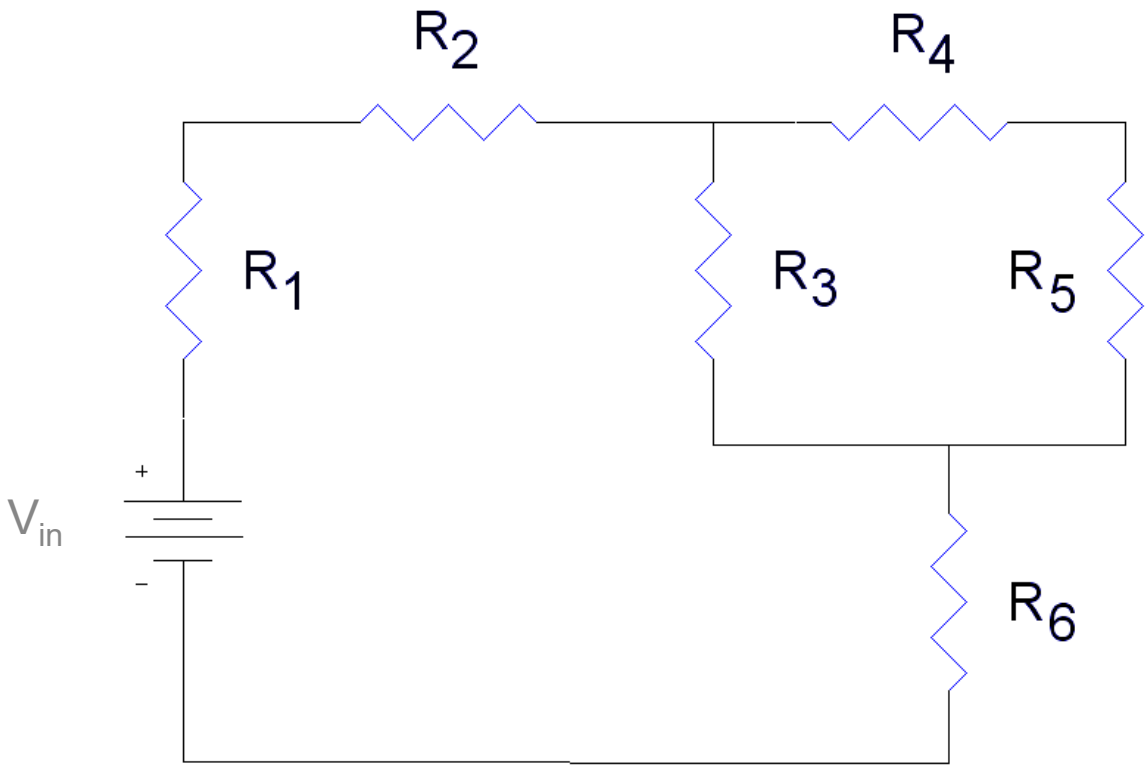

Steps in Nodal Analysis

- Pick one node as a reference node
  - Its voltage will be arbitrarily defined to be zero

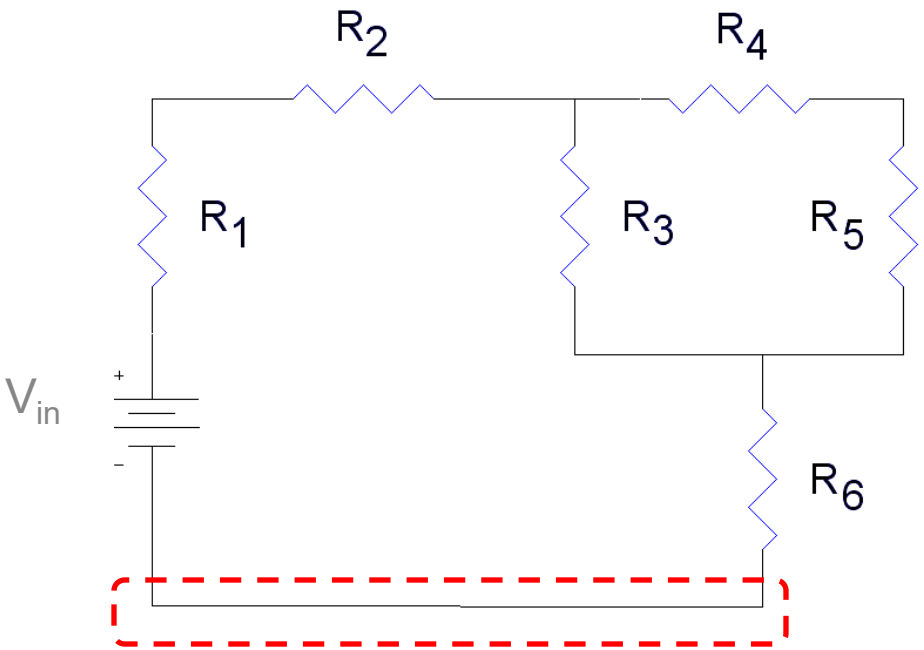

Step 1

- Pick one node as a reference node
  - Its voltage will be arbitrarily defined to be zero

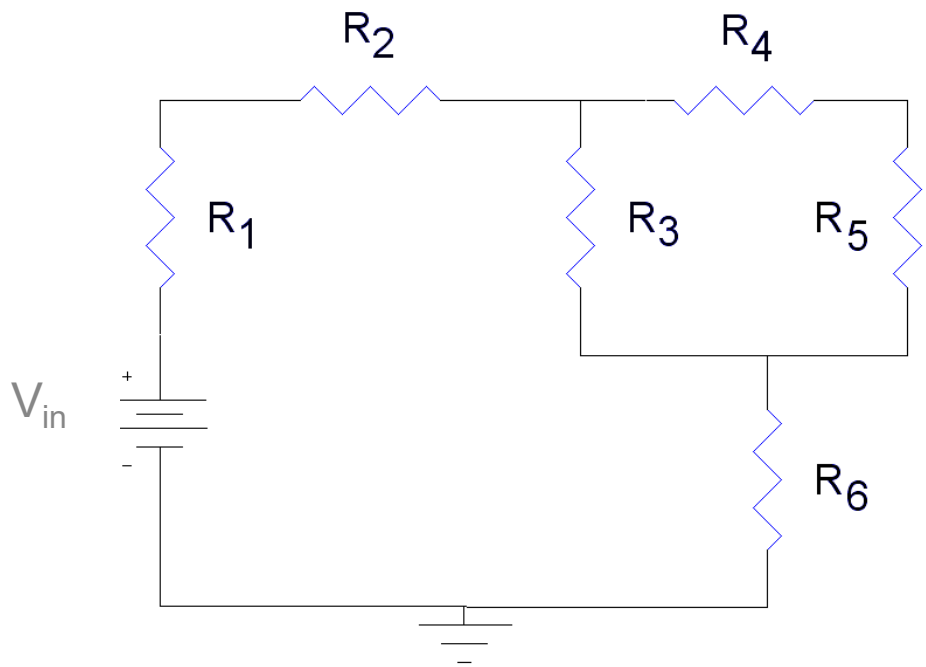

Step 2

- Label the voltage at the other nodes

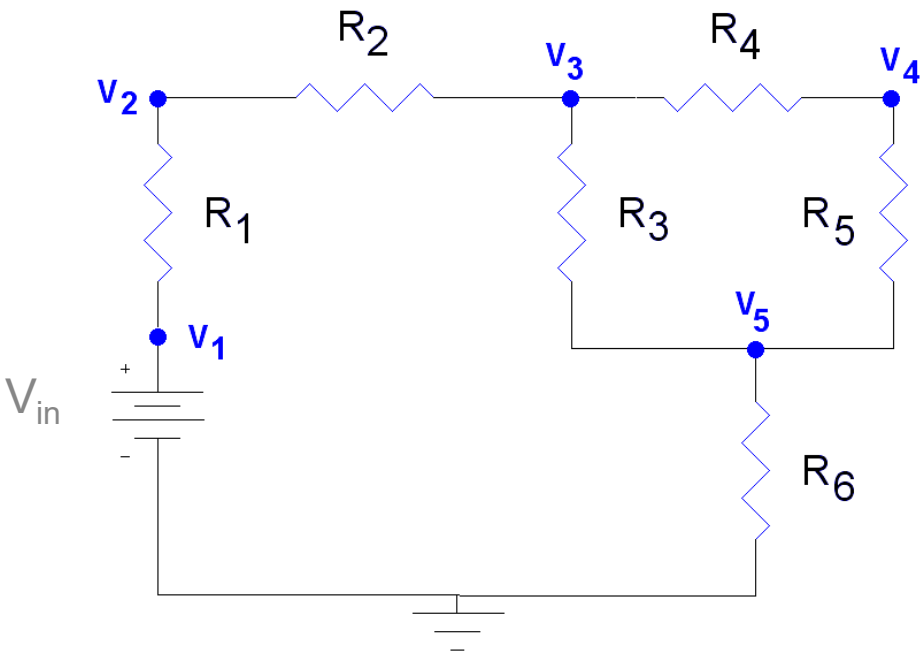

Step 3

- Label the currents flowing through each of the components in the circuit

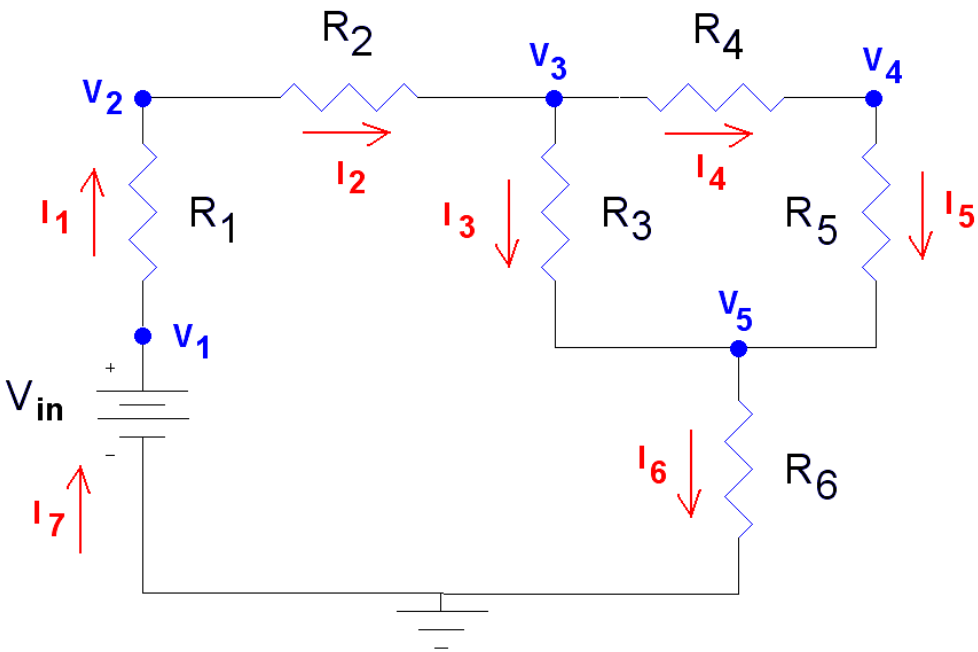

Step 4

- Use Kirchoff's Current Law

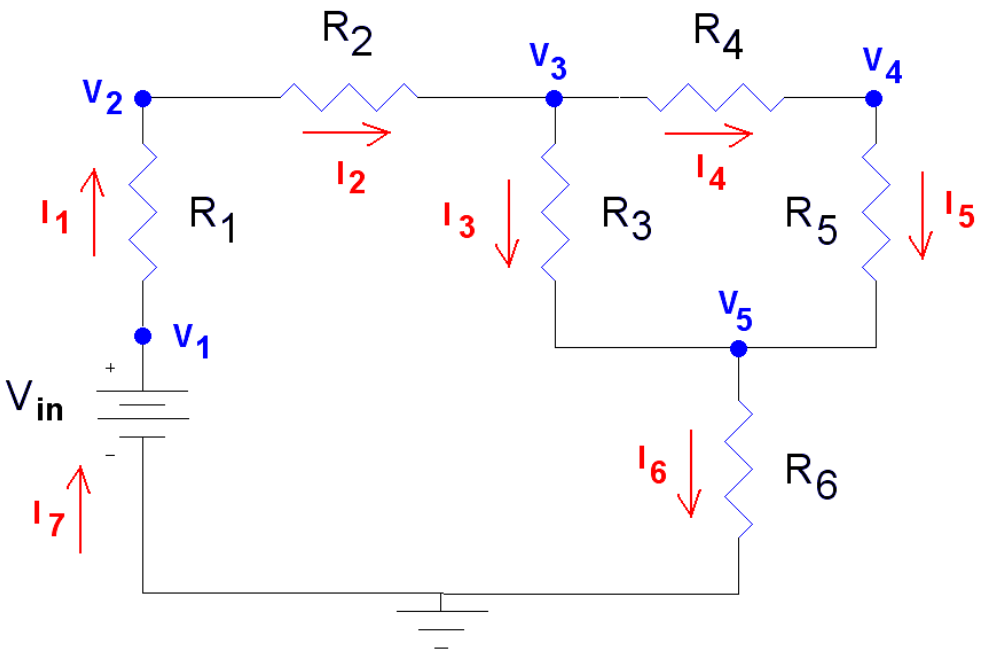

$$I_7 = I_1 = I_2 = I_6$$

$$I_2 = I_3 + I_4$$

$$I_4 = I_5$$

Step 5

- Use Ohm's Law to relate the voltages at each node to the currents flowing in and out of them.
  - Current flows from a higher potential to a lower potential in a resistor
    - The difference in node voltage is the magnitude of electromotive force that is causing a current I to flow.

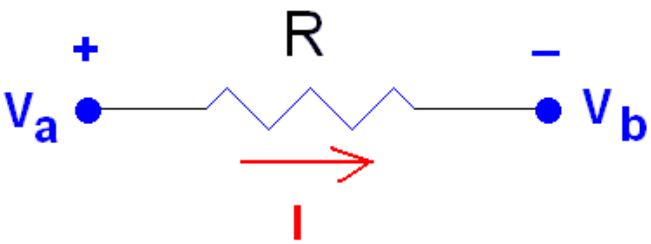

$$I = (V_a - V_b)/R$$

Step 5

- We do not write an equation for I_7 as it is equal to I_1

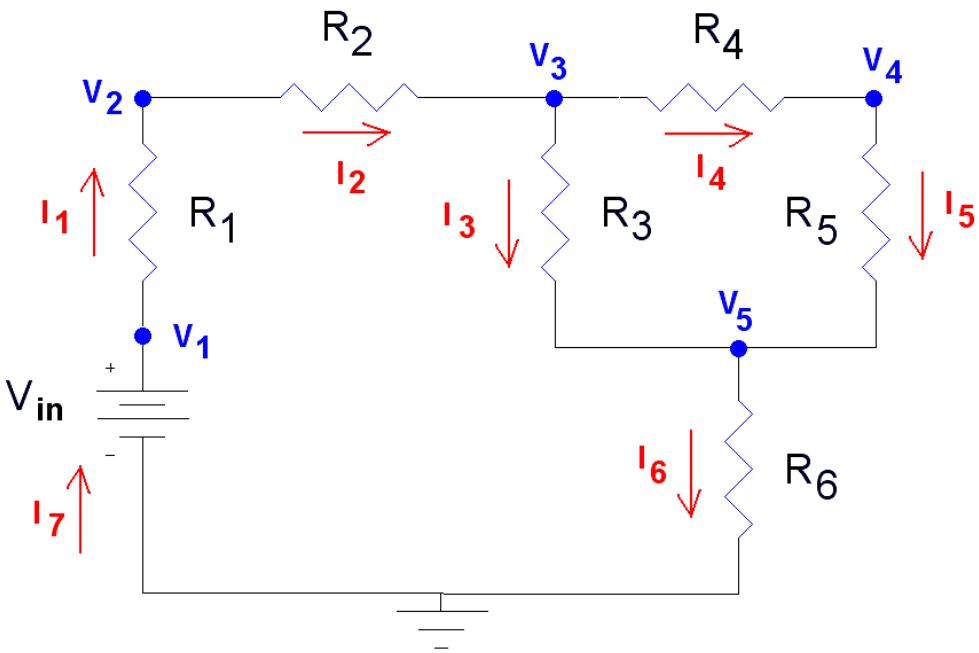

$$I_1 = (V_1 - V_2)/R_1$$
$$I_2 = (V_2 - V_3)/R_2$$
$$I_3 = (V_3 - V_5)/R_3$$
$$I_4 = (V_3 - V_4)/R_4$$
$$I_5 = (V_4 - V_5)/R_5$$
$$I_6 = (V_5 - 0\text{V})/R_6$$

Step 6

- Solve for the node voltages
  - In this problem we know that $V_1 = V_{in}$

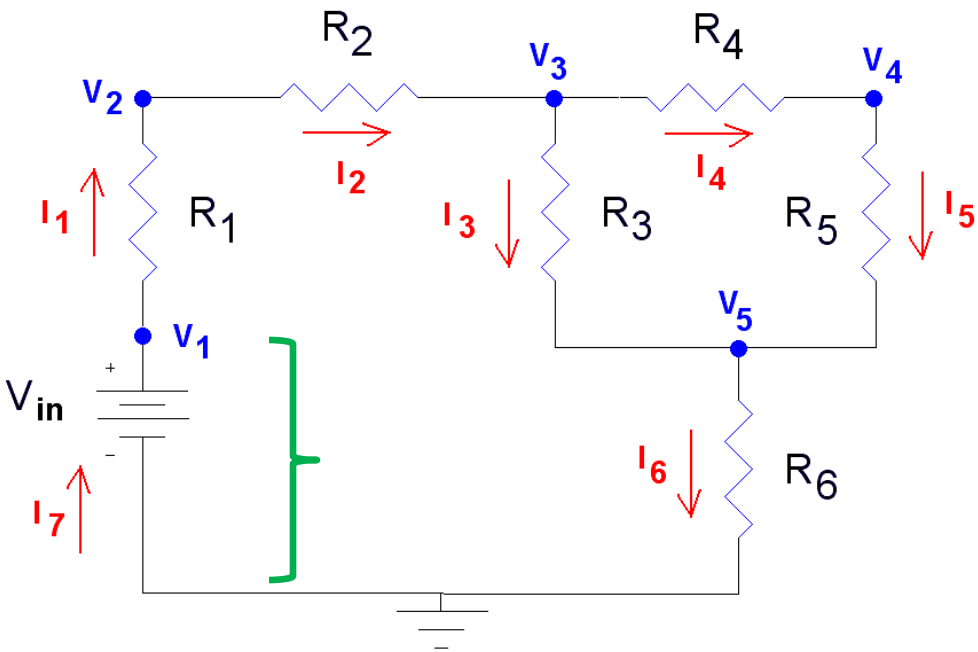

Example 01…

- Once the node voltages are known, calculate the currents.

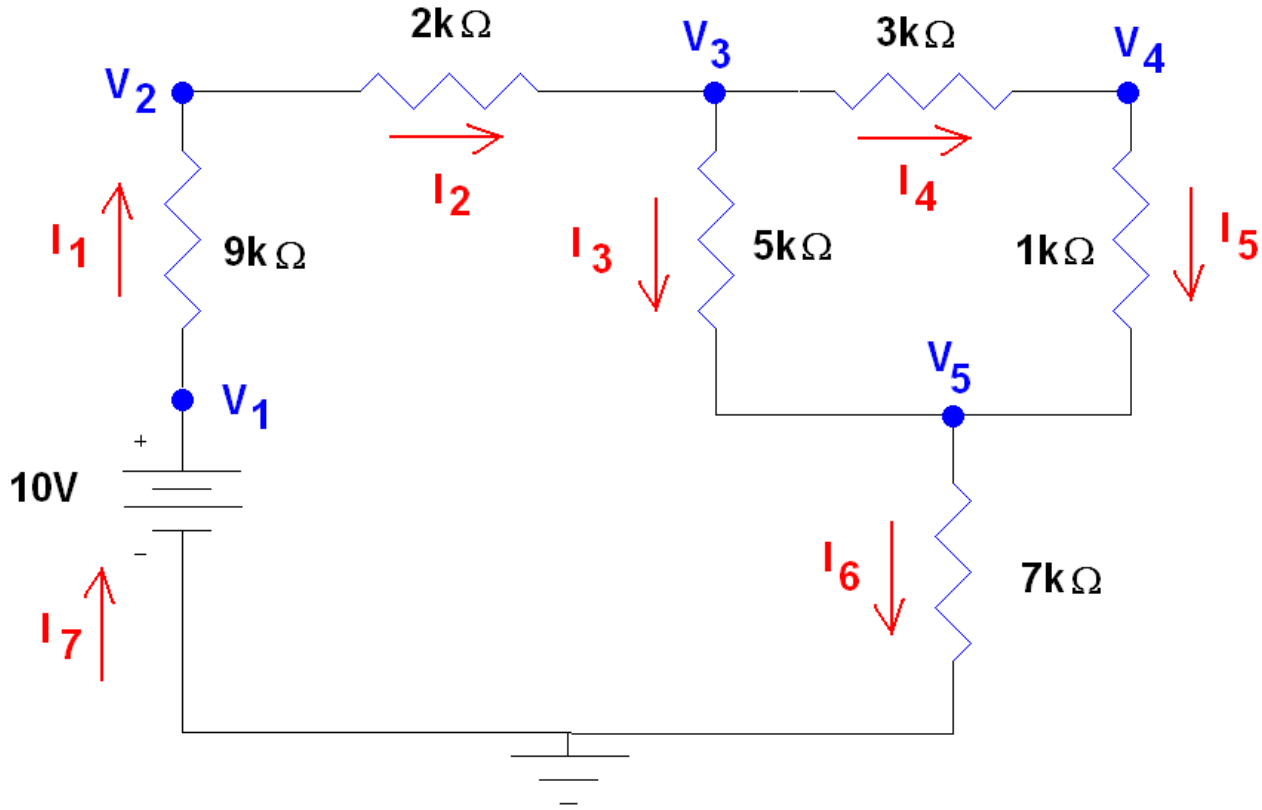

…Example 01…

- From Previous Slides

$$I_7 = I_1 = I_2 = I_6$$
$$I_2 = I_3 + I_4$$
$$I_4 = I_5$$

$$V_1 = \mathrm{V_{in}}$$

$$I_1 = (V_1 - V_2)/R_1$$
$$I_2 = (V_2 - V_3)/R_2$$
$$I_3 = (V_3 - V_5)/R_3$$
$$I_4 = (V_3 - V_4)/R_4$$
$$I_5 = (V_4 - V_5)/R_5$$
$$I_6 = (V_5 - 0\mathrm{V})/R_6$$

…Example 01…

- Substituting in Numbers

$$I_7 = I_1 = I_2 = I_6$$
$$I_2 = I_3 + I_4$$
$$I_4 = I_5$$

$$V_1 = 10\text{V}$$

$$I_1 = (10\text{V} - V_2)/9k\Omega$$
$$I_2 = (V_2 - V_3)/2k\Omega$$
$$I_3 = (V_3 - V_5)/5k\Omega$$
$$I_4 = (V_3 - V_4)/3k\Omega$$
$$I_5 = (V_4 - V_5)/1k\Omega$$
$$I_6 = (V_5 - 0\text{V})/7k\Omega$$

…Example 01…

- Substituting the results from Ohm's Law into the KCL equations

$$\left(10\text{V} - V_2\right)/9k\Omega = \left(V_2 - V_3\right)/2k\Omega = V_5/7k\Omega$$

$$\left(V_2 - V_3\right)/2k\Omega = \left(V_3 - V_5\right)/5k\Omega + \left(V_3 - V_4\right)/3k\Omega$$

$$\left(V_3 - V_4\right)/3k\Omega = \left(V_4 - V_5\right)/1k\Omega$$

…Example 01…

Node Voltages	(V)
V_1	10
V_2	5.55
V_3	4.56
V_4	3.74
V_5	3.46

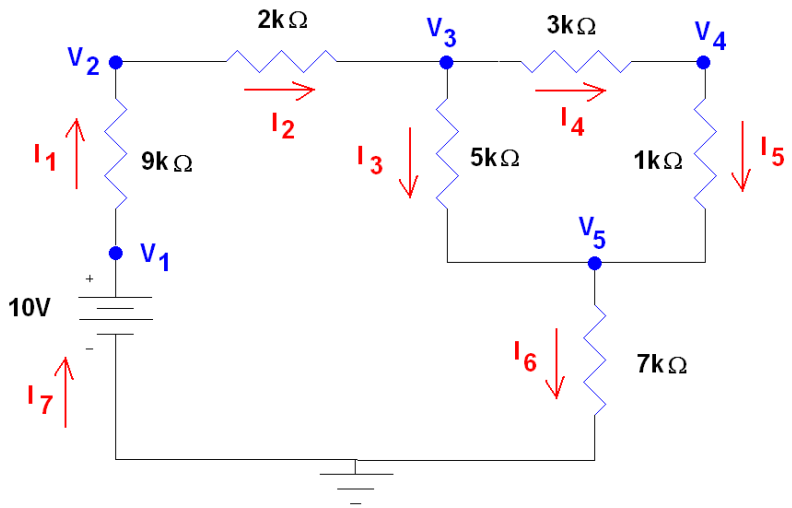

- Node voltages must have a magnitude less than the sum of the voltage sources in the circuit
- One or more of the node voltages may have a negative sign
  - This depends on which node you chose as your reference node.

…Example 01…

Voltage across resistors	(V)
$V_{R1} = (V_1 - V_2)$	4.45
$V_{R2} = (V_2 - V_3)$	0.990
$V_{R3} = (V_3 - V_5)$	1.10
$V_{R4} = (V_3 - V_4)$	0.824
$V_{R5} = (V_4 - V_5)$	0.274
$V_{R6} = (V_5 - 0V)$	3.46

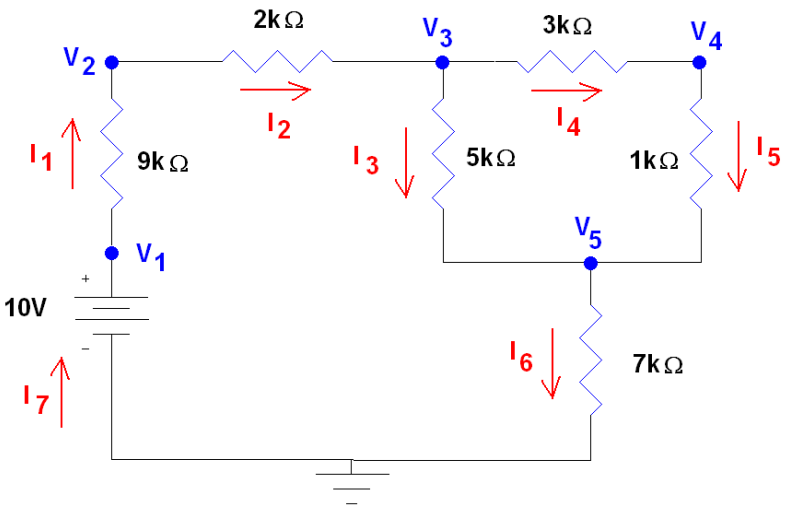

- The magnitude of any voltage across a resistor must be less than the sum of all of the voltage sources in the circuit
  - In this case, no voltage across a resistor can be greater than 10 V.

…Example 01

Currents	(μA)
I_1	495
I_2	495
I_3	220
I_4	275
I_5	275
I_6	495
I_7	495

- None of the currents should be larger than the current that flows through the equivalent resistor in series with the 10V supply.

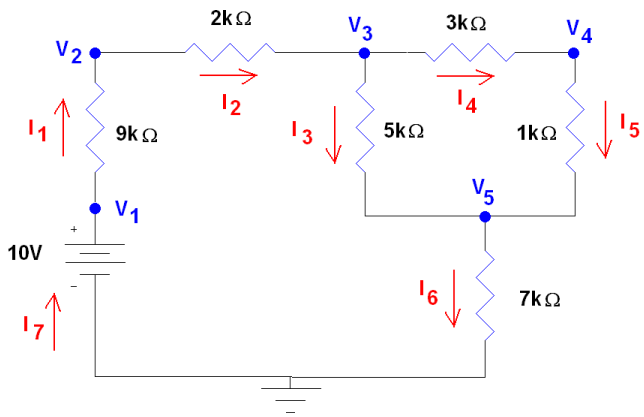

$R_{eq} = 7+[5||(1+3)]+2+9 = 20.2\ k\Omega$

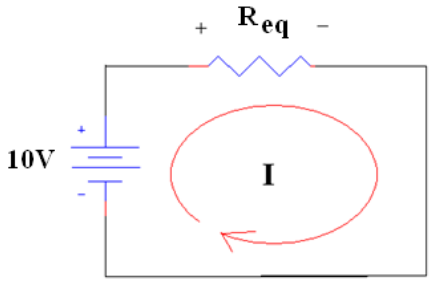

$I_{eq} = 10 / R_{eq} = 10\ V/ 20.2\ k\Omega = 495\ \mu A$

Summary

- Steps in Nodal Analysis
  1. Pick one node as a reference node
  2. Label the voltage at the other nodes
  3. Label the currents flowing through each of the components in the circuit
  4. Use Kirchoff's Current Law
  5. Use Ohm's Law to relate the voltages at each node to the currents flowing in and out of them.
  6. Solve for the node voltage
  7. Once the node voltages are known, calculate the currents.

Example 02…

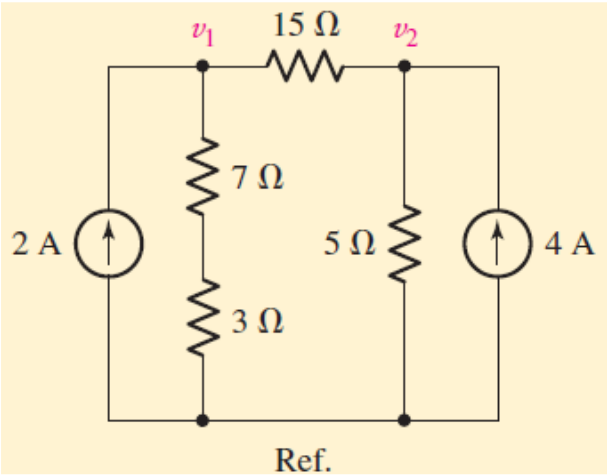

- Determine the current flowing left to right through the 15 ohms resistor.

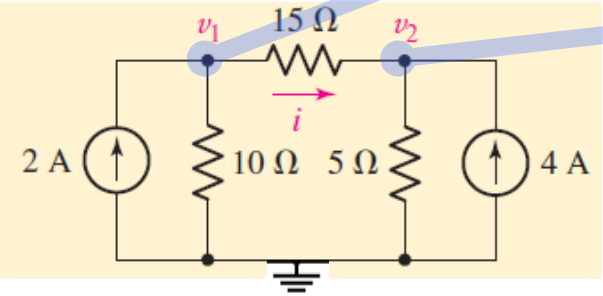

$$2 = \frac{v_1}{10} + \frac{v_1 - v_2}{15} \qquad 5v_1 - 2v_2 = 60$$

$$4 = \frac{v_2}{5} + \frac{v_2 - v_1}{15} \qquad -v_1 + 4v_2 = 60$$

$$v_1 = 20 \text{ V} \qquad v_2 = 20 \text{ V} \qquad v_1 - v_2 = 0$$

zero current is flowing through the 15 Ω

…Example 02…

- Two equations with two unknown variables (v_1, v_2)

$$(1) \quad 5v_1 - 2v_2 = 60$$

$$(2) \quad -v_1 + 4v_2 = 60$$

- Solution by substitution
  - Rearrange (2)

$$-v_1 + 4v_2 = 60 \rightarrow v_1 = 4v_2 - 60$$

  - Substitute v_1 into (1) to obtain v_2

$$5(4v_2 - 60) + 4v_2 = 60 \rightarrow 18v_2 = 360 \rightarrow v_2 = 20 \text{ V}$$

  - Find v_1

$$v_1 = 4v_2 - 60 = 80 - 60 \rightarrow v_1 = 20 \text{ V}$$

…Example 02

- Two equations with two unknown variables (v_1, v_2)

$$(1) \qquad 5v_1 - 2v_2 = 60$$

$$(2) \qquad -v_1 + 4v_2 = 60$$

- Solution by determinant

$$v_1 = \frac{\begin{vmatrix} 60 & -2 \\ 60 & 4 \end{vmatrix}}{\begin{vmatrix} 5 & -2 \\ -1 & 4 \end{vmatrix}} = \frac{60 \times 4 - 60 \times (-2)}{5 \times 4 - (-1) \times (-2)} = \frac{360}{18} = 20 \text{ V}$$

$$v_2 = \frac{\begin{vmatrix} 5 & 60 \\ -1 & 60 \end{vmatrix}}{\begin{vmatrix} 5 & -2 \\ -1 & 4 \end{vmatrix}} = \frac{5 \times 60 - (-1) \times 60}{5 \times 4 - (-1) \times (-2)} = \frac{360}{18} = 20 \text{ V}$$

Nodal Analysis with Supernodes

- Floating voltage source

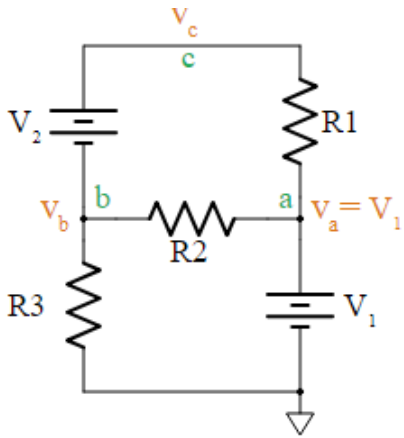

  - a voltage source that does not have either of its terminals connected to the ground node.
  - A floating source is a problem for the Nodal Analysis
    - In this circuit, battery V_2 is floating
  - Applying Nodal Analysis

$$v_a = V_1 \qquad i_{R2} + i_{R_3} + i_{V_2} = 0 \qquad \frac{(v_a - v_b)}{R2} - \frac{v_b}{R3} + i_{V_2}? = 0$$

- Using Supernode

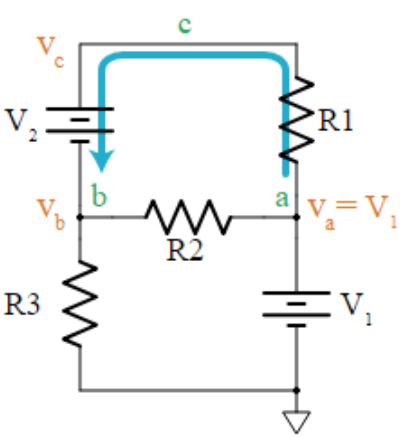

  - The voltage at node *c* $\quad v_c = v_b + V_2.$
  - battery current $\quad \dfrac{V_1 - v_c}{R1} \qquad \dfrac{V_1 - (v_b + V_2)}{R1}$
  - the KCL equation at node *b*

$$\frac{(V_1 - v_b)}{R2} - \frac{v_b}{R3} + \frac{V_1 - (v_b + V_2)}{R1} = 0 \qquad v_c = v_b + V_2$$

  - to find currents, Ohm's Law can be used

Nodal Analysis with Supernodes

supernode:
a collection of multiple nodes separated by voltage sources

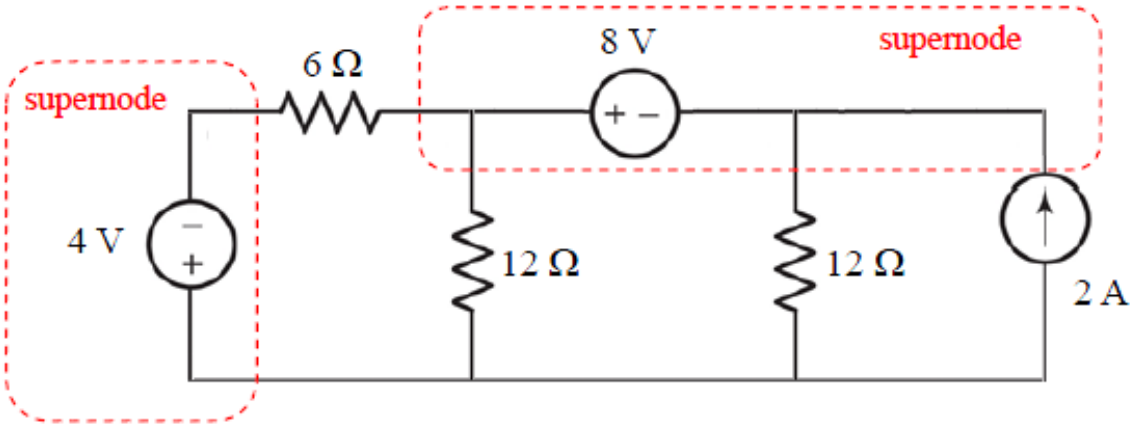

Analysis Steps

(1) Choose a reference node (usually ground or the bottom node) to have a voltage of *zero*.

(2) Assign a unique voltage variable to each node that is *not* the reference (v_1, v_2, v_3, … v_{N-1}).

(3) For independent & dependent voltage sources, identify a *supernode* and write the voltage across the supernode in terms of node voltages.

Write a KCL equation *at all N – 1 nodes* ***including the supernode*** (and not the reference, or a supernode which includes the reference).

(4) Solve the $N - 1$ node equations + source equations simultaneously.

Example 03…

- Determine the node-to-reference voltages in the circuit provided.
  - identify the nodes & supernodes
  - write KCL at each node (except the reference)

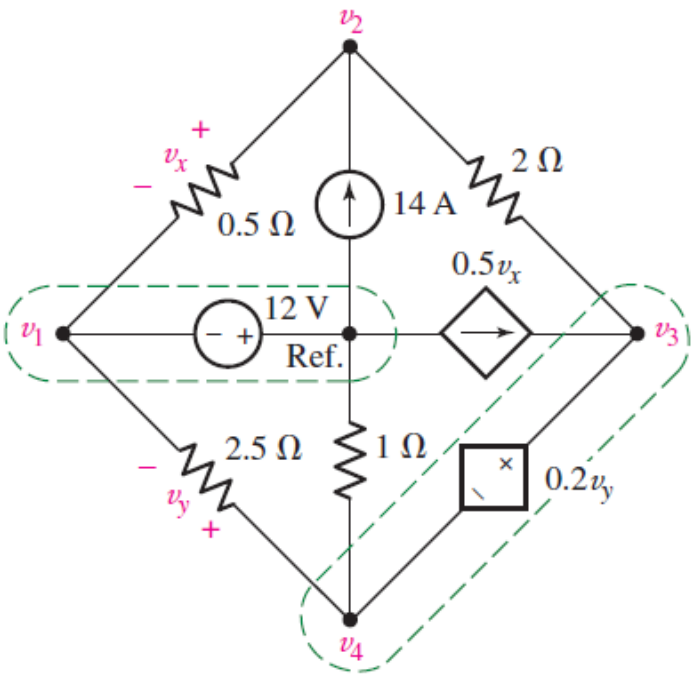

$$v_1 = -12 \text{ V}$$

$$\frac{v_2 - v_1}{0.5} + \frac{v_2 - v_3}{2} = 14$$

$$0.5v_x = \frac{v_3 - v_2}{2} + \frac{v_4}{1} + \frac{v_4 - v_1}{2.5}$$

…Example 03

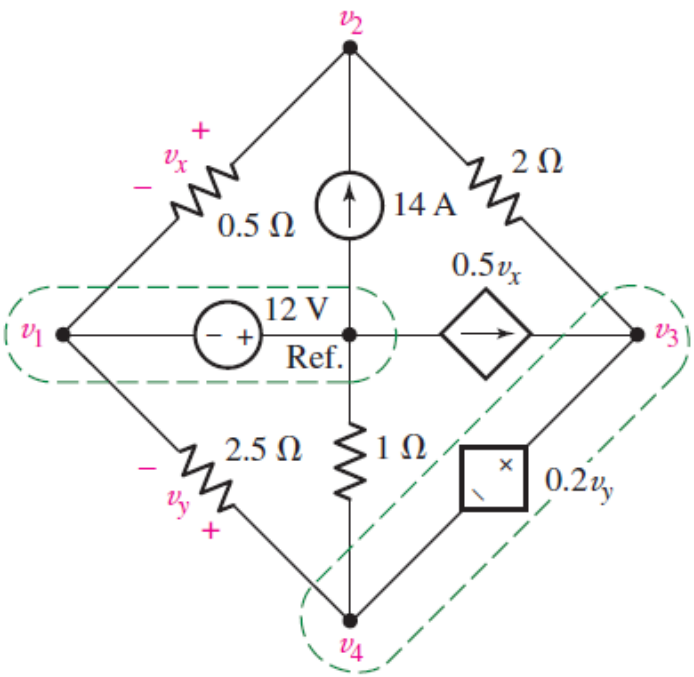

- When we relate the source voltages to the node voltages

$$v_3 - v_4 = 0.2v_y$$

$$0.2v_y = 0.2(v_4 - v_1)$$

- When we express the dependent current source in terms of the assigned variables

$$0.5v_x = 0.5(v_2 - v_1)$$

$$\begin{aligned}
-2v_1 + 2.5v_2 - 0.5v_3 \qquad\qquad &= 14 \\
0.1v_1 - \quad v_2 + 0.5v_3 + 1.4v_4 &= 0 \\
v_1 \qquad\qquad\qquad\qquad\qquad &= -12 \\
0.2v_1 \qquad\qquad + \quad v_3 - 1.2v_4 &= 0
\end{aligned}$$

$v_1 = -12$ V, $v_2 = -4$ V, $v_3 = 0$ V, and $v_4 = -2$ V.

Mesh Analysis

- Technique to find voltage drops within a loop using the currents that flow within the circuit and Ohm's Law
  - First result is the calculation of the current through each component
  - Second result is a calculation of either the voltages across the components or the voltage at the nodes.
- Mesh
  - the smallest loop around a subset of components in a circuit
    - Multiple meshes are defined so that every component in the circuit belongs to one or more meshes

Mesh Analysis

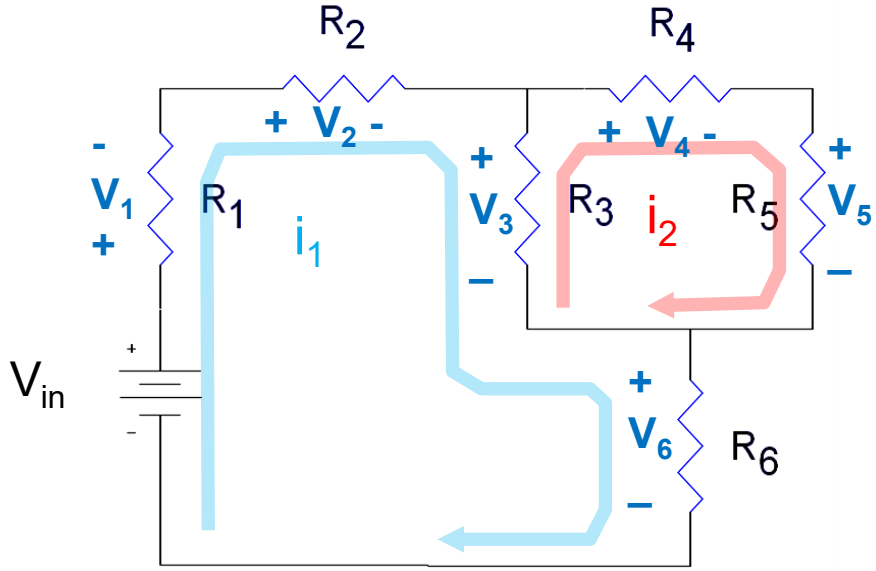

- Identify all of the meshes in the circuit
- Label the currents flowing in each mesh
- Label the voltage across each component in the circuit

- Use Kirchoff's Voltage Law

$$-V_{in} + V_1 + V_2 + V_3 + V_6 = 0$$

$$-V_3 + V_4 + V_5 = 0$$

Mesh Analysis

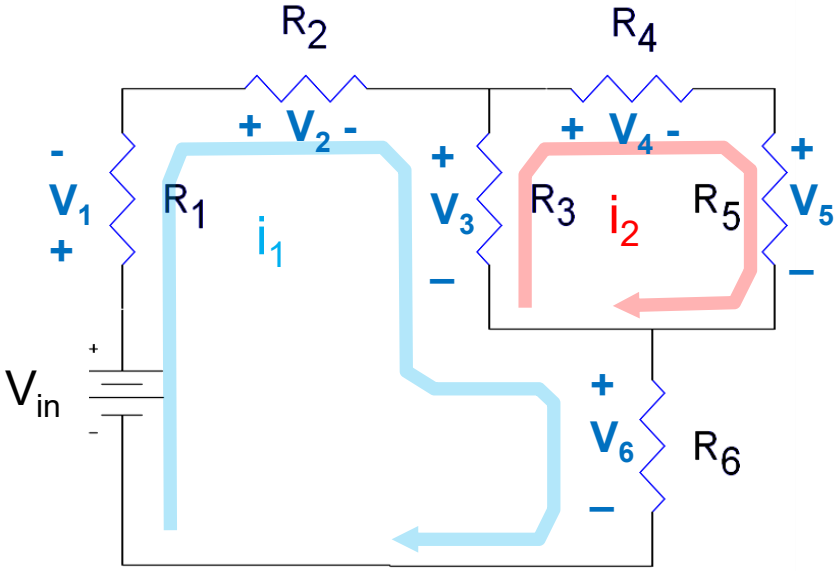

- Use Ohm's Law to relate the voltage drops across each component to the sum of the currents flowing through them.

– Follow the sign convention on the resistor's voltage.

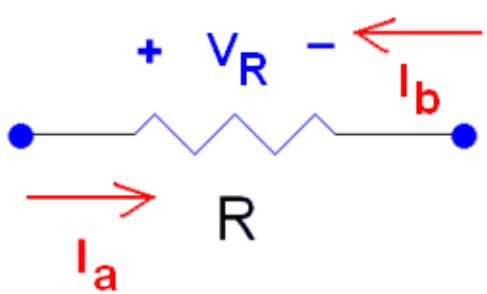

$$V_R = (I_a - I_b)R$$

Mesh Analysis

- Voltage drops on the resistors:

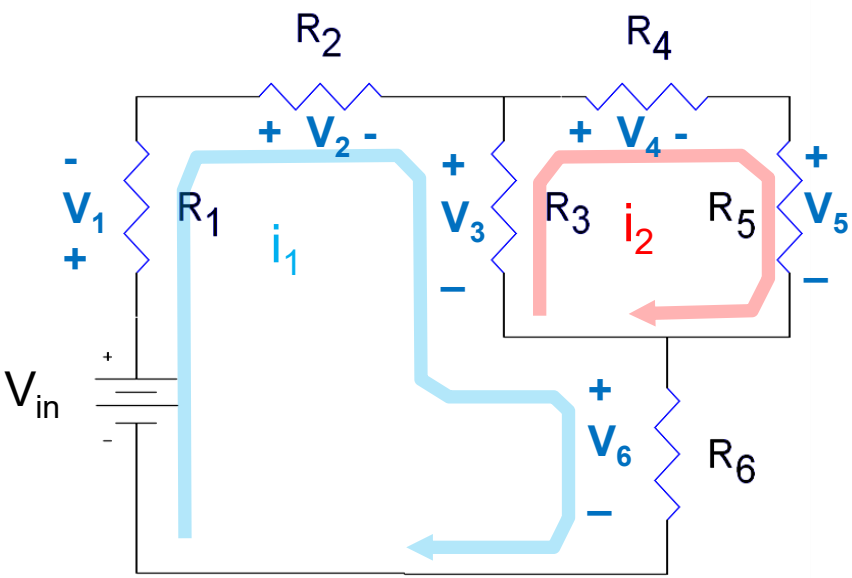

$$V_1 = i_1 R_1$$

$$V_2 = i_1 R_2$$

$$V_3 = (i_1 - i_2) R_3$$

$$V_4 = i_2 R_4$$

$$V_5 = i_2 R_5$$

$$V_6 = i_1 R_6$$

Mesh Analysis

- Solve for the mesh currents, i_1 and i_2

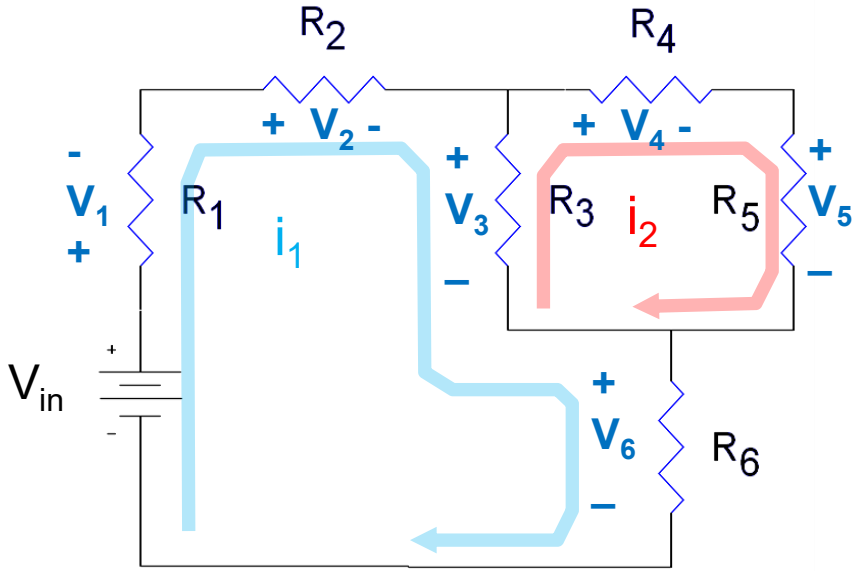

  - These currents are related to the currents found during the nodal analysis.
    - $i_1 = I_7 = I_1 = I_2 = I_6$
    - $i_2 = I_4 = I_5$
    - $I_3 = i_1 - i_2$

- Once the voltage across all of the components are known, calculate the mesh currents.

Example 04…

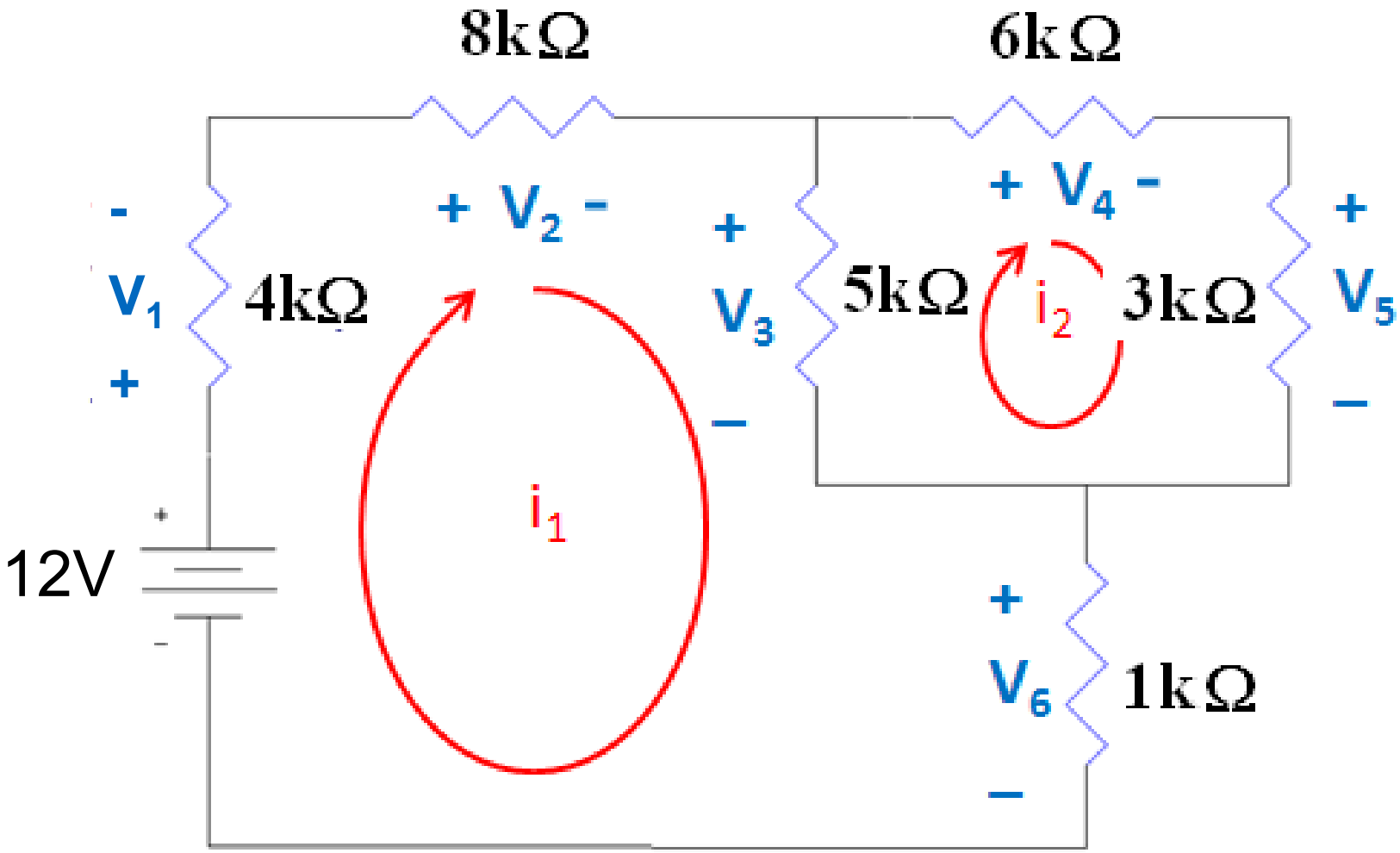

…Example 04…

- From Previous Slides

$$-V_{in} + V_1 + V_2 + V_3 + V_6 = 0$$

$$-V_3 + V_4 + V_5 = 0$$

$$V_1 = i_1 R_1$$

$$V_2 = i_1 R_2$$

$$V_3 = (i_1 - i_2) R_3$$

$$V_4 = i_2 R_4$$

$$V_5 = i_2 R_5$$

$$V_6 = i_1 R_6$$

…Example 03…

- Substituting the results from Ohm's Law into the KVL equations

$$-12 + V_1 + V_2 + V_3 + V_6 = 0$$
$$-V_3 + V_4 + V_5 = 0$$

$$V_1 = i_1(4k\Omega)$$
$$V_2 = i_1(8k\Omega)$$
$$V_3 = (i_1 - i_2)(5k\Omega)$$
$$V_4 = i_2(6k\Omega)$$
$$V_5 = i_2(3k\Omega)$$
$$V_6 = i_1(1k\Omega)$$

will result in:

Mesh Currents	(μA)
i_1	740
i_2	264

…Example 04…

Voltage across resistors	(V)
$V_{R1} = i_1 R_2$	2.96
$V_{R2} = i_2 R_2$	5.92
$V_{R3} = (i_1 - i_2) R_3$	2.39
$V_{R4} = i_2 R_4$	1.59
$V_{R5} = (V_4 - V_5)$	0.804
$V_{R6} = (V_5 - 0V)$	0.740

- The magnitude of any voltage across a resistor must be less than the sum of all of the voltage sources in the circuit
  - In this case, no voltage across a resistor can be greater than 12V.

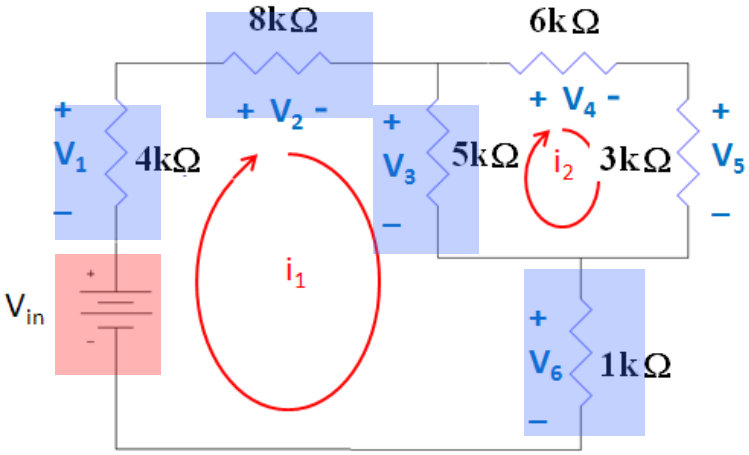

$V_{in} = V_1 + V_2 + V_3 + V_6$

$12 = 2.96 + 5.92 + 2.39 + 0.74$

$12\ V = 12.01\ V$

0.01 V difference is caused by rounding error

…Example 04

Currents	(μA)
$I_{R1} = i_1$	740
$I_{R2} = i_1$	740
$I_{R3} = i_1 - i_2$	476
$I_{R4} = i_2$	264
$I_{R5} = i_2$	264
$I_{R6} = i_1$	740
$I_{Vin} = i_1$	740

- None of the mesh currents should be larger than the current that flows through the equivalent resistor in series with the 12V supply.

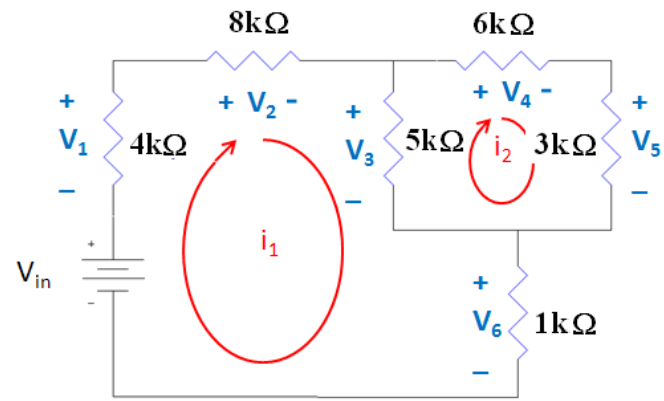

$R_{eq} = 1+[5||(3+6)]+8+4 = 16.2\ k\Omega$

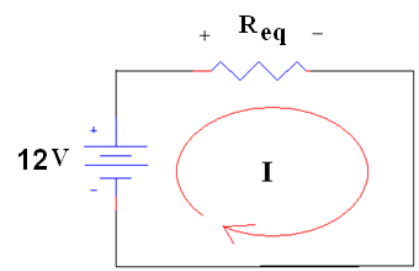

$I_{eq} = 12 / R_{eq} = 12\ V / 16.2\ k\Omega = 740\ \mu A$

Summary

- Steps in Mesh Analysis
  1. Identify all of the meshes in the circuit
  2. Label the currents flowing in each mesh
  3. Label the voltage across each component in the circuit
  4. Use Kirchoff's Voltage Law
  5. Use Ohm's Law to relate the voltage drops across each component to the sum of the currents flowing through them.
  6. Solve for the mesh currents
  7. Once the voltage across all of the components are known, calculate the mesh currents.

Example 05

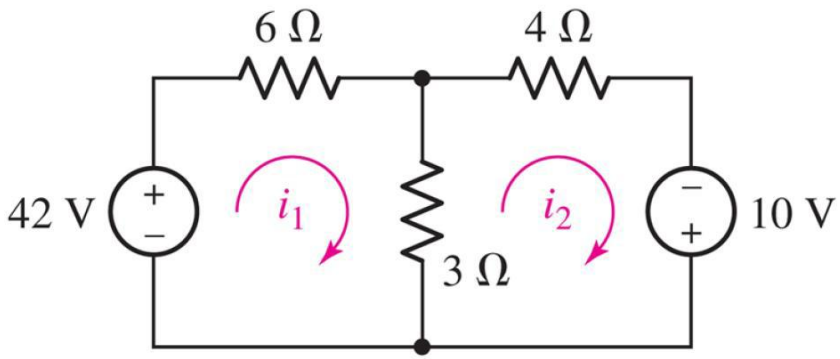

- Determine the loop currents i_1 and i_2

$$-42 + 6i_1 + 3(i_1 - i_2) = 0$$

$$3(i_2 - i_1) + 4i_2 - 10 = 0$$

$$9i_1 - 3i_2 = 42$$

$$-3i_1 + 7i_2 = 10$$

$$\begin{bmatrix} 9 & -3 \\ -3 & 7 \end{bmatrix} \begin{bmatrix} i_1 \\ i_2 \end{bmatrix} = \begin{bmatrix} 42 \\ 10 \end{bmatrix}$$

$$\begin{bmatrix} i_1 \\ i_2 \end{bmatrix} = \begin{bmatrix} 6 \\ 4 \end{bmatrix}$$

The current through the 6-Ω resistor is 6 A.

The current through the 3-Ω resistor is $(i_1 - i_2) = 2$ A

Example 06

- Determine the power supplied by the 2 V source

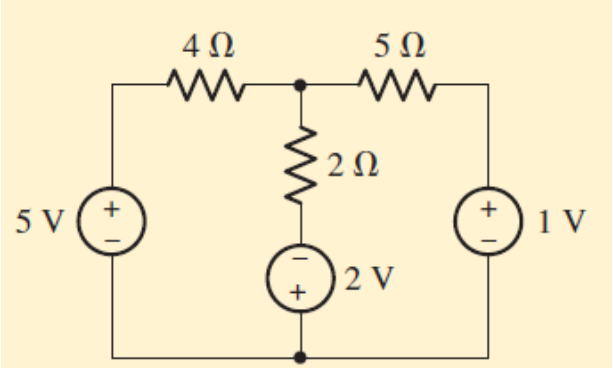

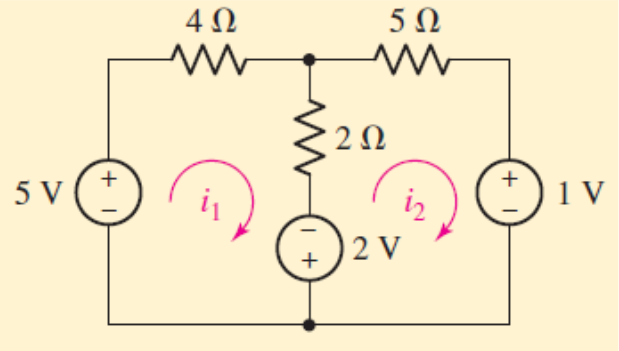

- Mesh 1 $-5 + 4i_1 + 2(i_1 - i_2) - 2 = 0$
- Mesh 2 $+2 + 2(i_2 - i_1) + 5i_2 + 1 = 0$

$$6i_1 - 2i_2 = 7$$

$$-2i_1 + 7i_2 = -3$$

$$i_1 = \frac{43}{38} = 1.132 \text{ A}$$

$$i_2 = -\frac{2}{19} = -0.1053 \text{ A}.$$

- Power absorbed by the 2 V source $-(2)(1.237) = -2.474 \text{ W}.$
  - Actually 2.474 W is supplied

Mesh Analysis with Supermeshes

- Consider the following circuit.

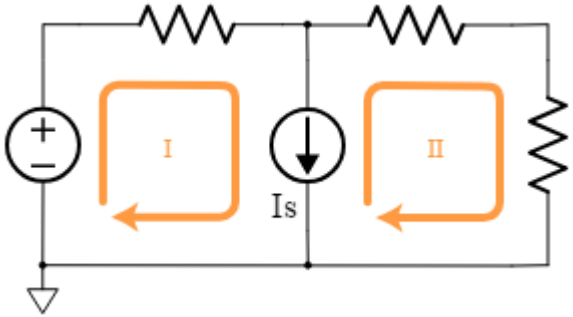

  - Both mesh I and mesh II go through the current source.
    - It is possible to write and solve mesh equations for this configuration.

- Using supermesh

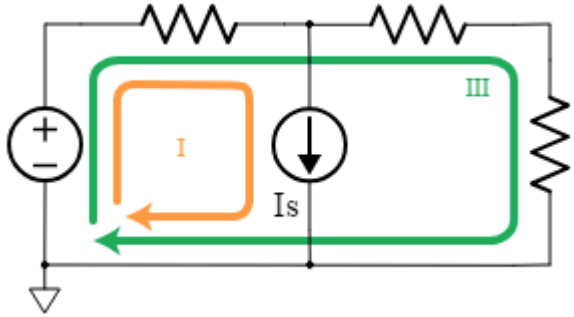

  - You can drop one of the meshes and replace it with the loop that goes around both meshes, as shown here for loop III.
  - You then solve the system of equations exactly the same as the Mesh Analysis

Mesh Analysis with Supermeshes

supermesh = a mesh that contains multiple meshes with a <u>shared current source</u>

For **nodal** analysis, we joined nodes near a **voltage** source. → super<u>node</u>
For **mesh** analysis, we join meshes near a **current** source. → super<u>mesh</u>

→ Reduces the number of simultaneous equations by the number of current sources.

<u>Analysis Steps</u>

(1) Draw a mesh current for each mesh.

(2) Identify supermeshes.

(3) Write KVL around each supermesh, then KVL for each mesh that is not part of a supermesh.

(4) Express additional unknowns (dependent V/I) in terms of mesh currents.

(5) Solve the simultaneous equations.

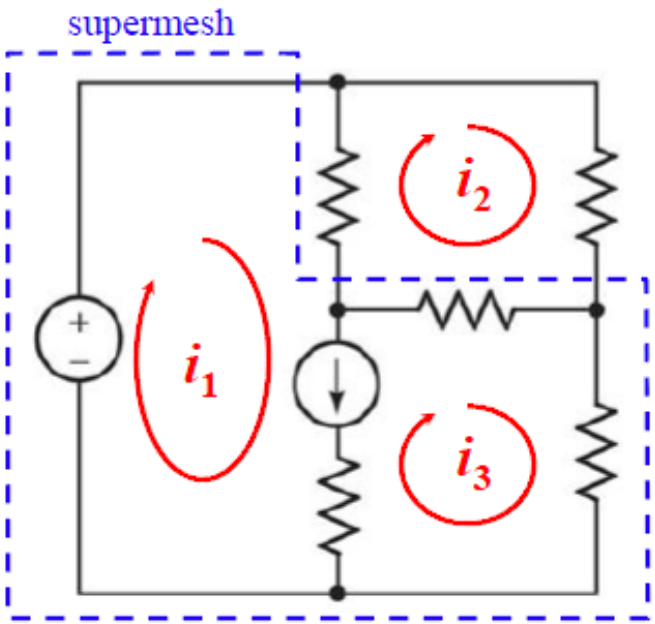

Example 07

- Determine the current i as labeled in the circuit.

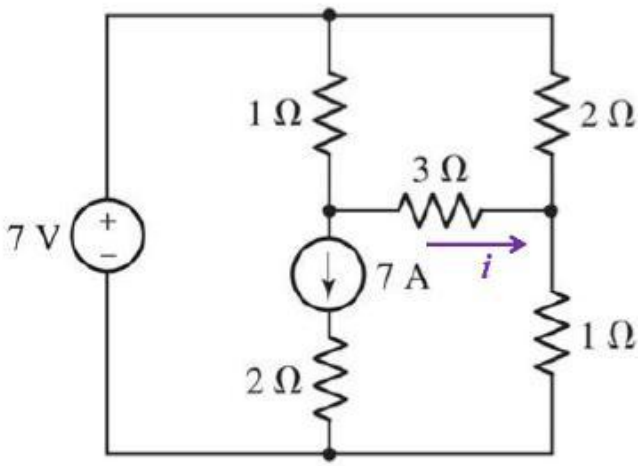

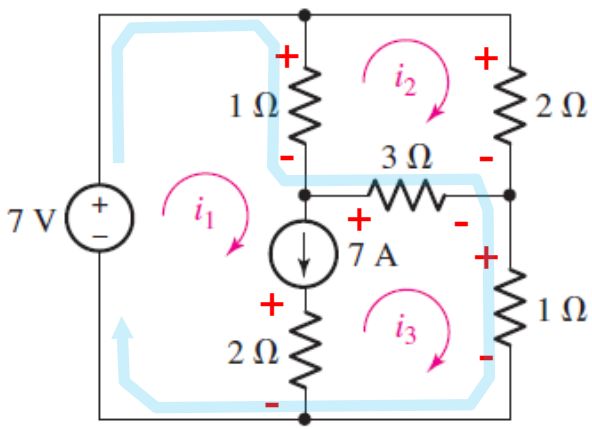

- Supermesh $-7 + 1(i_1 - i_2) + 3(i_3 - i_2) + 1i_3 = 0$
- Mesh 2 $1(i_2 - i_1) + 2i_2 + 3(i_2 - i_3) = 0$

  $-i_1 + 6i_2 - 3i_3 = 0$

- Independent source current is related to the mesh currents

  $i_1 - i_3 = 7$

$i_1 = 9$ A, $i_2 = 2.5$ A. $i_3 = 2$ A

Nodal vs. Mesh Analysis: A Comparison

- The following is a planar circuit with 5 nodes and 4 meshes.
  - Planar circuits are circuits that can be drawn on a plane surface with no wires crossing each other.
- Determine the current i_x

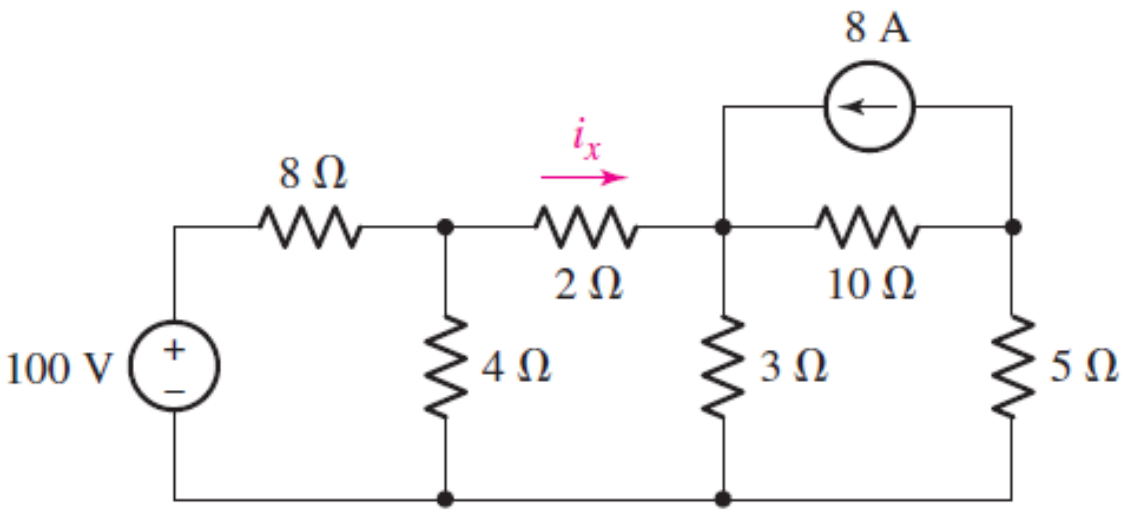

Nodal vs. Mesh Analysis: A Comparison

- Using Nodal Analysis

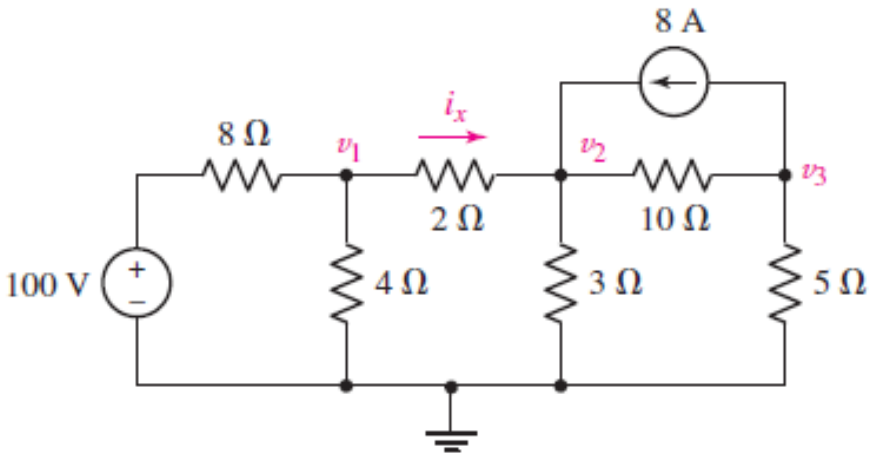

- Although we can write four distinct equations, there is no need to label the node between the 100 V source and the 8 ohm resistor, since that node voltage is clearly 100 V.

- We write the following three equations:

$$\frac{v_1 - 100}{8} + \frac{v_1}{4} + \frac{v_1 - v_2}{2} = 0 \quad \text{or} \quad 0.875v_1 - 0.5v_2 = 12.5$$

$$\frac{v_2 - v_1}{2} + \frac{v_2}{3} + \frac{v_2 - v_3}{10} - 8 = 0 \quad \text{or} \quad -0.5v_1 - 0.9333v_2 - 0.1v_3 = 8$$

$$\frac{v_3 - v_2}{10} + \frac{v_3}{5} + 8 = 0 \quad \text{or} \quad -0.1v_2 + 0.3v_3 = -8$$

- Solving, we find that $v_1 = 25.89$ V $v_2 = 20.31$ V. $i_x = \dfrac{v_1 - v_2}{2} = 2.79$ A

Nodal vs. Mesh Analysis: A Comparison

- Using Mesh Analysis

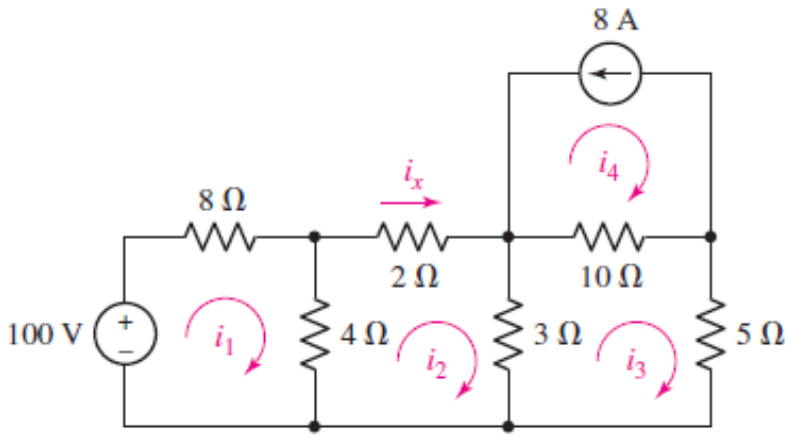

  - We see that we have four distinct meshes
  - However it is obvious that $i_4 = -8$ A
  - We therefore need to write three distinct equations.

- Writing a KVL equation for meshes 1, 2, and 3:

$$-100 + 8i_1 + 4(i_1 - i_2) = 0 \quad \text{or} \quad 12i_1 - 4i_2 = 100$$
$$4(i_2 - i_1) + 2i_2 + 3(i_2 - i_3) = 0 \quad \text{or} \quad -4i_1 + 9i_2 - 3i_3 = 0$$
$$3(i_3 - i_2) + 10(i_3 + 8) + 5i_3 = 0 \quad \text{or} \quad -3i_2 + 18i_3 = -80$$

- Solving, we find that $i_2\ (= i_x) = 2.79$ A