BLM1033 - Circuit Theory and Electronics

The Instructors:

Doç. Dr. Hamza Osman İlhan
hoilhan@yildiz.edu.tr
Prof. Dr. Gökhan Bilgin
gbilgin@yildiz.edu.tr

Lab Assistants:

(Elektronik)	Arş. Gör. Burak Ahmet Özden
(Elektronik)	Arş. Gör. İdris Demir
(Devre)	Arş. Gör. Elif Aşıcı
(Devre)	Arş. Gör. Ömer Mutlu Türk Kaya
(Proje)	Arş. Gör. Barış Akkuş

Linearity
Superposition
Source Transformation
Thevenin and Norton Theorem

Objectives of Lecture

- Introduce the property of linearity
- Introduce the superposition principle
- Provide step-by-step instructions to apply superposition when calculating voltages and currents in a circuit that contains two or more power sources.
- Describe the differences between ideal and real voltage and current sources
  - Demonstrate how a real voltage source and real current source are equivalent so one source can be replaced by the other in a circuit.
- State Thévenin's and Norton Theorems.
  - Demonstrate how Thévenin's and Norton theorems can be used to simplify a circuit to one that contains three components: a power source, equivalent resistor, and load.
- Understand Maximum Power Transfer Theorem

Linearity

A Requirement for Superposition

Linear Systems

- The homogeneity property requires that if the input (also called the excitation) is multiplied by a constant, then the output (also called the response) is multiplied by the same constant.

- If x is doubled,

  $y = f(2Xx) = 2f(x)$

- If x is multiplied by any constant, a

  $y = f(ax) = af(x)$

- then the system is linear.

Linearity

- Ohm's Law is a linear function.

  $V = I \times R$

- If the current is increased by a constant k, then the voltage increases correspondingly by k;

  $k \times I \times R = k \times V$

- Example: DC Sweep of V1

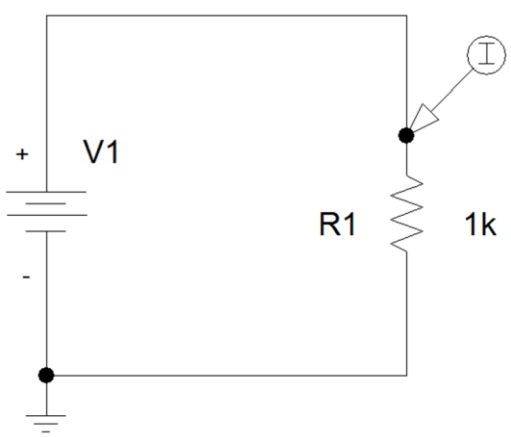

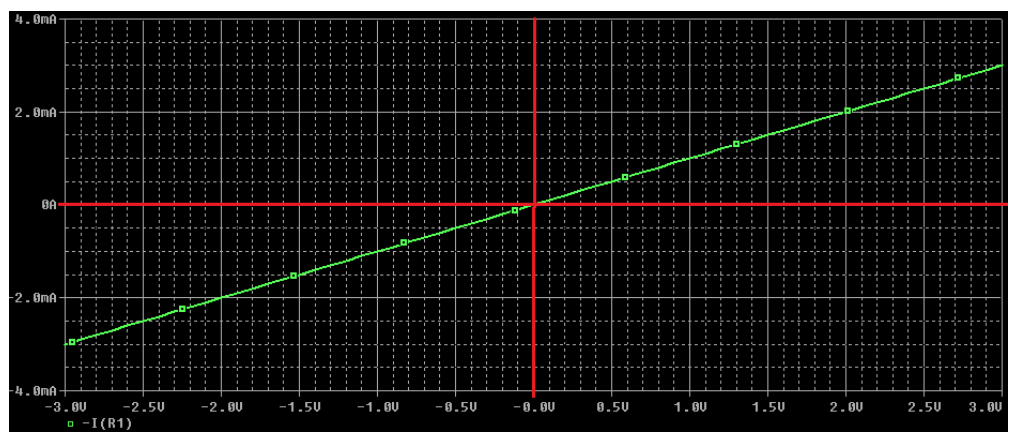

Linearity

- The additivity property requires that the response to a sum of inputs is the sum of the responses to each input applied separately.
- If $x = x_1 + x_2$

  $$y = f(x) = f(x_1 + x_2) = f(x_1) + f(x_2)$$
- then the system is linear.

- Using the voltage-current relationship of a resistor, if

  $$V_1 = I_1 \times R \quad \text{and} \quad V_2 = I_2 \times R$$
- then applying $(I_1 + I_2)$ gives

  $$V = (I_1 + I_2) \times R = I_1 \times R + I_2 \times R = V_1 + V_2$$

Mesh Analysis is Based Upon Linearity

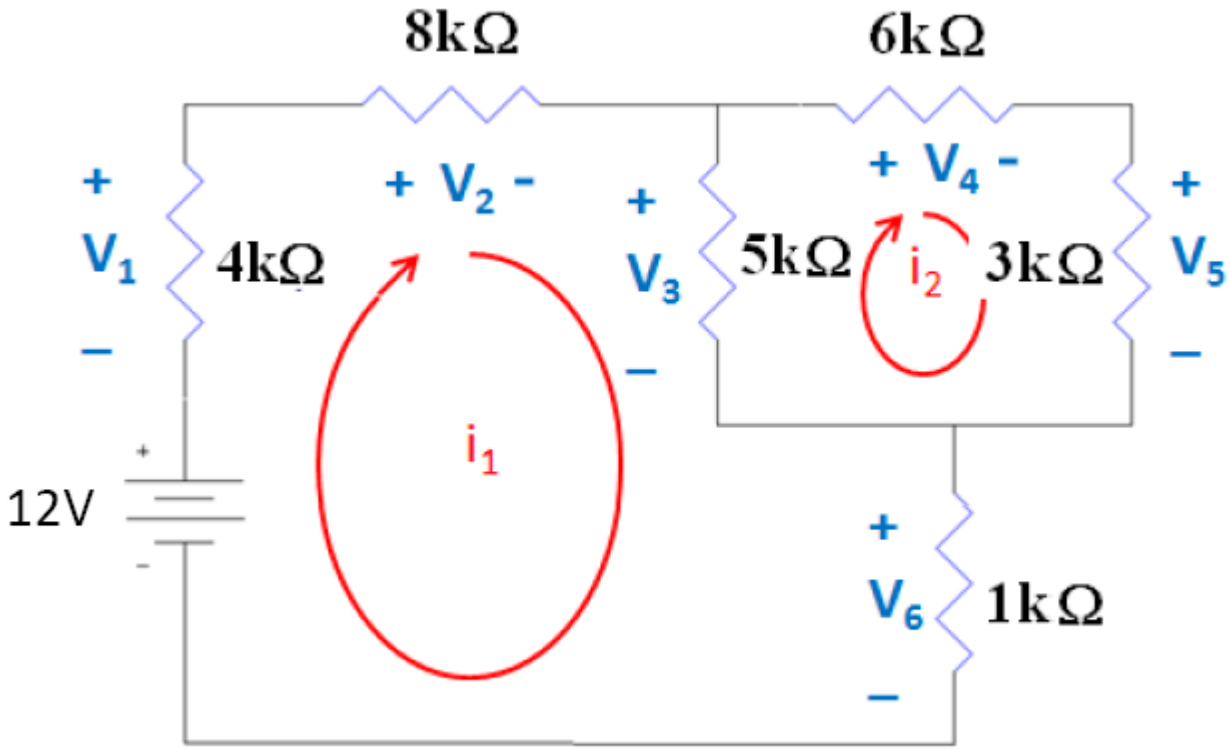

$$V_3 = 5k\Omega\,(i_1 - i_2) = 5k\Omega\, i_i - 5k\Omega\, i_2$$

Nonlinear Systems and Parameters

- In a linear resistive circuit power is

  $P = IV$

- Is power linear with respect to current and voltage?

- Power is nonlinear with respect to current and voltage.
  - As either voltage or current increase by a factor of a, P increases by a factor of a^2.

    $P = IV = I^2R = V^2/R$

Linear Components

- Resistors
- Inductors
- Capacitors
- Independent voltage and current sources
- Certain dependent voltage and current sources that are linearly controlled

Nonlinear Components

- Diodes including Light Emitting Diodes
- Transistors
- SCRs
- Magnetic switches
- Nonlinearily controlled dependent voltage and current sources

Diode Characteristics

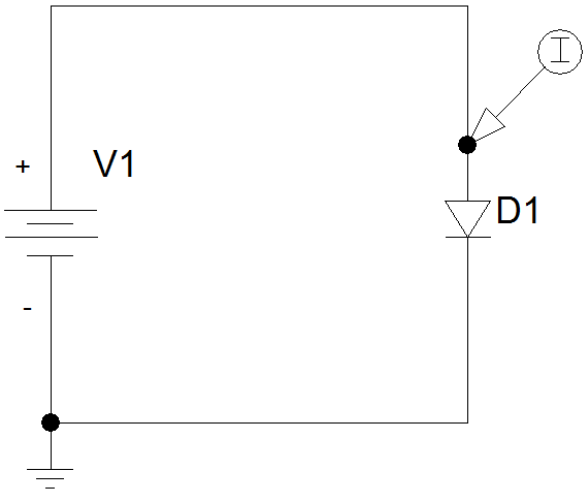

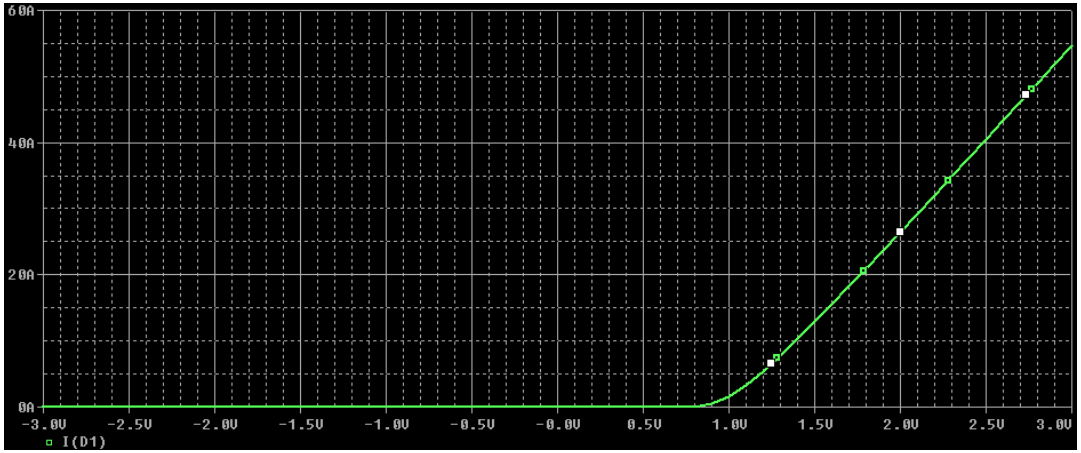

- An equation for a line can not be used to represent the current as a function of voltage.

Example 01…

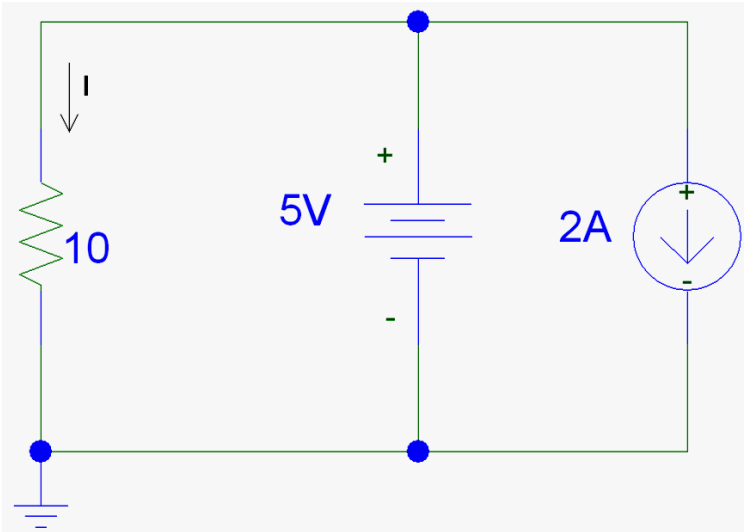

- Find I
  - This circuit can be separated into two different circuits
    - one containing the 5V source
    - the other containing the 2A source.

- When you remove a voltage source from the circuit, it should be replaced by a short circuit.

- When you remove a current source from the circuit, it should be replaced by an open circuit.

…Example 01…

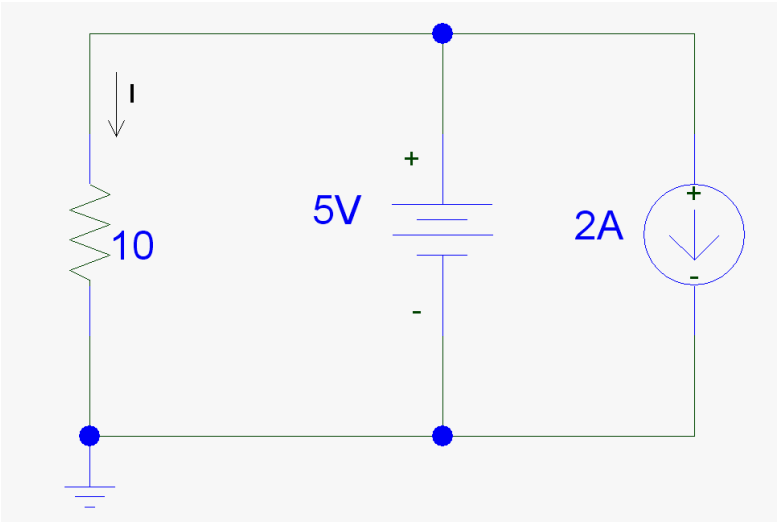

=

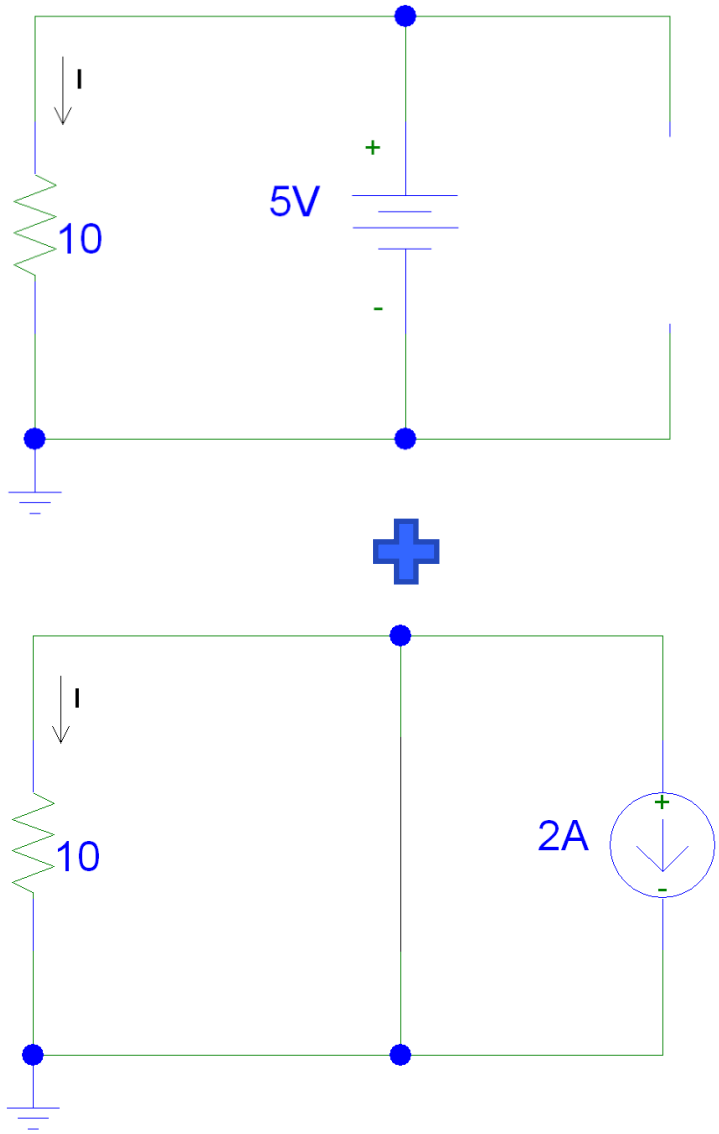

…Example 01…

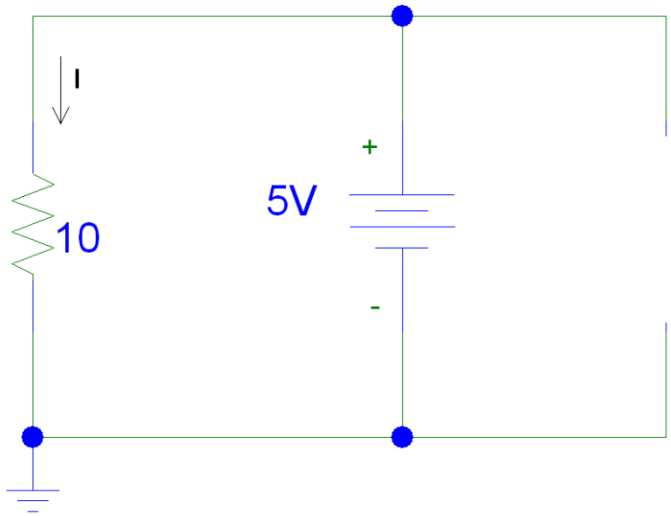

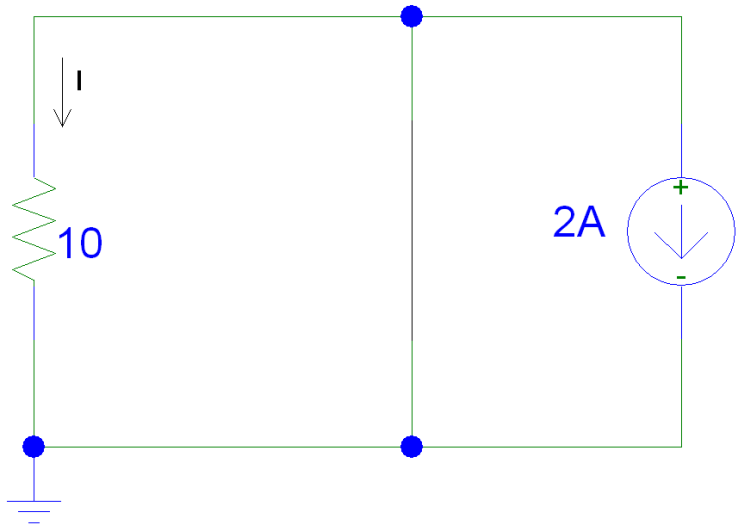

$I_1 = 5V/10\Omega = 0.5A$

$I_2 = 0A$

$I = I_1 + I_2 = 0.5 + 0 = 0.5A$

…Example 01

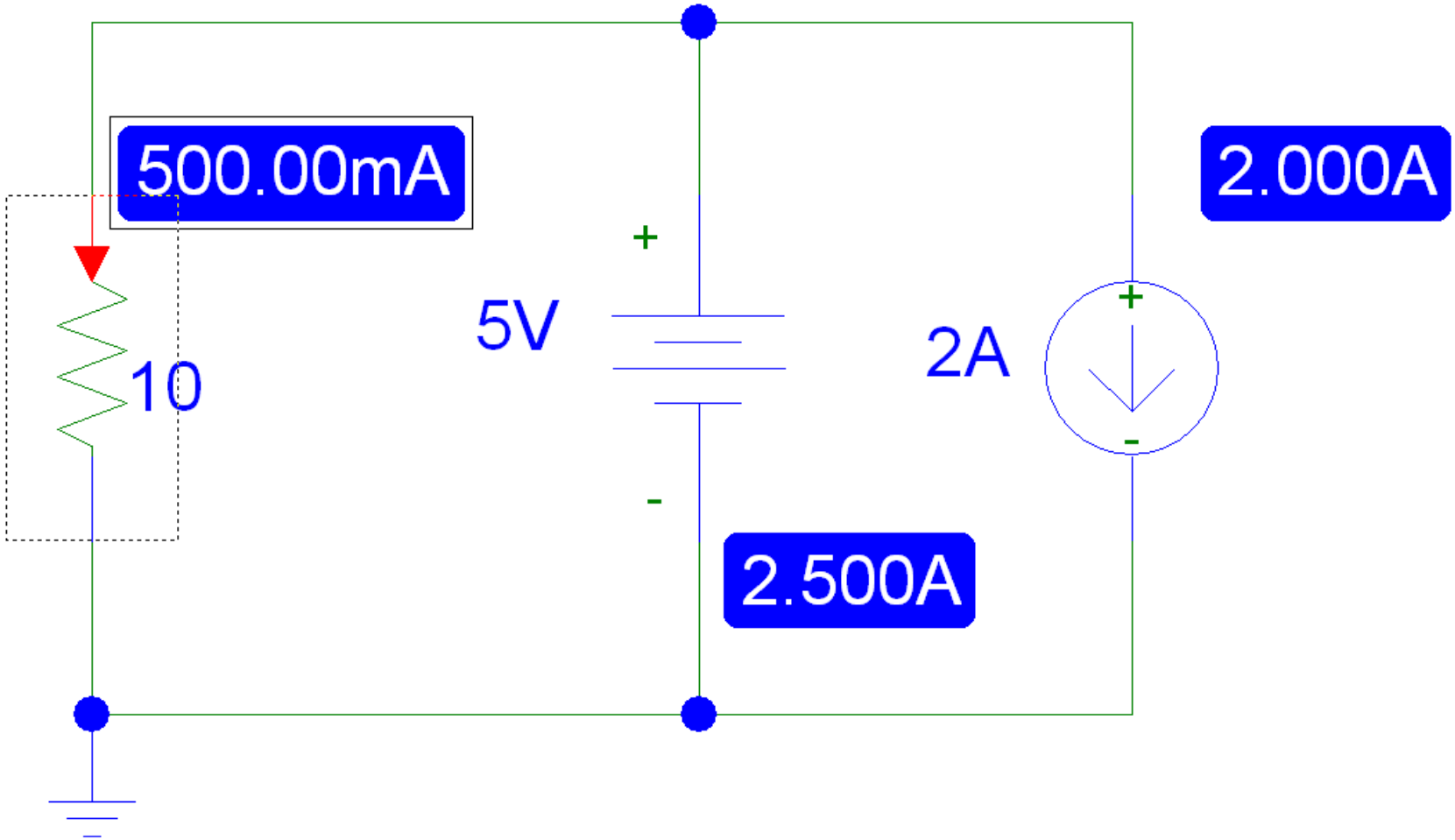

Summary

- The property of linearity can be applied when there are only linear components in the circuit.
  - Resistors, capacitors, inductors
  - Linear voltage and current supplies
- The property is used to separate contributions of several sources in a circuit to the voltages across and the currents through components in the circuit.
  - Superposition

Example 2

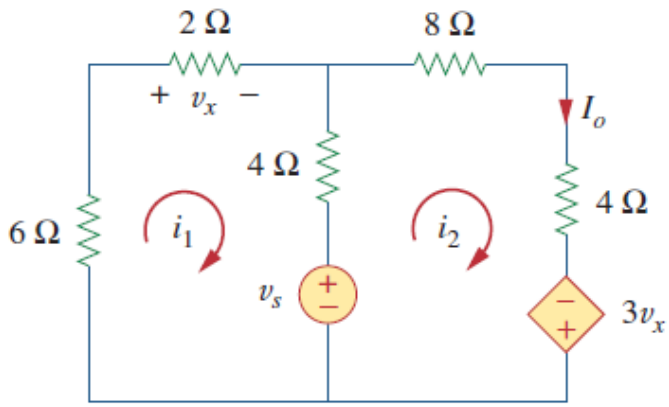

- For the circuit, find I_0 when $v_s = 12$ V and $v_s = 24$ V.
- Apply KVL to the loops,

$$12i_1 - 4i_2 + v_s = 0$$

$$-4i_1 + 16i_2 - 3v_x - v_s = 0$$

$$v_x = 2i_1$$

$$-10i_1 + 16i_2 - v_s = 0$$

$$+$$

$$2i_1 + 12i_2 = 0 \quad \Rightarrow \quad i_1 = -6i_2$$

$$-76i_2 + v_s = 0 \quad \Rightarrow \quad i_2 = \frac{v_s}{76}$$

When $v_s = 12$ V, $I_o = i_2 = \frac{12}{76}$ A When $v_s = 24$ V, $I_o = i_2 = \frac{24}{76}$ A

Example 3

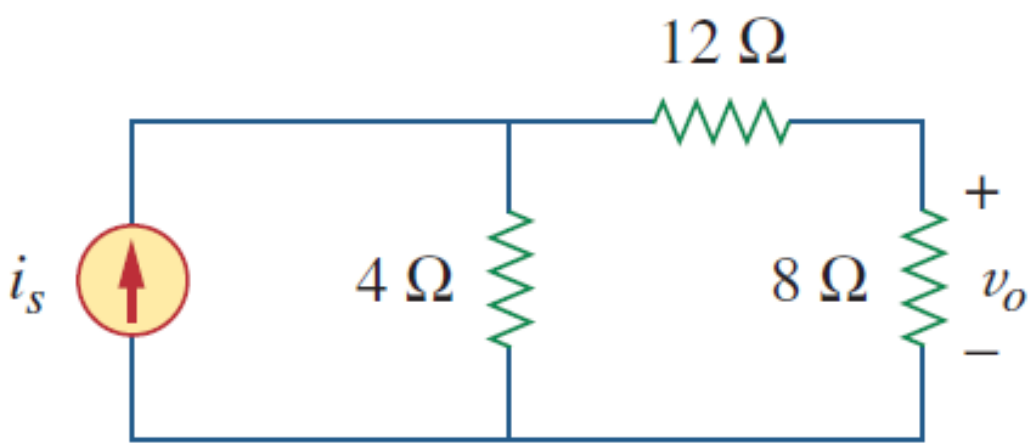

- For the circuit, find v_0 when $i_s = 30$ A and $i_s = 45$ A.

Answer: 40 V, 60 V.

Example 4

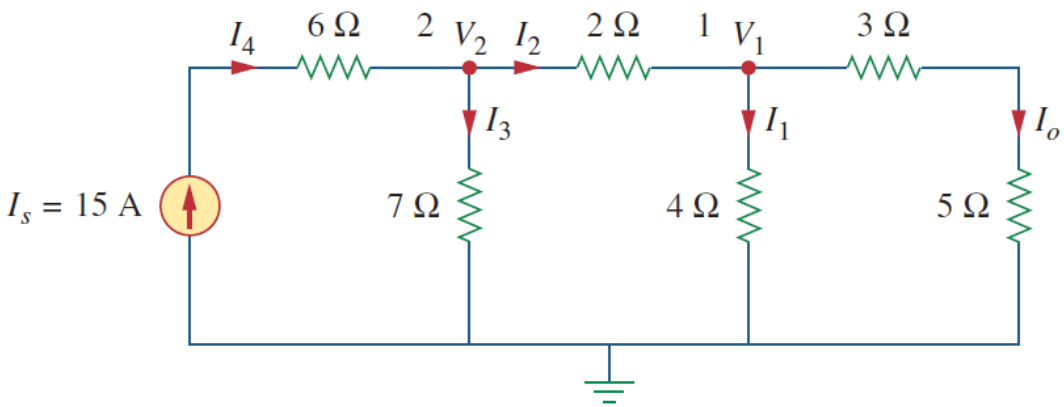

- Assume $I_0 = 1$ A and use linearity to find the actual value of I_0 in the circuit.

If $I_o = 1$ A, then $V_1 = (3 + 5)I_o = 8$ V and $I_1 = V_1/4 = 2$ A. Applying KCL at node 1 gives

$$I_2 = I_1 + I_o = 3 \text{ A}$$

$$V_2 = V_1 + 2I_2 = 8 + 6 = 14 \text{ V}, \qquad I_3 = \frac{V_2}{7} = 2 \text{ A}$$

Applying KCL at node 2 gives

$$I_4 = I_3 + I_2 = 5 \text{ A}$$

Therefore, $I_s = 5$ A. This shows that assuming $I_o = 1$ gives $I_s = 5$ A, the actual source current of 15 A will give $I_o = 3$ A as the actual value.

Example 5

- For the circuit, assume that $V_0 = 1\text{V}$ and use linearity to calculate the actual value of V_0 .

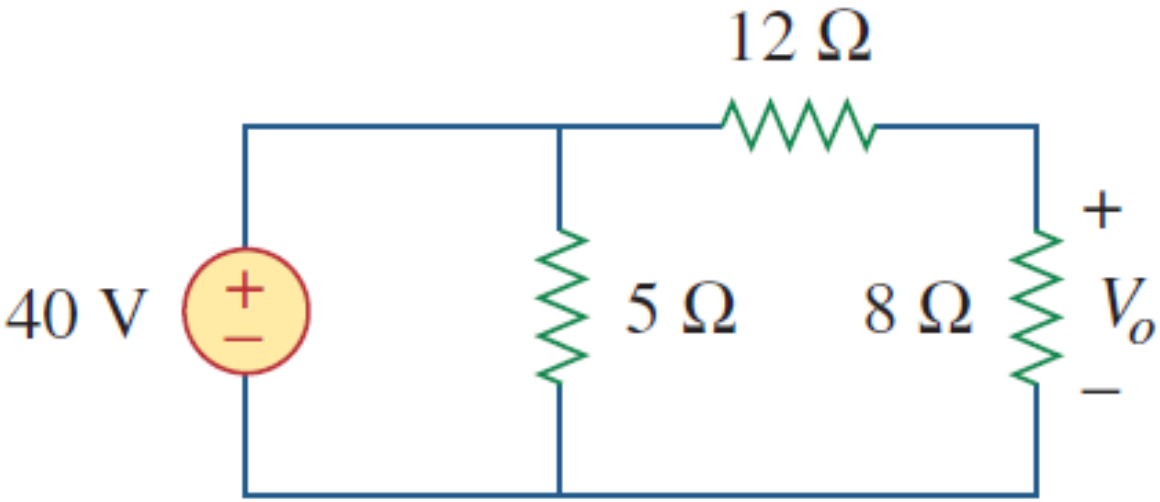

Answer: 16 V.

Superposition

Superposition

- The voltage across a component is the algebraic sum of the voltages across the component due to each independent source acting upon it.
- The current flowing through across a component is the algebraic sum of the current flowing through component due to each independent source acting upon it.

Usage

- Separating the contributions of the DC and AC independent sources.

  Example:

  To determine the performance of an amplifier, we calculate the DC voltages and currents to establish the bias point.

  The AC signal is usually what will be amplified.

  A generic amplifier has a constant DC operating point, but the AC signal's amplitude and frequency will vary depending on the application.

Steps

1. Turn off all independent sources except one.
   Voltage sources should be replaced with short circuits
   Current sources should be replaced with open circuits
2. Keep all dependent sources **on**
3. Solve for the voltages and currents in the new circuit.
4. Turn off the active independent source and turn on one of the other independent sources.
5. Repeat Step 3.
6. Continue until you have turned on each of the independent sources in the original circuit.
7. To find the total voltage across each component and the total current flowing, add the contributions from each of the voltages and currents found in Step 3.

A Requirement for Superposition

- Once you select a direction for current to flow through a component and the direction of the + /– signs for the voltage across a component, you <u>must</u> use the same directions when calculating these values in all of the subsequent circuits.

Example 6…

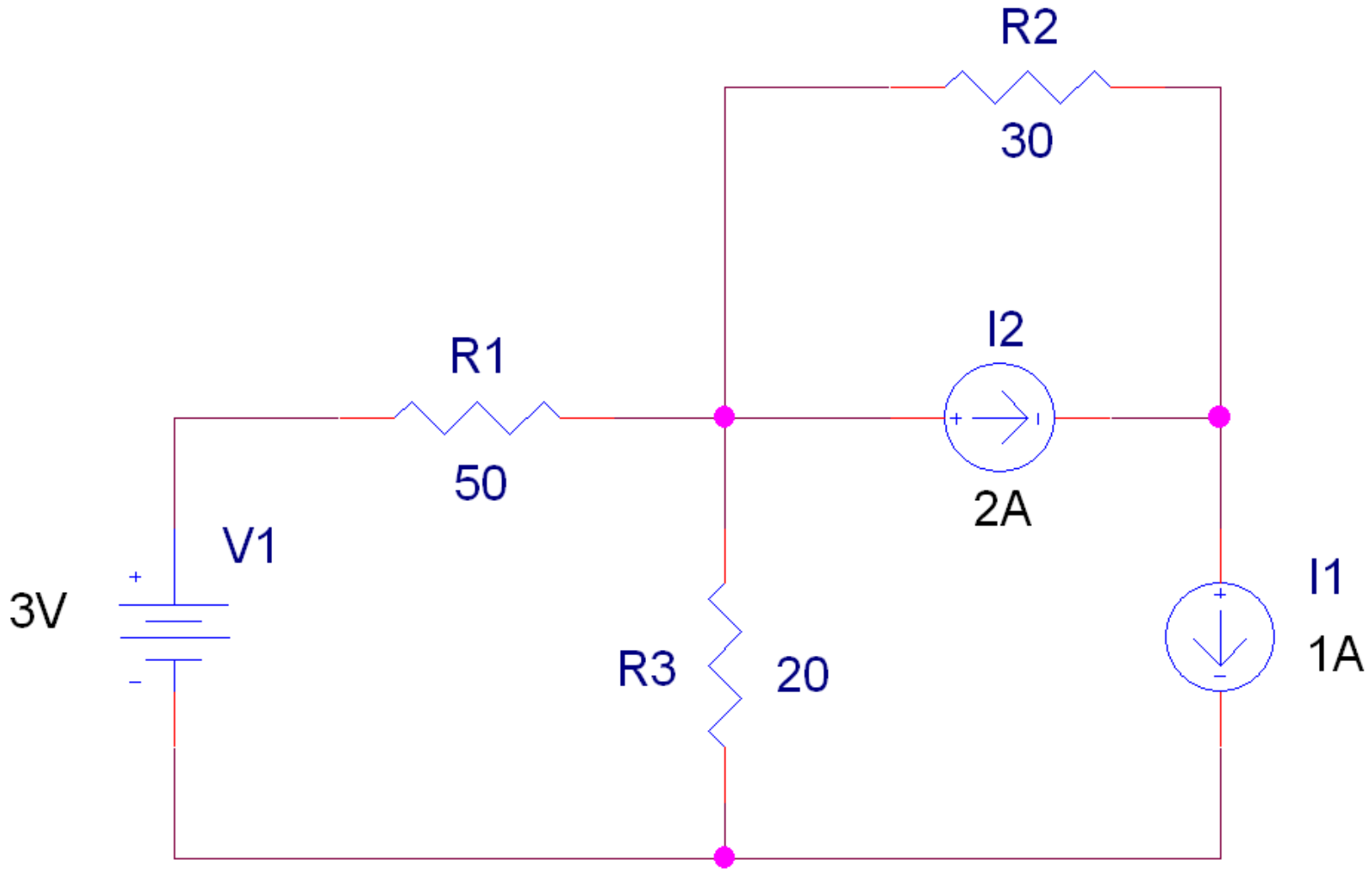

…Example 6…

#1: Replace I1 and I2 with Open Circuits

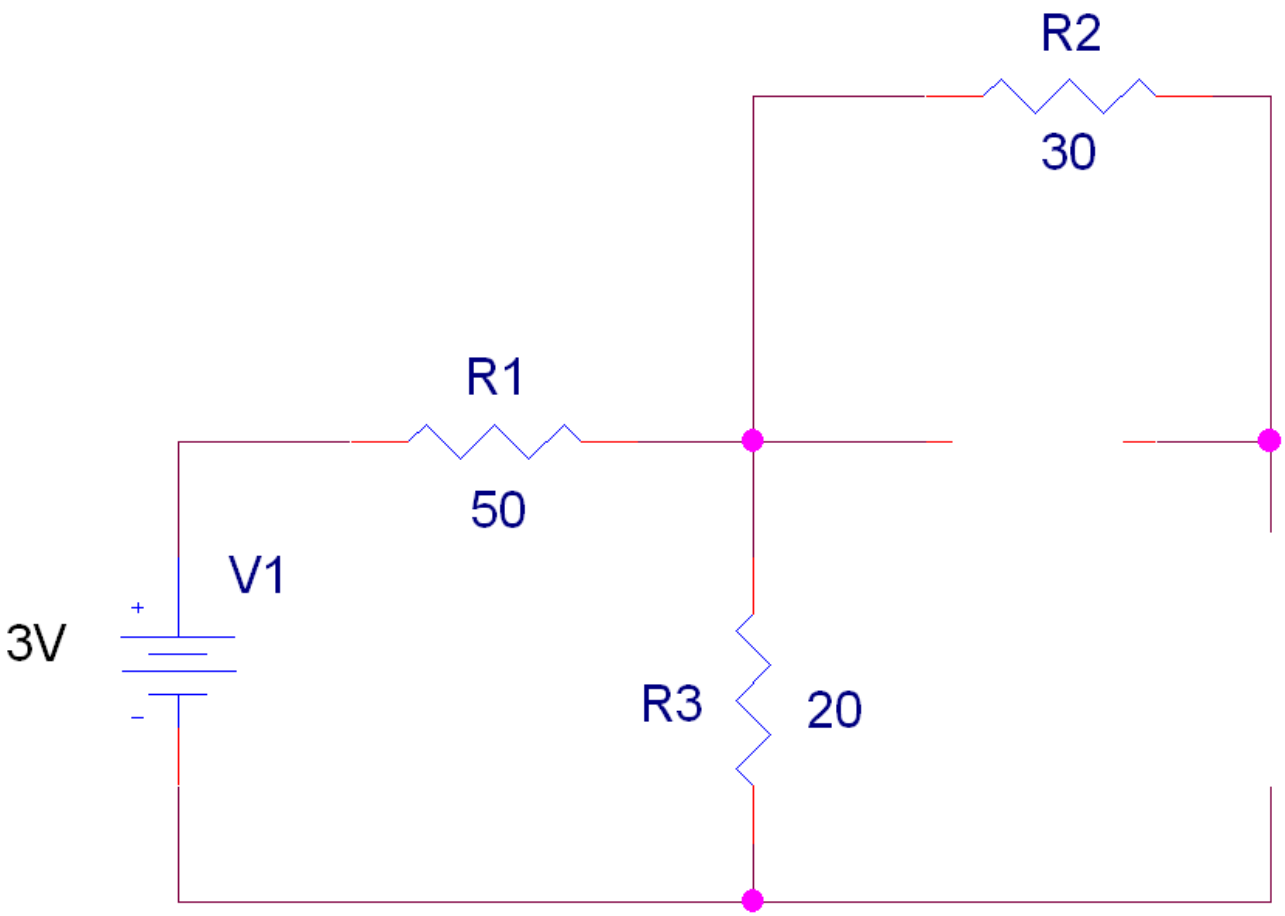

…Example 6…

Since R2 is not connected to the rest of the circuit on both ends of the resistor, it can be deleted from the new circuit.

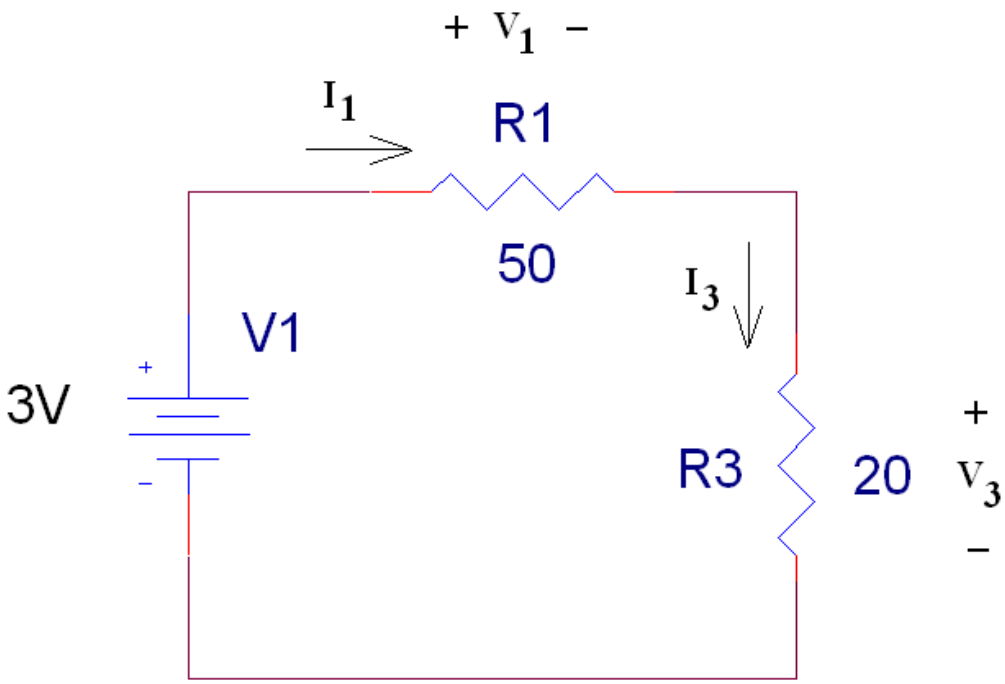

$I_1 = I_3$

$R_{eq} = R_1 + R_3 = 70W$

$I_1 = 3V/R_{eq} = 42.9mA$

$V_1 = [R_1/R_{eq}]3V$ (or I_1R_1)

$= [50W/70W]3V = 2.14V$

$V_3 = [R_3/R_{eq}]3V$ (or I_3R_3)

$= [20W/70W]3V = 0.857V$

…Example 6…

#2: Replace V1 with a Short Circuit and I2 with an Open Circuit

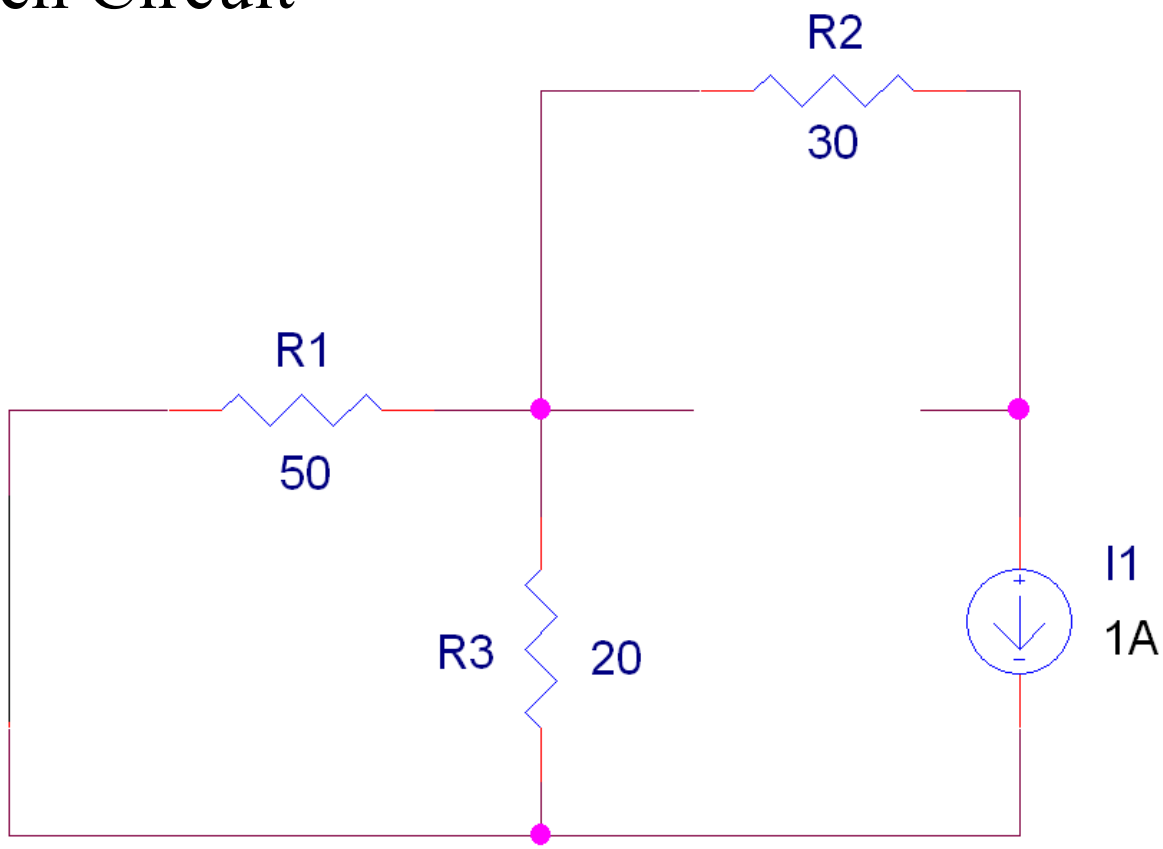

…Example 6…

Redrawing Circuit #2

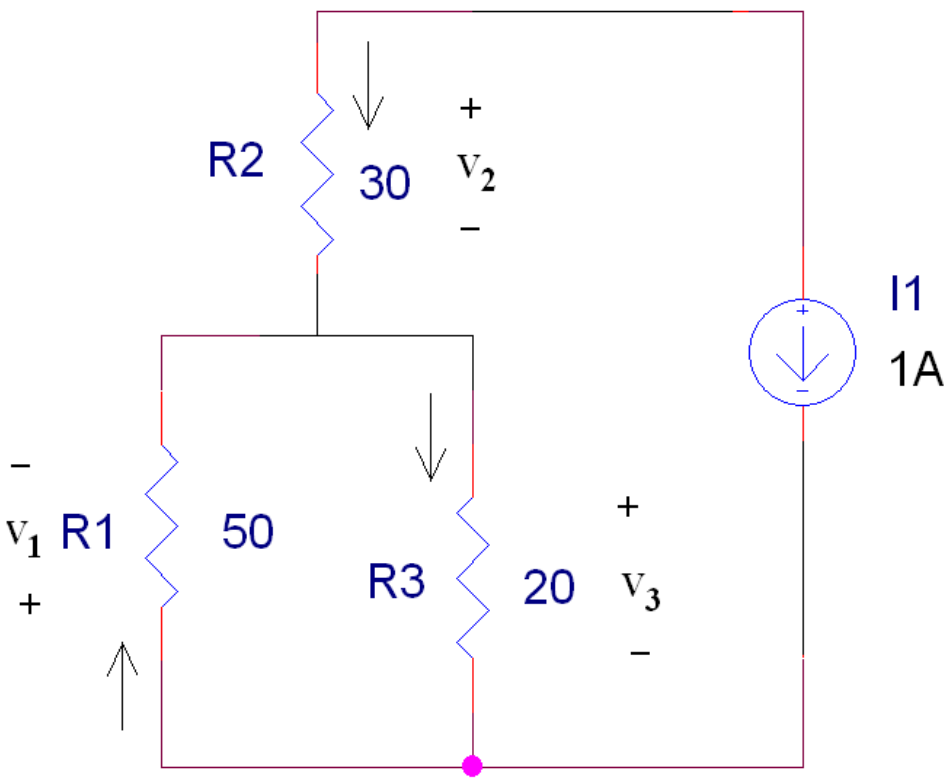

$V_1 = - V_3$
$I_1 + I_2 = I_3$
$I_2 = - 1A$

$R_{eq} = R_2 + R_1 II R_3$
$R_{eq} = 44.3W$

$V_2 + V_3 = R_{eq}\ I_2 = -44.3V$

$V_3 = [R_1 II R_3 / R_{eq}](-44.3V)$
$V_3 = -14.3V$

$I_3 = -14.3V/20W = -0.714A$

$V_1 = 14.3V$
$V_2 = -30V$
$I_1 = + 0.286A$

…Example 6…

#3: Replace V1 with a Short Circuit and I1 with an Open Circuit

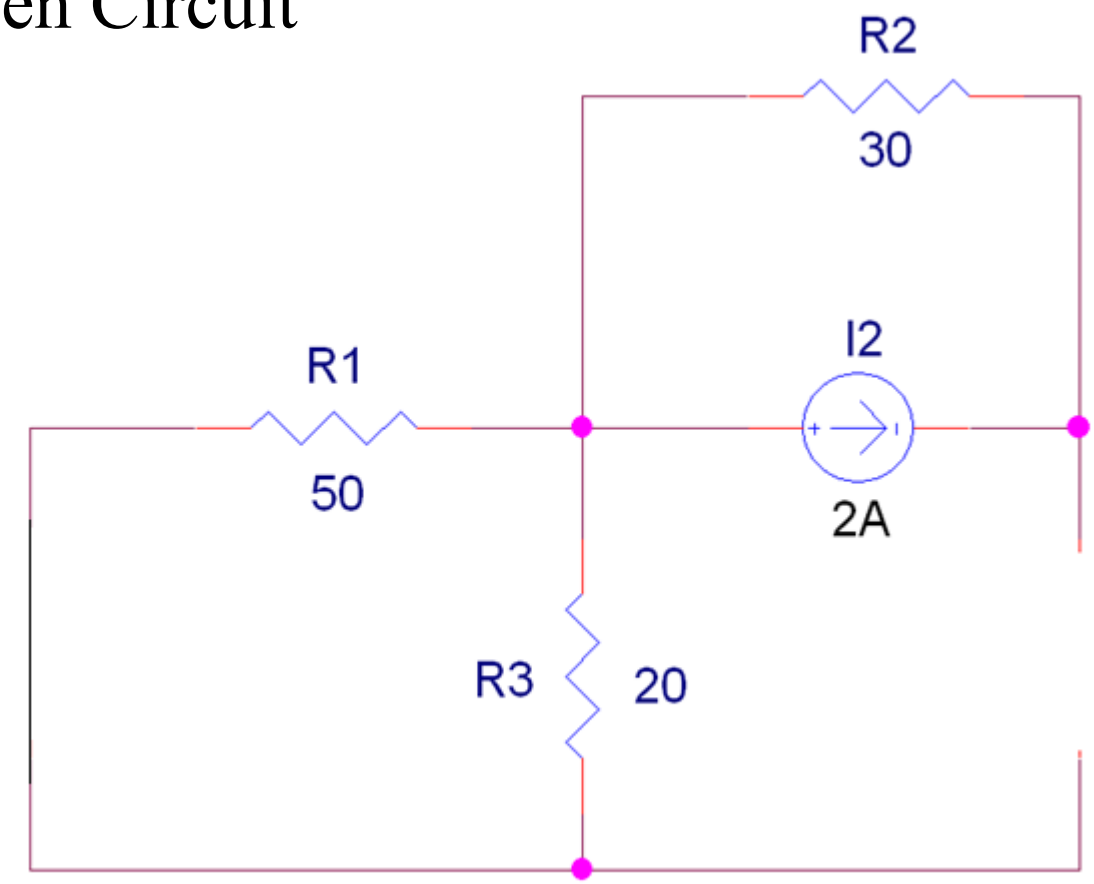

…Example 6…

R2 and I2 are not in parallel with R3

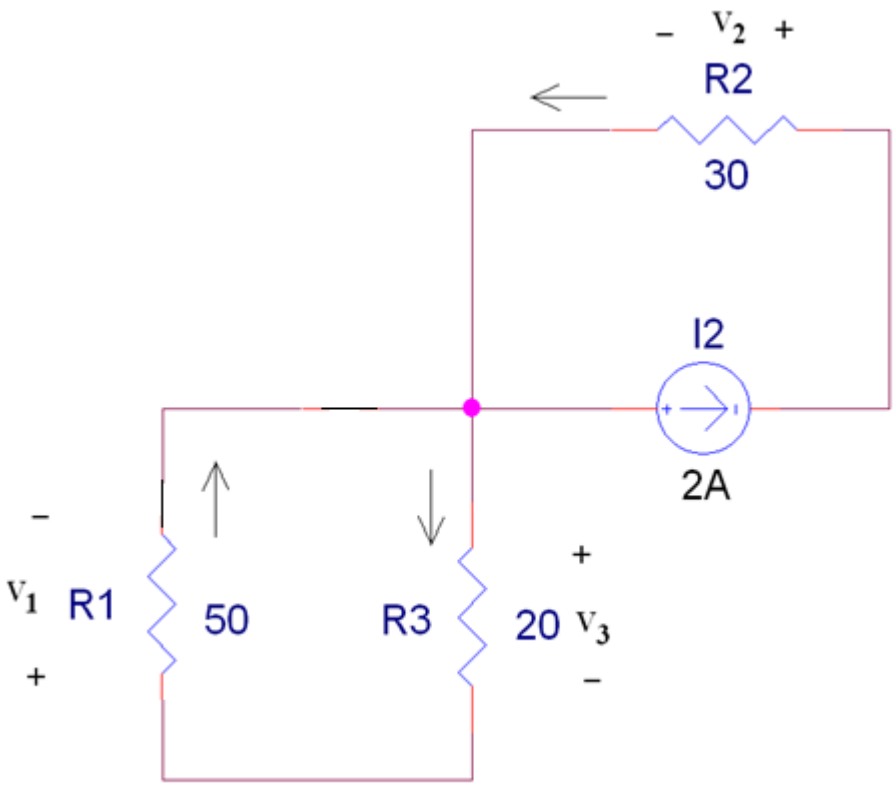

$I_1 + I_2 = I_3 + 2A$
$I_2 = 2A;\ I_1 = I_3$

$V_2 = I_2\ R_2 = 2A(30W) = 60V$

$0 = V_1 + V_3 = R_1I_1 + R_1I_1 = -\ R_3I_3$
$I_1 = I_3 = 0A$

$V_1 = 0V$
$V_3 = 0V$

…Example 6

Currents and Voltages in Original Circuit

	#1	#2	#3	Total
I_1	+42.9mA	+0.286A	0A	+0.329A
I_2	0	-1A	2A	+1A
I_3	+42.9mA	-0.714A	0A	-0.671A
V_1	+2.14V	+14.3V	0V	16.4V
V_2	0V	-30V	+ 60V	+30.0V
V_3	0.857V	-14.3V	0V	-13.4V

Pspice Simulation

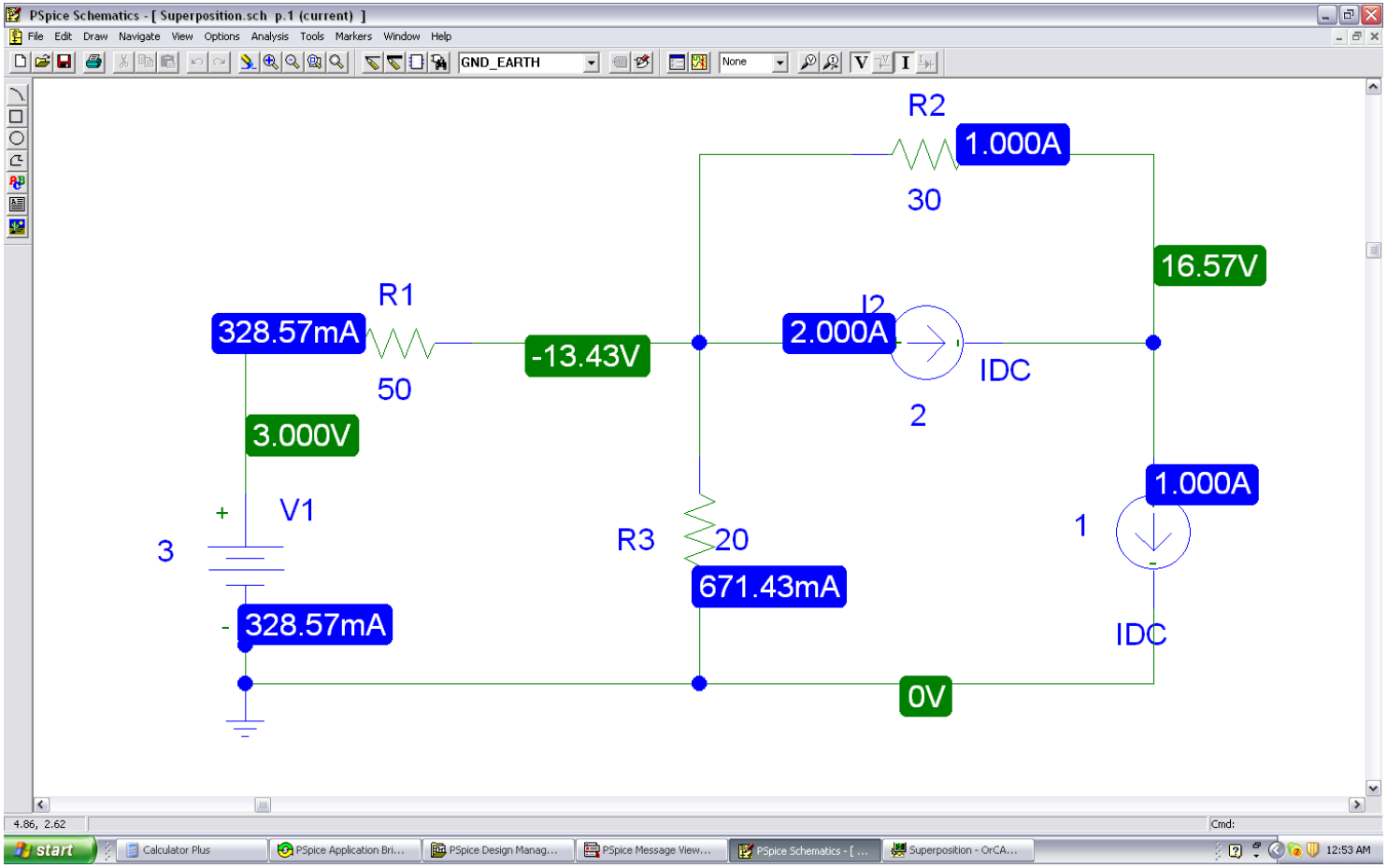

Example 7

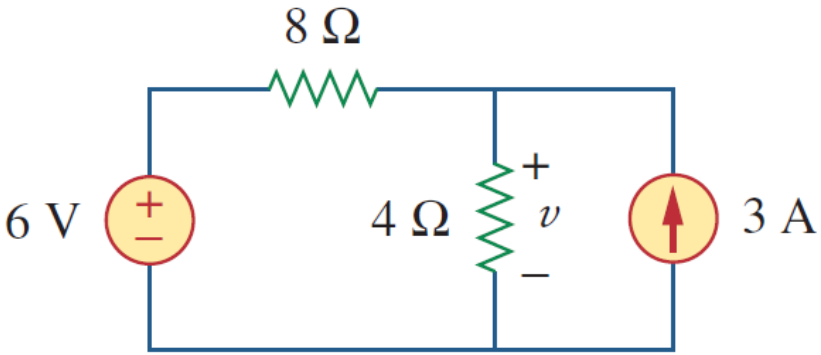

- Use the superposition theorem to find v in the circuit.

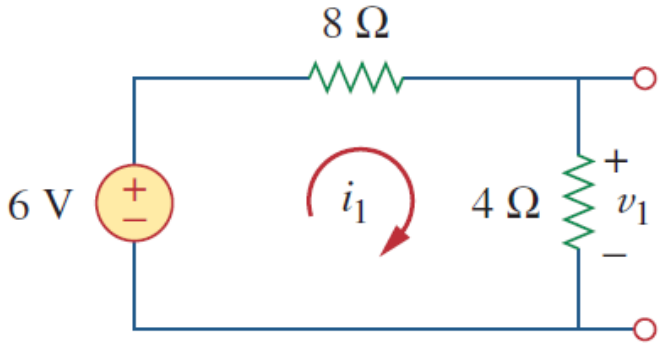

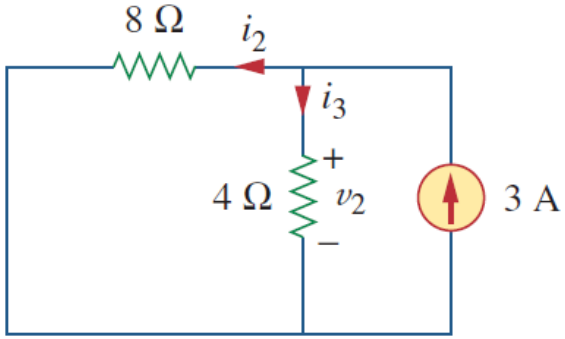

$$v_1 = \frac{4}{4+8}(6) = 2 \text{ V}$$

$$i_3 = \frac{8}{4+8}(3) = 2 \text{ A}$$

$$v_2 = 4i_3 = 8 \text{ V}$$

$$v = v_1 + v_2 = 2 + 8 = 10 \text{ V}$$

Example 8

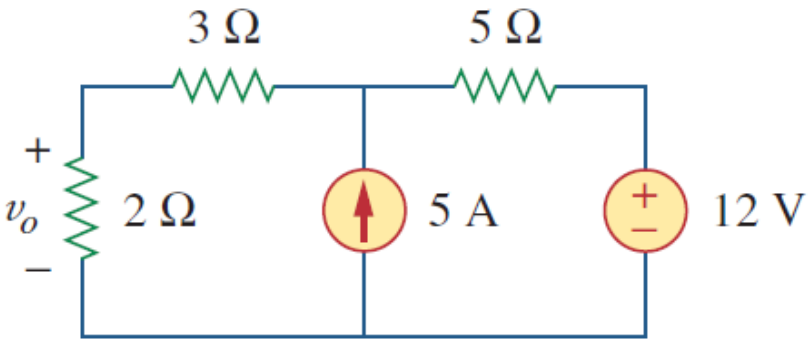

- Using the superposition theorem, find v_0 in the circuit.

Answer: 7.4 V.

Example 9…

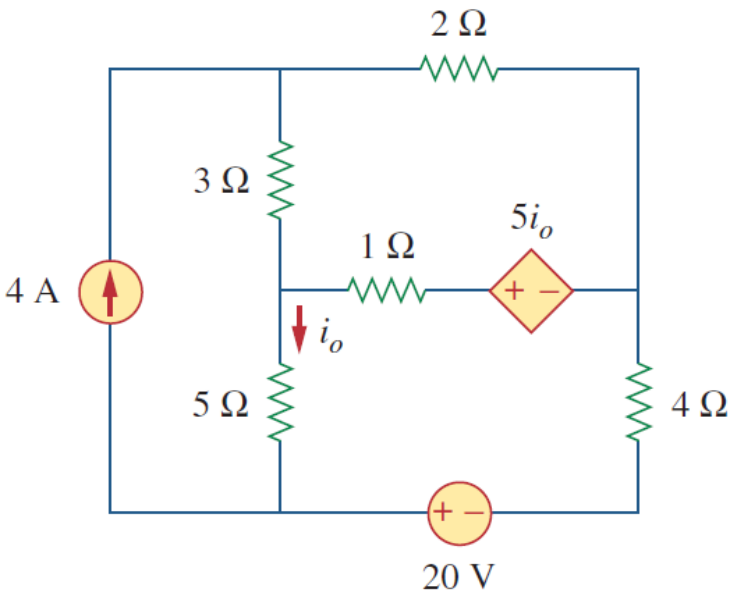

- Using the superposition theorem, find i_0 in the circuit.
  - The circuit involves a dependent source, which must be left intact. We let $i_o = i'_o + i''_o$
  - According to superposition theorem:

Circuit 1

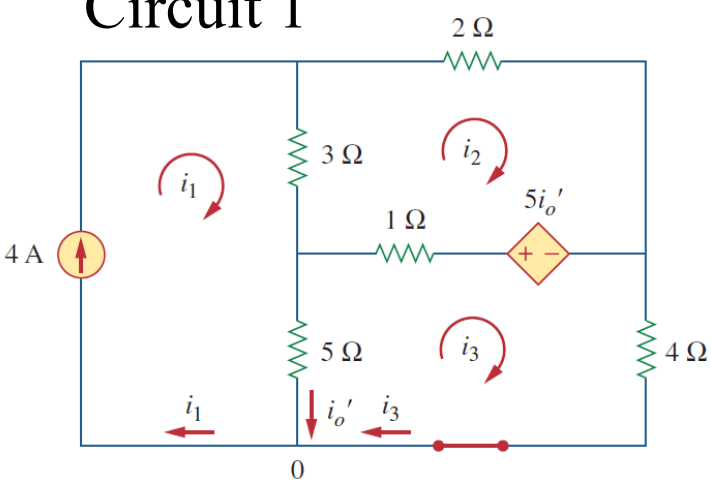

Circuit 2

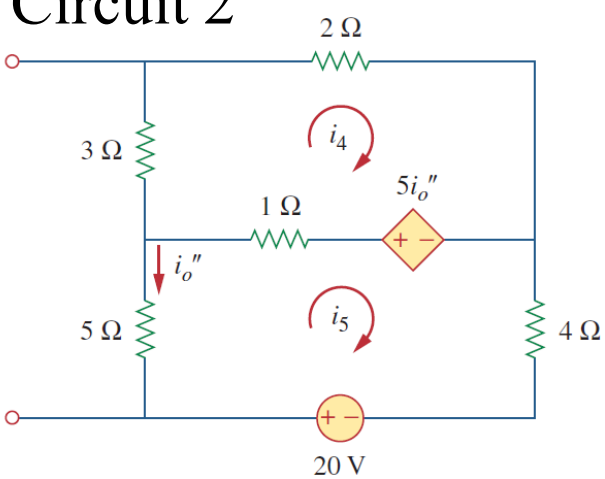

…Example 9

- Circuit 1

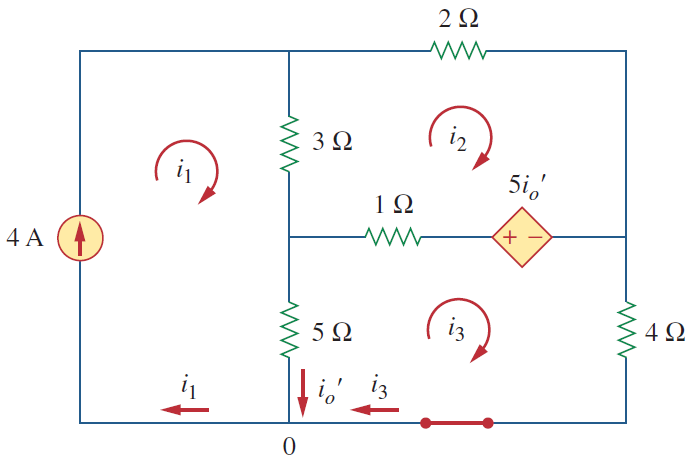

$$i_1 = 4 \text{ A}$$

$$-3i_1 + 6i_2 - 1i_3 - 5i_o' = 0$$

$$-5i_1 - 1i_2 + 10i_3 + 5i_o' = 0$$

$$i_3 = i_1 - i_o' = 4 - i_o'$$

$$3i_2 - 2i_o' = 8$$

$$i_2 + 5i_o' = 20$$

$$i_o' = \frac{52}{17} \text{ A}$$

- Circuit 2

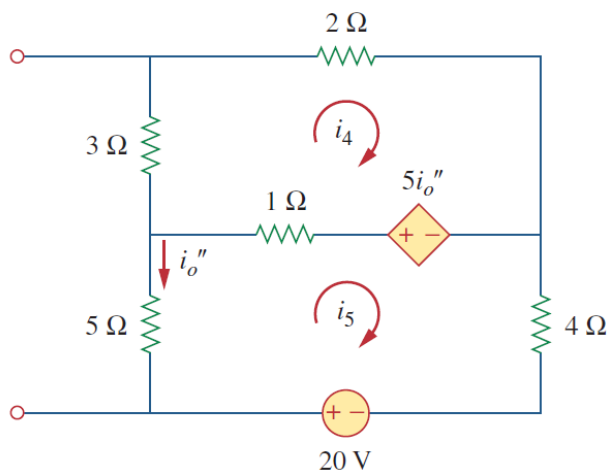

$$6i_4 - i_5 - 5i_o'' = 0 \qquad i_5 = -i_o''$$

$$-i_4 + 10i_5 - 20 + 5i_o'' = 0$$

$$6i_4 - 4i_o'' = 0$$

$$i_4 + 5i_o'' = -20$$

$$i_o'' = -\frac{60}{17} \text{ A}$$

$$i_o = i_o' + i_o'' = -\frac{8}{17} = -0.4706 \text{ A}$$

Source Transformation

Basis for Thevenin and Norton Equivalent Circuits

Source Transformation

- We have noticed that series-parallel combination and wye-delta transformation help simplify circuits.
- Source transformation is another tool for simplifying circuits.
- Basic to these tools is the concept of equivalence.
  - an equivalent circuit is one whose *v*-*i* characteristics are identical with the original circuit.

Source Transformation

- A source transformation is the process of replacing a voltage source v_s in series with a resistor R by a current source i_s in parallel with a resistor R, or vice versa.

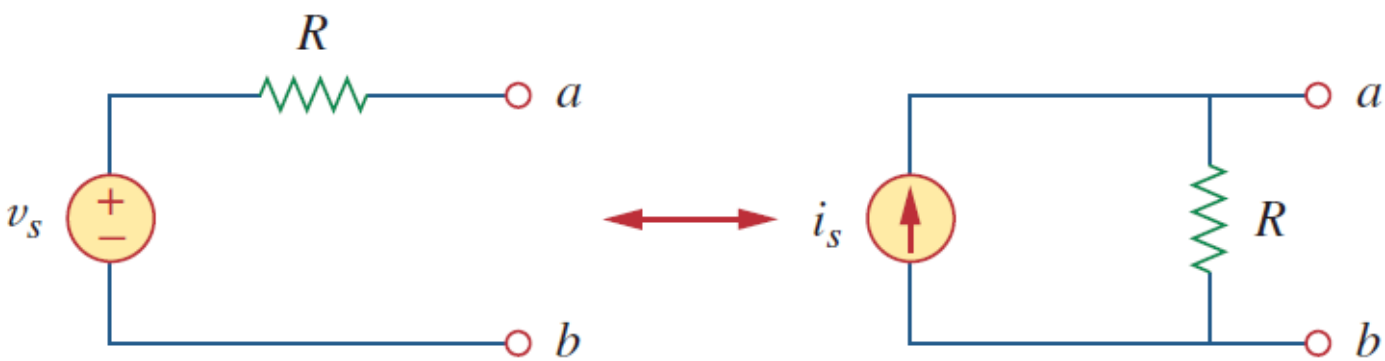

$$v_s = i_s R \qquad \text{or} \qquad i_s = \frac{v_s}{R}$$

Source Transformation

- Source transformation also applies to dependent sources, provided we carefully handle the dependent variable.
  - A dependent voltage source in series with a resistor can be transformed to a dependent current source in parallel with the resistor or vice versa.

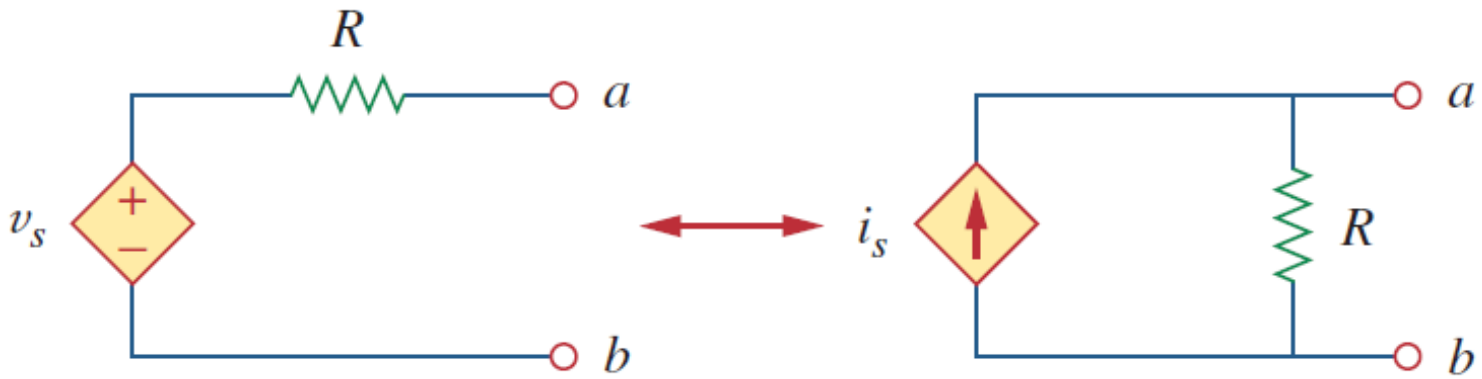

$$v_s = i_s R \qquad \text{or} \qquad i_s = \frac{v_s}{R}$$

Voltage Sources

Ideal

- An ideal voltage source has no internal resistance.
  - It can produce as much current as is needed to provide power to the rest of the circuit.

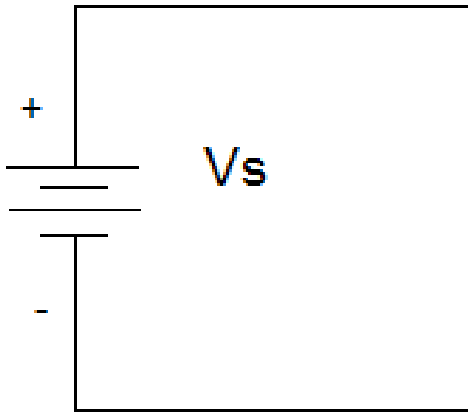

Real

- A real voltage sources is modeled as an ideal voltage source in series with a resistor.
  - There are limits to the current and output voltage from the source.

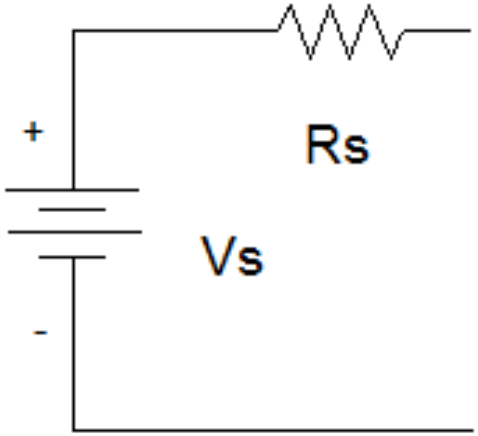

Limitations of Real Voltage Source

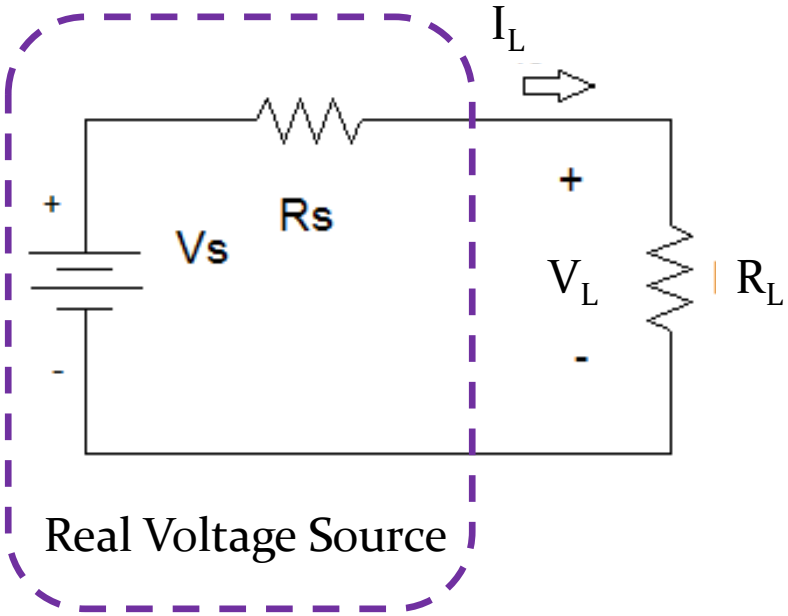

$$V_L = \frac{R_L}{R_L + R_S} V_S$$

$$I_L = V_L / R_L$$

Voltage Source Limitations

$R_L = 0\Omega$

$$V_L = 0\text{V}$$
$$I_{L\max} = V_S / R_S$$
$$P_L = 0\text{W}$$

$R_L = \infty\Omega$

$$V_L = V_S$$
$$I_{L\min} = 0\text{A}$$
$$\text{P}_L = 0\text{W}$$

Current Sources

Ideal

- An ideal current source has no internal resistance.
  - It can produce as much voltage as is needed to provide power to the rest of the circuit.

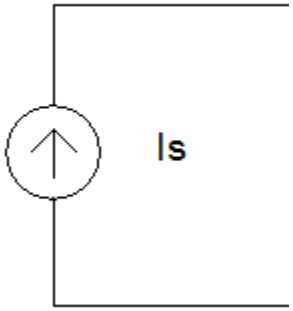

Real

- A real current sources is modeled as an ideal current source in parallel with a resistor.
  - Limitations on the maximum voltage and current.

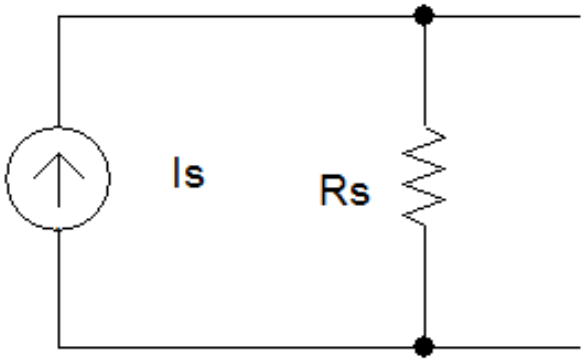

Limitations of Real Current Source

- Appear as the resistance of the load on the source approaches Rs.

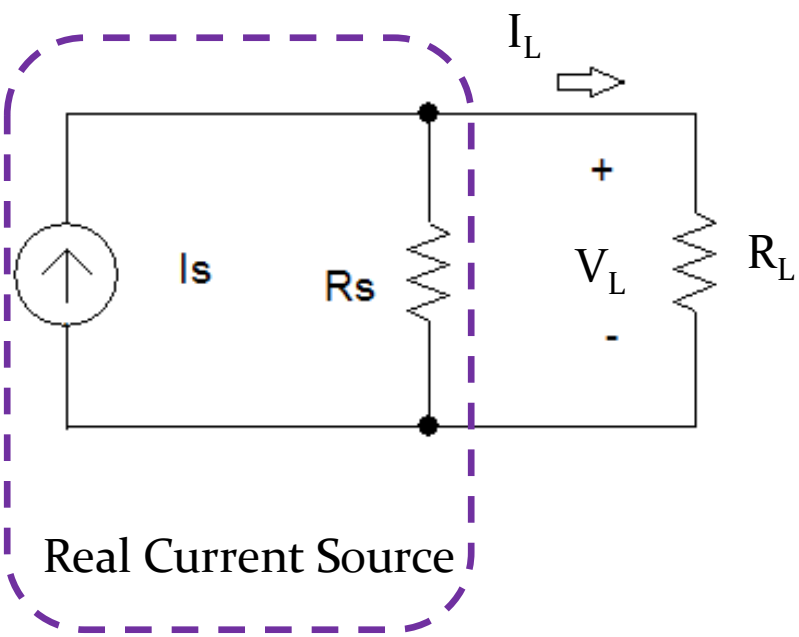

$$I_L = \frac{R_S}{R_L + R_S} I_S$$

$$V_L = I_L R_L$$

Current Source Limitations

$R_L = 0\Omega$

$$I_L = I_S$$
$$V_{L\min} = 0\text{V}$$
$$P_L = 0\text{W}$$

$R_L = \infty\Omega$

$$I_L = 0\text{A}$$
$$V_{L\max} = I_S R_S$$
$$\text{P}_\text{L} = 0\text{W}$$

Electronic Response

- For a real voltage source, what is the voltage across the load resistor when $R_s = R_L$?
- For a real current source, what is the current through the load resistor when $R_s = R_L$?

Equivalence

- An equivalent circuit is one in which the *i*-*v* characteristics are identical to that of the original circuit.
  - The magnitude and sign of the voltage and current at a particular measurement point are the same in the two circuits.

Equivalent Circuits

- R_L in both circuits must be identical.

  I_L and V_L in the left circuit = I_L and V_L on the left

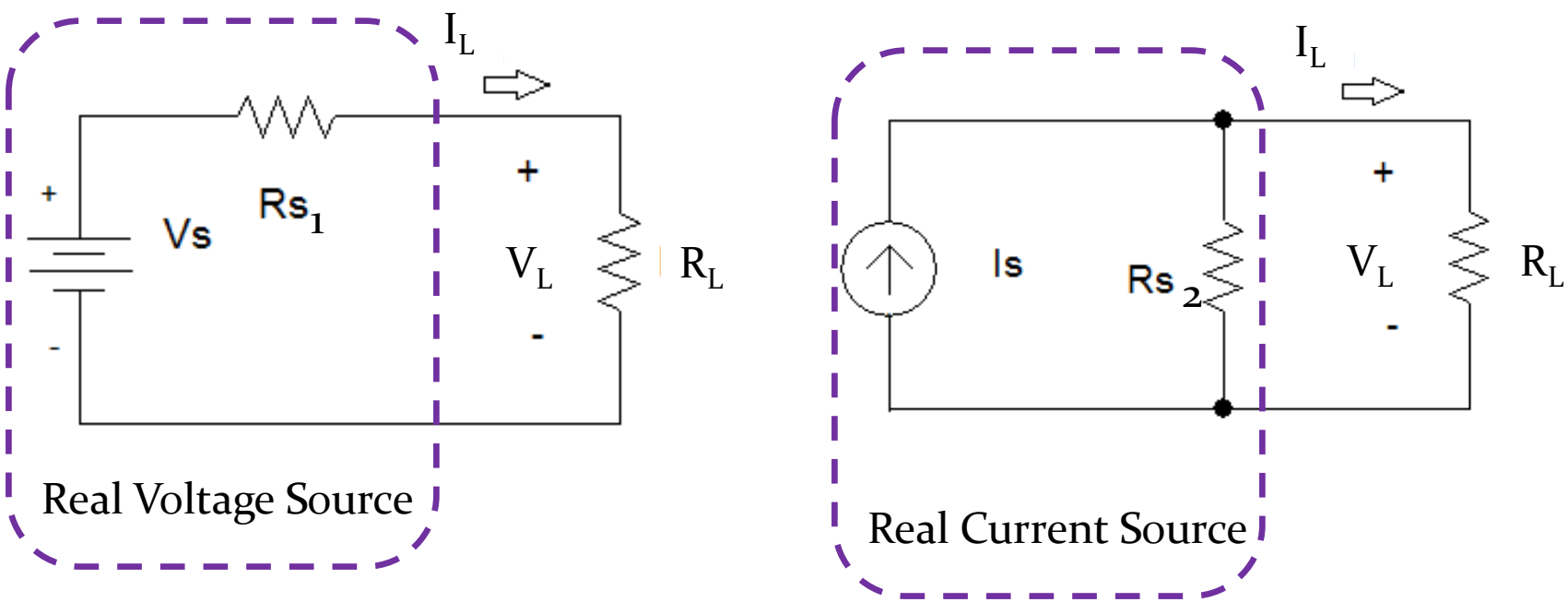

Example 10…

- Find an equivalent current source to replace Vs and Rs in the circuit below.

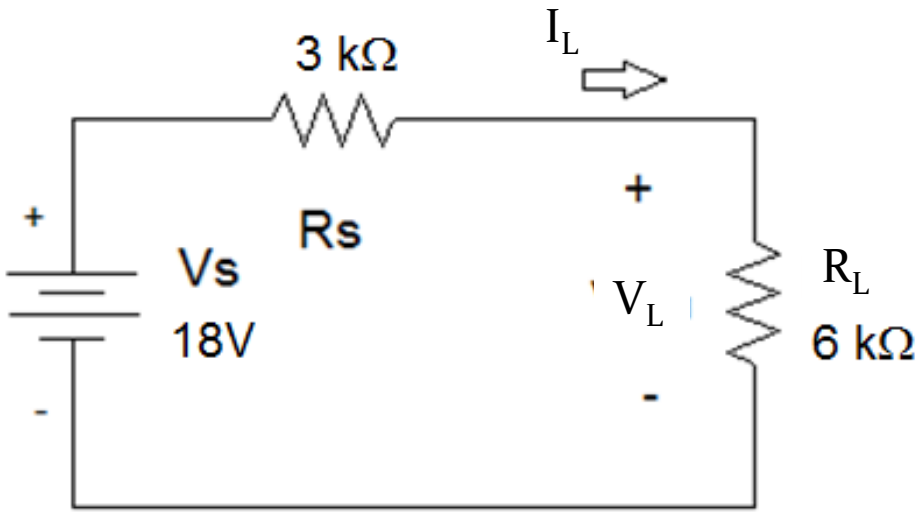

…Example 10…

- Find I_L and V_L.

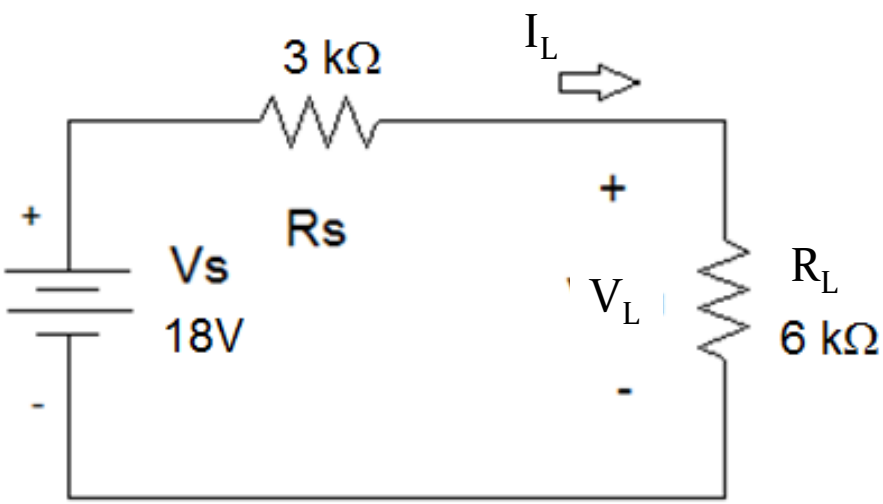

$$V_L = \frac{R_L}{R_L + R_S} V_S$$

$$V_L = \frac{6k\Omega}{6k\Omega + 3k\Omega} 18V = 12V$$

$$I_L = V_L / R_L$$

$$I_L = 12V / 6k\Omega = 2mA$$

$$P_{Vs} = P_L + P_{Rs}$$

$$P_{Vs} = 12V(2mA) + (18V - 12V)(2mA)$$

$$P_{Vs} = 36mW$$

…Example 10…

- There are an infinite number of equivalent circuits that contain a current source.
  - If, in parallel with the current source, Rs = ∞ Ω
    - Rs is an open circuit, which means that the current source is ideal.

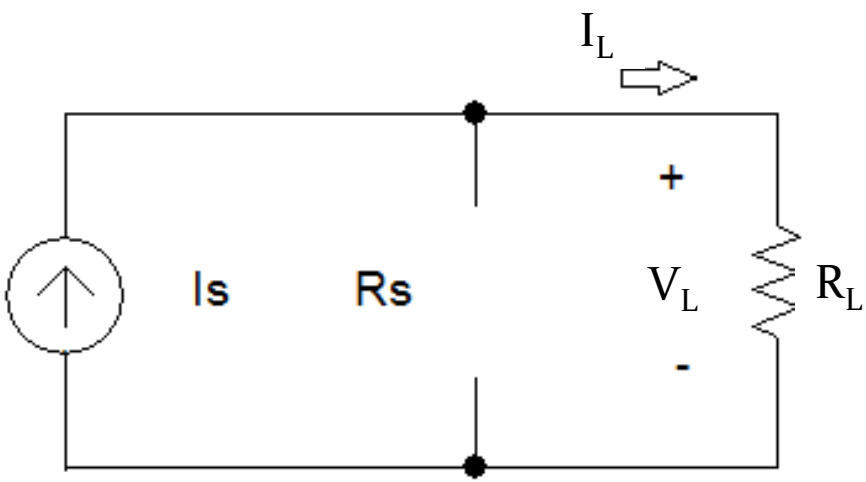

$$I_S = I_L$$

$$V_L = 2mA(6k\Omega) = 12V$$

$$P_L = V_L I_L = 12V(2mA) = 24mW$$

$$P_L = P_{Is} = 24mW$$

…Example 10…

If $R_S = 20\ k\Omega$

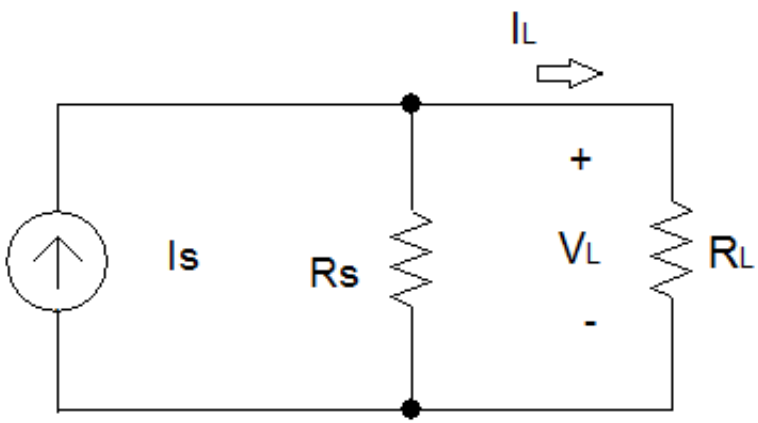

$$I_S = \frac{R_L + R_S}{R_S} I_L$$

$$I_S = \frac{6k\Omega + 20k\Omega}{20k\Omega} 2mA = 2.67mA$$

$$V_L = V_{Is} = I_L R_L = 12V$$

$$P_{Is} = P_L + P_{Rs} = V_L I_L + V_{Rs} I_{Rs}$$

$$P_{Is} = 12V(2mA) + 12V(2.67mA - 2mA)$$

$$P_{Is} = 32.0mW$$

…Example 10…

If $R_S = 6\ k\Omega$

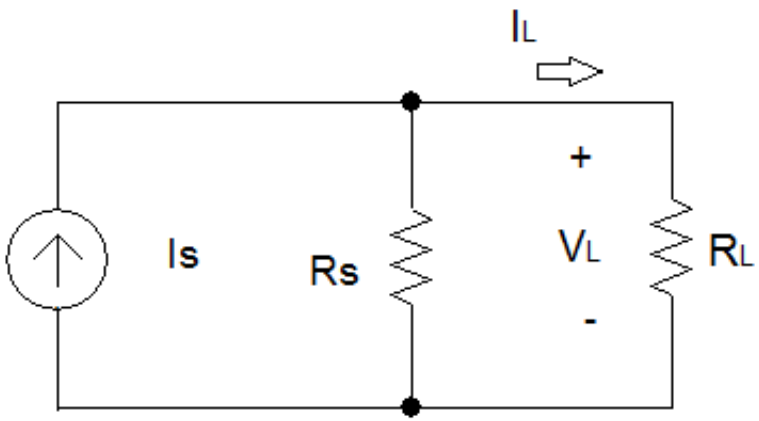

$$I_S = \frac{R_L + R_S}{R_S} I_L$$

$$I_S = \frac{6k\Omega + 6k\Omega}{6k\Omega} 2mA = 4mA$$

$$V_L = V_{Is} = I_L R_L = 12V$$

$$P_{Is} = P_L + P_{Rs} = V_L I_L + V_{Rs} I_{Rs}$$

$$P_{Is} = 12V(2mA) + 12V(4mA - 2mA)$$

$$P_{Is} = 48mW$$

…Example 10…

If $R_S = 3\ k\Omega$

$$I_S = \frac{R_L + R_S}{R_S} I_L$$

$$I_S = \frac{6k\Omega + 3k\Omega}{3k\Omega} 2mA = 6mA$$

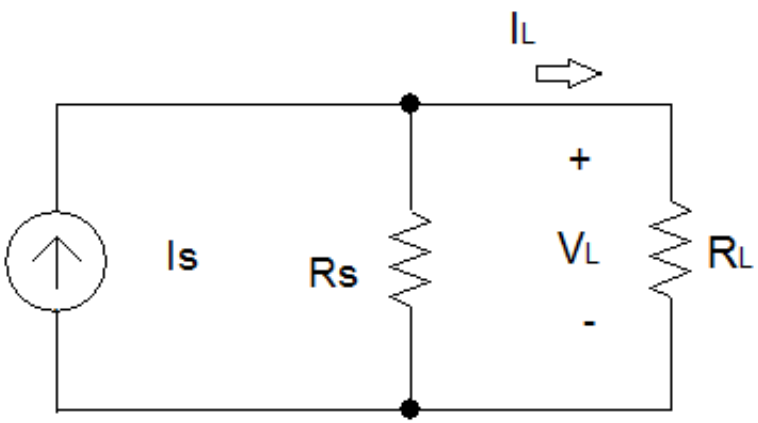

$$V_L = V_{Is} = I_L R_L = 12V$$

$$P_{Is} = P_L + P_{Rs} = V_L I_L + V_{Rs} I_{Rs}$$

$$P_{Is} = 12V(2mA) + 12V(6mA - 2mA)$$

$$P_{Is} = 72mW$$

…Example 10

- Current and power that the ideal current source needs to generate in order to supply the same current and voltage to a load increases as R_S decreases.
  - Note: Rs can not be equal to 0 Ω.
- The power dissipated by R_L is 50% of the power generated by the ideal current source
  - when $R_S = R_L$.

Example 11…

- Find an equivalent voltage source to replace Is and Rs in the circuit below.

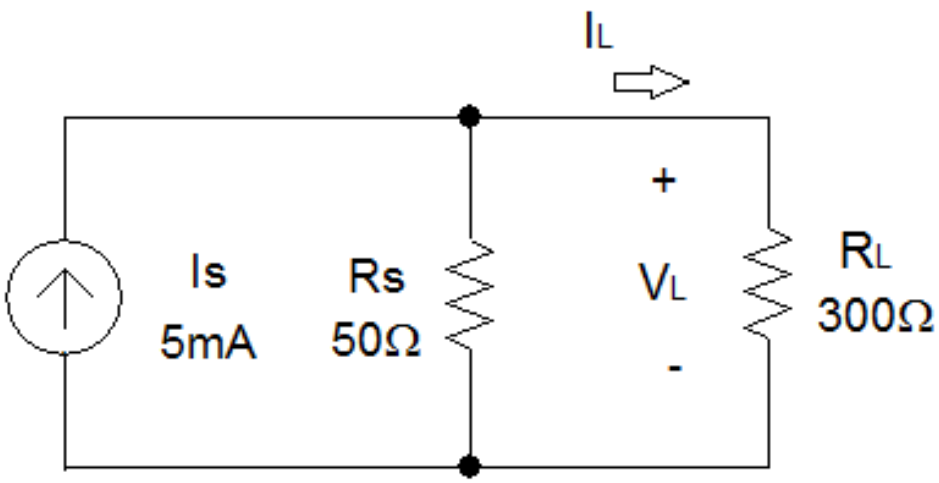

…Example 11…

- Find I_L and V_L.

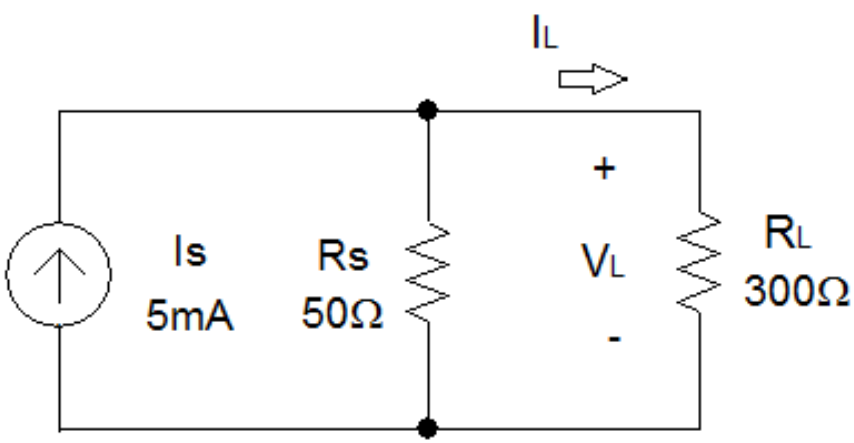

$$I_L = \frac{50\Omega}{300\Omega + 50\Omega} I_S$$

$$I_L = 0.714mA$$

$$V_L = I_L R_L$$

$$V_L = 0.714mA(300\Omega) = 0.214V$$

$$P_{Vs} = P_L + P_{Rs}$$

$$P_{Vs} = 0.214V(0.714mA) + 0.214V(5mA - 0.714mA)$$

$$P_{Vs} = 1.07mW$$

…Example 11…

- There are an infinite number of equivalent circuits that contain a voltage source.
  - If, in series with the voltage source, Rs = 0 Ω
    - Rs is a short circuit, which means that the voltage source is ideal.

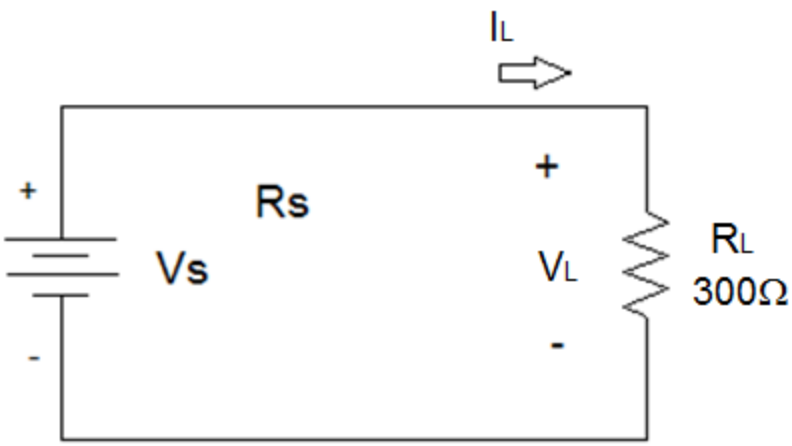

$$V_S = V_L = 0.214V$$

$$I_L = V_L / R_L = 0.214V / 300\Omega$$

$$I_L = 0.714mA$$

$$P_L = V_L I_L = 0.214V(0.714mA)$$

$$P_L = 0.153mW$$

$$P_L = P_{Vs} = 0.153mW$$

…Example 11…

If $R_S = 50\ \Omega$

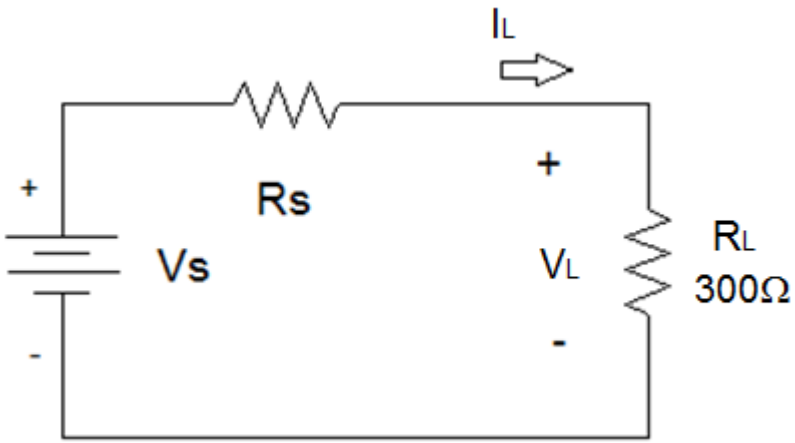

$$V_S = \frac{R_L + R_S}{R_L} V_L$$

$$V_S = \frac{300\Omega + 50\Omega}{300\Omega} 0.214V = 0.25V$$

$$I_L = I_{Vs} = V_L / R_L = 0.714mA$$

$$P_{Vs} = P_L + P_{Rs} = V_L I_L + V_{Rs} I_{Rs}$$

$$P_{Vs} = 0.214V(0.714A)$$

$$+ (0.25V - 0.214V)(0.714mA)$$

$$P_{Vs} = 0.179mW$$

…Example 11…

If $R_S = 300\ \Omega$

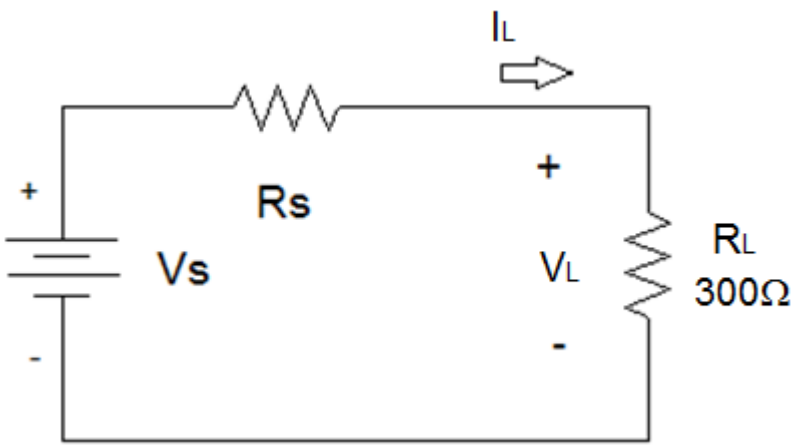

$$V_S = \frac{R_L + R_S}{R_L} V_L$$

$$V_S = \frac{300\Omega + 300\Omega}{300\Omega} 0.214V = 0.418V$$

$$I_L = I_{Vs} = V_L / R_L = 0.714mA$$

$$P_{Vs} = P_L + P_{Rs} = V_L I_L + V_{Rs} I_{Rs}$$

$$P_{Vs} = 0.214V(0.714A)$$

$$+ (0.418V - 0.214V)(0.714mA)$$

$$P_{Vs} = 0.306mW$$

…Example 11…

If $R_S = 1\ k\Omega$

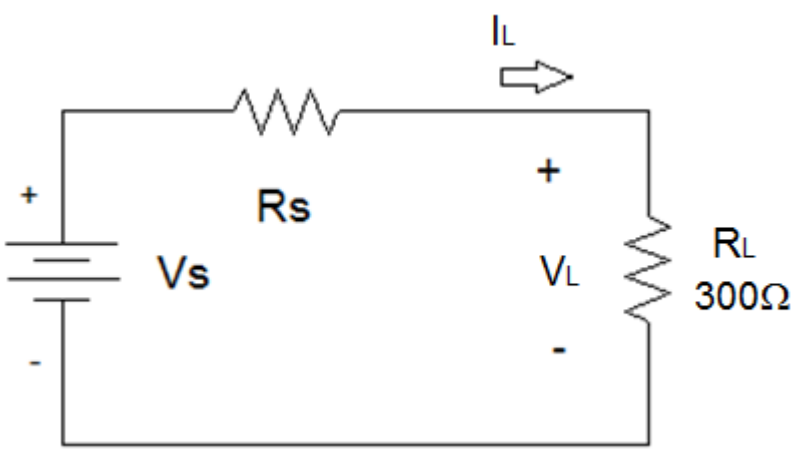

$$V_S = \frac{R_L + R_S}{R_L} V_L$$

$$V_S = \frac{300\Omega + 1k\Omega}{300\Omega} 0.214V = 0.927V$$

$$I_L = I_{Vs} = V_L / R_L = 0.714mA$$

$$P_{Vs} = P_L + P_{Rs} = V_L I_L + V_{Rs} I_{Rs}$$

$$P_{Vs} = 0.214V(0.714A)$$

$$+ (0.927V - 0.214V)(0.714mA)$$

$$P_{Vs} = 0.662mW$$

…Example 11

- Voltage and power that the ideal voltage source needs to supply to the circuit increases as R_S increases.
  - Note: Rs can not be equal to ∞ Ω.
- The power dissipated by R_L is 50% of the power generated by the ideal voltage source
  - when $R_S = R_L$.

Summary

- An equivalent circuit is a circuit where the voltage across and the current flowing through a load R_L are identical.
  - As the shunt resistor in a real current source decreases in magnitude, the current produced by the ideal current source must increase.
  - As the series resistor in a real voltage source increases in magnitude, the voltage produced by the ideal voltage source must increase.
    - The power dissipated by R_L is 50% of the power produced by the ideal source when $R_L = R_S$.

Example 12

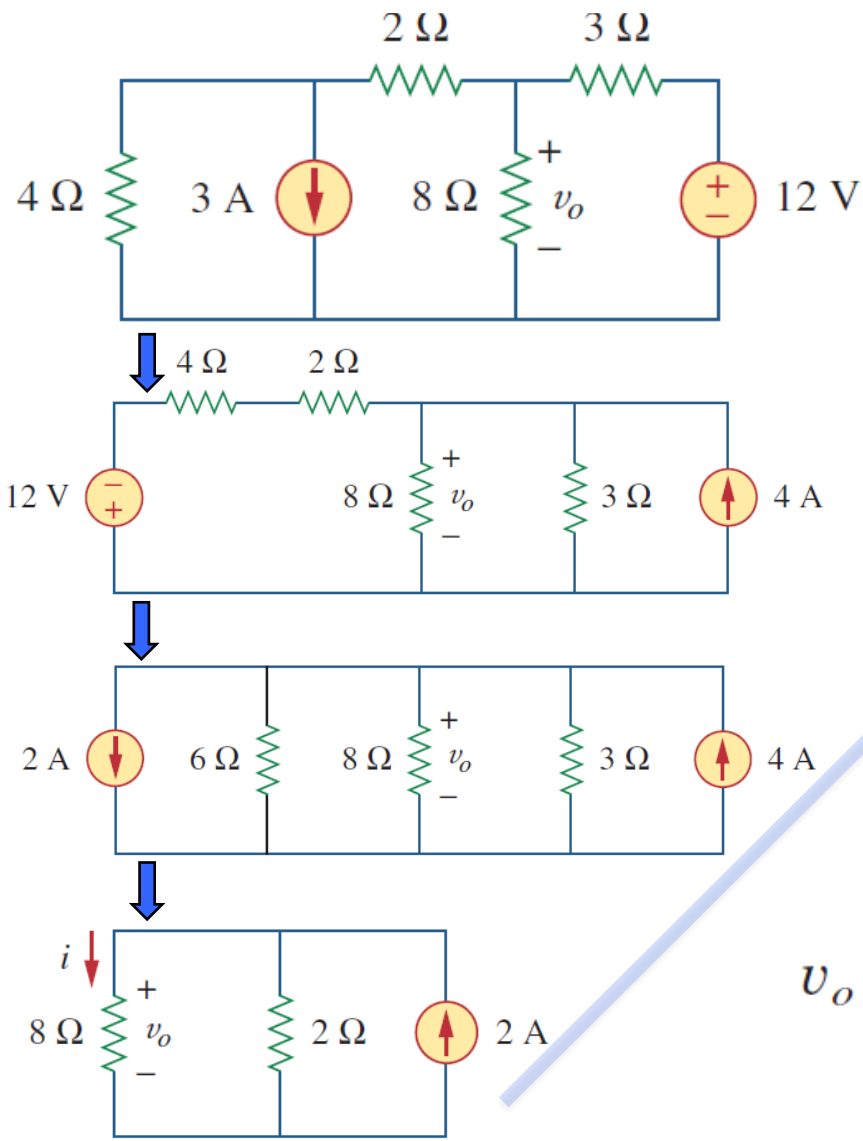

- Use source transformation to find v_0 in the circuit.
  - Use current division

$$i = \frac{2}{2+8}(2) = 0.4 \text{ A}$$

$$v_o = 8i = 8(0.4) = 3.2 \text{ V}$$

  - or

$$v_o = (8 \parallel 2)(2 \text{ A}) = \frac{8 \times 2}{10}(2) = 3.2 \text{ V}$$

Example 13

- Use source transformation to find i_0 in the circuit.

Answer: 1.78 A.

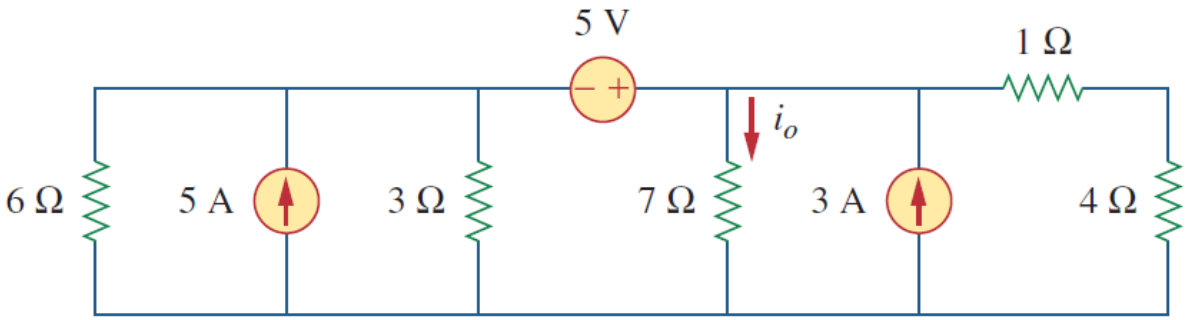

Thévenin and Norton Equivalents

Thévenin & Norton Equivalents

- L. C. Thévenin -- French engineer; published his theorem in 1883
- E. L. Norton -- scientist with Bell Telephone Laboratories

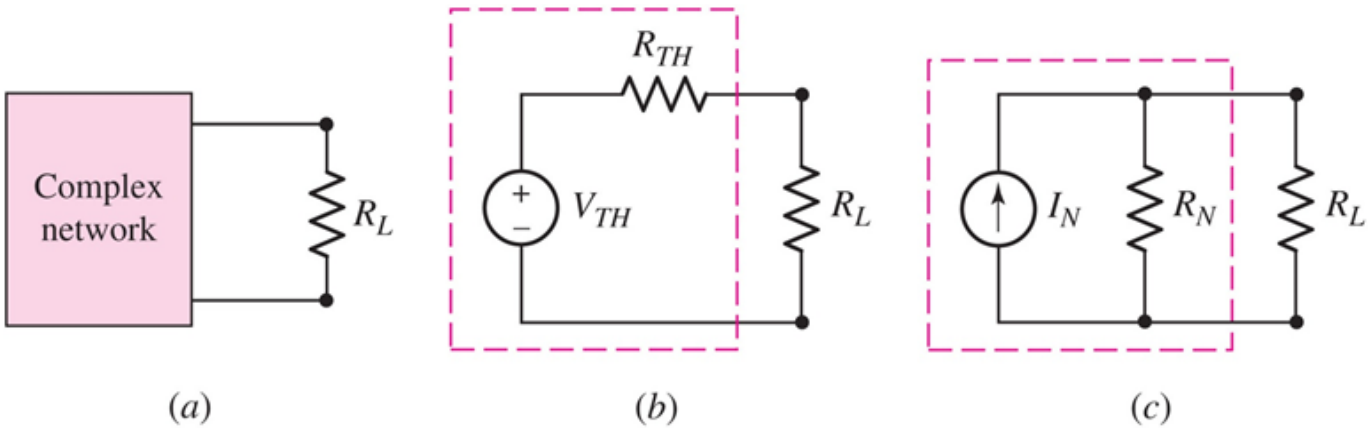

- Any linear circuit network at two terminals may be replaced with a Thévenin equivalent (V_{TH}, R_{TH}) or a Norton equivalent (I_N, R_N).
- The equivalent will behave the same as the original network (v_L, i_L) with respect to those two terminals.

Thévenin Equivalent, Method 1

- Determining V_{TH} and R_{TH} with respect to two terminals:

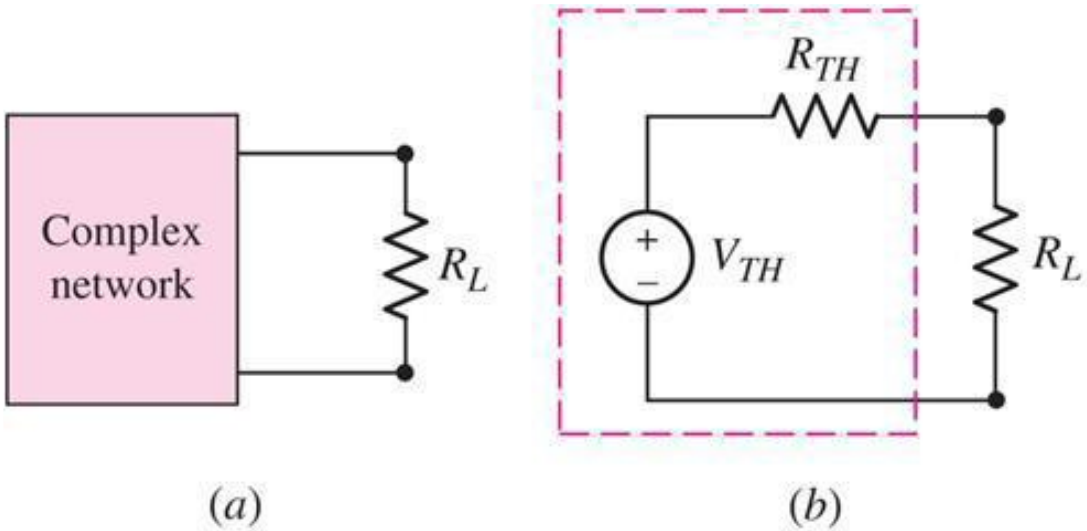

1. Use repeated source transformations to arrive at a single voltage source in series with a single series resistance.

Example 14

- Determine the Thévenin equivalent of Network A, and compute the power delivered to the load resistor R_L.

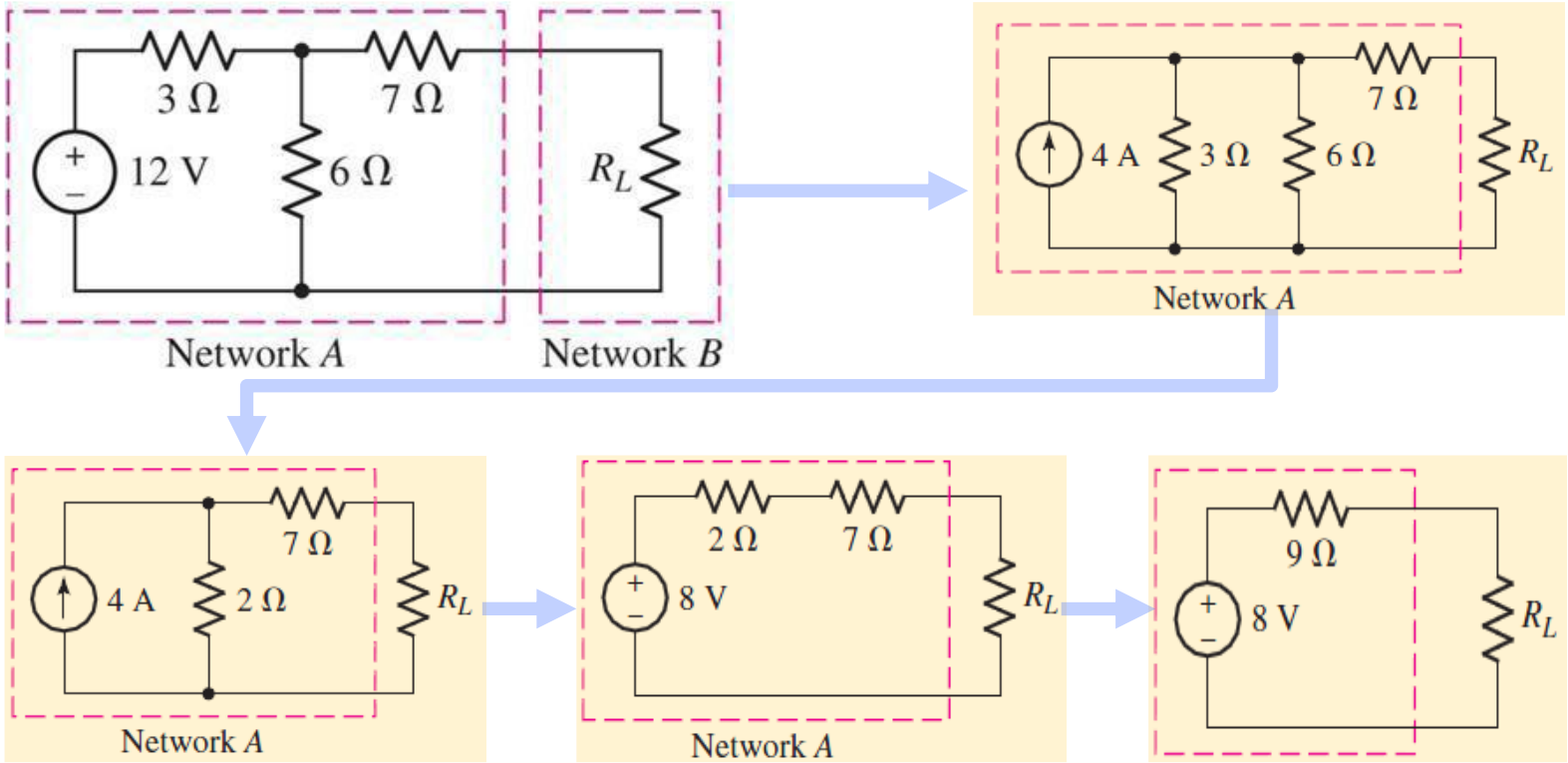

- Power delivered to the load $P_L = \left(\frac{8}{9 + R_L}\right)^2 R_L$

Thévenin Equivalent, Method 2

- Determining V_{TH} and R_{TH} with respect to two terminals:

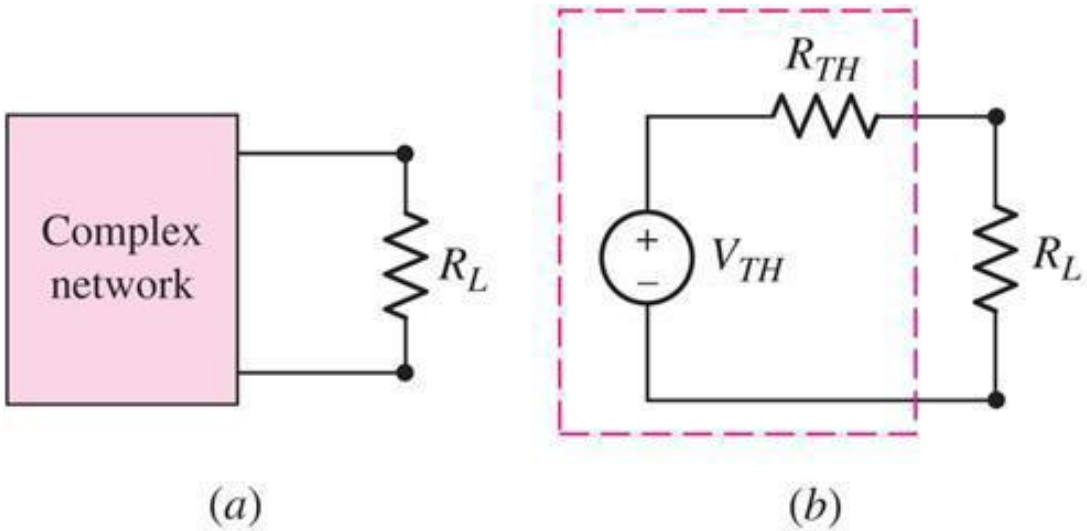

2. Open the load and determine the open-circuit voltage (V_{OC}), then short the load and determine the short-circuit current (I_{SC}).

Example 15

- Determine the Thévenin equivalent of Network *A* using open-circuit voltage and short-circuit current.

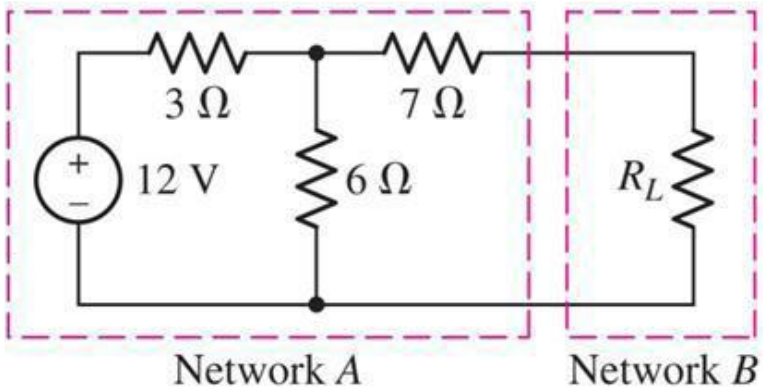

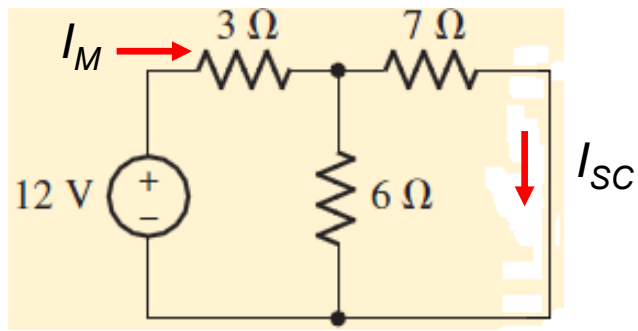

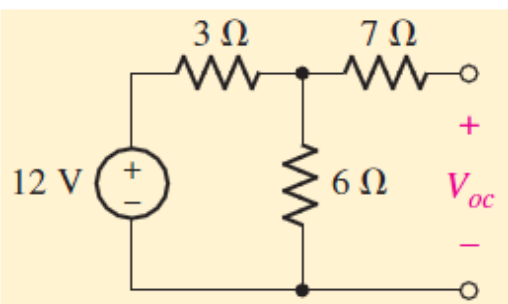

$$V_{oc} = 12\left(\frac{6}{3+6}\right) = 8 \text{ V}$$

$I_M = 12 / (3+7\|6) = 1.9259$ A

$I_{SC} = (1.9259\times6) / 13 = 0.8889$ A

$R_{TH} = V_{OC} / I_{SC} = 8/0.8889 = 9\ \Omega$

$V_{TH} = V_{OC} = 8$ V

Thévenin Equivalent, Method 3

- Determining V_{TH} and R_{TH} with respect to two terminals:

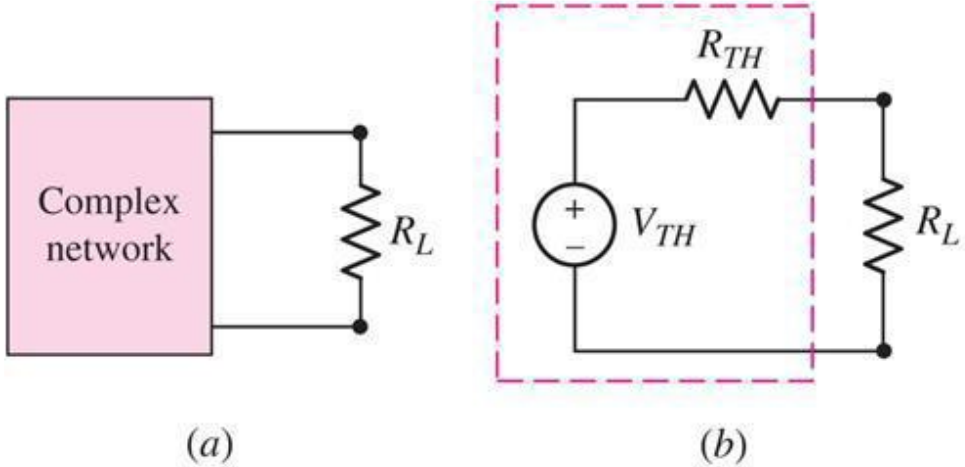

3. Open the load and determine the open-circuit voltage (V_{OC}), then deactivate all independent sources (short-circuit the V sources and open-circuit the I sources) and find the equivalent resistance (R_{eq}).

$$V_{TH} = V_{OC} \qquad R_{TH} = R_{eq}$$

Example 16

- Determine the Thévenin equivalent of Network *A* by deactivating the independent sources.

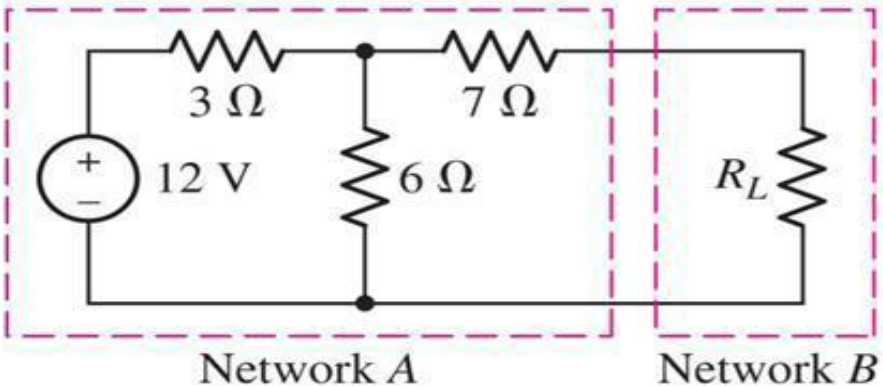

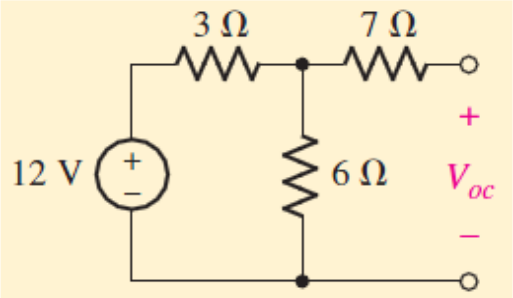

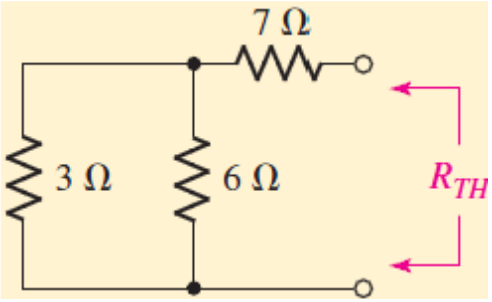

$$V_{oc} = 12\left(\frac{6}{3+6}\right) = 8 \text{ V}$$

$$R_{TH} = 7+(6\|3) = 9\ \Omega$$
$$V_{TH} = V_{OC} = 8 \text{ V}$$

Thévenin Equivalent, Method 4

- Determining V_{TH} and R_{TH} with respect to two terminals:

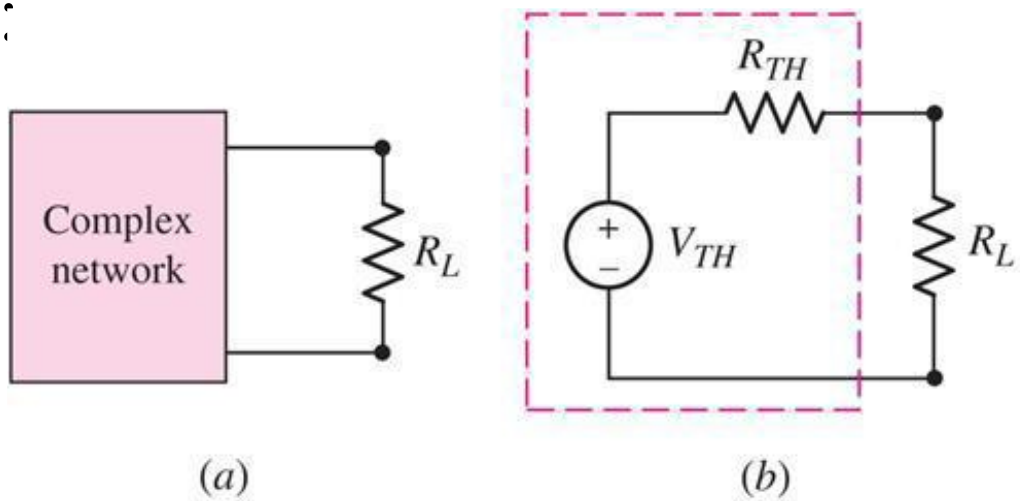

4. Open the load and determine the open-circuit voltage (V_{OC}), then deactivate all independent sources and apply a test source.

$$V_{TH} = V_{OC} \qquad R_{TH} = V_{test} / I_{test}$$

- The only solution method for finding V_{TH} and R_{TH} (of the 4 presented in the prior slides) that is guaranteed to work when the circuit includes dependent sources is the test-source method.

Example 17

- Determine the Thévenin equivalent of Network *A* by using a test source.

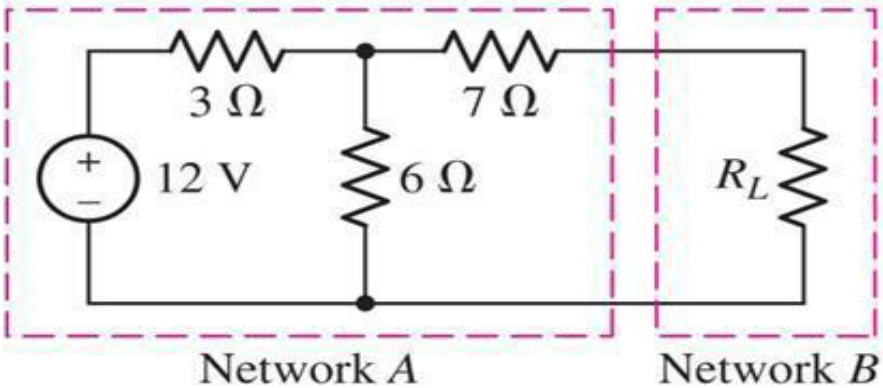

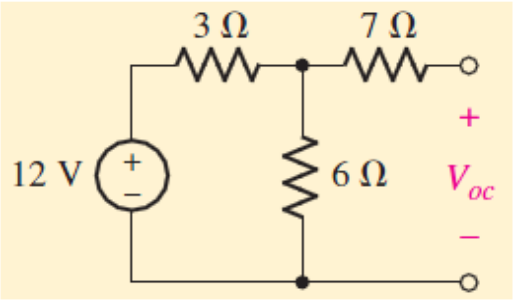

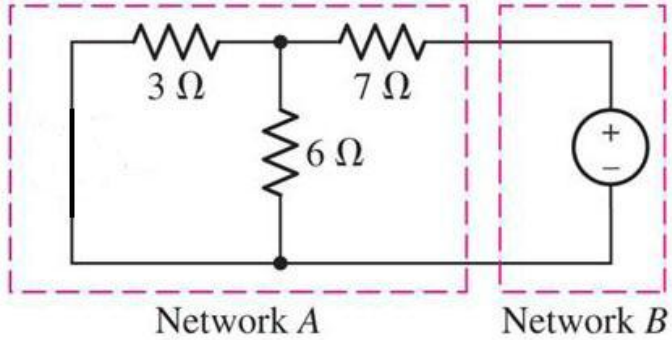

$$V_{oc} = 12\left(\frac{6}{3+6}\right) = 8 \text{ V}$$

I_{test} = 1 / (7+6||3) = 0111 A

$R_{test} = V_{test} / I_{test} = 1/0.111 = 9\ \Omega$

Example 18

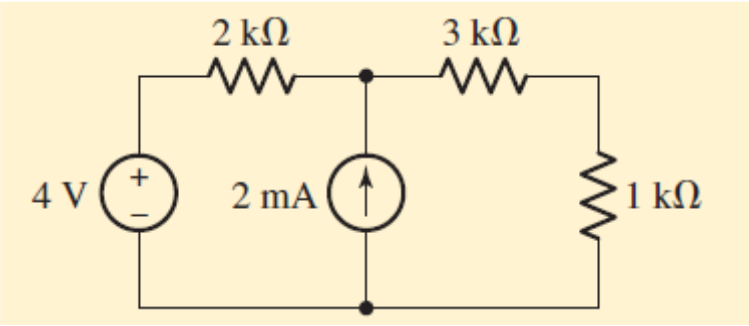

- Determine the Thévenin and Norton equivalent circuits for the network faced by the 1 kΩ resistor.

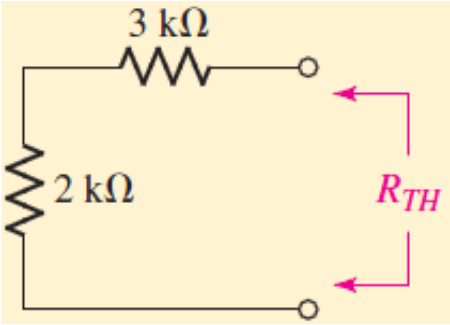

$R_{TH} = 5\ \text{k}\Omega$

Using superposition:

$V_{oc|4v} = 4\ \text{V}$

$V_{oc|2mA} = 0.002 \times 2000 = 4\ \text{V}$

$V_{oc} = V_{oc|4v} + V_{oc|2mA} = 4 + 4 = 8\ \text{V}$

Thévenin

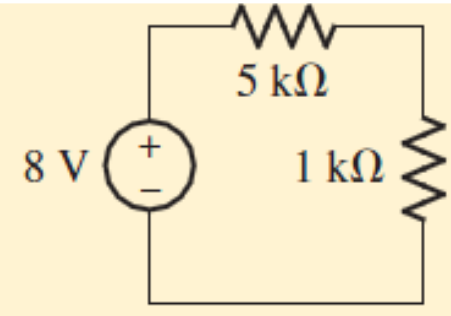

Norton

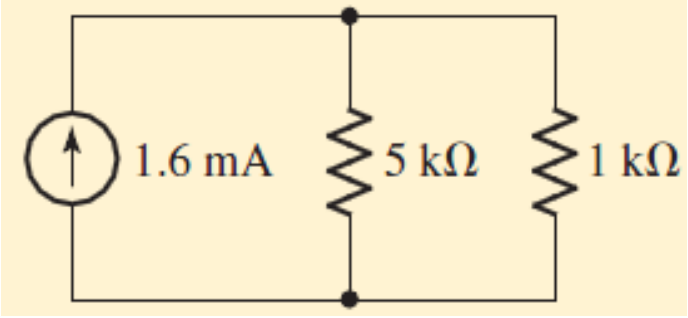

Example 19

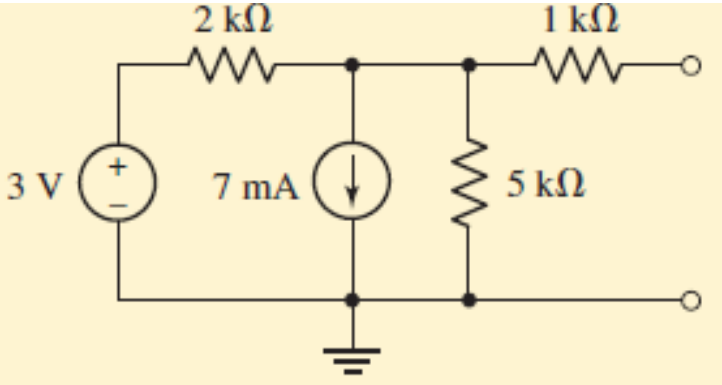

- Determine the Thévenin and Norton equivalents of the circuit.

Ans: –7.857 V, –3.235 mA, 2.429 kΩ.

Example 20

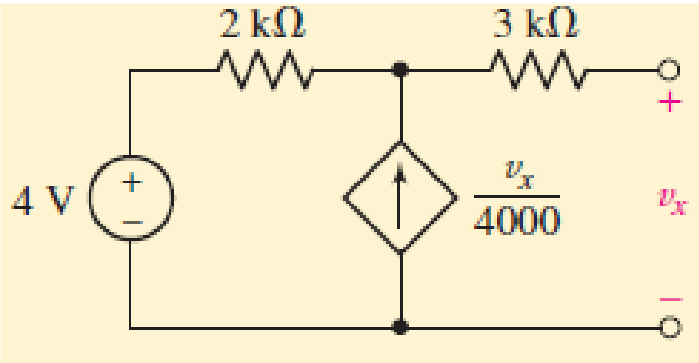

- Determine the Thévenin equivalent of this network at the open-circuit terminals.

– To find V_{OC} we note that $v_X = V_{OC}$ and that the dependent source current must pass through the 2 k resistor, since no current can flow through the 3 k resistor.

$$-4 + 2 \times 10^3 \left(-\frac{v_x}{4000}\right) + 3 \times 10^3(0) + v_x = 0$$

$$v_x = 8 \text{ V} = V_{oc}$$

– The dependent source prevents us from determining R_{TH} directly for the inactive network through resistance combination; we therefore seek I_{SC}.

– Upon short-circuiting the output terminals, it is apparent that $v_x = 0$ and the dependent current source is not active.

$$I_{sc} = 4/(5 \times 10^3) = 0.8 \text{ mA}.$$

$$R_{TH} = \frac{V_{oc}}{I_{sc}} = \frac{8}{0.8 \times 10^{-3}} = 10 \text{ k}\Omega$$

Example 21

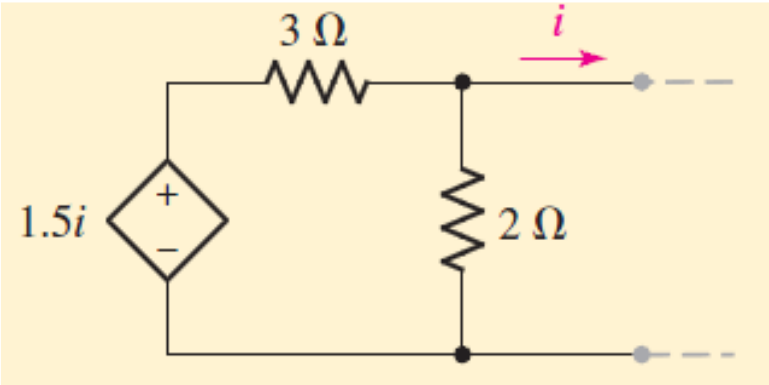

- Find the Thévenin equivalent of this circuit.
  - The rightmost terminals are already open-circuited, hence $i = 0$.
  - Consequently, the dependent source is inactive, so $v_{oc} = 0$.
  - We apply a 1 A source externally, measure the voltage V_{test}

$$R_{TH} = v_{\text{test}}/1$$

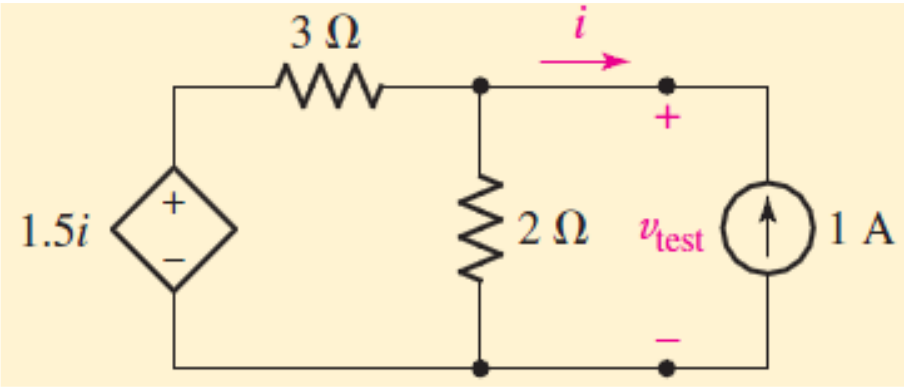

$$\frac{v_{\text{test}} - 1.5(-1)}{3} + \frac{v_{\text{test}}}{2} = 1$$

$$v_{\text{test}} = 0.6 \text{ V}$$

$$R_{TH} = 0.6\ \Omega$$

Thevenin equivalent

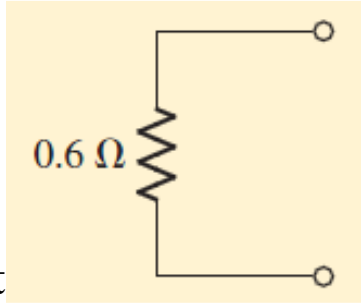

Power from a Practical Source

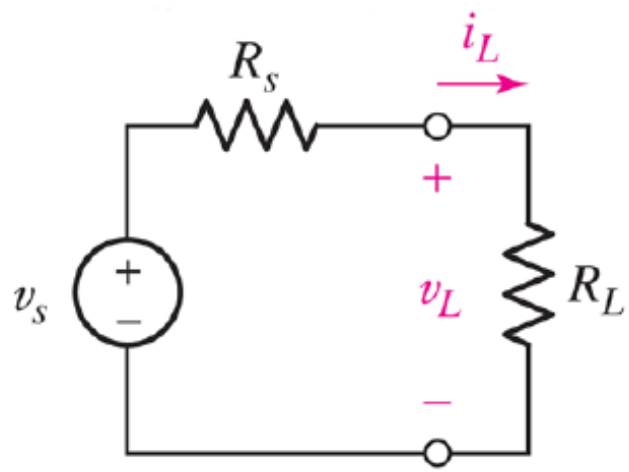

- The power delivered to a load from a practical voltage source is

$$p_L = i_L \cdot v_L = \frac{v_L^{\,2}}{R_L} = \frac{1}{R_L}\left[v_s \cdot \frac{R_L}{R_s + R_L}\right]^2 = \frac{v_s^{\,2} R_L}{\left(R_s + R_L\right)^2}$$

Maximum Power Transfer

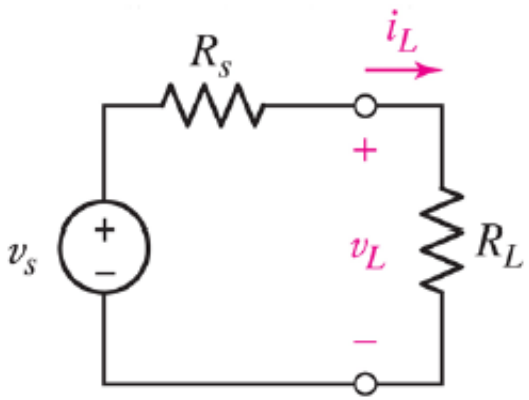

$$p_L = \frac{v_s^{\,2} R_L}{(R_s + R_L)^2}$$

The maximum value of p_L vs. R_L occurs when $\dfrac{d}{dR_L} p_L = 0$

$$\frac{d}{dR_L} p_L = \frac{(R_s + R_L)^2 v_s^{\,2} - 2 v_s^{\,2} R_L (R_s + R_L)}{(R_s + R_L)^4}$$

if $\boxed{R_L = R_s}$, $\dfrac{d}{dR_L} p_L = 0$

Maximum power is delivered to the load when the **load resistance is equal to the Thevenin resistance of the source**.

Example 22

- The circuit shown in below is a model for the common-emitter bipolar junction transistor amplifier.
  - Choose a load resistance so that maximum power is transferred to it from the amplifier, and calculate the actual power absorbed.

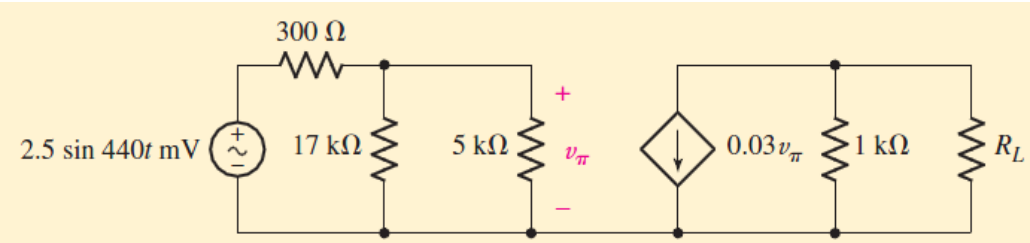

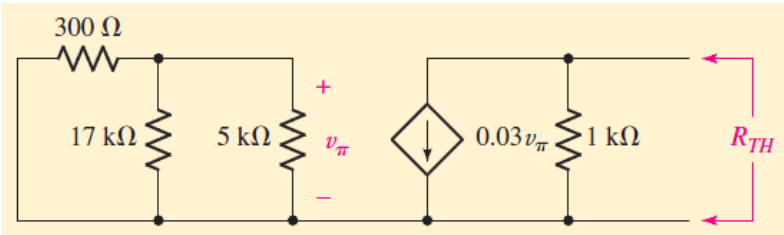

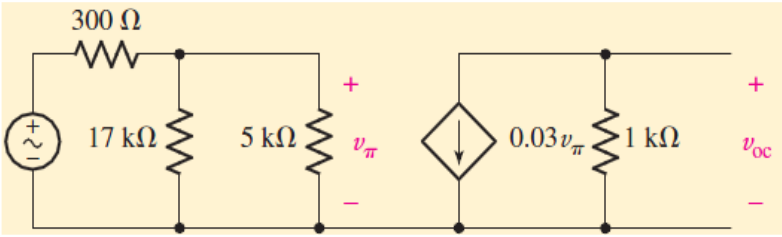

$$R_{TH} = 1\ \text{k}\Omega.$$

$$v_{oc} = -0.03v_\pi(1000) = -30v_\pi$$

$$v_\pi = (2.5 \times 10^{-3} \sin 440t)\left(\frac{3864}{300 + 3864}\right)$$

$$p_{max} = \frac{v_{TH}^2}{4R_{TH}} = \boxed{1.211 \sin^2 440t\ \mu\text{W}}$$

Example 23

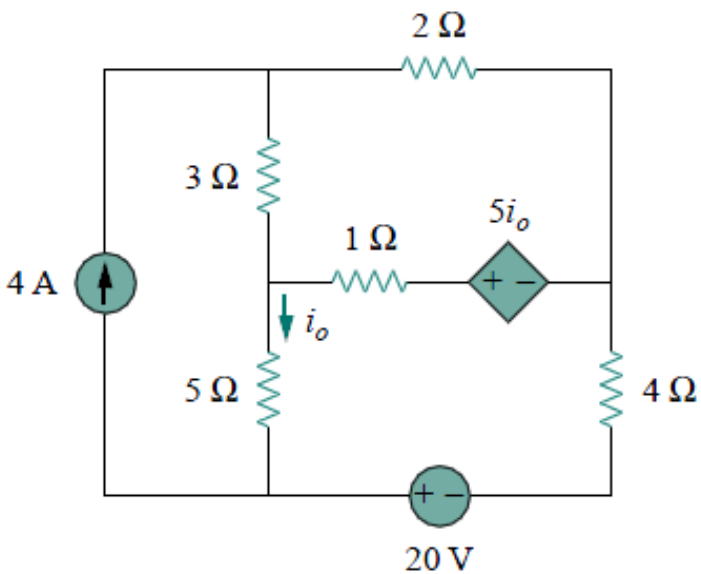

- Find i_0 in the circuit using superposition.

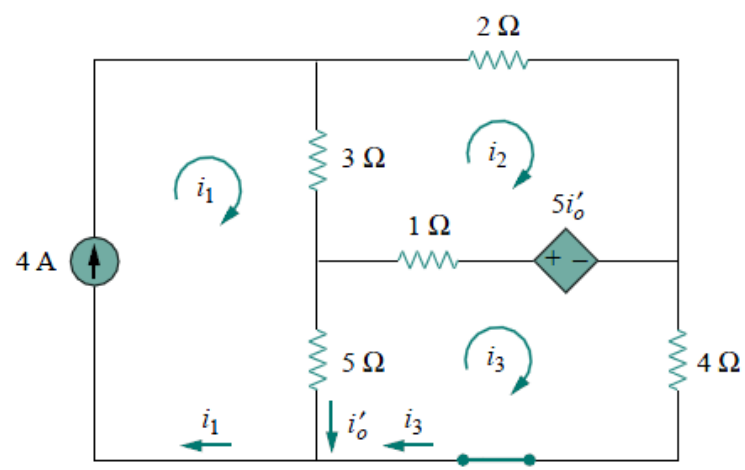

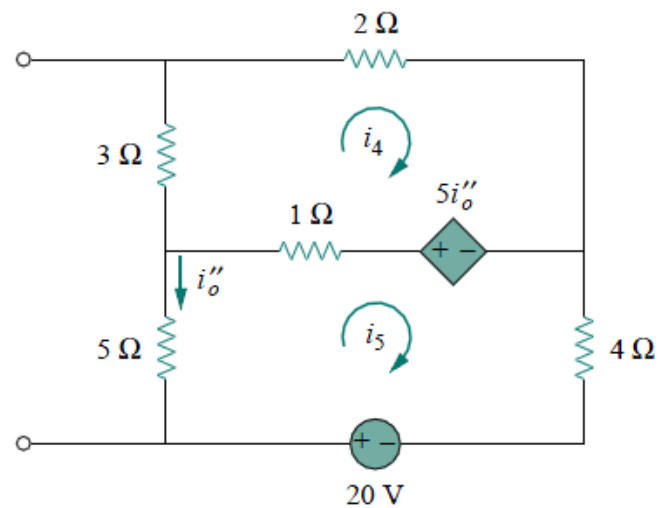

Example 24

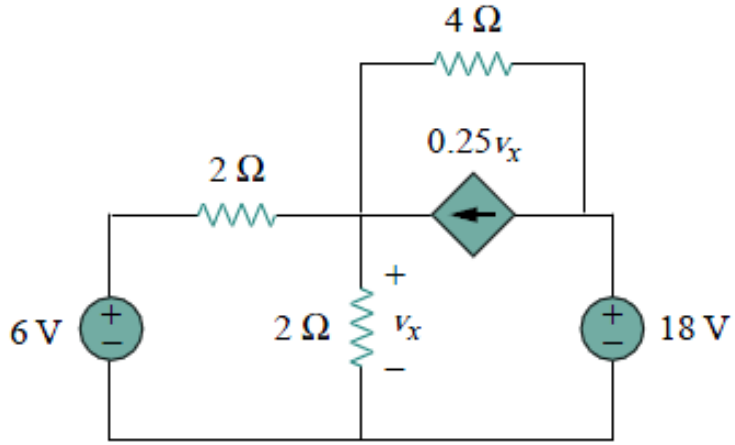

- Find v_x in the circuit using source transformation.

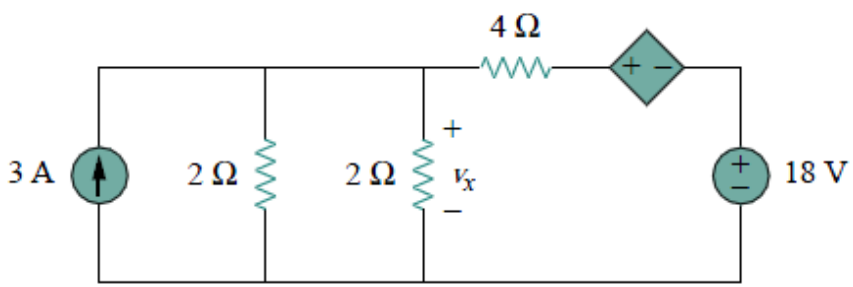

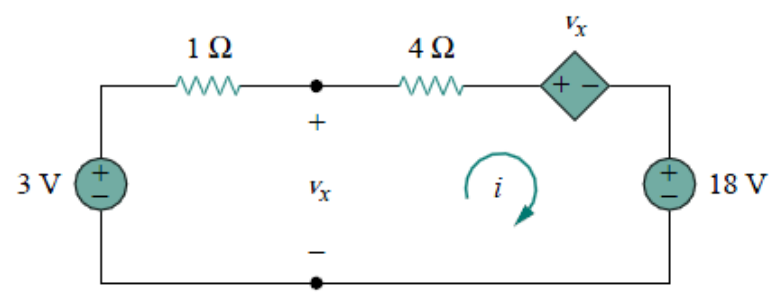

Example 25

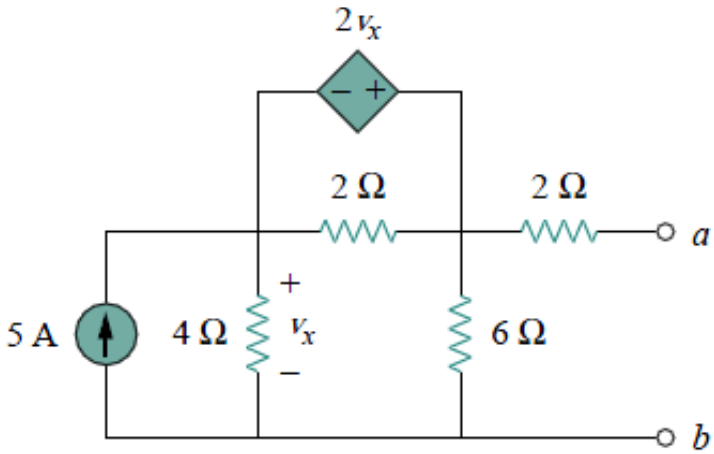

- Find the Thévenin equivalent of this circuit.

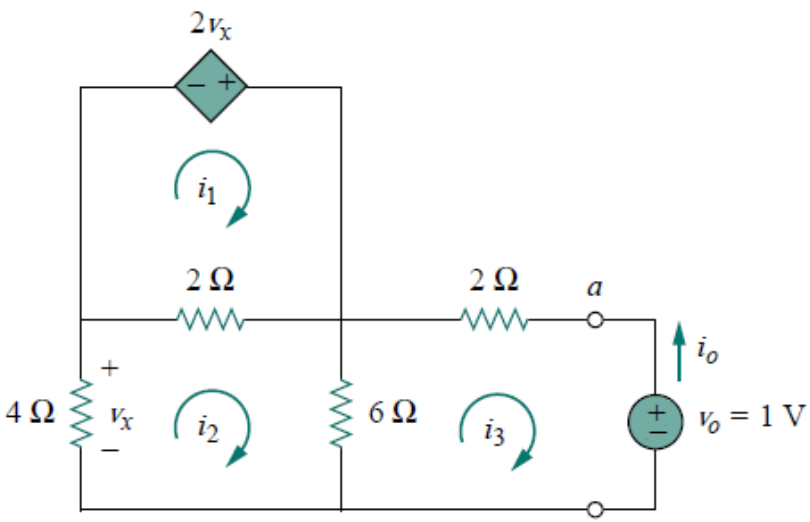

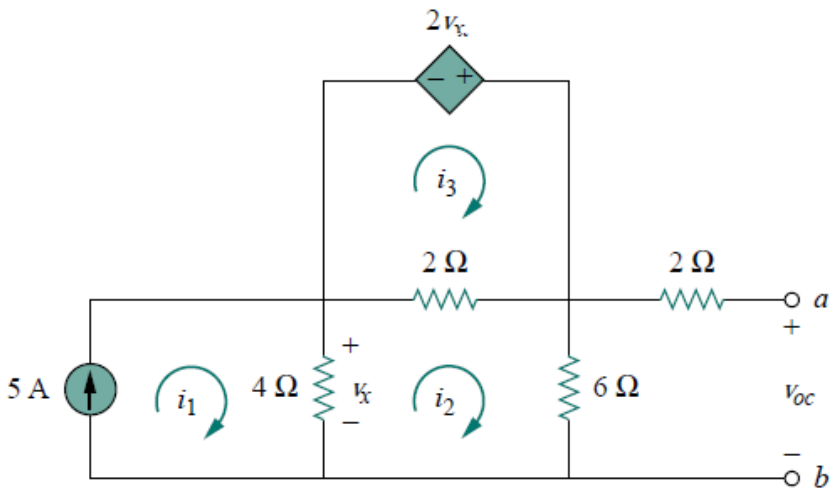

Example 25

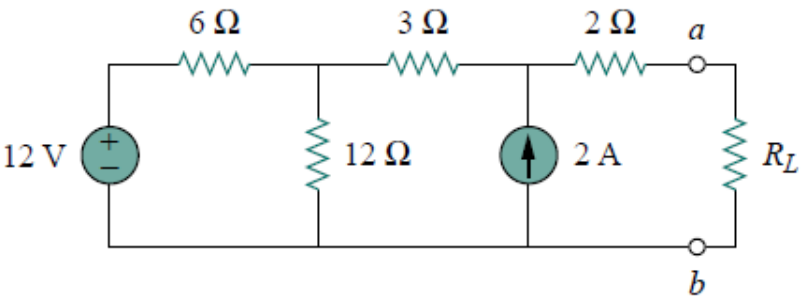
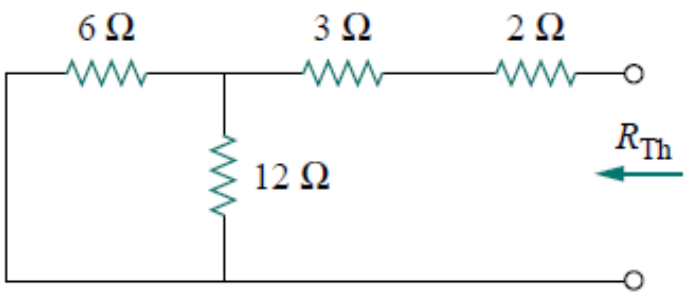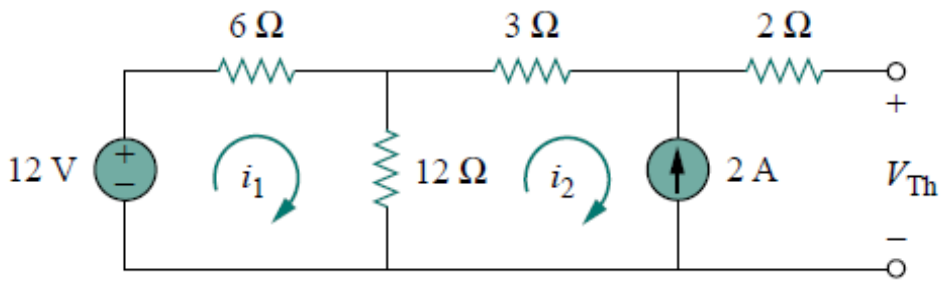
- Find the value of R_L for maximum power transfer in the circuit.
- Find the maximum power.