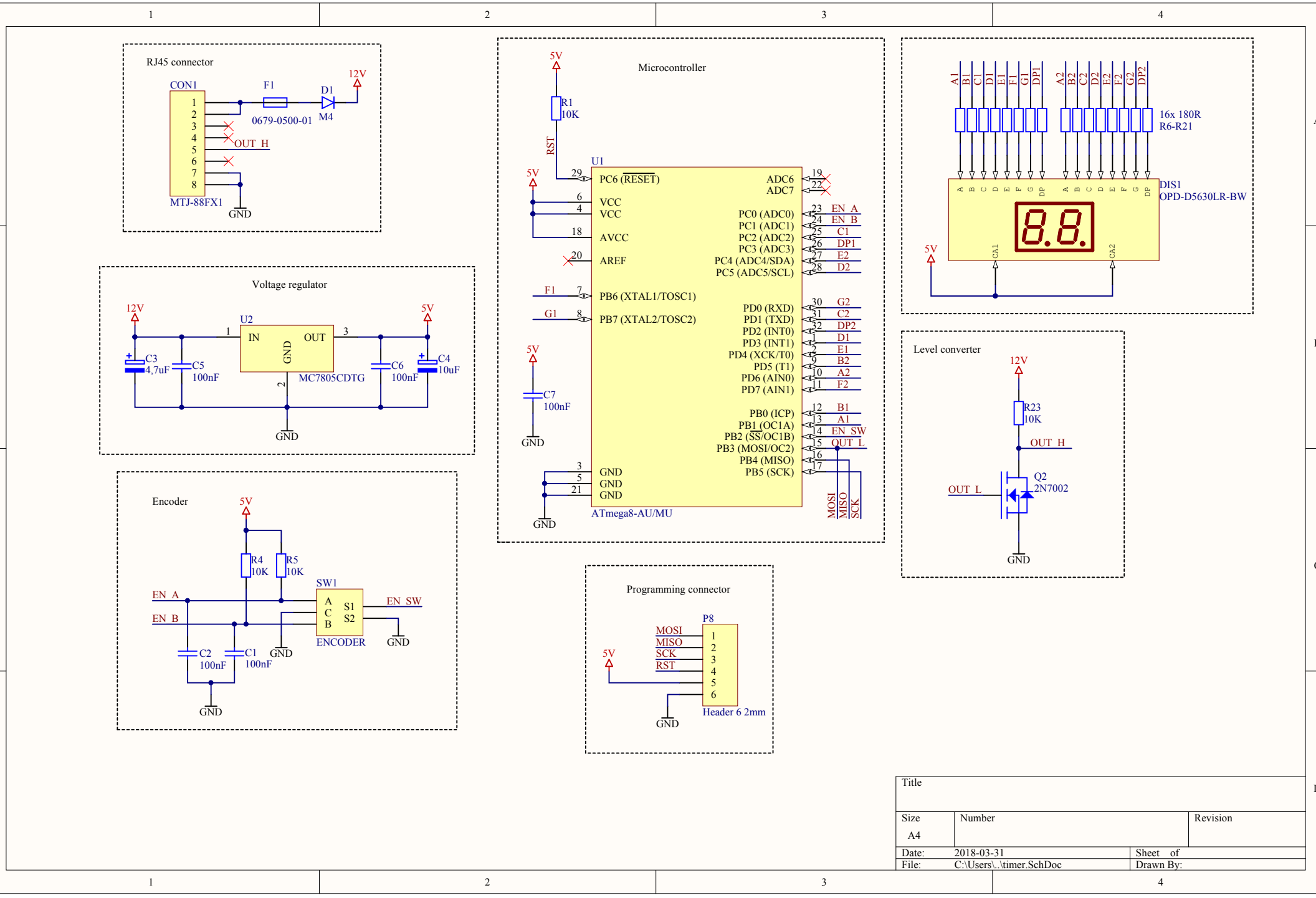
RJ45 connector
CON1
MTJ-88FX1
F1
0679-0500-01
D1
M4
12V
OUT_H
GND
Voltage regulator
12V
5V
U2
IN
OUT
GND
MC7805CDTG
C3
4,7uF
C5
100nF
C6
100nF
C4
10uF
Encoder
5V
R4
10K
R5
10K
SW1
EN_A
EN_B
A
C
B
S1
S2
EN_SW
ENCODER
C2
100nF
C1
100nF
Microcontroller
R1
10K
RST
U1
PC6 (RESET)
VCC
AVCC
AREF
PB6 (XTAL1/TOSC1)
PB7 (XTAL2/TOSC2)
GND
ADC6
ADC7
PC0 (ADC0)
PC1 (ADC1)
PC2 (ADC2)
PC3 (ADC3)
PC4 (ADC4/SDA)
PC5 (ADC5/SCL)
PD0 (RXD)
PD1 (TXD)
PD2 (INT0)
PD3 (INT1)
PD4 (XCK/T0)
PD5 (T1)
PD6 (AIN0)
PD7 (AIN1)
PB0 (ICP)
PB1 (OC1A)
PB2 (SS/OC1B)
PB3 (MOSI/OC2)
PB4 (MISO)
PB5 (SCK)
EN_A
EN_B
C1
DP1
E2
D2
G2
C2
DP2
D1
E1
B2
A2
F2
B1
A1
EN_SW
OUT_L
MOSI
MISO
SCK
C7
100nF
ATmega8-AU/MU
Programming connector
P8
MOSI
MISO
SCK
RST
Header 6 2mm
16x 180R
R6-R21
DIS1
OPD-D5630LR-BW
CA1
CA2
Level converter
R23
10K
Q2
2N7002
Title
Size
A4
Number
Revision
Date:
2018-03-31
Sheet of
File:
C:\Users\..\timer.SchDoc
Drawn By:

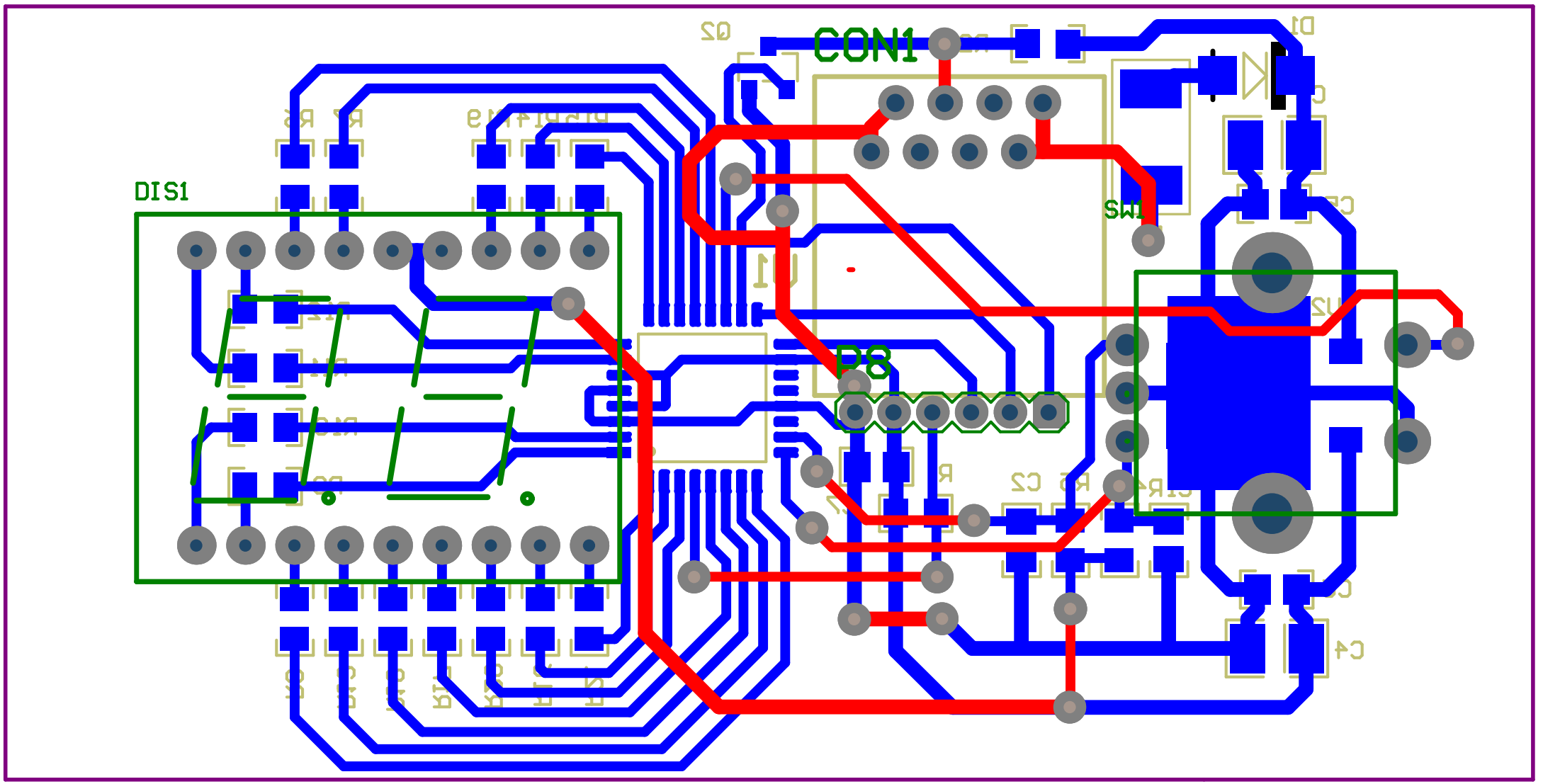
CON1
DIS1
P8
SW1