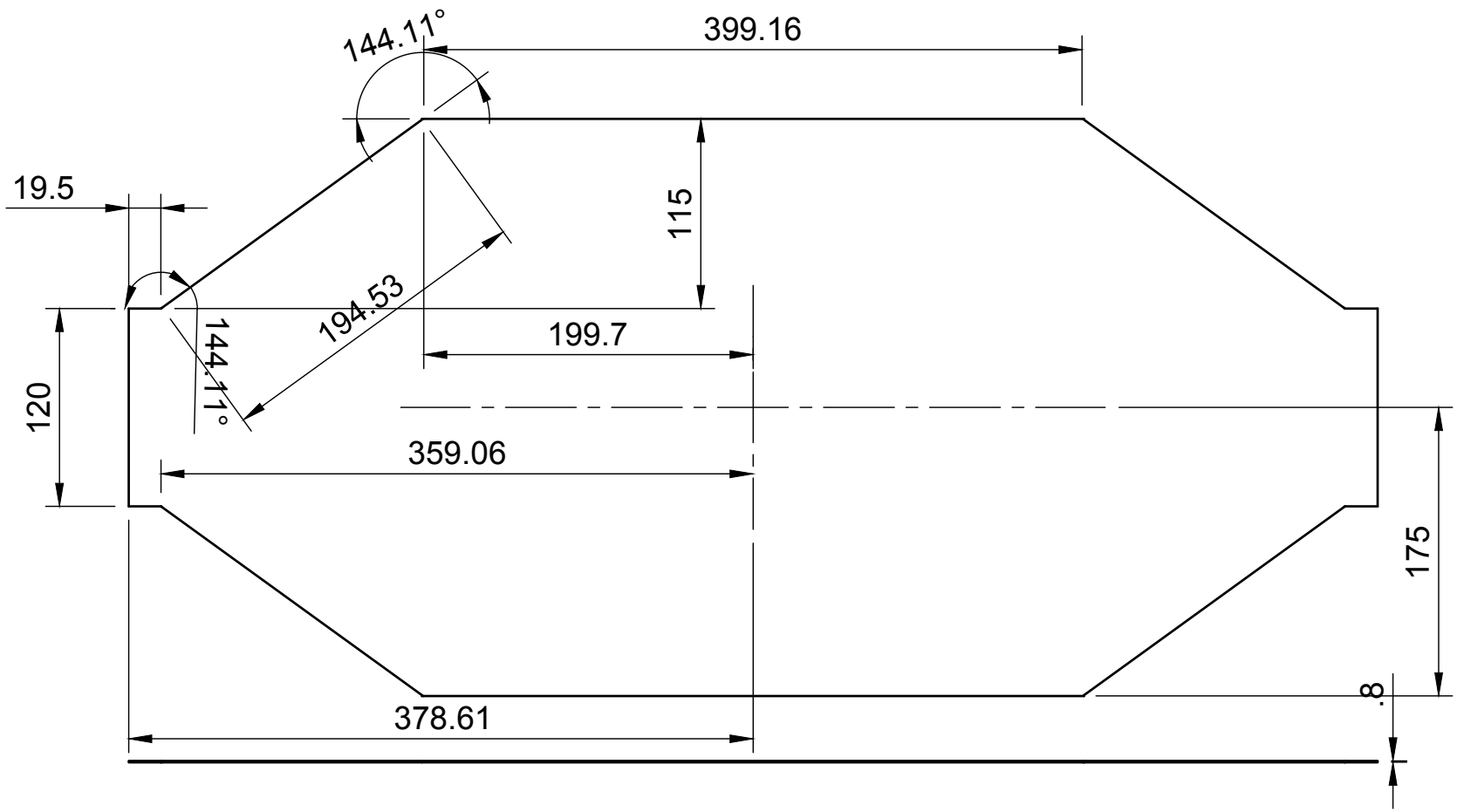

Dept.	Technical reference	Created by Łukasz Nowarkiewicz 25/02/2023	Approved by	
		Document type	Document status	
		Title Linia TEM rev.3.0 bok rozwiniety	DWG No.	
			Rev. / Date of issue	Sheet 1/1