PCB Design and Fabrication

Luke Eggert

2/4/26

Table of Contents:

1: Introduction

2: Design Stage

3: Prototype Stage

4: PCB Design Stage

5: Assembly Stage

6: Repository

7: References.

1: Introduction:

The goal of this project is to design and implement a DSP shield with a screen and DAC capabilities. This DSP shield was focused on applying embedded system concepts such as interrupts, timers, Analog and Digital signal processing, and communication protocols. This project was intended to demonstrate practical hardware and software integration using an Arduino Uno shield design.

2: Design Stage:

We designed a PCB shield using the following features:

IMU

Display

10 bit DAC

2 Buttons

3 Potentiometers

Analog Inputs

The microcontroller is the central unit, the inputs feed into the microcontroller, the DAC outputs the final signal, and the buttons and potentiometers control the behavior of the system. A 10 but R-2R DAC was added to convert digital signals into an analog output, and an op amp was used to buffer and scale output voltage.

Block Diagram:

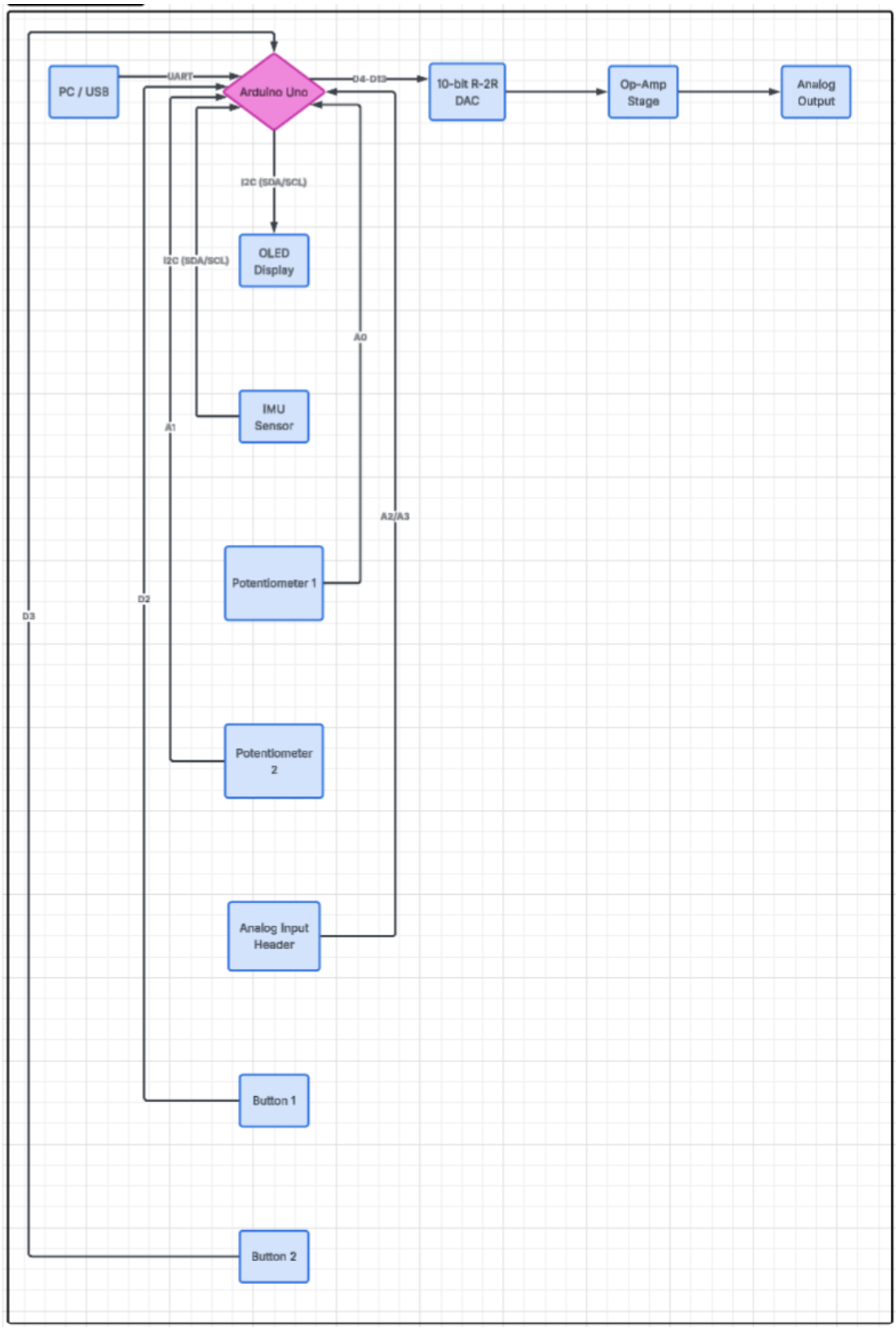

3: Prototype Stage

Before building and fabricating our PCB, we tested the DAC on a simulation software as well as on a breadboard.

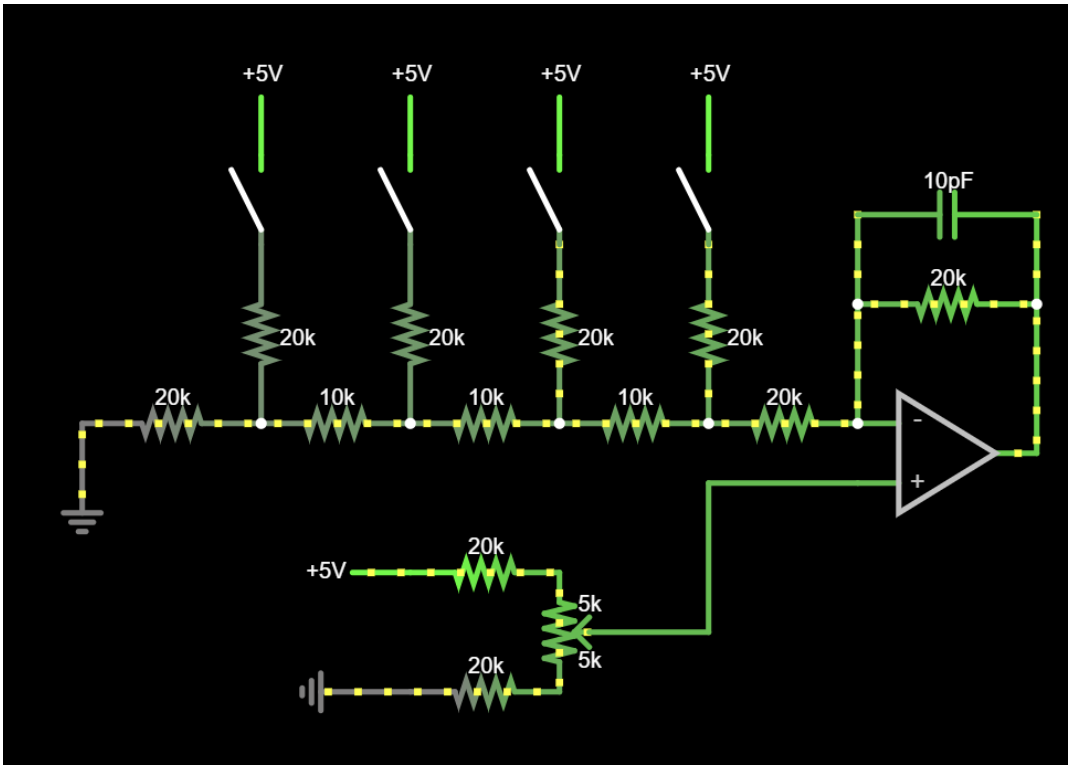

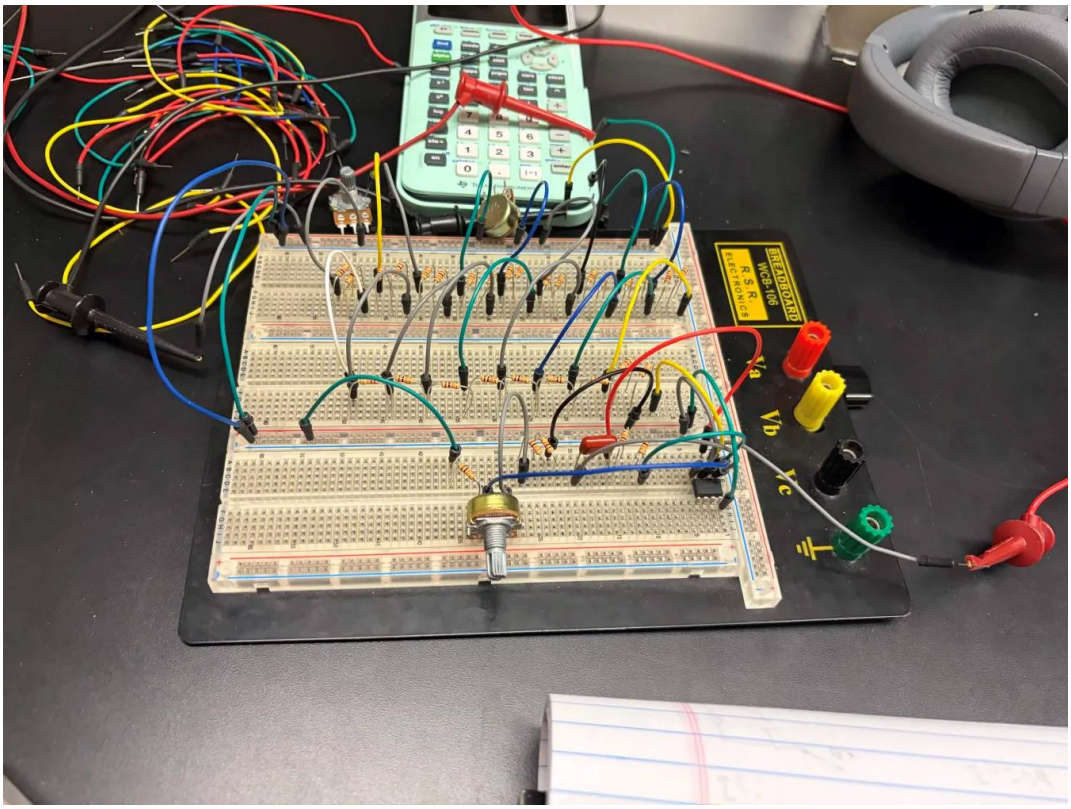

PCB Design Stage:

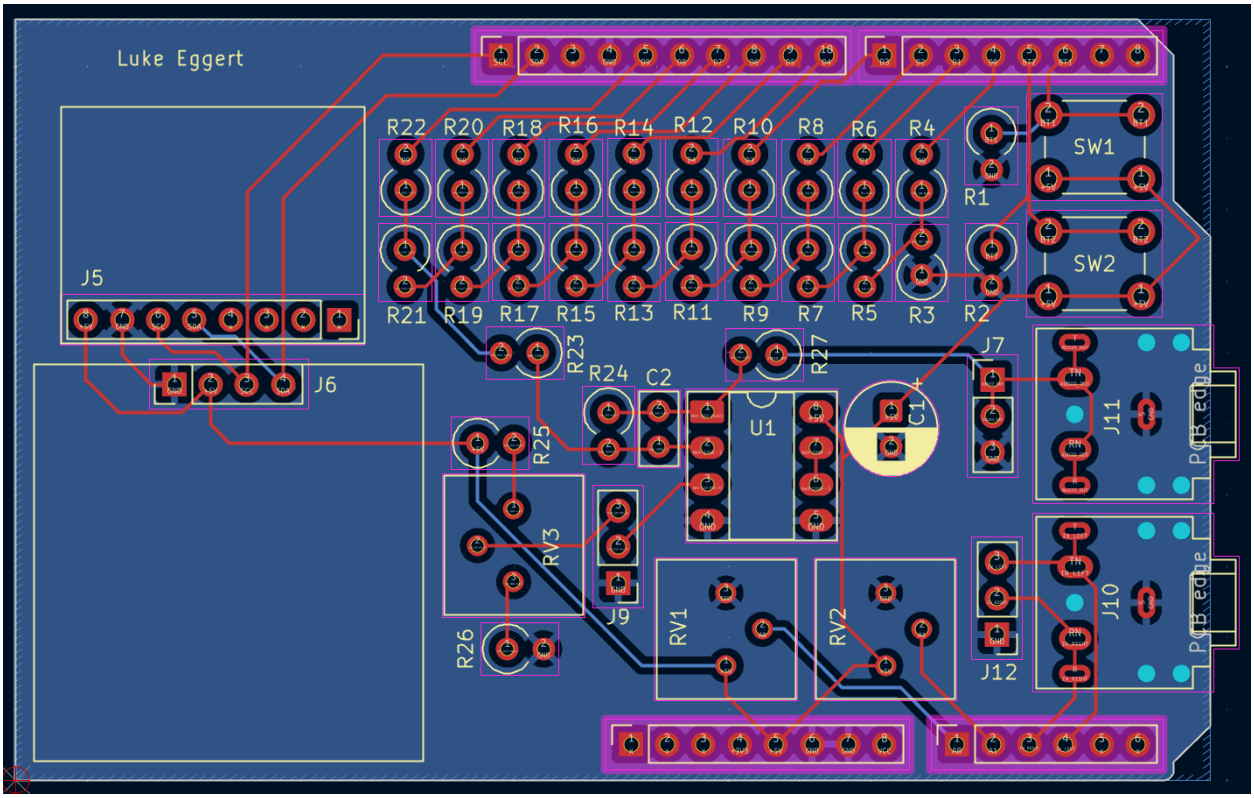
Luke Eggert
R22 R20 R18 R16 R14 R12 R10 R8 R6 R4
R21 R19 R17 R15 R13 R11 R9 R7 R5 R3 R2
R1
SW1
SW2
J5
J6
R23
R24
C2
R27
J7
U1
C1
R25
J11
PCB edge
RV3
J9
RV1
RV2
J10
R26
J12

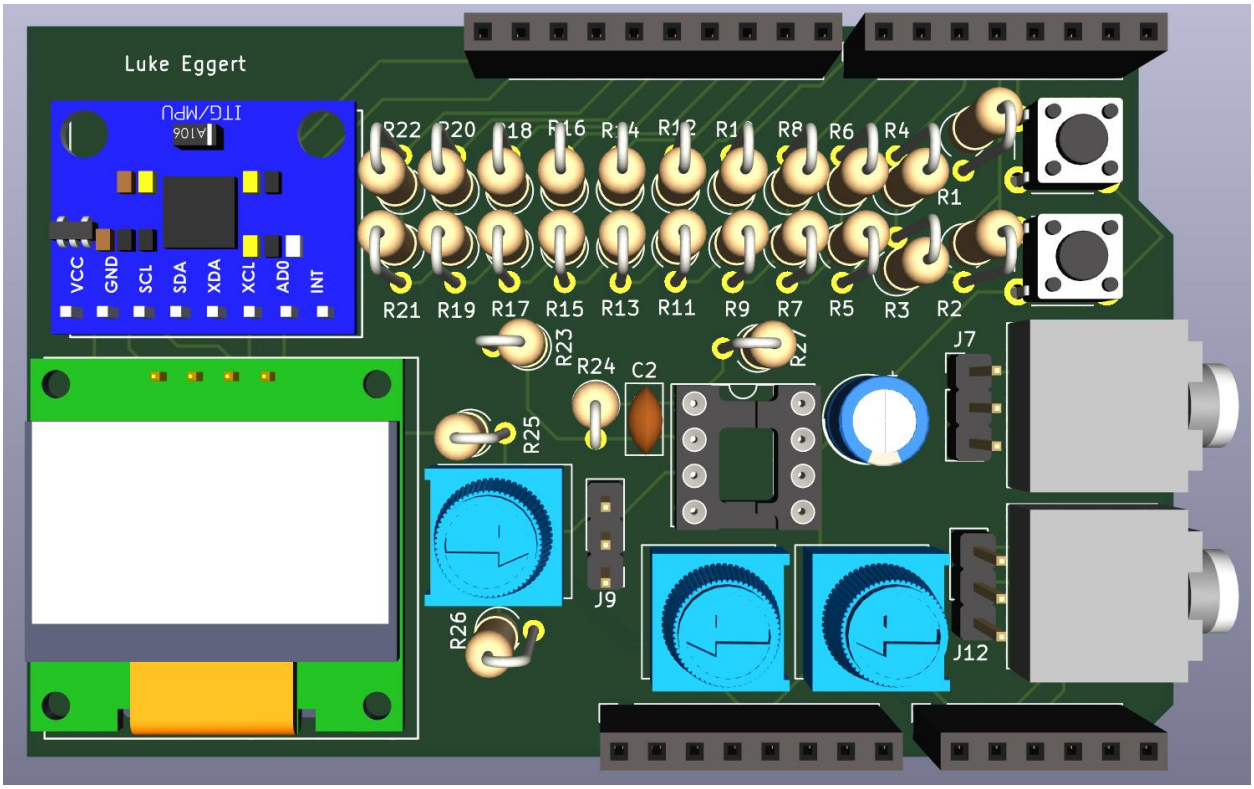
Luke Eggert
ITG/MPU
A106
VCC GND SCL SDA XDA XCL AD0 INT
R22 R20 R18 R16 R14 R12 R10 R8 R6 R4
R21 R19 R17 R15 R13 R11 R9 R7 R5 R3 R2
R1
R23
R24
C2
R27
J7
R25
J9
R26
J12

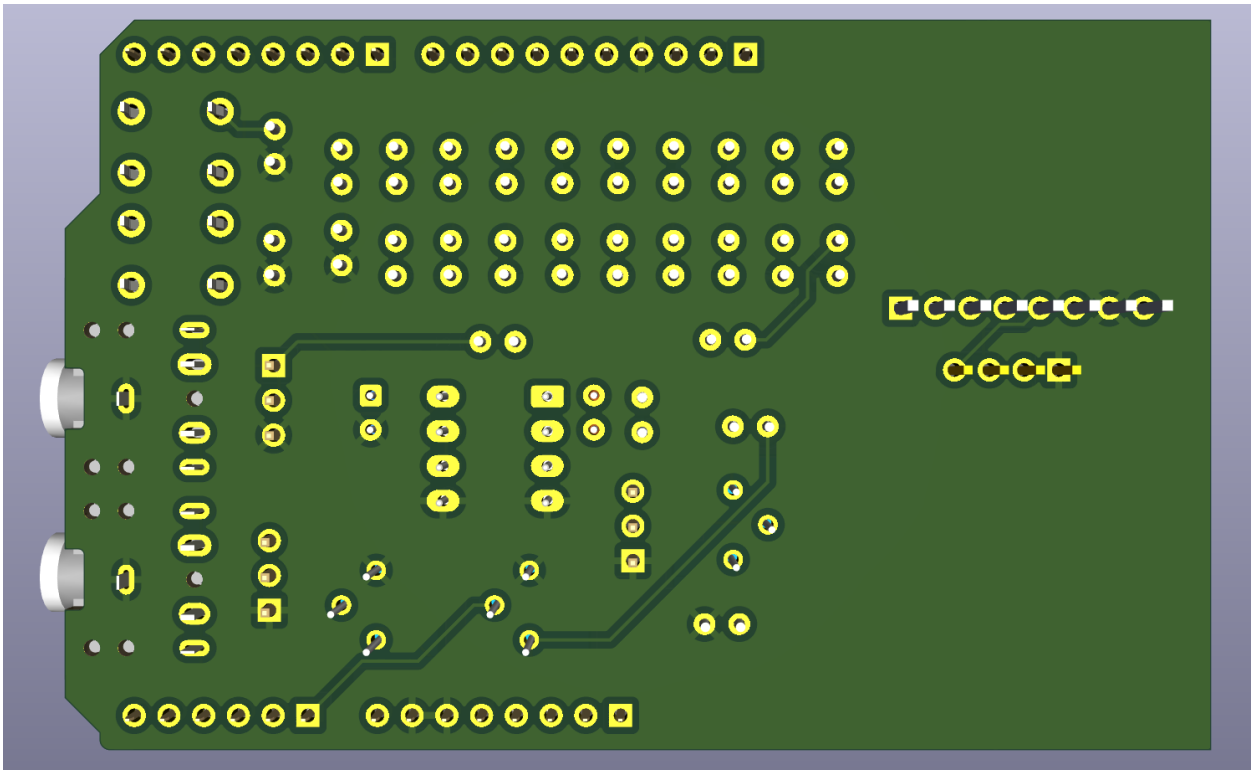

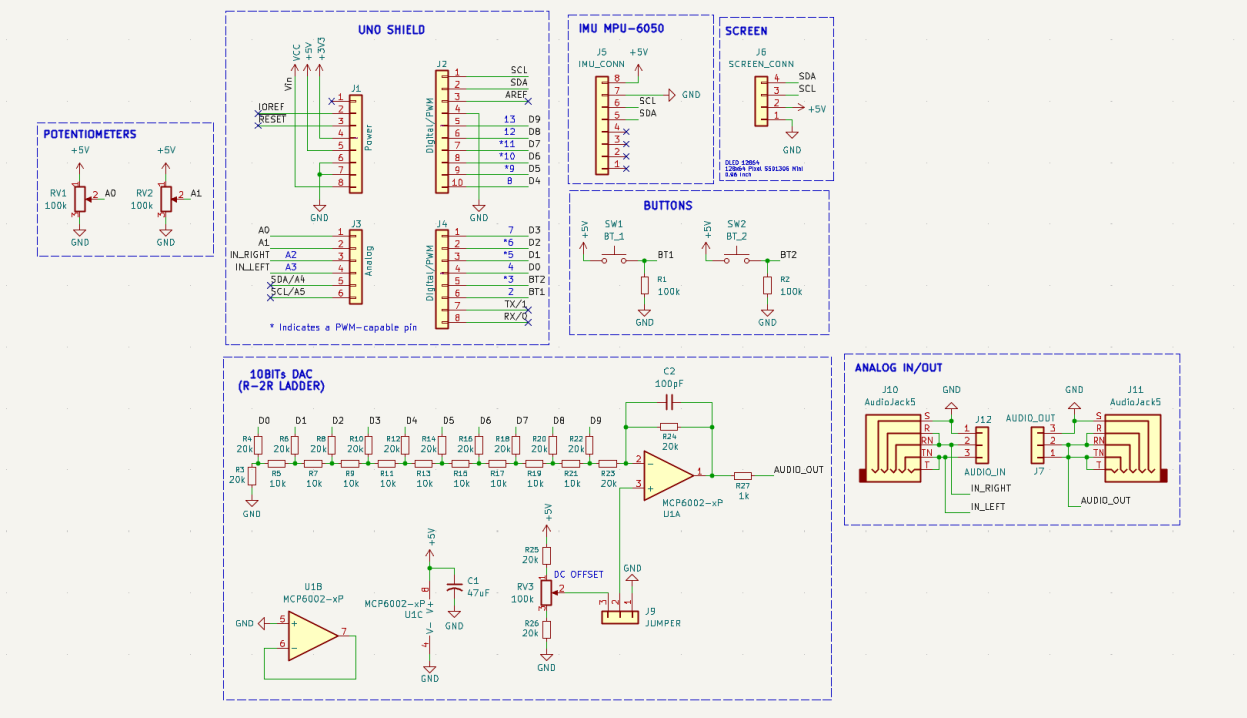
UNO SHIELD
POTENTIOMETERS
IMU MPU-6050
SCREEN
BUTTONS
10BITs DAC
(R-2R LADDER)
ANALOG IN/OUT
* Indicates a PWM-capable pin
MCP6002-xP
AUDIO_OUT
DC OFFSET

5: Assembly Stage:

Boards were fabricated using PCBWay and shipped. I then soldered the components to the board.

6: Repository:

https://github.com/lukecclimbing2/ENCE3210_Luke_2026/tree/main/documentation_B/Uno_Shield_DSP_Class_v1

7: References:

ENGR Edu for project instructions