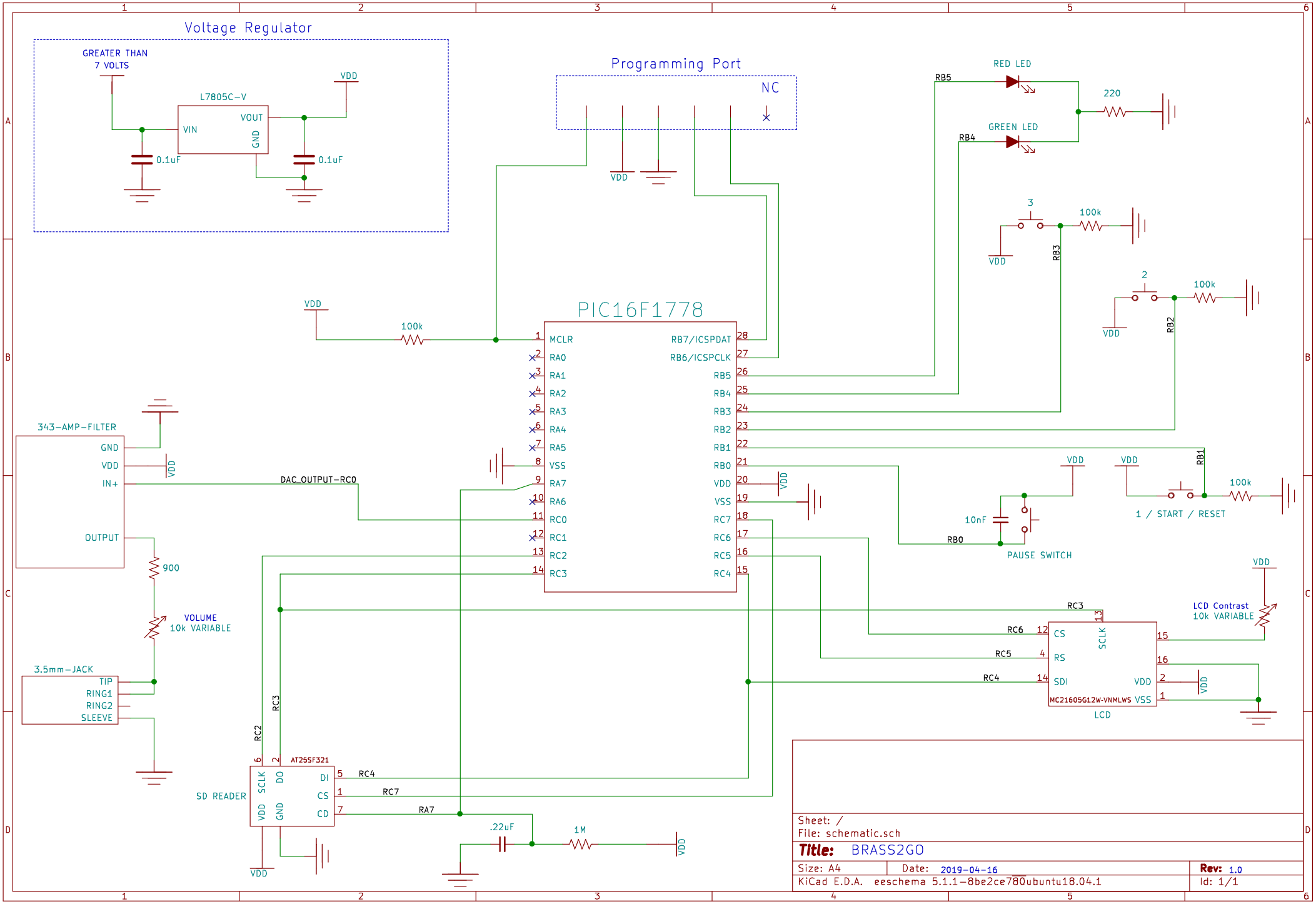
Voltage Regulator
GREATER THAN
7 VOLTS
L7805C-V
VIN
VOUT
GND
VDD
0.1uF
0.1uF
Programming Port
NC
VDD
RED LED
GREEN LED
RB5
RB4
220
3
100k
RB3
2
100k
RB2
PIC16F1778
MCLR
RA0
RA1
RA2
RA3
RA4
RA5
VSS
RA7
RA6
RC0
RC1
RC2
RC3
RB7/ICSPDAT
RB6/ICSPCLK
RB5
RB4
RB3
RB2
RB1
RB0
VDD
VSS
RC7
RC6
RC5
RC4
100k
343-AMP-FILTER
GND
VDD
IN+
OUTPUT
DAC_OUTPUT-RC0
900
VOLUME
10k VARIABLE
3.5mm-JACK
TIP
RING1
RING2
SLEEVE
10nF
PAUSE SWITCH
RB0
RB1
100k
1 / START / RESET
LCD Contrast
10k VARIABLE
RC3
RC6
RC5
RC4
CS
RS
SDI
SCLK
VDD
VSS
MC21605G12W-VNMLWS
LCD
RC2
RC3
AT25SF321
SD READER
SCLK
DO
VDD
GND
DI
CS
CD
RC4
RC7
RA7
.22uF
1M
Sheet: /
File: schematic.sch
Title: BRASS2GO
Size: A4
Date: 2019-04-16
Rev: 1.0
KiCad E.D.A. eeschema 5.1.1-8be2ce780ubuntu18.04.1
Id: 1/1