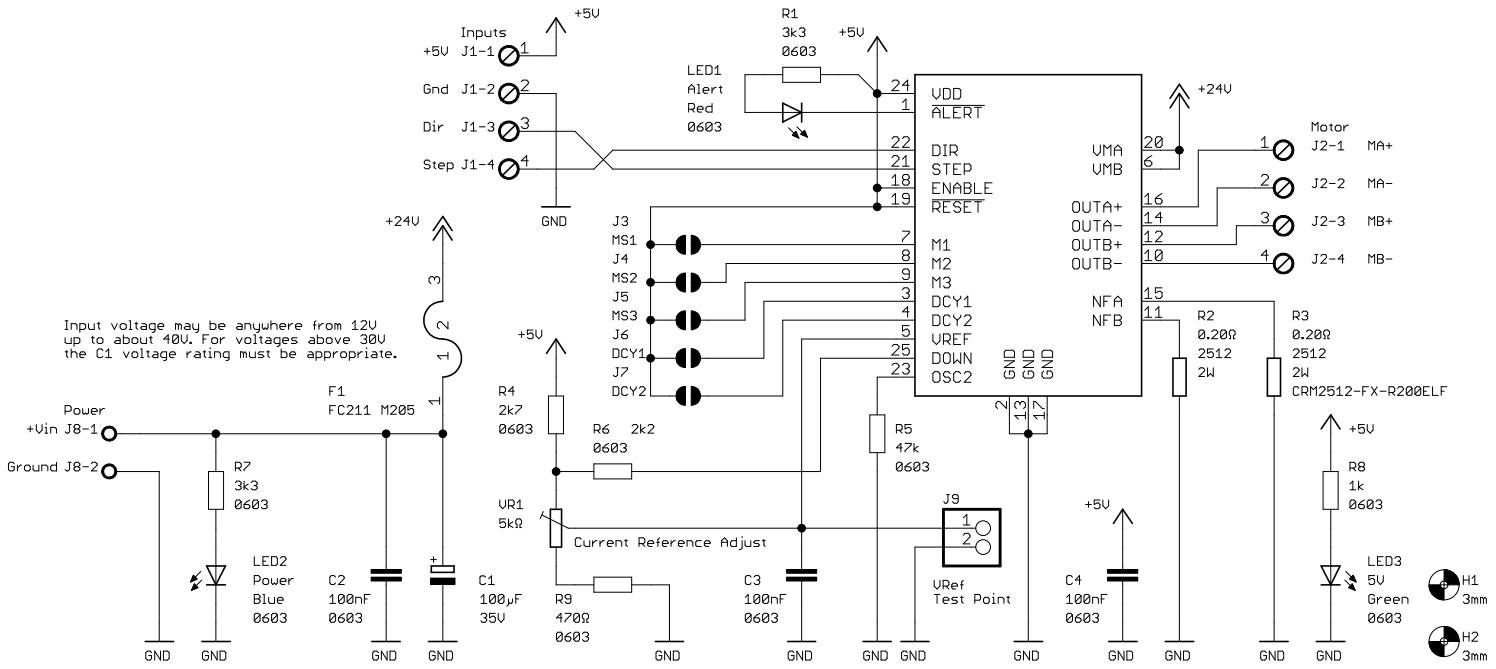

THB6064 Stepper Driver Breakout

V0.5 (02/06/2012) github.com/lukeweston/THB6064

(C) 2012 Luke Weston
Released under the CERN Open Hardware License: www.ohwr.org/cernohl