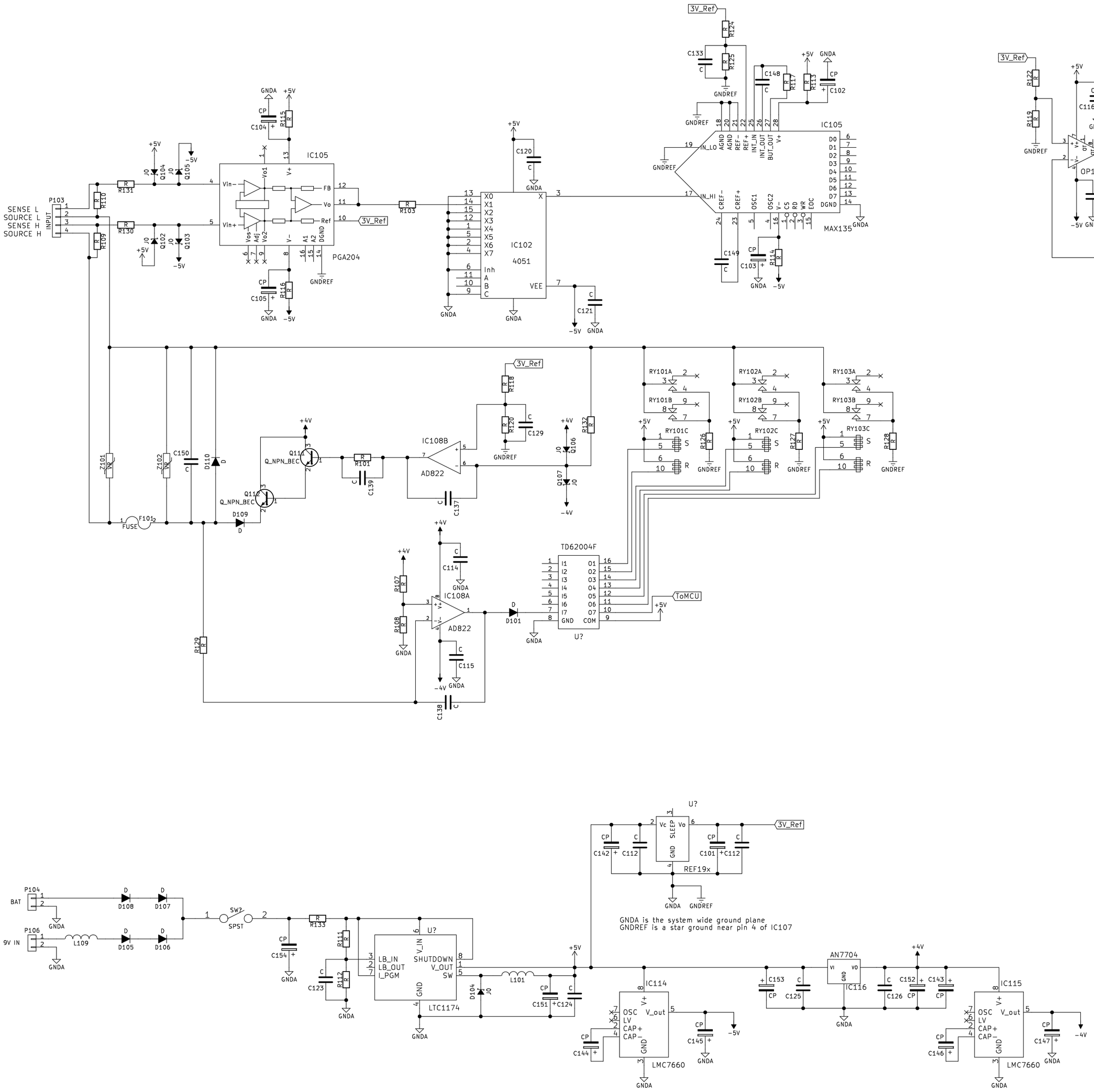

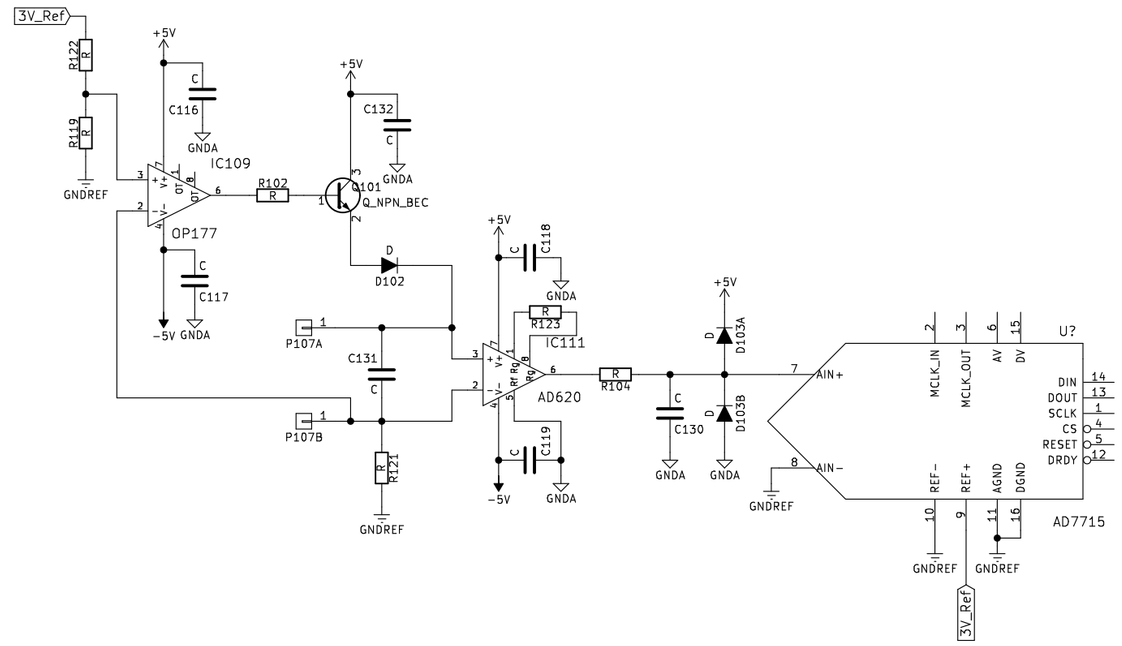

Sheet: /
File: Hioki3540.sch

Title:

Size: A2	Date:	Rev:
KiCad E.D.A. kicad (2015-10-03 BZR 6242)-product		Id: 1/1