Achim Menges

Morphospaces of Robotic Fabrication

From theoretical morphology to design computation and digital fabrication in architecture

Abstract The research presented in this paper investigates the possible transfer of the concept of morphospaces from theoretical morphology in biology to the realm of robotic fabrication and design computation in architecture. This investigation is concerned with the search for suitable methods of differentiating between the geometrically possible and robotically fabricable in integrative computational design processes, a critical component for further developing a morphogenetic approach to design. In the first, second and third part of the paper, the relevant aspects of morphogenetic design in architecture, theoretical morphology in biology and the related distinction between empirical and theoretical morphospaces are introduced. In the fourth and fifth part, the transfer of the concept of theoretical morphospaces from biology to design computation and robotic fabrication is introduced and explained along with the research on constructing machinic morphospaces for robotic production for robotically fabricated plate structures with finger joint connections.

Keywords: robotic fabrication, machinic morphospaces, computational design, digital morphogenesis, theoretical morphology

S. Brell-Çokcan et al. (eds.), *Rob | Arch 2012*
© Springer-Verlag/Wien 2013

Introduction

Over the last two decades the logics and economics of serial production in the industrial prefabrication of building elements has eroded rapidly in the face of an increasing availability of computer-aided manufacturing and digital fabrication processes in the building sector. Whereas in industrial prefabrication the product was the one and singular outcome of a specific automated machine, the first wave of digital fabrication in architecture based on the introduction of computer-numeric control of long-established analogue machines (CNC mills, CNC saws, CNC joinery machines, etc.) led to a first significant increase of variability in production processes.

The second wave of digital fabrication currently underway entails a transition from job-specific computer controlled machinery to more generic production robots. This generic character of the basic robotic hardware – that only becomes specific when equipped with a particular effector and tool – enables the design of new fabrication processes prior or in parallel to a specific project, and thus potentially challenges the conventional hierarchy and sequences still predominant in design and fabrication in today's architectural practice. The research presented in this paper forms part of a larger research undertaking that investigates possible convergences of computational form generation and computer-aided materialisation in architecture through integrative design computation: an approach that has been termed morphogenetic design (Hensel, Menges et al. 2004 / Hensel, Menges et al 2006).

1 Morphogenetic Design

Contemporary architectural design is still characterised by a clear separation and hierarchical conception of the creation of form, space and structure and its subsequent preparation for materialisation. In contrast the approach presented here seeks to employ computational processes for a higher level of integration of form generation and materialisation (Menges 2011). Analogous to the processes of becoming that derive the complex organisation, versatile structure and articulated shape of natural systems, here the genesis of form is conceptualized as the interaction between system intrinsic materialisation capacities and constraints as well as system external influences and pressures. Exploring the space of the physically producible, this design process enables novel modes of architectural inquiry, functional integration, performative capacity and material resourcefulness.

A more detailed investigation of morphogenetic design computation has been discussed in various other contexts, including [i] the transfer of morphogenetic and evolutionary concepts by process biomimetics (Menges 2012), [ii] its relation to parametric design (Menges 2005), [iii] the relation between computational form and material gestalt (Menges 2008), [iv] the integration of material behavior (Fleischmann et al 2012), [v] the integrative characteristics of the developed design processes (Menges 2006), [vi] the underlying conception of performativity (Hensel and Menges 2008), [vii] the related multidisciplinary design approach (Fleischmann and Menges 2011) and [viii] various specific

research project examples (Menges 2010 / Menges et al 2011). This paper will present the research on transferring another methodology from the realm of biology to morphogenetic computational design with a particular focus on robotic manufacturing. Here the main focus is on developing a robust method for describing the morphological variance of building elements together with the machine constraints of their robotic fabrication within one system, so that a non-hierarchical, direct feedback between key parameters of the computational form generation and materialisation can be established.

Thus, the paper will first introduce the notion of theoretical morphology in biology as a systematic approach of describing not-yet-existing form, and relate this to the definition of formal, multidimensional spaces based on morphological parameters, so called morphospaces, which can be adapted to serve as mathematical constructs to explore the space of the geometrically possible and physically producible.

2 Theoretical Morphology in Biology

Theoretical morphology comprises an important part of the discipline of morphology in biology. In contrast to empirical morphological studies it is concerned with the range of forms that biological entities could theoretically take (McGhee 1999). In biology it aims tor investigate why certain natural forms exist but others have not developed, with the ultimate goal of a better understanding of evolution. For this research the concept of theoretical morphology is of particular interest due to two reasons: First, it provides a methodological framework that allows for the transition from an analytic approach to morphology to a generative one, including the possibility of computing conceivable morphologies. Second, it allows the establishment of a distinction between empirical and theoretical morphospaces, which constitutes a critical part of the research on integrating morphogenetic design and robotic fabrication.

In the late 18th century Johann Wolfgang von Goethe invented the notion of morphology, stating that "morphol-

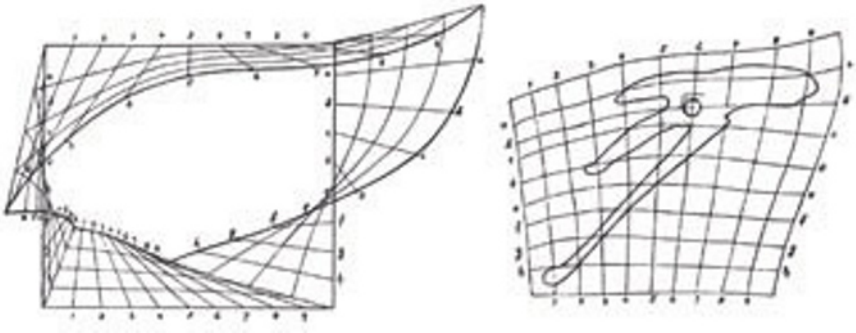

Figure 1a Based on the coordinate systems of the pelvis of Archaeopteryx and the pelvis of Apatornis D'Arcy Thompson derived three intermediate systems as an interpolation (left), which allows a corresponding inscribed pelvis to be generated (right). Source: D'Arcy Thompson (1947). Reproduced with permission of Cambridge University Press.

ogy may be said to include the principles of structured form and the formation and transformation of organic bodies" (Miller 1995). His work provides a profound first contribution to theoretical morphology, in particular his approach to generalizing the combinatorial logic of plant organs and animal bones. These investigations were strongly based on the understanding that morphological diversity develops within the constrictions of specific structures and that the infinity of possible forms is limited in natural variation. For the research presented here a critical moment in the development of early theoretical morphology occurs in D'Arcy Thompson's work. Thompson is generally regarded as a significant contributor to laying the conceptual foundations for contemporary computational design (Weinstock 2004), especially in terms of parametrics and the logics of associative geometry. One particularly relevant side to Thompson's work is the progression of his mathematical concept of biological form and transformation from a merely analytical mode of mapping existing form to one that suggests how his mathematical operations can become generative (Ahlquist and Menges 2011). The research described in his "Theory of Transformation" on educing an undiscovered, intermediate pelvic structure between the Jurassic bird Archaeopteryx and the Cretaceous bird Apatornis marks the point of transition from reconstructing known forms to generating unknown forms with mathematical methods (Thompson 1961) (Fig. 1a). It is interesting to note that Thompson's method has subsequently been adapted and tested in computational approaches (Rasskin-Gutman and Buscalioni 2001) (Fig. 1b). The underlying conceptual framework established by theses early researches is still considered to be of relevance and significant influence for con-

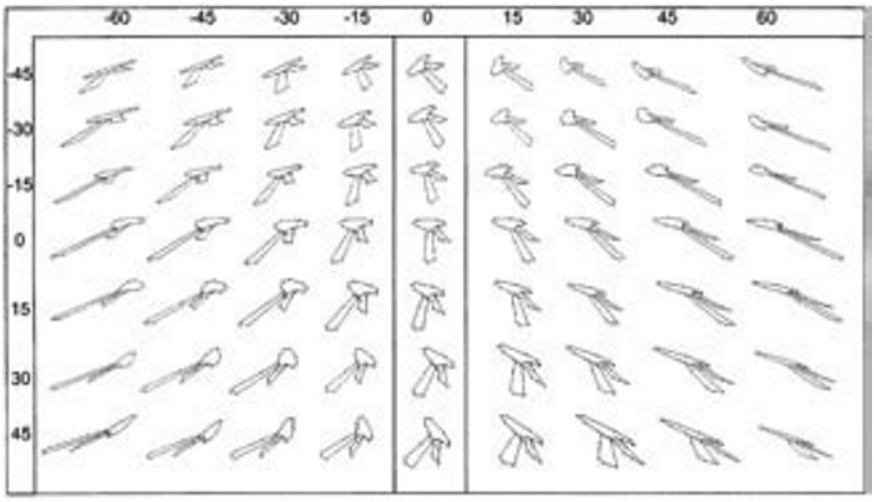

Figure 1b The affine morphospace of the hip outline of the theropod dinosaur Deinioniychus antirrhopus generated by the computer program D'ARCYGRAPH. Source: Rasskin-Gutman, D. and Buscalioni, A. (2001). Reproduced with permission of the Paleontological Society.

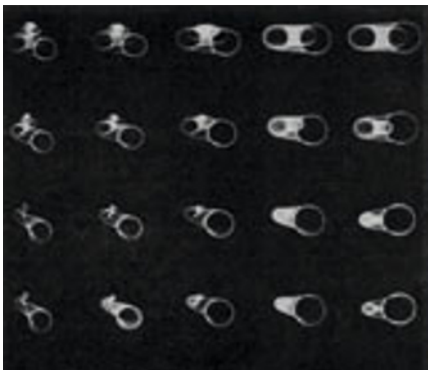

Figure 2a Oscilloscope photographs show the coiling geometries generated by an analog computer. Source: Raup, D. M. and Michelson, A. (1965). Reproduced with permission of Science.

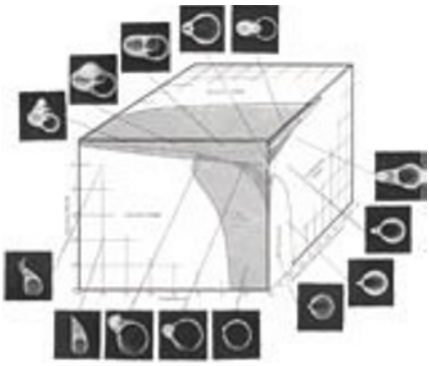

Figure 2b The morphospace of coiled shells is constructed based on three parameters. It shows the difference between the empirical morphospace of existing taxa (grey regions) and the theoretical morphospace (white regions). Source: Raup, D.M. (1966). Reproduced with permission of SEPM Society for Sedimentary Geology.

temporary theoretical morphology (Eble 1999). However Mendelism and Darwinism shifted the attention to other theories in biology. Further progress into modern theoretical morphology only occurred after the modern evolutionary synthesis and the rise of computational methods in the second half of the 20th century. Another critical moment for the research presented here is David Raup's seminal work on pioneering the use of computers for developing the theoretical morphology of coiled shells in the 1960s. Employing both digital computers (IBM 7094 with an Calcomp X-Y plotter) and analog computers (PACE TR-10 with an oscilloscope) he generated an entire spectrum of possible shell forms (Raup 1965) (Fig. 2a).

3 Theoretical Morphospaces and Empirical Morphospaces in Biology

In addition to the mathematical simulation of form, Raup's work also exemplifies the second critical component of theoretical morphology: the construction of morphospaces where the possible and the actual can be mapped and compared (Eble 1999). In order to introduce the relevant distinction between these two kinds of morphospaces the general concept needs to be explained: In evolutionary and developmental biology morphological spaces, or, in short, morphospaces, constitute formal spaces defined by multiple dimensions each corresponding with a variable parameter of morphology. They serve as computational and conceptual tools that allow for describing and relating the vast variance of organismal form in living nature (Mitteroecker and Huttegger 2009). A good example is the above mentioned morphospace of coiled shells developed by Raup (Fig. 2b). The selection of three parameters of the computational generation of shell morphologies defines the three axes of this morphospace: [i] the distance between the cross section and the

coiling axes, [ii] the rate of translation of the cross section along the axis per revolution and [iii] the rate of size increase of the shell per revolution (Raup 1966). Another critical aspect exemplified by Raup's morphospace is the distinction between two regions: the parts where existing taxa can be mapped into this space – the empirical morphospace (marked grey in Fig. 2b) – and the entirety of the space – the theoretical morphospace – of which large regions remain empty (the white regions in Fig. 2b).

In morphospace studies the difference between empirical and theoretical descriptions plays a central role. Whereas empirical morphospaces are representations of what has actually come into existence in nature (McGhee 1991), theoretical morphospaces are based on mathematical parameters and represent what could be possible. With their dimensions being "geometric or mathematical abstractions of form" (McGhee 1991), theoretical morphospaces have the "ability to specify nonexistent form" (McGhee 1991). This characteristic suggests a potential overlap between the concept of morphospaces in biology and morphogenetic design computation.

4 Morphospace Concept: Transfer to Computational Design and Robotic Fabrication

In computational design the generation of form is based on algorithmic processes that operate within specific variable ranges of selected parameters. Thus the design of the generative process always precedes the design of a specific result, and the designer's focus extends beyond shape, space and structure towards the underlying generative system (Ahlquist and Menges 2011). The variance range of each parameter of this underlying system can be conceptualized as delineating a multidimensional space very similar to the morphospaces of theoretical morphology in biology. In this way, the capacity of a generative computational design system to derive "nonexistent form" can be directly related to the constraints of machinic processes of actualizing specific shape.

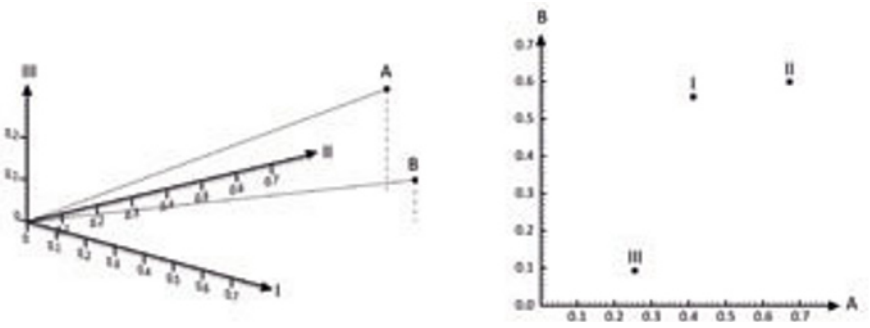

Figure 3 Data for p parameters in n cases can be represented in R-spaces and Q-spaces. Whereas the R-space is spanned, for example, by the three cases I,II and III and the parameter values A and B are two points in this space (left), the three cases are single points in a Q-space defined by the parameter ranges of A and B. Based on: Mitteroecker and Huttegger (2009).

The transfer of concepts from theoretical morphology in biology to morphogenetic design and robotic fabrication in architecture may be of profound relevance, as it allows the representation of the variable parameter range of both form generation and materialisation in one morphospace. This provides a critical methodological step for overcoming the inherent hierarchy of established design processes – including most digital ones – that prioritize the definition of form over its subsequent physical realisation. The concurrent mapping of both [i] the theoretical morphological variance of p shape parameters and [ii] the specific region of manufacturability based on the specific constraints and affordances of a robotic fabrication processes within the resulting space for n possible morphological actualisations lays the foundation for a systematic investigation of a non-hierachical convergence of computational design and digital fabrication.

4.1 Q-space and R-space in Multivariate Statistics

To represent data for p parameters in n cases two different kinds of formal spaces are employed in multivariate statistics (Mardia et al. 1979): [i] the first kind is the n-dimensional R-space (Fig. 3 left), in which variables are represented by p points. In biological theoretical morphology phenomena like morphological integration and modularity are investigated in R-space, as in this space the correspondence between variables can be calculated as the cosine of the angle given by the two vectors that connects the origin with the related points (Mitteroecker and Bookstein 2007). [ii] The second, more common kind is the so called Q-space (Fig. 3 right), which is the p-dimensional space spanned by the variables. In this space each morphological instance is represented by a single point. Thus morphological similarities and dissimilarities among instances are indicated by decreasing or increasing distances between points. If the Q-space has a Euclidian structure these distances can be computed as the Euclidian distance between Cartesian coordinates of an underlying Euclidian vector space. On the one hand, Euclidian vector space has the advantage that it allows various geometric and algebraic operations, as the vector space underlying Euclidian geometry determines its algebraic structure. Based on a fully defined notion of addition and scalar multiplication, morphological instances can be generated through different transformations and a morphological instance situated between two other morphologies can be generated. On the other hand, the stringent properties and relations characterising Euclidian morphospaces have the disadvantage that they considerably limit the range of variables that can be investigated. Very often in both biology and the architectural research presented here, precisely formalizing parameters results in morphospaces that are "weaker" than Euclidian space. Whereas modern morphometrics regularly employs more abstract spaces based on, for example, Riemannian geometry, "traditional" multivariate morphometrics can also be adapted to handle a wider range of parameters. This is of particular relevance when comparing morphological features expressed through incommensurate units within one morphospace.

4.2 Affine Q-spaces for Incommensurate Parameter Units

Raup's "classical" morphospace of coiled shells can again serve as an interesting example. His parameters cannot be accommodated by a strictly Euclidian structure. While only two of his parameters are at least of the same unit, they are still employed to serve profoundly different purposes in the geometric model and they lack a "natural" scalar relation (Mitteroecker and Huttegger 2009). Nevertheless, they still result in a meaningful morphospace. This example shows how a vector space can be constituted by axes that do not rely on possessing commensurate units. Thus the representation of different parameters such as, for example, volumes, distances and angles, which do not share a common scale, is possible. A space defined by such variables is not a Euclidian space but an affine space. This is the space underlying affine geometry, which is characterised by remaining unchanged when undergoing affine transformations. Geometric properties that are invariantly relative to affine transformations include for example collinearity, incidence relationships and barycentric combinations. The awareness of the variance and invariance of geometric properties is of critical importance for the correct understanding and transfer of such morphospaces to the realm of morphogenetic design and robotic fabrication.

4.3 Machinic Morphospaces and Robotic Production

Manufacturing and fabrication – or more precisely the constraints and affordances of these processes – play an important role in morphogenetic computational design. This aspect of manufacturing-informed design computation requires the development of appropriate design methods capable of navigating the narrow path between under-determining manufacturing specificity, which leads to a lack of rigor and consequently operativeness, and over-constraining machine limits, geometric properties and boundary conditions resulting in premature convergence and lack of exploratory potential. The transfer of the concept of morphospaces from biology to computational design offers the possibility to develop a robust methodological framework for the concurrent mapping of the morphological variability and production constraints of building elements. While other, more recent morphospace – as for example the Kendall Shape space – do exist, this transfer will be explained in the next paragraphs through a project specific, affine Q-space based on the variable range of three parameters derived from robotic fabrication.

5 Constructing a Machinic Morphospace: Example of Robotically Fabricated Polygonal Plywood Plates with Finger Joints

The concept of machinic morphospaces has been investigated in the context of researching robotic prefabrication processes for polygonal plywood plate structures. This research originated from the recognition that robotic fabrication has the potential to extend traditional wood jointing techniques. Finger joints are of particular interest, as they allow for embedding the joint in the actual plates with no need for any ad-

ditional mechanical or adhesive elements, creating a mono-material form- and force-fitting connection that further enhances the excellent ecological performance of wood structures with regard to a very low level of embodied energy (Alcorn 1996) and positive carbon footprint (Kolb 2008). In traditional industrial processes of fabricating finger joints the set-up of the respective machine limits the possible wood plate connection to one angle and one set of plate thicknesses. In contrast, the robotic fabrication process developed as part of this research project enables the cutting of finger joints for a wide range of connection angles (Fig. 4a) and even differing plate thicknesses. These polygonal plywood plates with robotically fabricated finger joints provided the starting point for the development of a lightweight wood construction system (Fig. 4b). As the resulting wood plate structure consist entirely only of these polygonal plates, the mapping of their possible morphological variance in relation to the specific fabrication set-up presents a critical facet for the ensuing computational design process. To construct a morphospace of plate morphologies a structure similar to the one investigated in theoretical morphology in biology can be developed.

Figure 4a The robotic fabrication of finger joints allows the connection of plywood plates at variable angles without the need for any additional mechanical elements.

5.1 Definition of Building Element Morphology Parameters

At the onset, the construction of the morphospace requires determining the relevant morphological parameters that comprehensively describe the theoretical morphological variance across a large number of possible plate instances (Fig. 5). The following parameters were identified for the plate

morphology: [i] the size of the plate is expressed as the radius of the circle around the polygon centroid through the polygonal vertices. This parameter is called polygon radius and measured in millimetres. The initial parameter range comprises 0 to 1100mm, approximately half the distance between the axis 1 and the axis 7 of the robotic set-up. [ii] The connection angle α between plates is expressed in degrees and can theoretically vary between -180° and +180°, with the range between -180° and 0° representing concave plate connections and the range between 0° and +180° representing convex plate connections. [iii] The shape of the polygon is expressed through

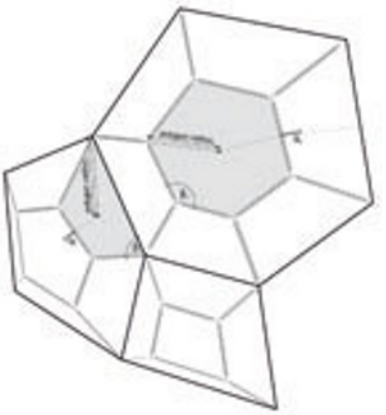

Figure 5 The three relevant parameters of the plate morphology are the polygon radius, the connection angle α, the polygon angle β.

Figure 4b The development of a lightweight system of wood plate structures is based on the morphological variance of the finger joint plates enabled by robotic fabrication.

the angle between the polygon edges. The related parameter, termed polygon angle β, is expressed in degrees and can theoretically vary between -180° and +180°, with the range between -180° and 0° representing concave polygon segments and the range between 0° and +180° representing convex polygon segment. In the case of the research project described here the range of polygons was limited to four- to seven-sided polygons and the parameter of the plate thickness was set to be constant at 6.5 mm in order to demonstrate the system's lightweight potential.

5.2 Definition of Robot Fabrication Set-up

The delineation of the morphospace's region that separates the producible from the geometrically possible is highly set-up specific. In addition to understanding the possible working positions that the TCP (tool centre point) can reach, other constraints of the specific robot kinematic, which comprises the interaction between motors and internal sensors, need to be taken into account, as for example the limited rotation around the A6 axis of various robot types caused by the effector's power and air supply pipes. In the case of this research project the robot set-up for fabricating the finger-jointed plywood plates (Fig. 6) consist of: [i] KUKA KR125/2 robot with a distance of 1210mm between the A3 and A6 axes, [ii] KUKA KPF1-V500V1 turntable as A7 axis, on which the stock piece is mounted, with a distance of 2225mm between the A1 and A7 axes, [iii] HSD ES 350 spindle unit and [iv] Leitz 20/120 Z4 milling tool, which was custom-made by one of the project's industrial partners and used for all fabrication processes. Any change in this set-up will have an effect on the related morphospace.

5.3 Identification of Set-up Specific Fabrication Constraints

A critical step in the morphospace's definition is identifying the robot set-up's specific fabrication constraints and relating them to the morphological parameters of the plates to be fabricated. The connection angle α between plates is defined through the normal vector No of the stock piece to

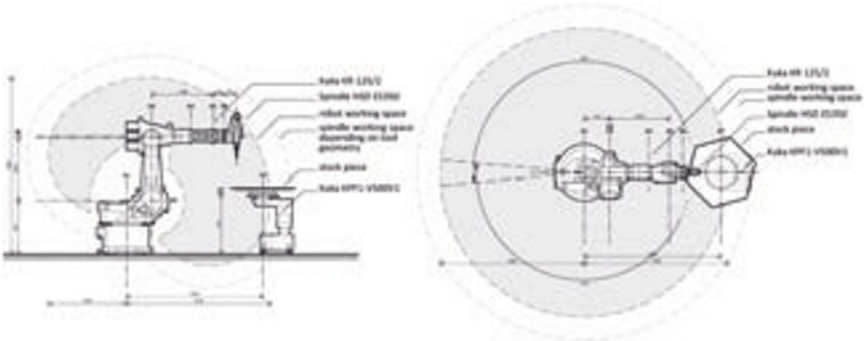

Figure 6 The robot set-up for fabricating the finger-jointed plywood plates consists of a KUKA KR 125/2 robot equipped with a HSD ES 350 spindle unit and a Leitz 20/120 Z4 milling tool as well as a KUKA KPF1-V500V1 turntable.

be fabricated and the normal vector N1 of the connecting plate. The stock piece to be fabricated is cut to shape by a 3-axis milling cycle and subsequently mounted to the turntable by a quick-release lock. The orientation of the local coordinate system in relation to the robot's A1 axis is defined by the centroid of the polygon, a second vector point in the same plane and the plate's normal vector N. All plates are mounted on the turntable with the later outside surface pointing upwards. Whereas concave connection angles can be produced with the tool approaching the stock piece from the top, convex connection angles require the effector to be below the plate (Fig. 7 left). The connection angle determines the tool angle of the three fabrication steps: [i] In a first step, the pre-cut plate's outline is trimmed to the exact dimensions and angle α by end milling. [ii] In the second step the mitre angle defined as the by-sector of the angle 180°- α is cut by end milling with the same tool. [iii] In the third step the finger joints are cut by both the tip and the shank of the same tool at the angle orthogonal to α (Fig. 7 right).

The robot set-up constrains the connection angle α to be considerably smaller than then the geometrically possible -180° to +180°. Both the specification of the effector, as for example the dimensions of the spindle, and the length of the tool, limit the range of producible outline-, miter- and joint-angles (Fig. 8). As the specific angle constraints of all three fabrication

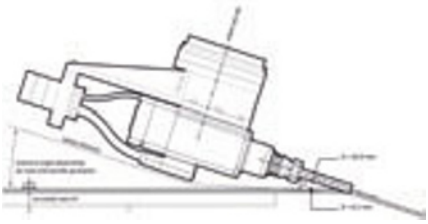

Figure 8 The specific spindle and tool geometry constrains the variable range of the parameter connection angle α.

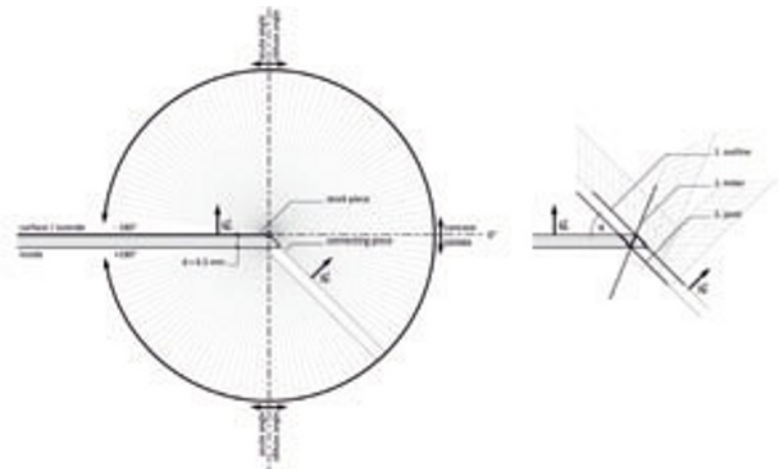

Figure 7 The parameter connection angle α is defined by the normal vectors N0 and N1 of adjacent plates (left) and determines the tool angle of the three steps of fabricating the plate outline, mitres and finger joints (right).

processes are a function of α, they can all be expressed through the limits of the variable range of the parameter connection angle α.

The parameter range of the polygon radius reflecting the plate size also directly depends on the specific robot set-up. The distance between robot and turntable – i.e. axis 1 and axis 7 – in conjunction with the length of the robot arm – i.e. the distance between axis 3 and axis 6 and the robot-kinematics – determines the maximum plate size, especially for convex connection angles, as they require the tool to approach the plate from below. The minimum plate size is constrained by the geometry and dimension of the mounting mechanism on the turntable (Fig. 9).

The important limits of the parameter polygon angle β range are only indirectly influenced by the specific robot set-up. This mainly relates to maintaining a minimum distance d that results from the

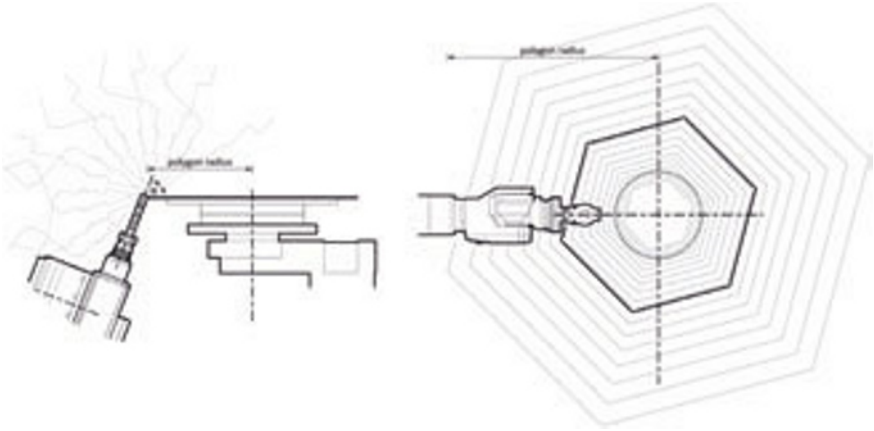

Figure 9 The variable range of the parameter polygon radius reflects the minimum and maximum fabricable plate size.

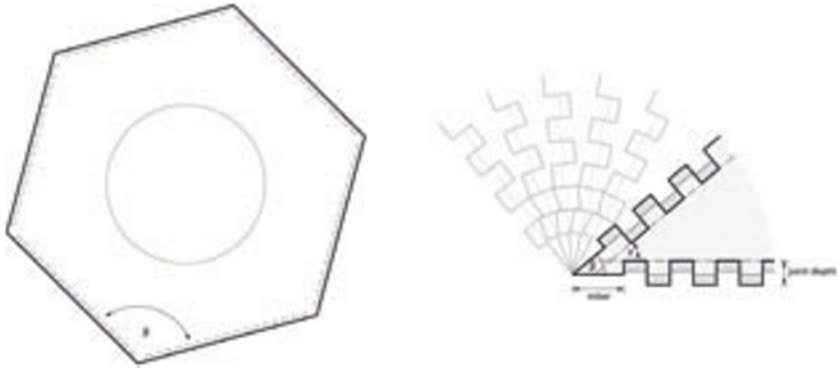

Figure 10 The convex range of the parameter polygon angle β is limited by a minimum distance d between the joints.

joint depth determined by angle α and the convex range of angle β (Fig. 10). Obviously more directly machine-related constraints are the diameter of the mounting mechanism on the turntable, which – together with the maximum reach of the tool – has an effect on the how far β can approach 180° for extreme convex angles. Similarly, the effector dimensions and tool length determines how close β can get to -180° for extreme convex angles.

5. 4 Interdependence of Parameter Min/ Max ranges

The kinematics of the 6-axis robot allow for multiple robot positions to reach the same TCP. Thus the actual numerical limits of the parameters are identified through fabrication simulations (Fig. 11). This process allows not only for establishing the min/max values for each parameter, but also enables the investigation of the interdependence of the parameter ranges. For the subsequent morphospace construction it is of critical importance to understand how one parameter range's limits has an effect on the other, and that this interdependence does usually not constitute a linear relation. For example, the interdependency between the possible plate size expressed through the parameter polygon radius and the producible finger joints expressed through the parameter connection angle α increases nonlinearly. Another example is the interdependency between the connection angle α and the polygon angle β: as the finger joint depth increases the closer angle α gets to 0° and +/- 180° (with the shortest finger joints at +/-90°). This has an effect on the maximum value for polygon angle β to prevent the finger joints of adjacent polygon edges from falling below the minimum distance d.

5.5 Construction of Machinic Morphospaces

Following the definition of the morphological parameters of the building element, the identification of set-up specific fabrication constraints and the interdependence of the

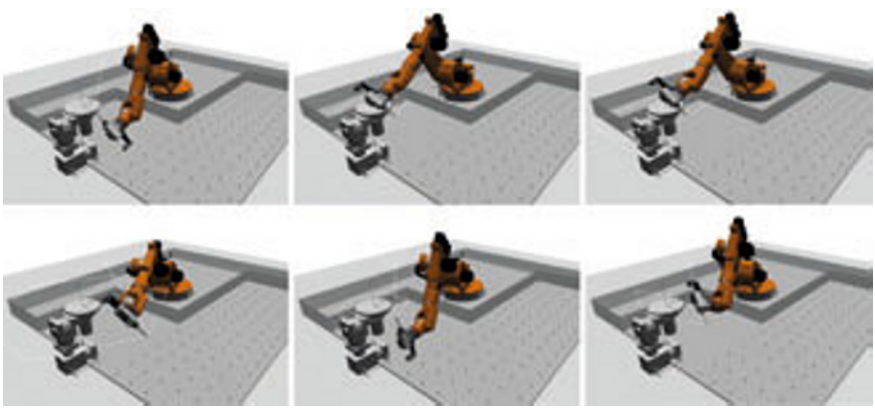

Figure 11 Fabrication simulations determine the minimum (top row) and maximum (bottom row) range of the parameters polygon radius (left), connection angle α (centre) and polygon angle β (right) based on the specific robot-set up.

parameter ranges, a morphospace of robotically fabricated plates with finger joints can be developed. In this case, a Q-type space with three axes representing the [i] polygon radius (0 to 1100 mm), [ii] connection angle α (-180° to +180°) and [iii] polygon angle β (-180° to +180°) was developed. The resulting three-dimensional space describes the theoretical morphospace including all theoretically possible plate morphologies (Fig. 12: white regions). The spatial regions that include all plate morphologies fabricable with the specific 7-axis robot set-up are mapped into this space based on the set-up constraints of the parameter ranges described above (Fig. 12: blue regions). This space, which resides within the theoretical morphospace of a particular building element's entire morphological range but only includes the regions theoretically fabricable with a specific machine, can be termed machinic morphospace (Menges and Schwinn 2012). The concept of machinic morphospace presents significant possibilities for

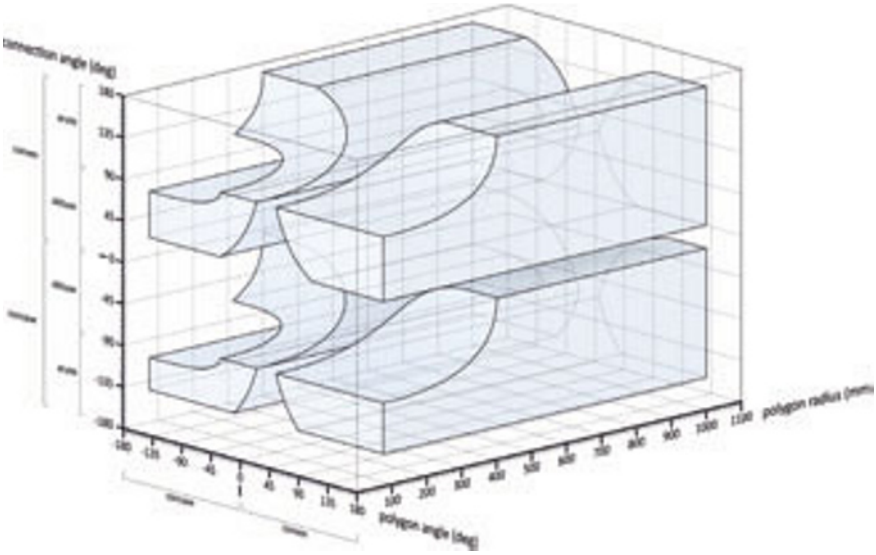

Figure 12 The theoretical morphospace of plate morphologies (white) includes the spatial regions fabricable with the specific 7-axis robot set-up (blue), which is the machinic morphospace based on the min/max ranges of the parameters polygon radius, connection angle α and polygon angle β.

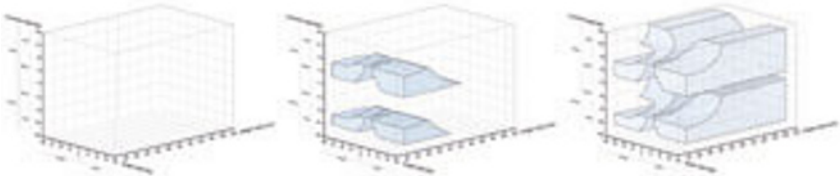

Figure 13 Morphospace of all theoretically possible plate morphologies(left) with morphospace regions fabricable with a 6-axis robot set-up (centre) and a 7-axis robot set-up (left).

morphogenetic design computation: it offers mathematic and non-ambiguous fabrication checks, it allows for concurrent monitoring of producibility during computational form generation and thus provides a critical step in enabling a full design exploration of robotic fabrication without preconceived limits to what may or may not be possible.

5.6 Shifting Machinic Morphospaces

In addition to the design exploration of one robot configuration, the machinic morphospace also allows for rapid adaptations to changes in the specific set-up. For example, within the same morphospace of all theoretically possible plate morphologies (Fig. 13a) both the regions fabricable with a 6-axis robot set-up (Fig. 13b) and the regions producible with the 7-axis robot set-up (Fig. 13c) can be registered and compared. In this case, the related expansion of the machinic morphospace identifies the significant gain of morphological variance enabled by the inclusion of the turntable. In the same way, multiple machinic morphospaces representing changes to variables in the robot set-up (i.e. different tools, different axes positions, different mounting mechanisms, etc) can be mapped into the same theoretical morphospace to register possible shifts and expansions to the space of fabricable building element morphologies.

5.7 Hyperdimensional Morphospaces

The research example project introduced above also implies two other relevant aspects for the transfer of the morphospace concept to morphogenetic design computation in architecture: First, it indicates that even for a mono-material, single element construction system a complex morphospace is required. Taking the interrelation between local building element morphology, regional surface/structure morphology and global building morphology into account, the need for additional parameters becomes obvious. A larger number of possible parameters, which means a larger number of possible dimensions of form, can be employed to construct a hyper-dimensional space of possible morphologies (McGhee 2007), potentially even including multiple scales of morphological articulation or different levels of hierarchy. A second important point is the recognition that multidimensional theoretical morphospaces, even the three-dimensional one introduced

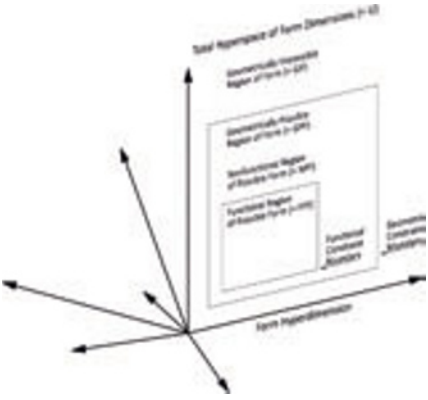

Figure 14 Each dimension of a theoretical hyperdimensional space represents one parameter of form. The total hyperdimensional space is divided into geometrically impossible (GIF) and possible (GPF) regions of form by the geometric constraint boundary. Within the GPF region the functional constraint boundary separates the non-functional (NPF) and functional (FPF) region of form. Based on: McGhee (2007).

above, also include a geometrically impossible region of form (GIF). The geometric constraint boundary separates this region from the geometrically possible region of form (GPF), which in itself is divided into a non-functional region of possible form (NPF) and a functional region of possible form (FPF) by the functional constraint boundary (McGhee 2006) (Fig. 14b). In the research example the FPF region equals the machinic morphospace, which may be subject to yet another set of sub-regions.

5.8 Navigating the Machinic Morphospace

In the theoretical morphospace of robotically fabricated plate morphologies presented, one sub-region of the machinic mophospace is of particular interest: the one that includes element morphologies with a high performance capacity. In other words, one can say that the machinic morphospace still describes a vast number of plate morphologies which includes plate configurations that make more or less sense in regards to architectural, structural or environmental performance. Thus, one challenge of morphogenetic design is not only to maintaining coherency with the FPF region, but also to computationally populate particularly promising areas of it.

In the research project presented above, biomimetics has been identified as a suitable approach for navigating the machinic morphospace. The bottom-up design development of the material system – the plywood plate structure based on robot-fabricated finger joints – and the related machinic morphospace was "filtered" by a top-down biomimetic method. This entails the identification of a technical problem or opportunity (here: the plate system), the search for biological analogies that provide the base for a performance gain of a technical system, the subsequent detection of relevant principles, their abstraction and transfer from biology to design (Knippers and Speck 2012).

The plate skeleton morphology of the sand dollar (Clypeasteroida), a subspecies of the sea urchin (Echinoidea), was recognized as a suitable biological system as it consist of discreet polygonal plates that are connected by finger joint-like calcite protrusions at their edges (Seilacher 1979). The sand dollar's shell has evolved ways to compensate the innate weakness of finger joints with regard to transferring bending moments or tensile forces. It has developed plate morphologies that are stabilized only by shear forces acting along the plates' edges, and thus capitalizing on the inherent structural capacity of finger joints. Eight morphological principles relevant for this structural performance were identified and embedded in algorithmic design rules. By synthesising the principles of performance-oriented design through functional

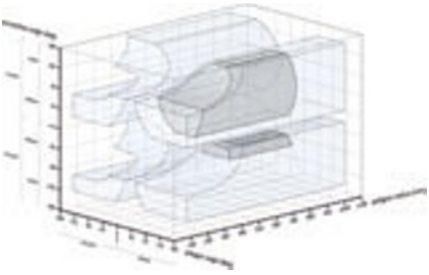

Figure 15 The plate morphologies actually produced during the construction of the prototype lightweight structure all populate a particular region (grey) of the theoretical machinic morphospace of fabricable plate morphologies (light blue).

morphology and the constraints of producibility through machinic morphospaces the computational design process enabled the exploration of complex plate morphologies providing both exceptional structural performance and novel architectural opportunities. This was verified by the construction of a full scale demonstrator, the ICD/ITKE Research Pavilion (Knippers, Menges et al 2012) developed by the Institute for Computational Design and the Institute of Building Structures and Structural Design at the University of Stuttgart. The structure consists of more than 850 geometrically unique, robotically fabricated birch plywood plates with more than 100,000 individual finger joints, which only populate a particular region of the machinic morphospace (Fig. 15). The performance capacity of the plate morphology is demonstrated by the fact that the entire pavilion (Fig. 16) could be built exclusively out of 6.5 mm thin sheets of plywood, resulting in a very materially efficient and lightweight construction system that envelopes a gross spatial volume of 200m³ consuming only 2m³ of wood. For a more comprehensive description of the integrative computational design and robotic fabrication processes of this research project refer to the research paper "Robotically Fabricated Wood Plate Morphologies" (page 48).

6 Conclusion

The transfer of the concept of morphospaces from theoretical morphology in biology to the realm of robotic fabrication and design computation enables the definition of theoretical morphospaces for digitally produced building elements. These multidimensional spaces make it possible to differentiate between regions containing geometrically impossible, geometrically possible and robotically fabricable element morphologies, with the latter region being defined as the machinic morphospace of a specific robot set-up. The rapid adaptability to changes in the robot set-up and a biomimetic method for exploring the machinic morphospace has been explained along a particular project example which shows that machinic morphospaces allow the synthesizing of the processes of form generation and materialisation through robotic fabrication in one integrative, morphogenetic computational design process.

Figure 16 The prototype structure ICD/ITKE Research Pavilion 2011 consists of more than 850 geometrically unique, robotically fabricated plate morphologies with more than 100,000 individual finger joints. The use of 6.5mm plywood only demonstrates the system's structural performance capacity.

The concept of machinic morphospaces also offers promising opportunities for future research. In addition to the development of more complex multidimensional spaces describing a larger number of parameters, further research on agent-based modelling for robotically fabricable construction systems has been identified as a particularly interesting area of investigation. Here, form generating agents can be informed in direct feedback with the concurrent agent-based navigation of multidimensional machinic morphospace, altering the generative agents' behavioural rules based on the corresponding position within the morphospace. Another promising field for employing machinic morphospaces is in the application of real-time, online robot control. In this context machinic morphospaces can provide a robust framework for checking the responsive control of the robot based on data collected at runtime sensing or scanning.

Most importantly, the concept of machinic morphospaces may provide one relevant facet for the design exploration of the dramatically increased production possibilities in architecture offered by robotic fabrication.

Acknowledgements

The author expresses his sincere gratitude to Tobias Schwinn and Oliver David Krieg for their contributions to the content of the paper, and to Oliver David Krieg for his significant help with the illustrations. In addition, he would like to thank the entire project team of the ICD/ITKE Research Pavilion 2011 including all participating students and Steffen Reichert and Tobias Schwinn of the Institute for Computational Design as well as Professor Jan Knippers, Markus Gabler, Riccardo La Magna, and Frederic Waimer of the Institute of Building Structures and Structural Design at the University of Stuttgart.

References

Ahlquist S and Menges A 2011, 'Computational Design Thinking' in Menges, A and Ahlquist, S (eds), Computational Design Thinking, John Wiley and Sons, London, pp. 10-29.

Alcorn A 1996, Embodied Energy Coefficients of Building Materials, Centre for Building Performance Research, Wellington.

Eble GJ 2000, 'Theoretical morphology: state of the art', Paleobiology, 26, pp. 520-528.

Fleischmann M, Knippers J, Lienhard J, Menges A and Schleicher S 2012, 'Material Behaviour: Embedding Physical Properties in Computational Design Processes', Architectural Design, Vol. 82 No. 2, pp. 44-51.

Fleischmann M and Menges A 2011, "ICD/ITKE Research Pavilion: A case study of multi-disciplinary computational design" in Gengnagel C, Kilian A, Palz N and Scheurer F (eds.), *Computational Design Modeling*, Springer, Berlin, pp. 239-248.

Hensel M and Menges A 2008, "Inclusive Performance: Efficiency versus Effectiveness", *Architectural Design*, Vol. 78 No. 2, pp. 54-63.

Hensel M, Menges A and Weinstock M (eds.) 2006, *Techniques and Technologies in Morphogenetic Design*, Wiley Academy, London.

Hensel M, Menges A and Weinstock M (eds.), 2004, *Emergence - Morphogenetic Design Strategies*, Wiley Academy, London.

Knippers J and Speck T 2012, "Design and construction principles in nature and architecture", *Bioinspiration and Biomimetics*, vol. 7, no. 1.

Knippers J, Menges A, La Magna R, Schwinn T, Waimer F 2012, "From Nature to Fabrication: Biomimetic Design Principles for the Production of Complex Spatial Structures", P*roceedings of the Advances in Architectural Geometry 2012 Conference*, Springer, Wien.

Kolb J 2008, *Systems in Timber Engineering: Load-bearing Structures and Component Layers*, Birkhäuser, Basel.

Mardia KV, Kent JT, Bibby JM 1979, *Multivariate Analysis*, Academic Press, London.

McGhee GR Jr. 1991, "Theoretical morphology: the concept and its applications", in Gilinsky, NL and Signor, PW (eds.), *Analytical Paleobiology*, Paleontological Society, Knoxville, pp. 87-102.

McGhee GR Jr. 1999, *Theoretical Morphology: the concept and its applications*, Columbia University Press, New York.

McGhee GR Jr. 2006, "Exploring the spectrum of existent, non-existent and impossible biological form: a research program" in Laublicher, M and Müller, GB (eds.), *Modeling Biology: Structures, Behaviors, Evolution*, MIT Press, Cambridge (MA).

McGhee GR Jr. 2007, *The Geometry of Evolution*, Cambridge University Press, Cambridge.

Menges A 2005, "Pluripotent Components - An Alternative Approach to Parametric Design", *AA Files*, no. 52, pp. 63-74.

Menges A 2006, "Polymorphism", *Architectural Design*, vol. 76, no. 2, pp. 78-87.

Menges A 2008, "Integral Formation and Materialisation: Computational Form and Material Gestalt", in Kolarevic B. and Klinger K. (eds.), *Manufacturing Material Effects: Rethinking Design and Making in Architecture*, Routledge, New York, pp. 195–210.

Menges A 2010, "AA Membrane Canopy in London", *Detail*, vol. 2010, no. 04, pp. 350-353.

Menges A 2011, "Simple Systems – Complex Capacities: Integrative Processes of Computational Morphogenesis in Architecture", *TECHNE Journal of Technology for Architecture and Environment*, no. 02/2011, pp. 68-77.

Menges A 2012, "Biomimetic design processes in architecture: morphogenetic and evolutionary computational design", *Bioinspiration and Biomimetics*, vol. 7, no. 1.

Menges A, Schleicher S, Fleischmann M 2011, "Research Pavilion ICD/ITKE", in Glynn, R and Sheil, B (eds), *Proceedings of the Fabricate: Making Digital Architecture Conference, University College London*, Riverside Architectural Press, Waterloo, pp. 22-27.

Menges A and Schwinn T 2012, "Manufacturing Reciprocities", *Architectural Design*, vol. 82, no. 2, pp. 118-125.

Miller D (ed.) 1995, *Goethe. The collected works.* Volume 12, Scientific studies, Princeton University Press, Princenton.

Mitteroecker P and Bookstein FL 2007, "The Conceptual and Statistical Relationship between Modularity and Morphological Integration", *Systematic Biology*, vol. 56, no. 5, pp. 818-836.

Mitteroecker P and Huttegger S 2009, "The Concept of Morphospaces in Evolutionary and Developmental Biology: Mathematics and Metaphors". *Biological Theory*, vol. 4, no. 1, pp. 54-67.

Raup DM and Michelson A 1965, "Theoretical morphology of the coiled shell", *Science* 147, pp. 1294-1295.

Raup DM 1966, "Geometric analysis of shell coiling: general problems", *Journal of Paleontology*, 40, pp. 1178-1190.

Rasskin-Gutman D and Buscalioni A 2001, "Theoretical Morphology of the Archosaur (Reptilia: Diapsida) Pelvic Girdle", *Paleobiology*, vol. 27, no. 1, pp. 59-78.

Seilacher A 1979, "Constructional Morphology of Sand Dollars", *Paleobiology*, 5(3), 191-221.

Thompson D'Arcy 1961, *On Growth and Form*, Cambridge University Press, Cambridge.

Weinstock M 2004, "Morphogenesis and the Mathematics of Emergence", *Architectural Design*, vol. 74, no. 3, pp. 10-17.