ESE 3700 Project 2:
A 16×4 SRAM in 22 nm PTM HP

Lucas Krippendorff

April 2026

1 Introduction

This report describes the design, validation, and characterization of a 16×4 single-port SRAM implemented in the 22 nm PTM high-performance BSIM4 process at $V_{DD} = 0.8\,\mathrm{V}$. The memory provides synchronous, full-word (4-bit) random read/write access using a 4-bit address, a single clock, and an active-high write enable. Correct operation is demonstrated across a suite of functional tests, and the design is characterized against the project figure of merit

$$\mathrm{FOM} \;=\; 60 \cdot \mathrm{BitcellArea} \cdot P \cdot D^2,$$

using the worst-case access delay and the average power during the specified all-zeros/all-ones write workload. The resulting FOM is $\mathbf{8.46 \times 10^6}\ \mu\mathrm{m} \cdot \mu\mathrm{W} \cdot \mathrm{ps}^{\mathbf{2}}$ at a 320 ps measurement period (3.125 GHz), well above the 500 MHz requirement.

2 Top-Level Architecture

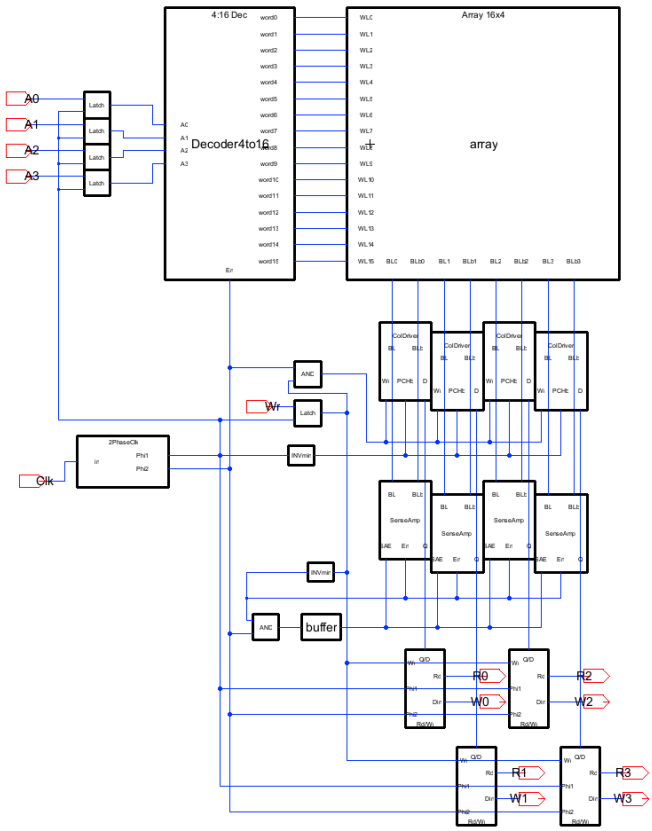

Figure 1: Top-level schematic (`main`). External pins: `A0--A3`, `Clk`, `Wr`, `bit0--bit3`. V_{DD}/GND are handled as globals through each leaf cell; they are not exported on the top icon.

The memory is hierarchically composed of the following sub-cells, each of which is described in Section 3:

- **2PhaseClock** – generates non-overlapping clocks ϕ_1 (precharge) and ϕ_2 (access) from the single input `Clk`.
- **Decoder4to16** – decodes `A0--A3` and gates each row output with ϕ_2 to produce one of sixteen word-lines WL[0..15].
- **array** – 16 instances of `wordRow`, each containing four 6T `Bitcells` sharing a common WL.
- **ColumnDriver** $\times 4$ – contains the precharge PMOS pair (gated by `PCHb`) and a tri-stated write driver (gated by `Wr`).
- **SenseAmp** $\times 4$ – an isolated latch-type sense amplifier (Section 3.5).
- **ANDmin + buffer** – generates SAE = AND($\phi_{2,\text{delayed}}$, $\overline{\text{Wr}}$) and buffers it to all four SAs.

Shared 4-bit I/O bus. To keep the external pinout small, each column's column-driver input `D[i]` and sense-amp output `Q[i]` are merged onto a single bidirectional net `bit[i]`. Two tri-states

prevent contention on this bus: the sense-amp output is tri-stated by $\overline{\text{Wr}}$ during write (allowing the external driver to win the bus), and the column driver is tri-stated by `Wr` during read (allowing the sense amp to observe the bitlines undisturbed). This is the textbook common-I/O pattern for single-port SRAMs.

Control-signal routing. The external `Wr` signal fans out to (1) the column-driver write enables, (2) an inverter producing $\overline{\text{Wr}}$ which gates the sense-amp output tri-states, (3) one input of the SAE AND gate, and (4) the NMOS footer enable of each sense amp. The $\overline{\text{Wr}}$ inverter is sized at $W = 4\times$ minimum to cover the combined load of roughly 620 nm of gate width on this network.

3 Sub-Component Design and Sizing

All sizings are expressed in nanometres of gate width W at fixed $L = 22\,\text{nm}$. Minimum-width NMOS is 44 nm; minimum-width PMOS is typically sized at $\beta = 2$ (88 nm) unless read-stability or write-ability considerations require otherwise. A one-stage fan-out-of-four (FO4) delay in this process is approximately 10 ps at $V_{DD} = 0.8\,\text{V}$, measured in a standalone inverter chain (`/tmp/inv_fo1.spi`).

3.1 6T Bitcell

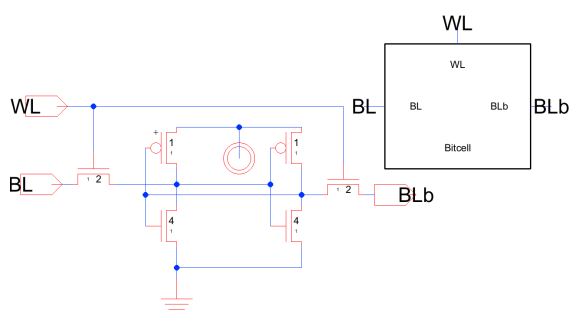

Figure 2: 6T SRAM bitcell. Width ratio PD:AX:PU = 4 : 2 : 1 (88 nm : 44 nm : 22 nm).

The storage cell is the standard six-transistor SRAM bitcell: a pair of cross-coupled CMOS inverters and two NMOS access transistors. Width ratios were chosen to satisfy the two competing static constraints:

Read stability. During a read the access transistor must not allow the precharged high bitline to flip the internal low node. This requires the pulldown NMOS to be strong relative to the access NMOS (the "cell ratio" or β_r). With PD : AX = 88 : 44 = 2, the low node rises only a few tens of millivolts during access – well below the inverter trip point.

Write-ability. During a write the access transistor must be able to pull the internal high node below the inverter trip point against the pullup PMOS. This requires the pullup PMOS to be *weak* relative to the access NMOS (the "pullup ratio"). With PU : AX = 22 : 44 = 0.5, the access device wins cleanly.

Combined, the absolute ratio PD : AX : PU = 4 : 2 : 1 biases the cell slightly toward read stability relative to the textbook 2 : 1 : 1 point, which is a sensible trade-off given that reads happen on every cycle regardless of `Wr`. The sum of widths is

$$\text{BitcellArea} \;=\; 2(88) + 2(44) + 2(22) \;=\; 308\,\text{nm} \;=\; 0.308\,\mu\text{m},$$

which is the quantity used in the FOM (Section 7.3).

3.2 Two-Phase Non-Overlapping Clock Generator

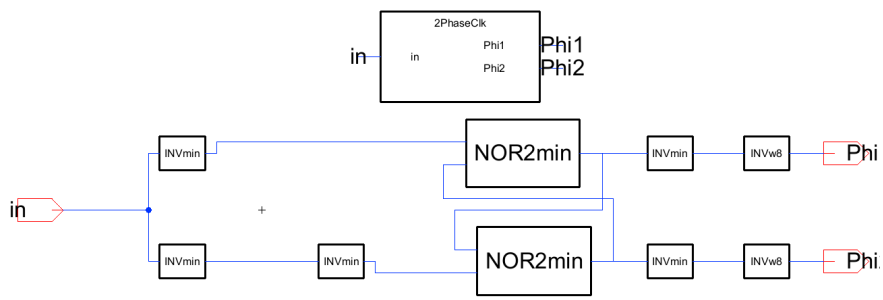

Figure 3: Two-phase non-overlapping clock generator. The cross-coupled `NOR2_min` guarantees that ϕ_1 and ϕ_2 are never simultaneously high.

A single external `Clk` is converted into two non-overlapping clocks: ϕ_1 is the precharge phase and ϕ_2 is the access phase. The non-overlap gap between ϕ_1 falling and ϕ_2 rising is the entire reason for using two phases, and is what guarantees that the precharge PMOS pair is fully off before any word-line rises.

Each output path uses the chain `NOR2_min` → `INV_min` → `INV_sized` so that the two inverters after the cross-coupled NOR preserve the intended polarity (a single inverter after the NOR would swap the ϕ_1/ϕ_2 labels). The final-stage driver on ϕ_2 is sized at $W = 8\times$ minimum (`INV_w8`, $W_N \approx 350\,\text{nm}$, $W_P \approx 700\,\text{nm}$) because it drives one NAND input per row, or 16 NAND inputs total ($\approx 700\,\text{nm}$ of gate width). The corresponding final-stage driver on ϕ_1 can remain minimum because it drives only one downstream inverter (the one that produces `PCHb`).

PCHb polarity: `PCHb` $= \overline{\phi_1}$, not $\overline{\phi_2}$. The precharge control is active-low. The obvious shortcut would be `PCHb` $= \phi_2$, which has the correct polarity and needs no extra gate. That option was rejected: ϕ_2's rising edge would simultaneously turn the precharge PMOS off *and* enable the row NAND that produces WL, causing brief contention between the still-precharging bitline and the access path on every read. Deriving `PCHb` from $\overline{\phi_1}$ instead costs one inverter but lets the non-overlap

gap do its job: ϕ_1 falls, `PCHb` rises, precharge turns off, and only *after* the non-overlap gap does ϕ_2 rise and WL assert. This is the textbook justification for paying for two clock phases.

3.3 4-to-16 Row Decoder

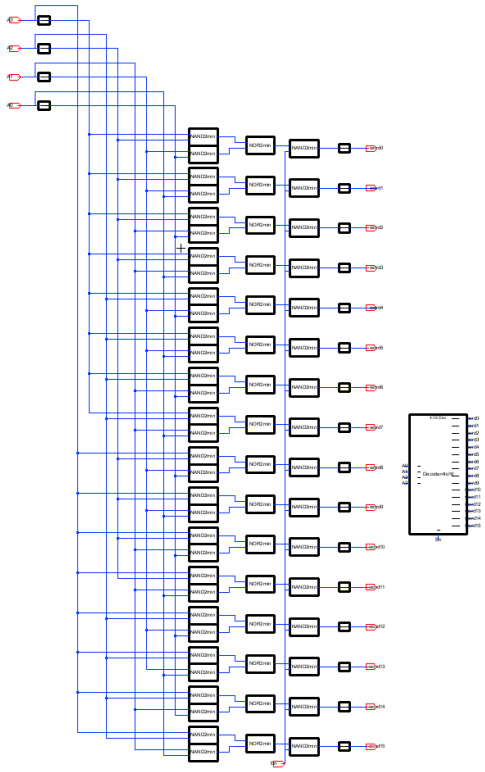

Figure 4: 4-to-16 row decoder. Each row output is WL[i] = NAND(dec[i], ϕ_2) followed by an inverter, giving the required positive-logic, ϕ_2-gated word-line pulse.

The four address bits are decoded through a conventional AND tree into 16 one-hot row lines dec[i]. Each row output is then gated with ϕ_2 through a `NAND2_min` and an `INV_min`, so WL[i] is high only when (a) the address selects row i, and (b) the SRAM is in its access phase. The ϕ_2 gating is what makes changes to the address during the precharge phase harmless – WL cannot rise until the next access phase begins, and the precharge/access invariant (Section 4) keeps the cell contents undisturbed in the interim.

Each WL drives four access-transistor gates (one per column), for roughly 175 nm of gate capacitance – easily within the drive of the minimum inverter that terminates the decoder row.

3.4 Column Driver and Precharge

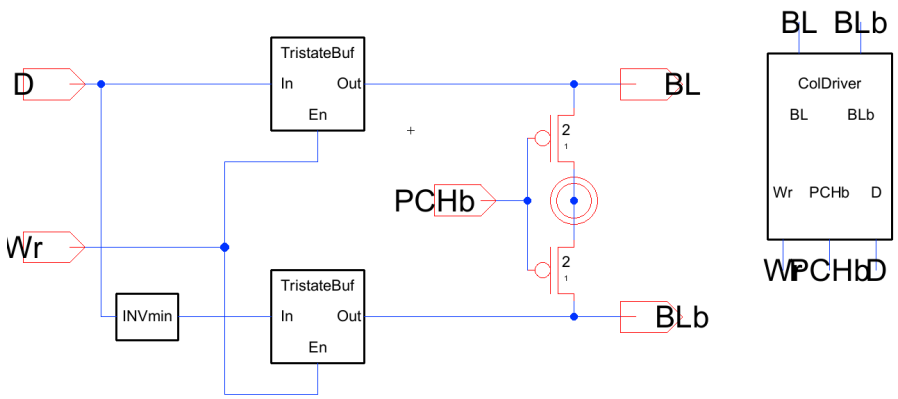

Figure 5: One of four identical column drivers. The two PMOS at the top are the precharge pair (gated by `PCHb`); the lower tri-state write path (`RdWr`) drives BL/BLb from the shared bus during write and goes high-Z during read.

Each column has two responsibilities that the column driver multiplexes in time:

1. **Precharge.** Two PMOS, one on BL and one on BLb, are gated by `PCHb`. When `PCHb` is low, both bitlines are pulled to V_{DD}; when it rises, both PMOS turn off and the bitlines are held high by their own capacitance for the duration of the access. Each precharge PMOS is sized at $W \approx 176\,\text{nm}$; the driving `PCHb` inverter (`INV_sized`) is sized at $W = 4\times$ to match the combined $1.4\,\mu\text{m}$ gate capacitance across four columns at roughly FO4.

2. **Write.** The write path takes `bit[i]` from the shared bus, drives it onto BL and its complement onto BLb, and tri-states when `Wr` is low. The tri-state is what allows the same BL net to be driven by the column driver during write and passively observed by the sense amp during read.

No explicit lumped bitline capacitance is added in simulation: the 22 nm transistor models already include junction and diffusion capacitance at source/drain, so adding a parallel `Cbl` would double-count.

3.5 Sense Amplifier

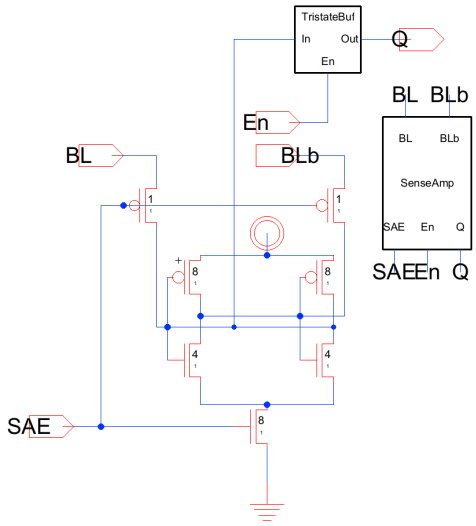

Figure 6: Isolated latch-type sense amplifier. Cross-coupled CMOS inverter pair with two PMOS isolation pass gates between the bitlines and the internal latch nodes, and an NMOS footer gated by SAE. Topology adapted from [1].

The sense amplifier is an *isolated* latch-type rather than a plain bitline-coupled latch. Two PMOS pass transistors, gated by SAE (active-low from the sense-amp's perspective), connect BL and BLb to the internal latch nodes during signal development. When SAE rises, the pass PMOS turn off, isolating the latch from the heavy bitline capacitance, and the NMOS footer (gated by SAE through the internal `En`) turns on to fire the latch. The regeneration then operates on the small internal node capacitance alone, which is considerably faster and lower-energy than a footer-only latch that must drag the bitlines through a full transition.

Control gating and output tri-state. The sense amp is armed only during read: its `En` pin is tied to $\overline{\mathrm{Wr}}$, so the footer is off during write and the latch cannot be disturbed by the column driver. Its output, which drives `bit[i]` on the shared bus, is tri-stated by $\overline{\mathrm{Wr}}$ so that the column driver wins the bus during write.

SAE generation. SAE is produced as $\mathrm{SAE} = \mathrm{AND}(\phi_{2,\mathrm{delayed}}, \overline{\mathrm{Wr}})$ by an `ANDmin` followed by a `buffer`, with $\phi_{2,\mathrm{delayed}}$ coming from a short chain of `INV_min` stages off ϕ_2. The target delay from ϕ_2 rise to SAE rise is 75–100 ps. At less than roughly 50 ps the bitline differential is too small for the sense amp to resolve reliably; at greater than 100 ps the bitline has already developed well past the SA's offset and additional delay is wasted. Measured values are reported in Section 5.

3.6 Supporting Cells

Table 1: Supporting cells and their canonical sizings.

Cell	W_N (nm)	W_P (nm)	Notes	Used by
`INV_min`	44	88	minimum	decoder, SAE chain, glue
`INV_sized`	176	350	4× min	`PCHb`, $\overline{\text{Wr}}$, SAE buffer
`INV_w8`	350	700	8× min	ϕ_2 final driver
`NAND2_min`	88	88	min	decoder row gating
`NOR2_min`	44	176	min	non-overlap latch
`buffer`	–	–	two `INV`s	SAE distribution
`wordRow`	–	–	composite	4 `Bitcells` w/ shared WL
`TristateBuf` / `RdWr`	–	–	composite	write enable path

4 Timing Requirements for Correct Operation

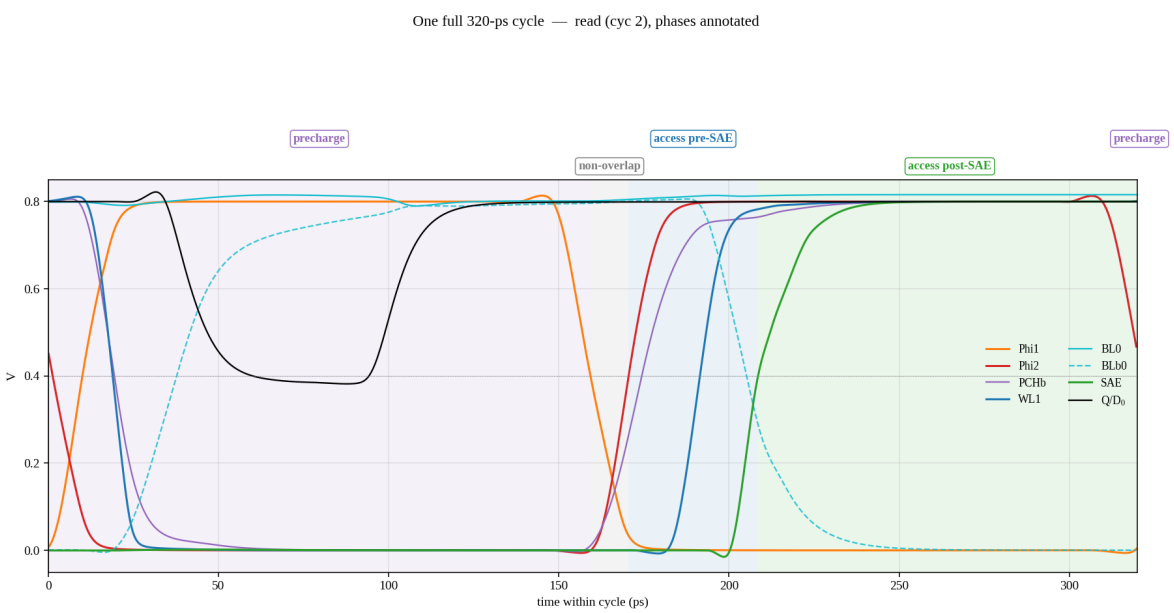

Figure 7: One 320 ps clock period showing the four phases – precharge, non-overlap gap, access pre-SAE, access post-SAE – overlaid with ϕ_1, ϕ_2, `PCHb`, WL, BL/BLb, SAE, and the internal sense-amp output Q.

Correct read and write operation is guaranteed by six invariants, each of which corresponds to a specific ordering of rising and falling edges inside one clock cycle:

1. **Precharge completes before WL rises.** Ensured because `PCHb` $= \overline{\phi_1}$ rises with the falling edge of ϕ_1, and WL depends on ϕ_2, which rises only *after* the non-overlap gap.

2. **WL rises before SAE fires.** Ensured because SAE goes through the `INV_min` delay chain off ϕ_2 (target 75–100 ps), while WL goes through only a `NAND2+INV` (approximately 20 ps – see t_2 in Table 2).

3. **SAE fires after the bitline has developed beyond the SA's offset.** Ensured by tuning the SAE delay so the bitline differential at SAE rise exceeds 50 mV (Table 2, t_3 to t_4).

4. **SAE falls before the next precharge begins.** Automatic: SAE follows ϕ_2 and is further gated by $\overline{\mathrm{Wr}}$.

5. **Write driver is tri-stated during read.** Enforced by the column driver's internal `Wr` gate.

6. **Sense-amp output is tri-stated during write.** Enforced by the SA's output $\overline{\mathrm{Wr}}$ gate; also its footer is disabled so the latch cannot fight the column driver on BL/BLb.

These six conditions are all satisfied for any non-overlap gap greater than the worst-case precharge-off delay, any SAE delay greater than the bitline development time to 50 mV, and any clock period greater than $T_{\min}$. The measurement in Section 7.1 demonstrates that $T_{\min} = 298$ ps.

5 Read and Write Operations with Critical Path

The critical path for both operations is the access-phase chain from the rising edge of ϕ_2 to either the output driver reaching $V_{DD}/2$ (read) or the cell's internal storage node reaching $V_{DD}/2$ (write). The waveforms below are from `probed_320ps_v2.spi`, an ngspice transient of the full SRAM driven by the `mainTest1` stimulus sequence (`WR 1111` → `RD 1111` → `WR 0000` → `RD 0000` at address 1). The write endpoint is measured on the internal bitcell node `Xmain@0.Xarray@0.XwordRow@14.XBitcell@0.net@35` rather than on a bitline, because the bitline can reach its final value before the cross-coupled pair has actually latched. Defining write-complete at the bitline would systematically under-report the true access time.

5.1 Read Operation

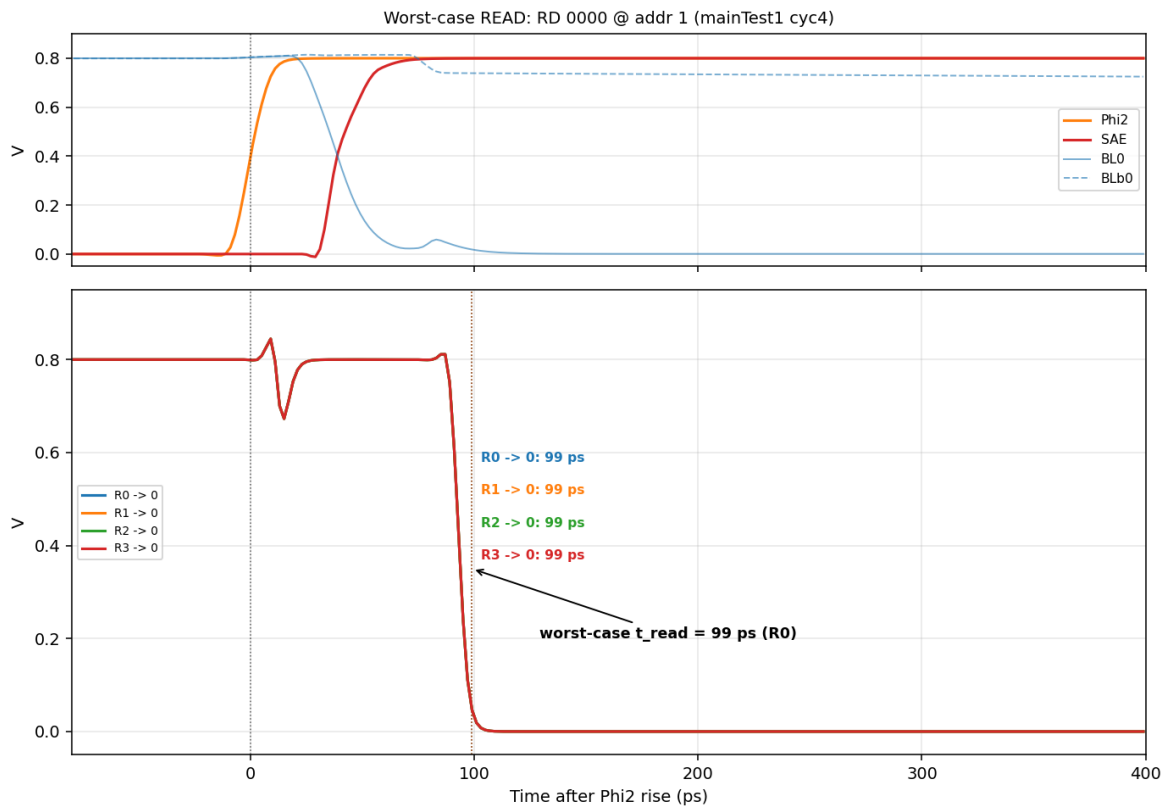

Figure 8: Worst-case read (cycle 4: read 0 after previously written 1). Markers $t_1 \ldots t_6$ correspond to the stages in Table 2.

Table 2: Read critical-path breakdown at $T = 320\,\text{ps}$. Offsets are from the rising edge of ϕ_2. Threshold convention: $V_{DD}/2 = 0.4\,\text{V}$ for logic edges, $50\,\text{mV}$ for bitline differential.

Mark	Offset (ps)	Event	Stage delay (ps)
t_1	0.0	ϕ_2 rises – access begins	–
t_2	20.9	WL1 rises – decoder NAND+INV propagation done	20.9
t_3	23.4	BL differential reaches 50 mV	2.5
t_4	38.0	SAE fires – SA armed	14.6
t_5	66.0	Q/D_0 at $V_{DD}/2$ – SA resolved	28.0
t_6	**91.9**	R_0 at $V_{DD}/2$ – read latched	25.9

Total worst-case read delay: $\mathbf{D}_{\text{read}} = \mathbf{91.9}\,\text{ps}$.

5.2 Write Operation

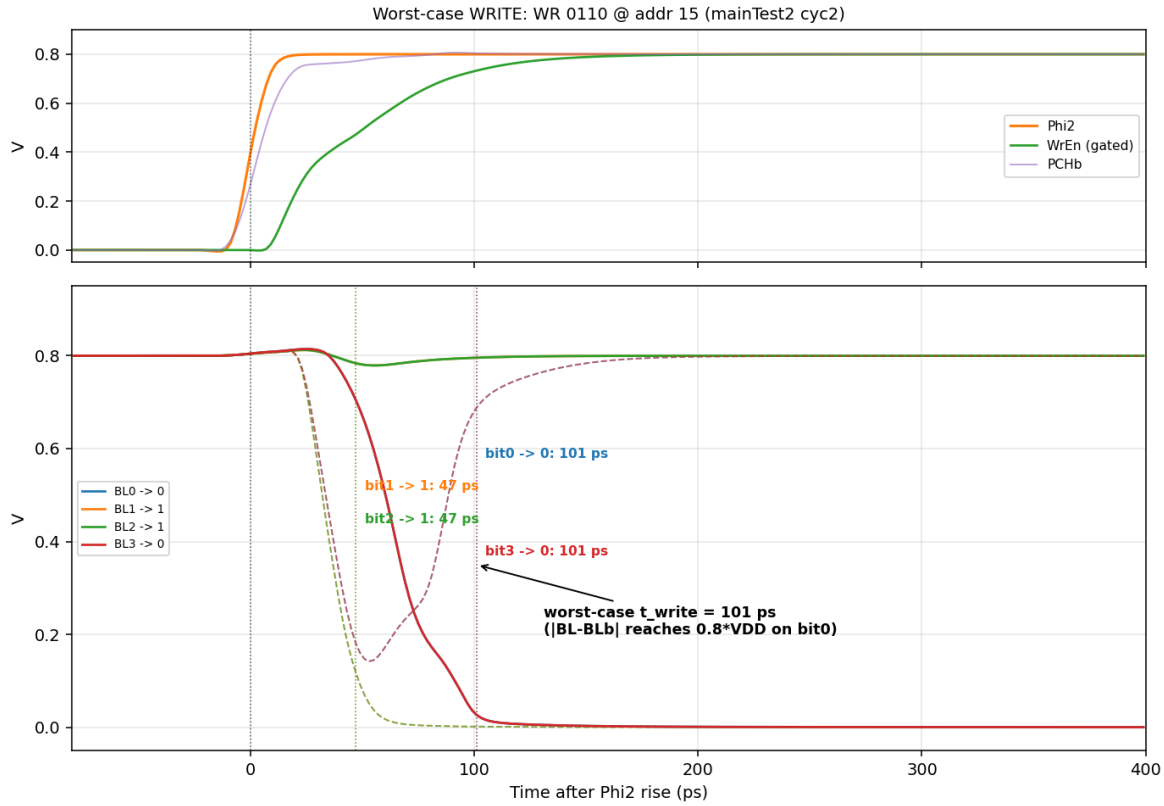

Figure 9: Worst-case write (cycle 3: write 0 over a previously stored 1). Markers $t_1 \ldots t_5$ correspond to the stages in Table 3.

Table 3: Write critical-path breakdown at $T = 320\,\text{ps}$.

Mark	Offset (ps)	Event	Stage delay (ps)
t_1	0.0	ϕ_2 rises – access begins	–
t_2	21.0	WL1 rises	21.0
t_3	34.6	WrEn rises – column drivers enabled	13.6
t_4	64.5	BL0 crosses $V_{DD}/2$ – data on bitline	29.9
t_5	**90.5**	Cell internal node at $V_{DD}/2$ – write committed	26.0

Total worst-case write delay: $\mathbf{D}_{\text{write}} = \mathbf{90.5}\,\text{ps}$.

Worst-case delay (reported). $D = \max(D_{\text{read}}, D_{\text{write}}) = 91.9\,\text{ps}$.

6 Design Validation and Test Cases

Correctness was validated bottom-up, starting from the bitcell and moving outward.

6.1 Bitcell Unit Test

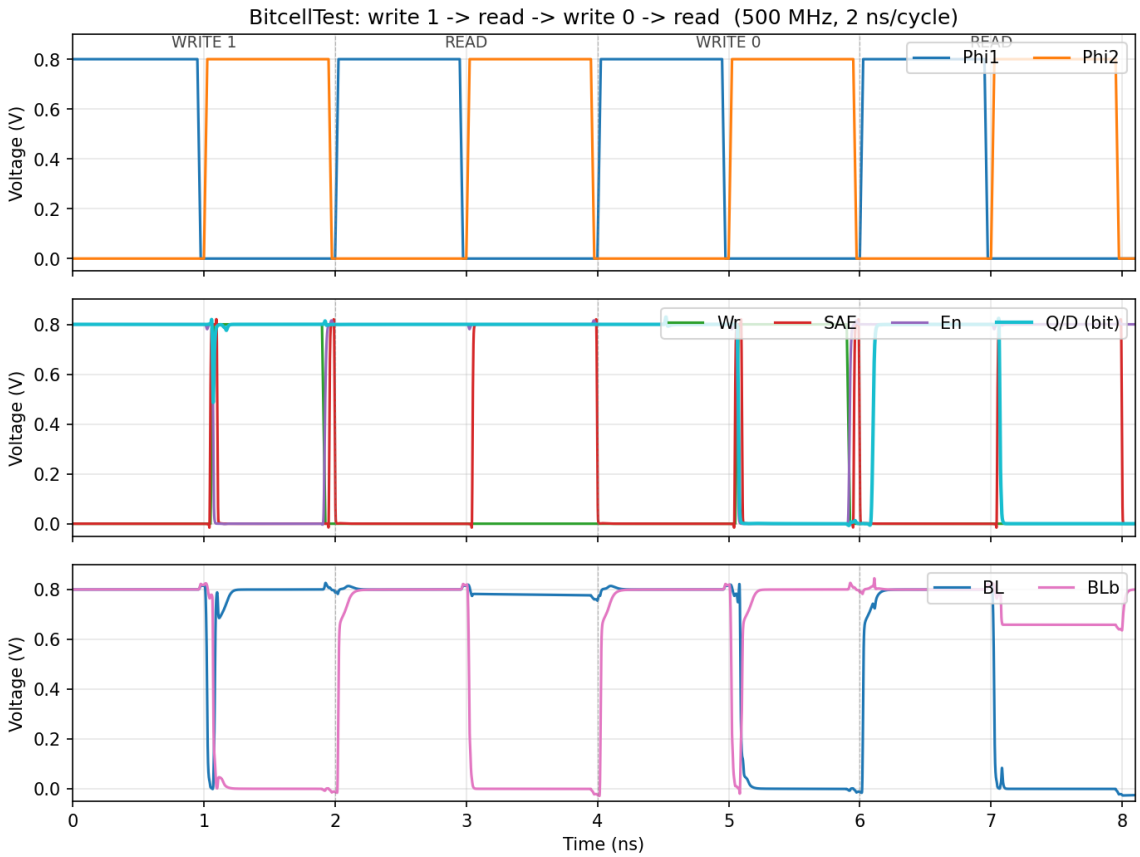

Figure 10: Bitcell unit test. A single cell is exercised by a PWL stimulus covering write 0, write 1, and a non-destructive read of each polarity. The internal storage nodes Q and $\overline{Q}$ track the written value and remain stable during the subsequent read.

The bitcell test covers the two independent correctness conditions: *write ability* (the cell can be flipped in both directions) and *read stability* (the cell survives a read in both polarities without disturbing the stored value). Both conditions are met for the chosen $4:2:1$ sizing.

6.2 Full-Array Functional Test (`mainTest1`)

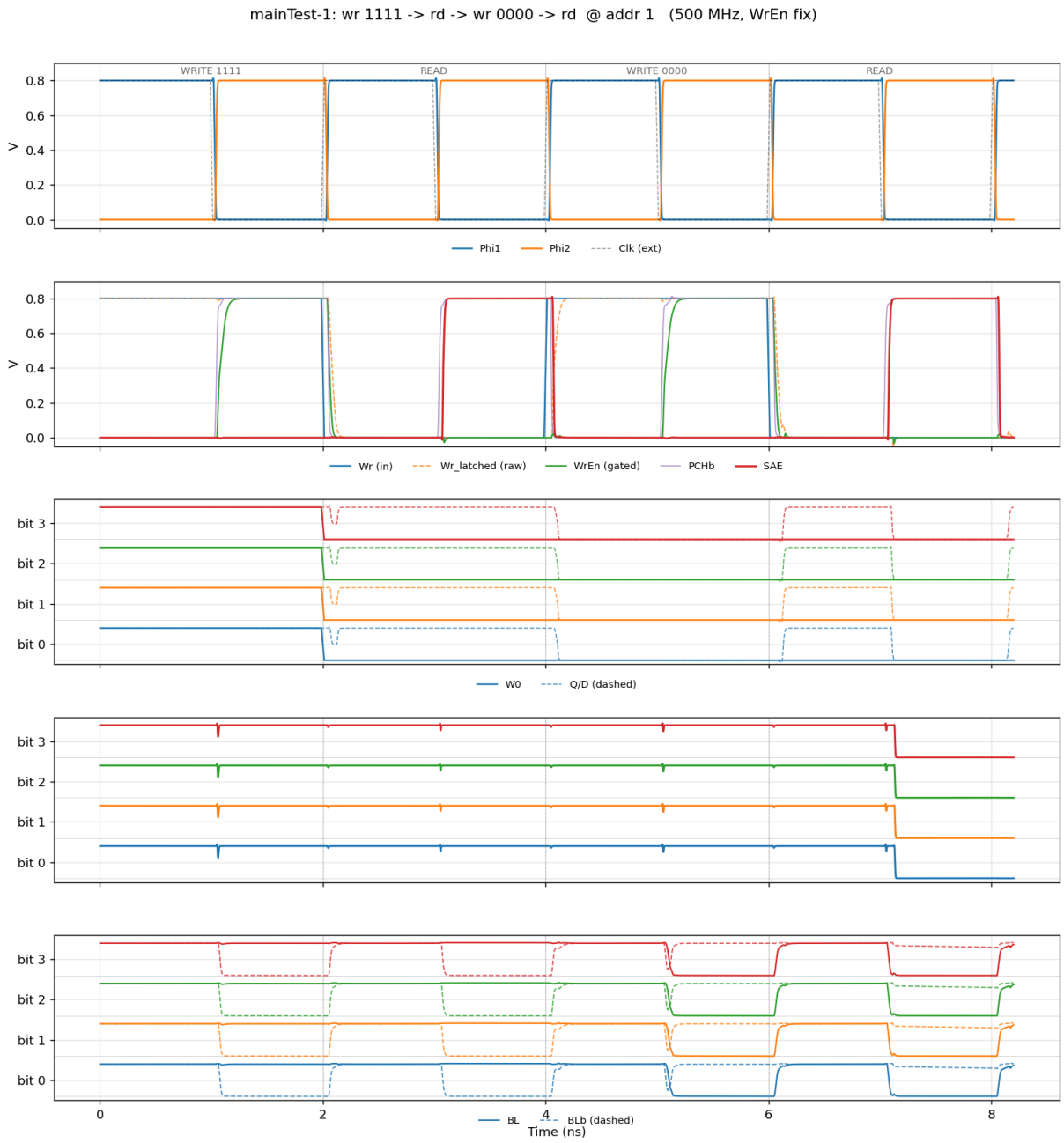

Figure 11: `mainTest1` – full SRAM stimulus exercising write 1, read 1, write 0, read 0 at a single address across four cycles. All four read outputs match the previously written values.

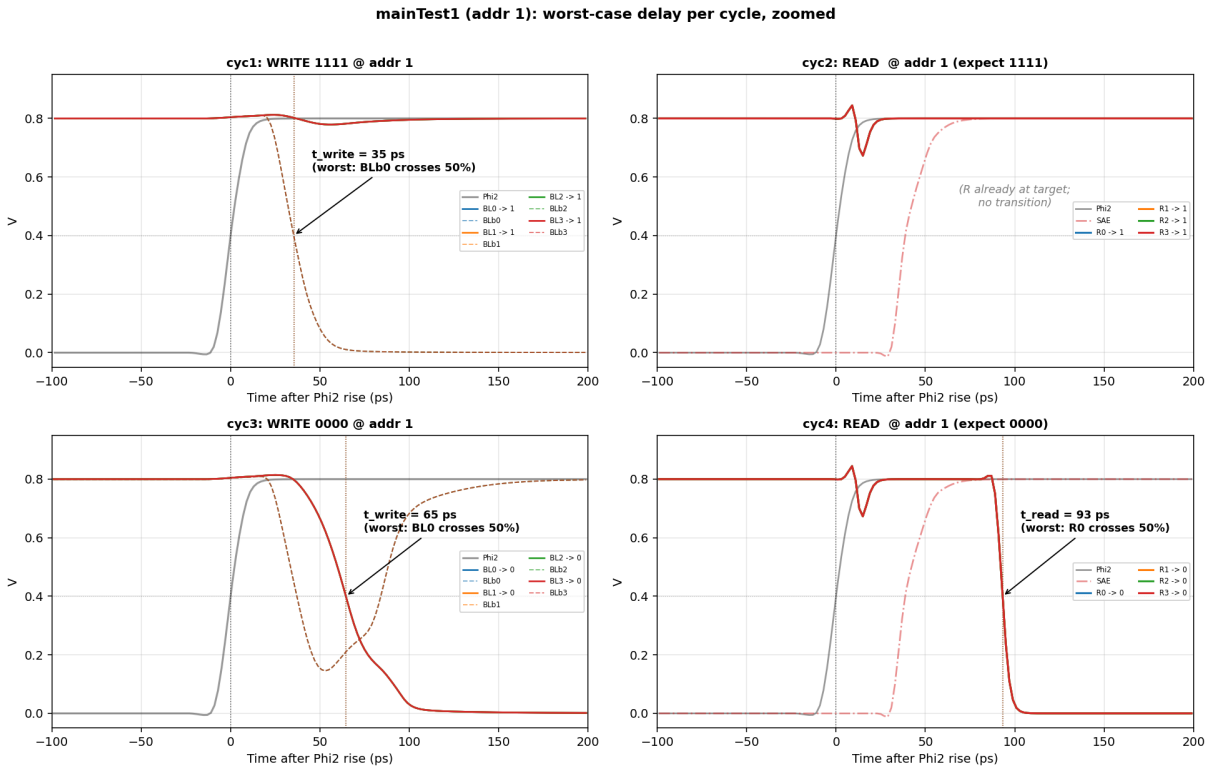

Figure 12: Per-cycle zoom of `mainTest1`. Each cycle shows clean precharge, WL pulse, BL transition, SAE firing, and output resolution.

6.3 Hard-Direction Full-Array Stress (`mainTest2`)

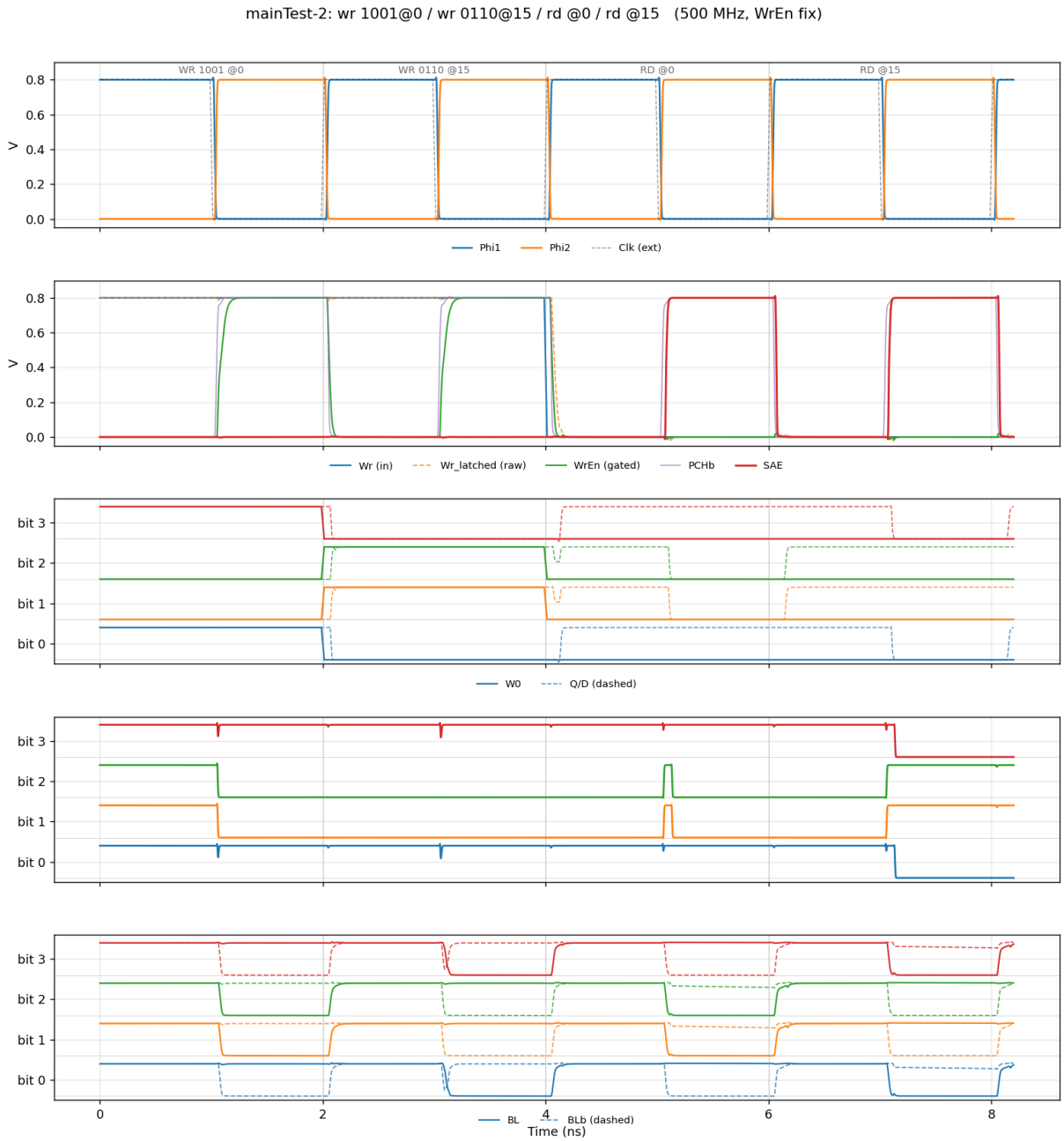

Figure 13: `mainTest2` – fill the entire array with 1s, fill with 0s, then read every location. This is the FOM power workload and also the stress test that sets $T_{\min}$.

6.4 Test-Case Coverage

The test suite exercises the following cases, which together cover every functional pathway of the design:

- **Write/read both polarities at one address** – `mainTest1`; detects any gross write-path or

read-path malfunction.

- **Full-array write-0s / write-1s** – `mainTest2`; stresses the decoder across all 16 rows and confirms the address path.
- **Read-after-write at each address** – implicit in `mainTest2`; the read pass after the all-0s and all-1s writes verifies that the entire array holds the written values.
- **Worst-direction transitions** – write 0 over stored 1 and read 0 after stored 1 are the slowest operations in each category (the SA starts with the precharged-high BL assisting a read 1 but fighting a read 0, and the column driver must pull BL from V_{DD} to ground for a write 0). These are the cycles plotted in Section 5.

7 Performance Characterization

7.1 Minimum Clock Period

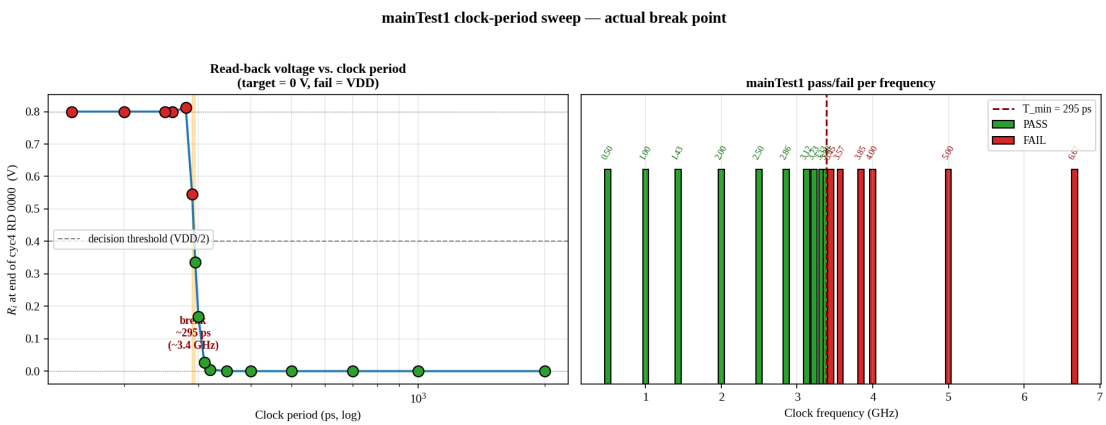

Figure 14: Clock-period sweep on the `mainTest2` workload. $T_{\min} = 298\,\text{ps}$ (296 ps fails, 298 ps passes). The measurement in Section 7.2 uses $T = 320\,\text{ps}$, roughly 7% margin above $T_{\min}$.

The minimum clock period was found by sweeping T downward on the hard `mainTest2` workload until a read failed. Below $T \approx 298\,\text{ps}$ the array begins to return incorrect data; at $T = 298\,\text{ps}$ every read passes. The maximum operating frequency is therefore

$$f_{\max} = \frac{1}{T_{\min}} = \frac{1}{298\,\text{ps}} \approx 3.36\,\text{GHz},$$

well above the project's 500 MHz minimum.

At $T_{\min}$ the read path still completes in approximately 91.7 ps, so the failure boundary is set by the *write* path (word-line pulse width and cross-coupled cell flip margin), not by sense-amp resolution. Adding margin on the write side would close this gap further.

7.2 Power Measurement

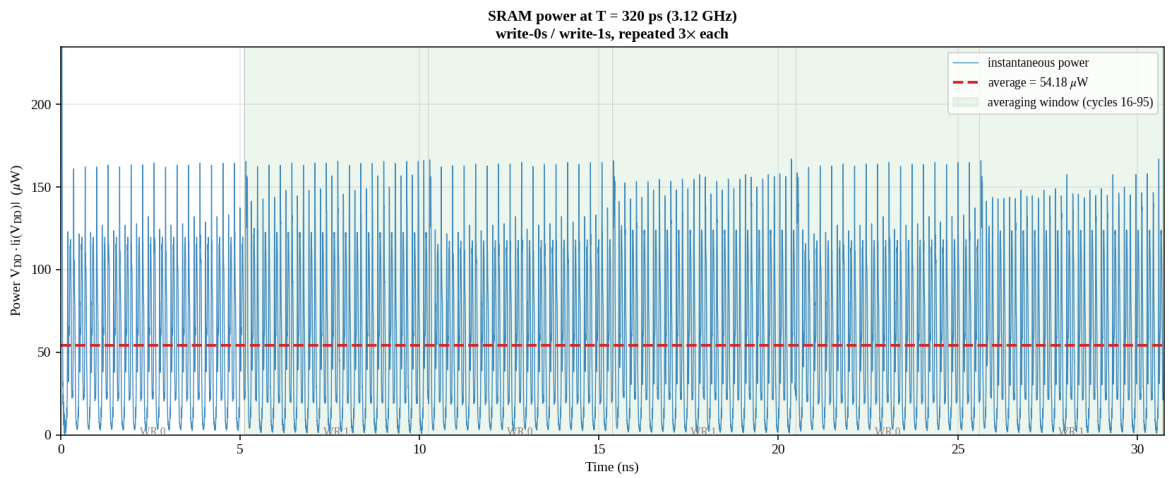

Figure 15: Average supply current at $T = 320\,\text{ps}$ during the FOM workload – four repetitions of (write all-0s, write all-1s). Averaging over cycles 16–95 excludes initial transient and gives $P = 54.18\,\mu\text{W}$.

Per the project specification, average power is measured while repeatedly writing all-0s and then all-1s to the entire array, with the clock set to a period just above T_{min}. We use $T = 320\,\text{ps}$ ($3.125\,\text{GHz}$), which provides $\sim 7\%$ margin over T_{min} and aligns with a clean point on the period sweep grid. Averaging the supply current over cycles 16–95 (excluding the initial settling transient) gives

$$P = 54.18\,\mu\text{W}.$$

7.3 Figure of Merit

With the measured inputs

$$\text{BitcellArea} = 0.308\,\mu\text{m}, \qquad P = 54.18\,\mu\text{W}, \qquad D = 91.9\,\text{ps},$$

the FOM evaluates to

$$\begin{aligned}\text{FOM} &= 60 \cdot 0.308\,\mu\text{m} \cdot 54.18\,\mu\text{W} \cdot (91.9\,\text{ps})^2 \\ &= 60 \cdot 0.308 \cdot 54.18 \cdot 8445.61\ \mu\text{m} \cdot \mu\text{W} \cdot \text{ps}^2 \\ &\approx \mathbf{8.46 \times 10^6}\ \mu\text{m} \cdot \mu\text{W} \cdot \text{ps}^{\mathbf{2}}.\end{aligned}$$

7.4 Summary of Metrics

Table 4: Summary of design metrics.

Metric	Value
Technology	22 nm PTM HP
Supply voltage V_{DD}	0.8 V
Array size	16×4
Bitcell sizing (PD : AX : PU)	88 : 44 : 22 nm (4 : 2 : 1)
BitcellArea (sum of widths)	0.308 μm
Minimum clock period $T_{\min}$	298 ps
Maximum clock frequency	3.36 GHz
Measurement period T	320 ps (3.125 GHz)
Worst-case read access time	91.9 ps
Worst-case write access time	90.5 ps
Reported delay D	91.9 ps
Average power P	54.18 μW
FOM	$\mathbf{8.46 \times 10^6}$ $\mu\text{m} \cdot \mu\text{W} \cdot \text{ps}^{\mathbf{2}}$

8 Conclusion

The 16×4 SRAM meets all functional and performance targets. The two largest design decisions – the two-phase clocking scheme with `PCHb` $= \overline{\phi_1}$, and the isolated latch-type sense amplifier gated by a ϕ_2-derived SAE – together ensure a clean separation between precharge and access phases and enable reliable sense-amp resolution on a controlled bitline differential. The remaining margin at $T_{\min}$ is spent on the write path, which is the most promising target for further optimization.

References

References

[1] *Latch-type sense amplifier,* ResearchGate, figure 4. `https://www.researchgate.net/figure/Latch-type-sense-amplifier_fig4_2977800`

I, Lucas Krippendorff, certify that I have complied with the University of Pennsylvania's Code of Academic Integrity in completing this project.