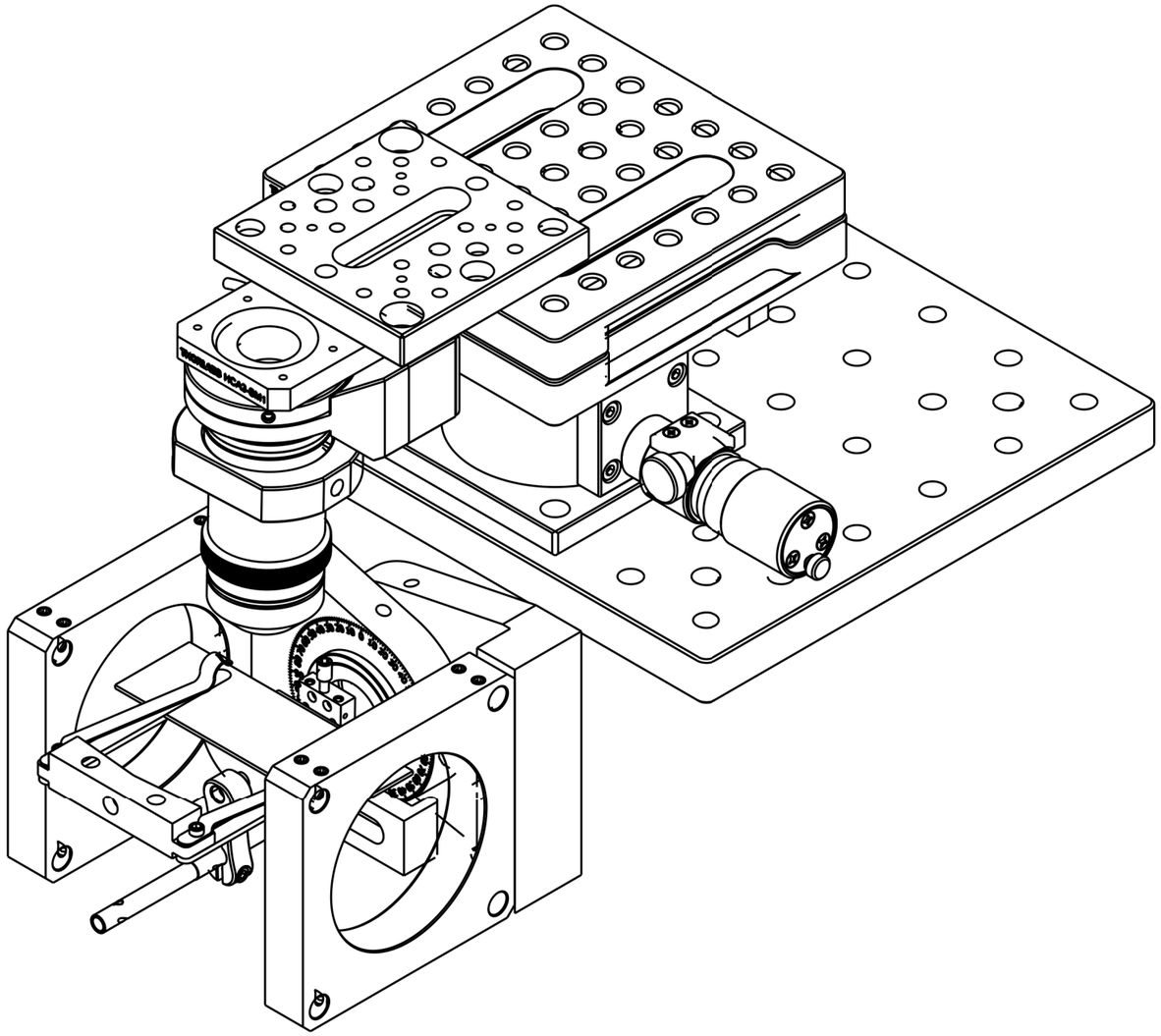

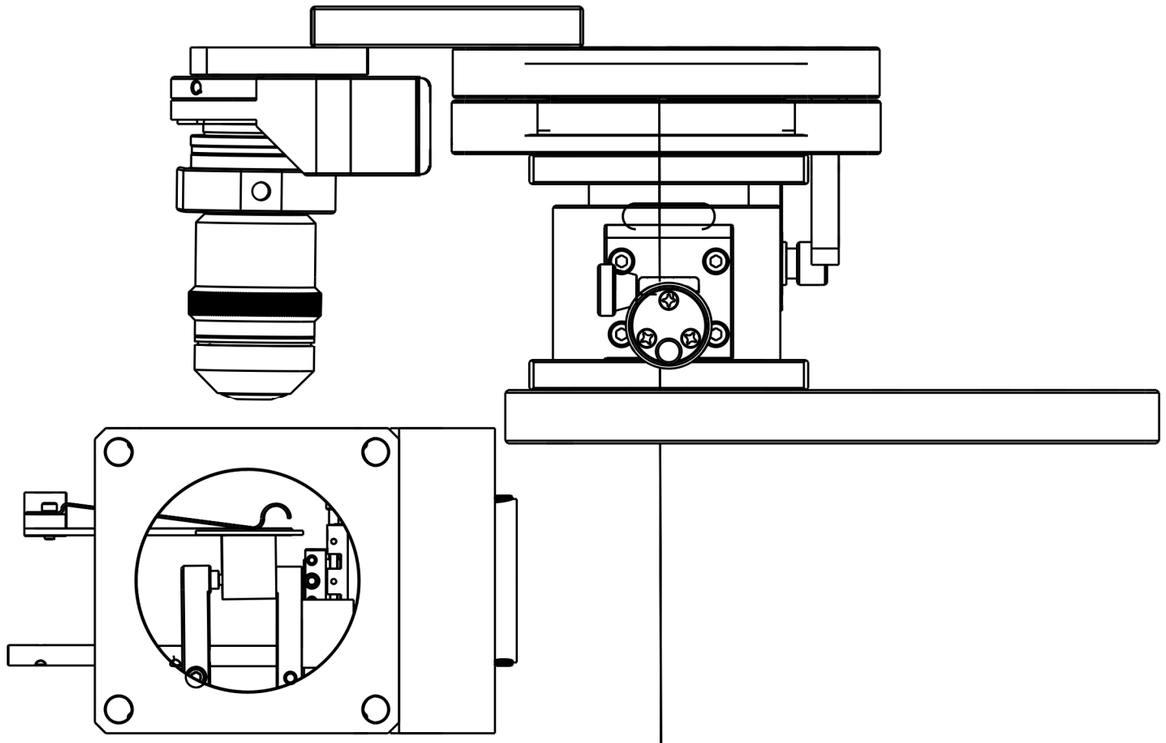

DESIGNED BY: AUTHOR NAME DATE: CREATION DATE		TITLE SUBTITLE		
CHECKED BY: SUPERVISOR NAME DATE: CHECK DATE				
SIZE A3				
SCALE SCALE	WEIGHT (kg) WEIGHT	DRAWING NUMBER NUMBER		SHEET SHEET

This drawing is our property; it can't be reproduced or communicated without our written agreement.

I	_
H	_
G	_
F	_
E	_
D	_
C	_
B	_
A	_