HD74LS164

8-Bit Parallel-Out Serial-in Shift Register

REJ03D0448–0200
Rev.2.00
Feb.18.2005

This 8-bit shift register features gated serial inputs and an asynchronous clear. The gated serial inputs (A and B) permit complete control over incoming data as a low at either (or both) input(s) inhibits entry of the new data and resets the first flip-flop to the low level at the next clock pulse. A high-level input enables the other input which will them determine the state of the first flip-flop. Data at the serial inputs may be changed while the clock is high or low, but only information meeting the setup requirements will be entered. Clocking occurs on the low-to-high-level transition of the clock input.

Features

- Ordering Information

Part Name	Package Type	Package Code (Previous Code)	Package Abbreviation	Taping Abbreviation (Quantity)
HD74LS164P	DILP-14 pin	PRDP0014AB-B (DP-14AV)	P	—
HD74LS164FPEL	SOP-14 pin (JEITA)	PRSP0014DF-B (FP-14DAV)	FP	EL (2,000 pcs/reel)
HD74LS164RPEL	SOP-14 pin (JEDEC)	PRSP0014DE-A (FP-14DNV)	RP	EL (2,500 pcs/reel)

Note: Please consult the sales office for the above package availability.

Pin Arrangement

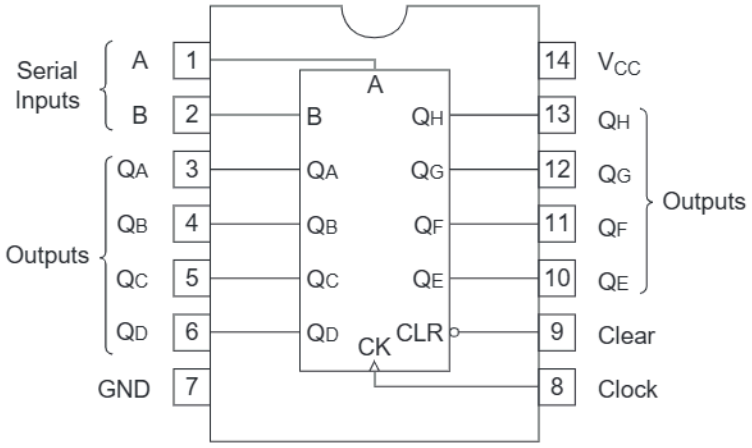

(Top view)

Function Table

Inputs				Outputs		
Clear	Clock	A	B	Q_A	Q_B.....Q_H	
L	X	X	X	L	L	L
H	L	X	X	Q_{A0}	Q_{B0}	Q_{H0}
H	↑	H	H	H	Q_{An}	Q_{Gn}
H	↑	L	X	L	Q_{An}	Q_{Gn}
H	↑	X	L	L	Q_{An}	Q_{Gn}

Notes: 1. H; high level, L; low level, X; irrelevant
2. ↑; transition from low to high level
3. Q_{A0}, Q_{B0}, Q_{H0}; the level of Q_A, Q_B, or Q_H, respectively, before the indicated steady-state input conditions were established.
4. Q_{An}, Q_{Gn}; the level of Q_A or Q_G before the most-recent ↑ transition of the clock; indicates a one-bit shift.

Block Diagram

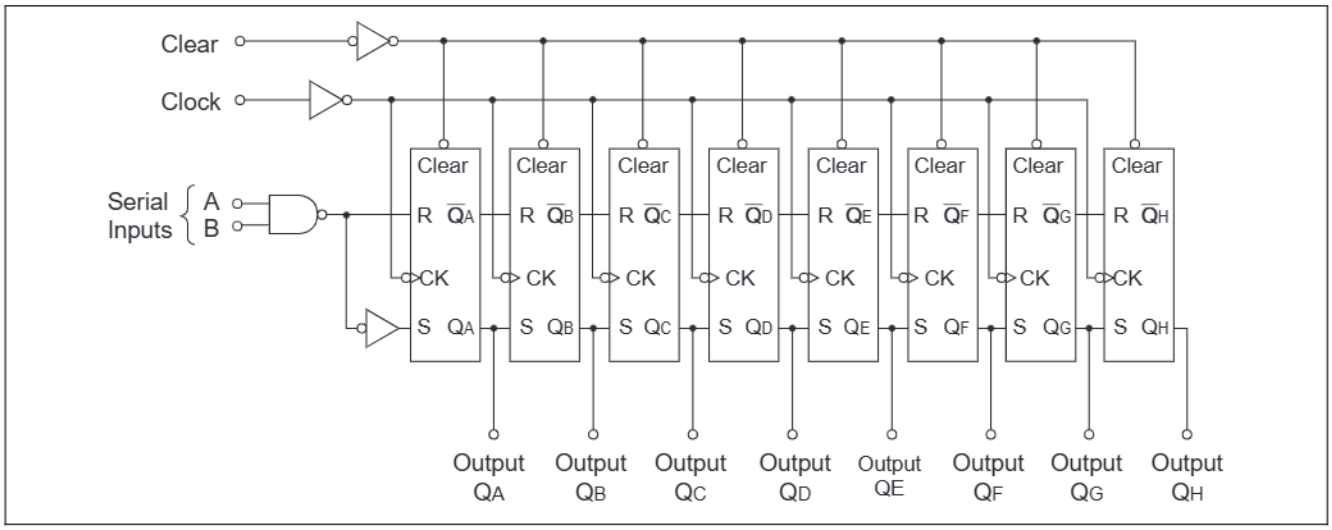

Absolute Maximum Ratings

Item	Symbol	Ratings	Unit
Supply voltage	V_{CC}	7	V
Input voltage	V_{IN}	7	V
Power dissipation	P_T	400	mW
Storage temperature	Tstg	–65 to +150	°C

Note: Voltage value, unless otherwise noted, are with respect to network ground terminal.

Recommended Operating Conditions

Item	Symbol	Min	Typ	Max	Unit
Supply voltage	V_{CC}	4.75	5.00	5.25	V
Output current	I_{OH}	—	—	–400	∝A
	I_{OL}	—	—	8	mA
Operating temperature	T_{opr}	–20	25	75	°C
Clock frequency	f_{clock}	0	—	25	MHz
Clock pulse width	$t_{w\,(CK)}$	20	—	—	ns
Clear pulse width	$t_{w\,(CLR)}$	20	—	—	ns
Data setup time	t_{su}	15	—	—	ns
Data hold time	t_h	5	—	—	ns

Electrical Characteristics

(Ta = –20 to +75 °C)

Item	Symbol	min.	typ.*	max.	Unit	Condition
Input voltage	V_{IH}	2.0	—	—	V	
	V_{IL}	—	—	0.8	V	
Output voltage	V_{OH}	2.7	—	—	V	V_{CC} = 4.75 V, V_{IH} = 2 V, V_{IL} = 0.8 V, I_{OH} = –400 ∝A
	V_{OL}	—	—	0.4	V	I_{OL} = 4 mA; V_{CC} = 4.75 V, V_{IH} = 2 V, V_{IL} = 0.8 V
		—	—	0.5		I_{OL} = 8 mA
Input current	I_{IH}	—	—	20	∝A	V_{CC} = 5.25 V, V_I = 2.7 V
	I_{IL}	—	—	–0.4	mA	V_{CC} = 5.25 V, V_I = 0.4 V
	I_I	—	—	0.1	mA	V_{CC} = 5.25 V, V_I = 7 V
Short-circuit output current	I_{OS}	–20	—	–100	mA	V_{CC} = 5.25 V
Supply current**	I_{CC}	—	16	27	mA	V_{CC} = 5.25 V
Input clamp voltage	V_{IK}	—	—	–1.5	V	V_{CC} = 4.75 V, I_{IN} = –18 mA

Notes: * V_{CC} = 5 V, Ta = 25°C

** I_{CC} is measured with outputs open, serial inputs grounded, the clock input at 2.4 V, and a momentary grounded, then 4.5 V applied to clear.

Switching Characteristics

(V_{CC} = 5 V, Ta = 25°C)

Item	Symbol	Inputs	Outputs	min.	typ.	max.	Unit	Condition
Maximum clock frequency	f_{max}			25	36	—	MHz	C_L = 15 pF, R_L = 2 kΩ
Propagation delay time	t_{PHL}	Clear	Q	—	24	36	ns	
	t_{PLH}	Clock	Q	—	17	27	ns	
	t_{PHL}	Clock	Q	—	21	32	ns	

RENESAS

Typical Clear, Shift, and Clear Sequences

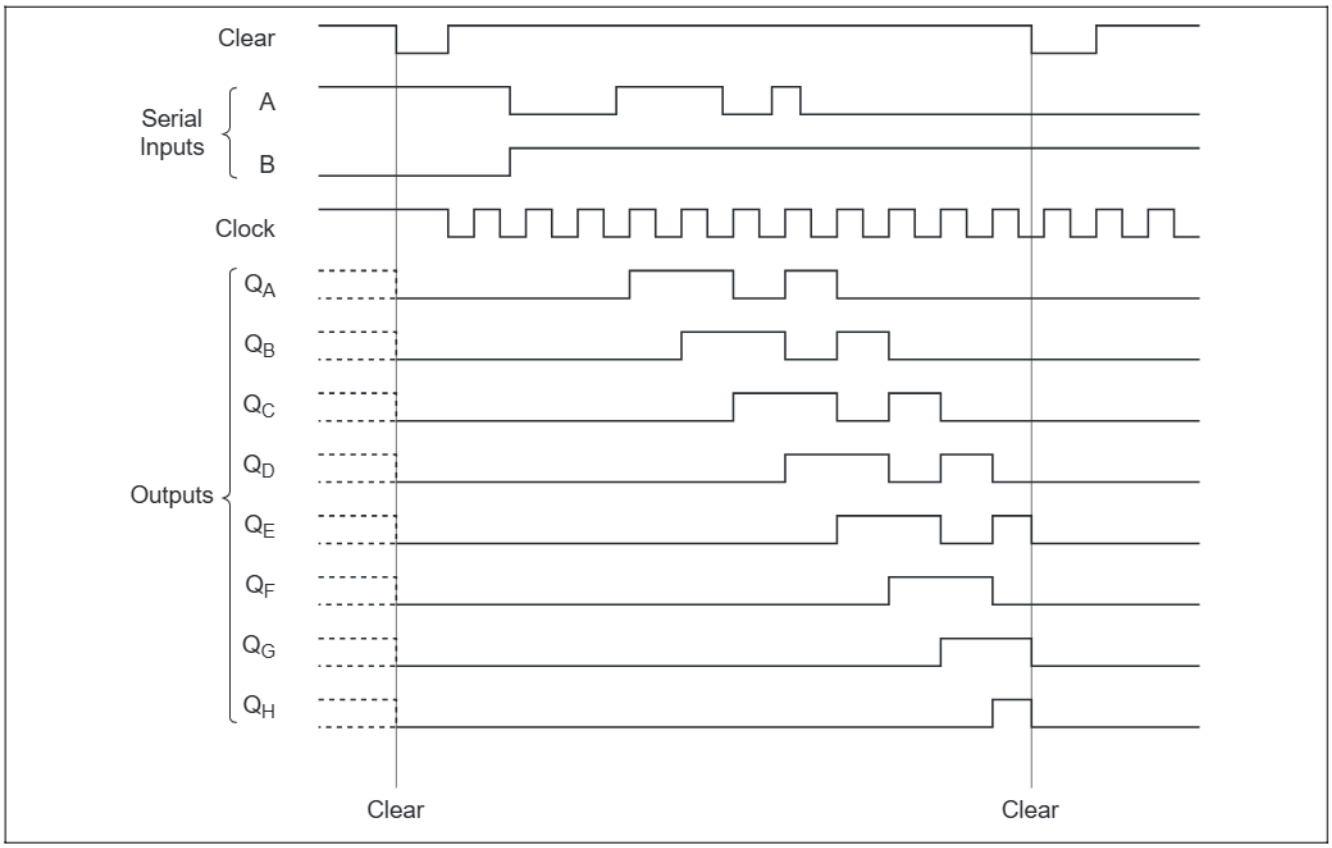

Testing Method

Test Circuit

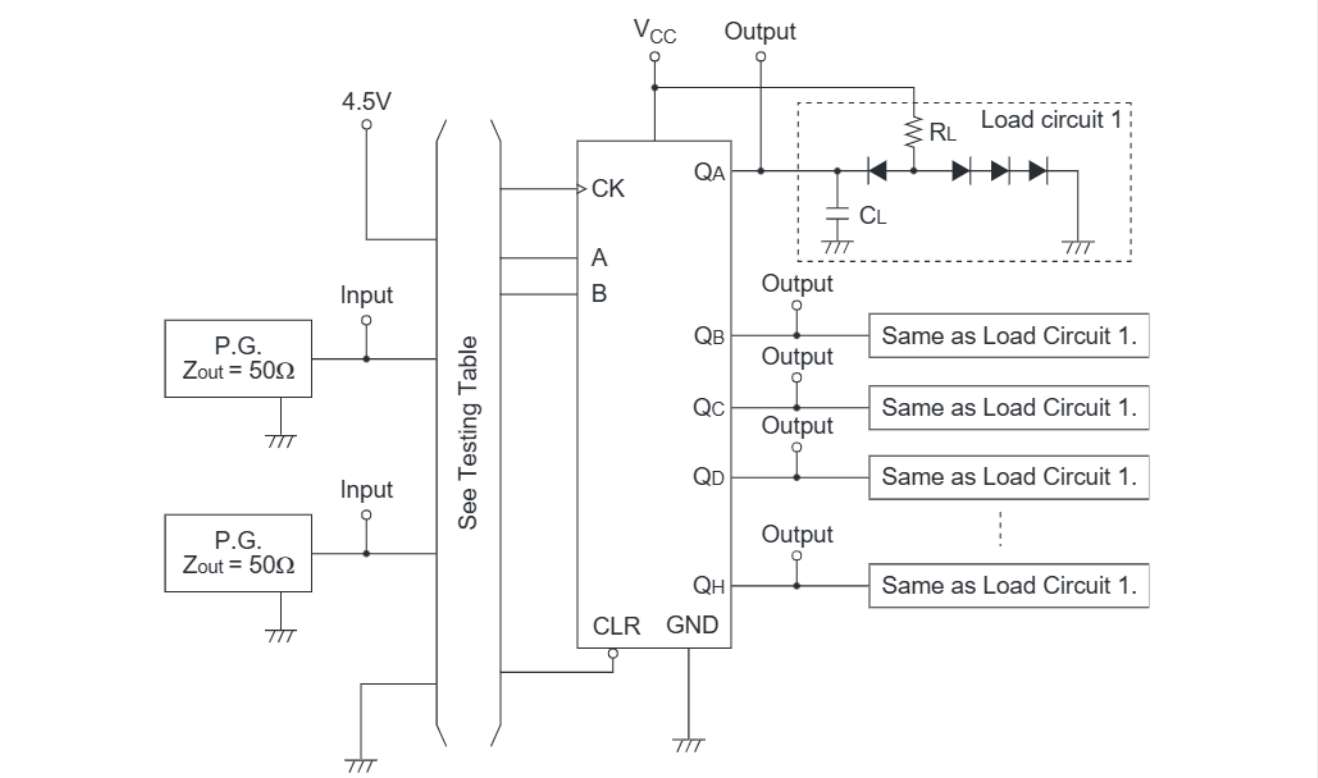

Notes: 1. C_L includes probe and jig capacitance.
2. All diodes are 1S2074(H).

Testing Table

Item	From input to output	Inputs				Outputs							
		CLR	CK	A	B	Q_A	Q_B	Q_C	Q_D	Q_E	Q_F	Q_G	Q_H
f_{max}		4.5V	IN	IN	4.5V	OUT	OUT	OUT	OUT	OUT	OUT	OUT	OUT
t_{PLH}	Clear→Q	IN	IN	IN	4.5V	OUT	OUT	OUT	OUT	OUT	OUT	OUT	OUT
t_{PHL}	CK→Q	4.5V	IN	IN	4.5V	OUT	OUT	OUT	OUT	OUT	OUT	OUT	OUT

Waveform

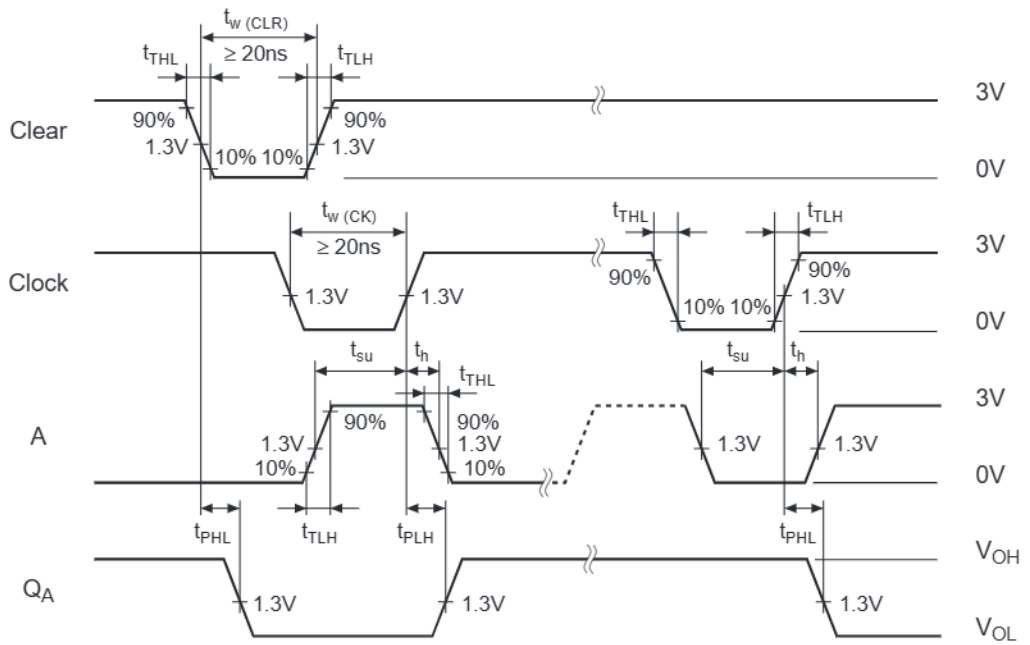

Notes:
1. Input pulse; $t_{TLH} \leq 15$ ns, $t_{THL} \leq 6$ ns, PRR = 1 MHz, (Clock, Clear), PRR = 500 kHz (A or B)
2. Q_A output is illustrated. Relationship of serial input A and B data to other Q outputs is illustrated in the timing chart.

Package Dimensions

JEITA Package Code	RENESAS Code	Previous Code	MASS[Typ.]
P-DIP14-6.3x19.2-2.54	PRDP0014AB-B	DP-14AV	0.97g

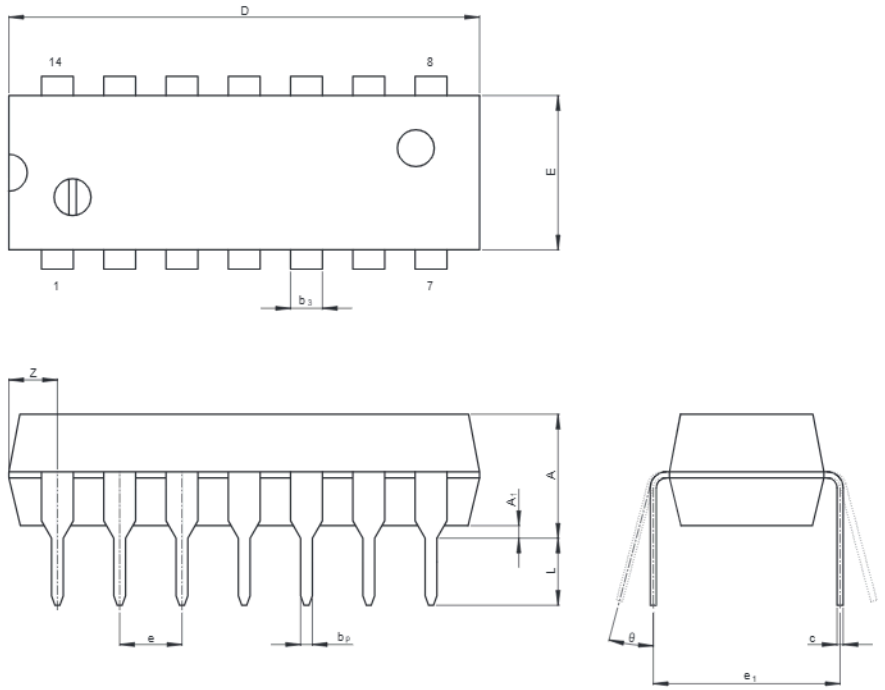

(Ni/Pd/Au plating)

Reference Symbol	Dimension in Millimeters		
	Min	Nom	Max
e_1	—	7.62	—
D	—	19.2	20.32
E	—	6.3	7.4
A	—	—	5.06
A_1	0.51	—	—
b_p	0.40	0.48	0.56
b_3	—	1.30	—
c	0.19	0.25	0.31
θ	0°	—	15°
e	2.29	2.54	2.79
Z	—	—	2.39
L	2.54	—	—

JEITA Package Code	RENESAS Code	Previous Code	MASS[Typ.]
P-SOP14-5.5x10.06-1.27	PRSP0014DF-B	FP-14DAV	0.23g

NOTE)
1. DIMENSIONS"*1 (Nom)"AND"*2" DO NOT INCLUDE MOLD FLASH.
2. DIMENSION"*3"DOES NOT INCLUDE TRIM OFFSET.

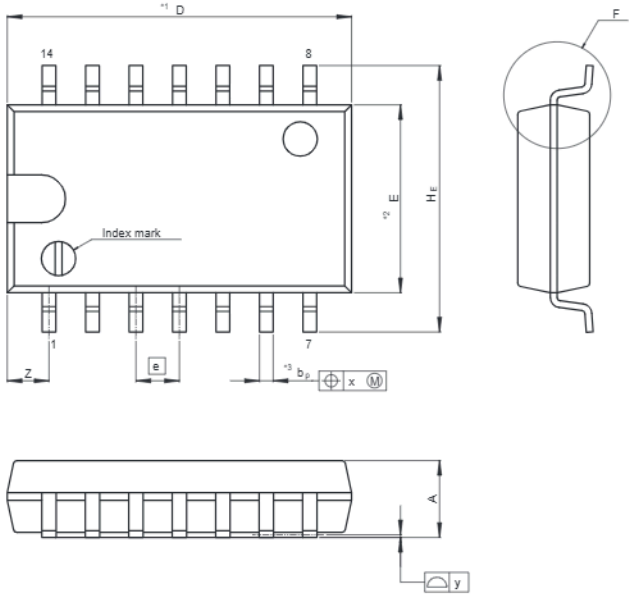

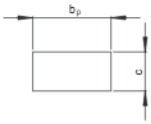

Terminal cross section
(Ni/Pd/Au plating)

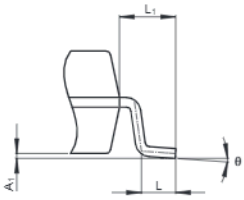

Detail F

Reference Symbol	Dimension in Millimeters		
	Min	Nom	Max
D	—	10.06	10.5
E	—	5.50	—
A_2	—	—	—
A_1	0.00	0.10	0.20
A	—	—	2.20
b_p	0.34	0.40	0.46
b_1	—	—	—
c	0.15	0.20	0.25
c_1	—	—	—
θ	0°	—	8°
H_E	7.50	7.80	8.00
e	—	1.27	—
x	—	—	0.12
y	—	—	0.15
Z	—	—	1.42
L	0.50	0.70	0.90
L_1	—	1.15	—

JEITA Package Code	RENESAS Code	Previous Code	MASS[Typ.]
P-SOP14-3.95x8.65-1.27	PRSP0014DE-A	FP-14DNV	0.13g

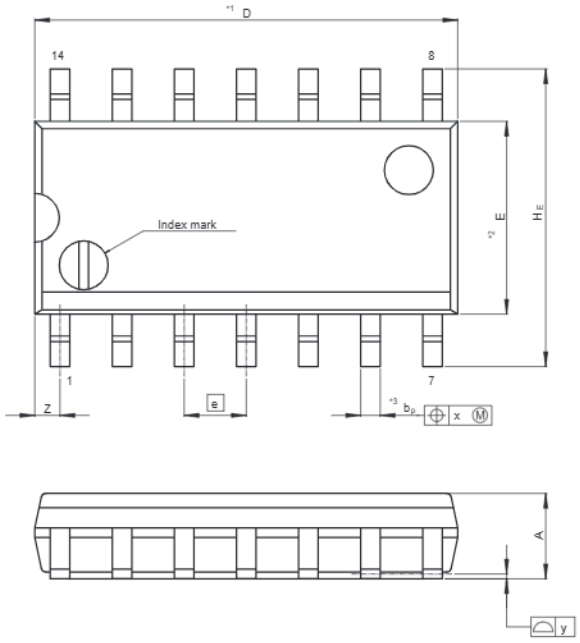

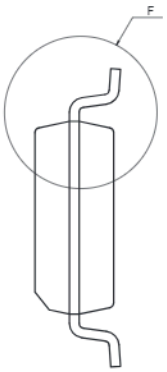

NOTE)
1. DIMENSIONS"*1 (Nom)"AND"*2" DO NOT INCLUDE MOLD FLASH.
2. DIMENSION"*3"DOES NOT INCLUDE TRIM OFFSET.

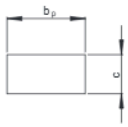

Terminal cross section
(Ni/Pd/Au plating)

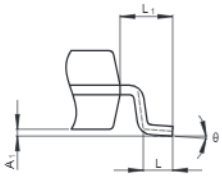

Detail F

Reference Symbol	Dimension in Millimeters		
	Min	Nom	Max
D	—	8.65	9.05
E	—	3.95	—
A_2	—	—	—
A_1	0.10	0.14	0.25
A	—	—	1.75
b_p	0.34	0.40	0.46
b_1	—	—	—
c	0.15	0.20	0.25
c_1	—	—	—
θ	0°	—	8°
H_E	5.80	6.10	6.20
e	—	1.27	—
x	—	—	0.25
y	—	—	0.15
Z	—	—	0.635
L	0.40	0.60	1.27
L_1	—	1.08	—

Renesas Technology Corp. Sales Strategic Planning Div. Nippon Bldg., 2-6-2, Ohte-machi, Chiyoda-ku, Tokyo 100-0004, Japan

Keep safety first in your circuit designs!

1. Renesas Technology Corp. puts the maximum effort into making semiconductor products better and more reliable, but there is always the possibility that trouble may occur with them. Trouble with semiconductors may lead to personal injury, fire or property damage.
   Remember to give due consideration to safety when making your circuit designs, with appropriate measures such as (i) placement of substitutive, auxiliary circuits, (ii) use of nonflammable material or (iii) prevention against any malfunction or mishap.

Notes regarding these materials

1. These materials are intended as a reference to assist our customers in the selection of the Renesas Technology Corp. product best suited to the customer's application; they do not convey any license under any intellectual property rights, or any other rights, belonging to Renesas Technology Corp. or a third party.
2. Renesas Technology Corp. assumes no responsibility for any damage, or infringement of any third-party's rights, originating in the use of any product data, diagrams, charts, programs, algorithms, or circuit application examples contained in these materials.
3. All information contained in these materials, including product data, diagrams, charts, programs and algorithms represents information on products at the time of publication of these materials, and are subject to change by Renesas Technology Corp. without notice due to product improvements or other reasons. It is therefore recommended that customers contact Renesas Technology Corp. or an authorized Renesas Technology Corp. product distributor for the latest product information before purchasing a product listed herein.
   The information described here may contain technical inaccuracies or typographical errors.
   Renesas Technology Corp. assumes no responsibility for any damage, liability, or other loss rising from these inaccuracies or errors.
   Please also pay attention to information published by Renesas Technology Corp. by various means, including the Renesas Technology Corp. Semiconductor home page (http://www.renesas.com).
4. When using any or all of the information contained in these materials, including product data, diagrams, charts, programs, and algorithms, please be sure to evaluate all information as a total system before making a final decision on the applicability of the information and products. Renesas Technology Corp. assumes no responsibility for any damage, liability or other loss resulting from the information contained herein.
5. Renesas Technology Corp. semiconductors are not designed or manufactured for use in a device or system that is used under circumstances in which human life is potentially at stake. Please contact Renesas Technology Corp. or an authorized Renesas Technology Corp. product distributor when considering the use of a product contained herein for any specific purposes, such as apparatus or systems for transportation, vehicular, medical, aerospace, nuclear, or undersea repeater use.
6. The prior written approval of Renesas Technology Corp. is necessary to reprint or reproduce in whole or in part these materials.
7. If these products or technologies are subject to the Japanese export control restrictions, they must be exported under a license from the Japanese government and cannot be imported into a country other than the approved destination.
   Any diversion or reexport contrary to the export control laws and regulations of Japan and/or the country of destination is prohibited.
8. Please contact Renesas Technology Corp. for further details on these materials or the products contained therein.

RENESAS SALES OFFICES

http://www.renesas.com

Refer to "**http://www.renesas.com/en/network**" for the latest and detailed information.

Renesas Technology America, Inc.
450 Holger Way, San Jose, CA 95134-1368, U.S.A
Tel: <1> (408) 382-7500, Fax: <1> (408) 382-7501

Renesas Technology Europe Limited
Dukes Meadow, Millboard Road, Bourne End, Buckinghamshire, SL8 5FH, U.K.
Tel: <44> (1628) 585-100, Fax: <44> (1628) 585-900

Renesas Technology Hong Kong Ltd.
7th Floor, North Tower, World Finance Centre, Harbour City, 1 Canton Road, Tsimshatsui, Kowloon, Hong Kong
Tel: <852> 2265-6688, Fax: <852> 2730-6071

Renesas Technology Taiwan Co., Ltd.
10th Floor, No.99, Fushing North Road, Taipei, Taiwan
Tel: <886> (2) 2715-2888, Fax: <886> (2) 2713-2999

Renesas Technology (Shanghai) Co., Ltd.
Unit2607 Ruijing Building, No.205 Maoming Road (S), Shanghai 200020, China
Tel: <86> (21) 6472-1001, Fax: <86> (21) 6415-2952

Renesas Technology Singapore Pte. Ltd.
1 Harbour Front Avenue, #06-10, Keppel Bay Tower, Singapore 098632
Tel: <65> 6213-0200, Fax: <65> 6278-8001

© 2005. Renesas Technology Corp., All rights reserved. Printed in Japan.

Colophon .2.0