DO NOT SCALE

DIMENSIONS IN MM UNLESS OTHERWISE STATED

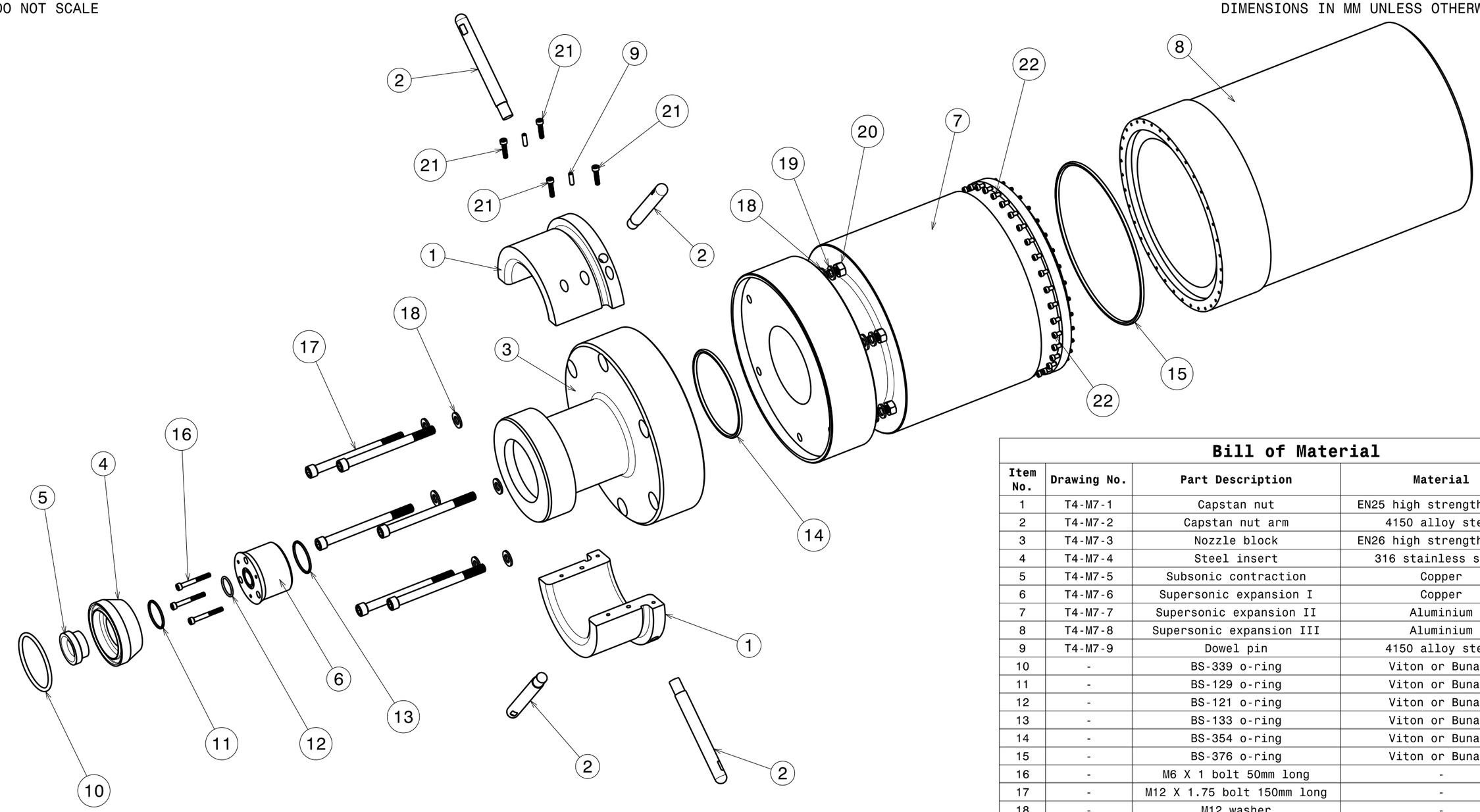

Bill of Material

Item No.	Drawing No.	Part Description	Material	Qty.
1	T4-M7-1	Capstan nut	EN25 high strength steel	1
2	T4-M7-2	Capstan nut arm	4150 alloy steel	4
3	T4-M7-3	Nozzle block	EN26 high strength steel	1
4	T4-M7-4	Steel insert	316 stainless steel	1
5	T4-M7-5	Subsonic contraction	Copper	1
6	T4-M7-6	Supersonic expansion I	Copper	1
7	T4-M7-7	Supersonic expansion II	Aluminium	1
8	T4-M7-8	Supersonic expansion III	Aluminium	1
9	T4-M7-9	Dowel pin	4150 alloy steel	2
10	-	BS-339 o-ring	Viton or Buna-N	1
11	-	BS-129 o-ring	Viton or Buna-N	1
12	-	BS-121 o-ring	Viton or Buna-N	1
13	-	BS-133 o-ring	Viton or Buna-N	1
14	-	BS-354 o-ring	Viton or Buna-N	1
15	-	BS-376 o-ring	Viton or Buna-N	1
16	-	M6 X 1 bolt 50mm long	-	3
17	-	M12 X 1.75 bolt 150mm long	-	6
18	-	M12 washer	-	12
19	-	M12 split washer	-	6
20	-	M12 X 1.75 nut	-	6
21	-	M6 X 1 bolt 25mm long	-	4
22	-	M5 X 0.8 bolt 30mm long	-	36

NOTES:

TOLERANCING

Angular: ±0.5°
Zero place decimal ±0.1mm
One place decimal ±0.05mm
Two place decimal ±0.01mm
Geometry as per ISO 2768-fH.
Surface finish Ra 3.2

REV	DESCRIPTION	DATE	APR
-	-	-	-
-	-	-	-
-	-	-	-
-	-	-	-

CONTACT Wilson Chan	DESIGNED BY Wilson Y. K. Chan	DATE 17/08/2012
EMAIL y.chan1@uq.edu.au	DRAWN BY Guillaume Cecchini	DATE 22/08/2012
PHONE 0402992071	CHECKED BY Wilson Y. K. Chan	DATE 23/08/2012

THE UNIVERSITY OF QUEENSLAND
AUSTRALIA
CENTRE FOR HYPERSONICS

HiFiRE

MATERIAL As per B.O.M.

MASS XXX

TITLE

Assembly

T4 Mach 7 Nozzle

DRAWING NUMBER T4-M7-10

SCALE 1:6

PROJECTION

SIZE A3

SHEET 1/2