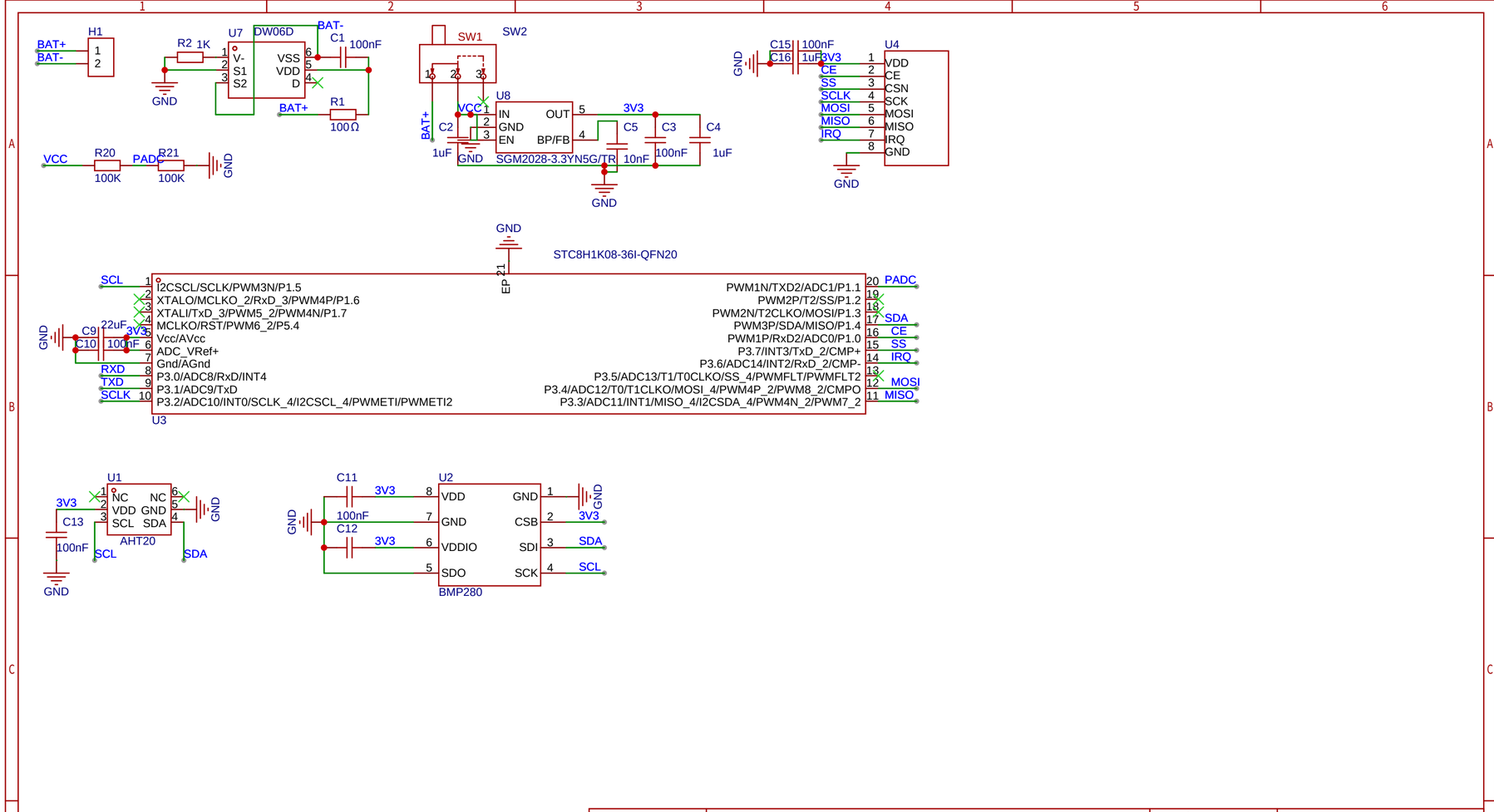

Schematic	Schematic1	Update Date	2023-04-09
		Create Date	2022-08-27
Page	P1	Part Number	
Drawed		洛WeatherStation	
Reviewed			
		VER / SIZE	PAGE 1 OF 1
嘉立创EDA		嘉立创EDA	