REVISIONS (LIST ONLY ALPHABETICAL REVS. PRODUCTION IGNORE NUMERIC REVISIONS.)			
REV.	DESCRIPTION	DATE	ENGR

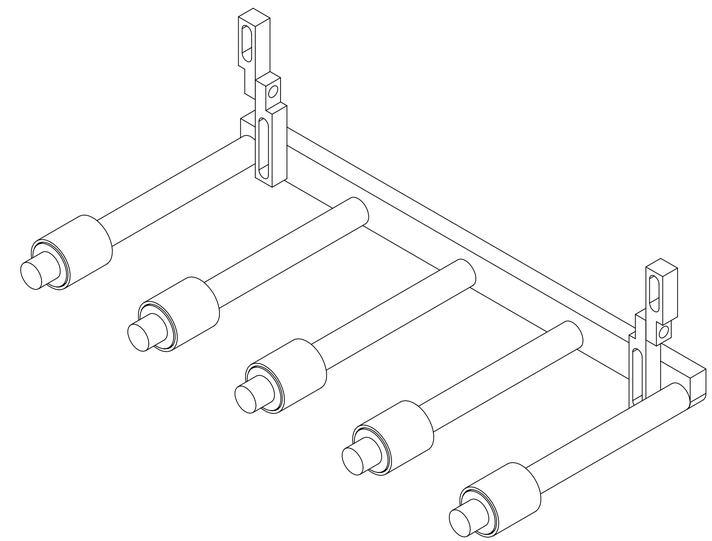

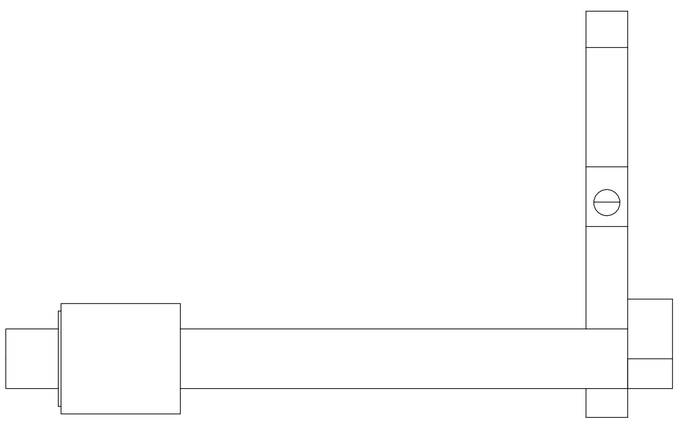

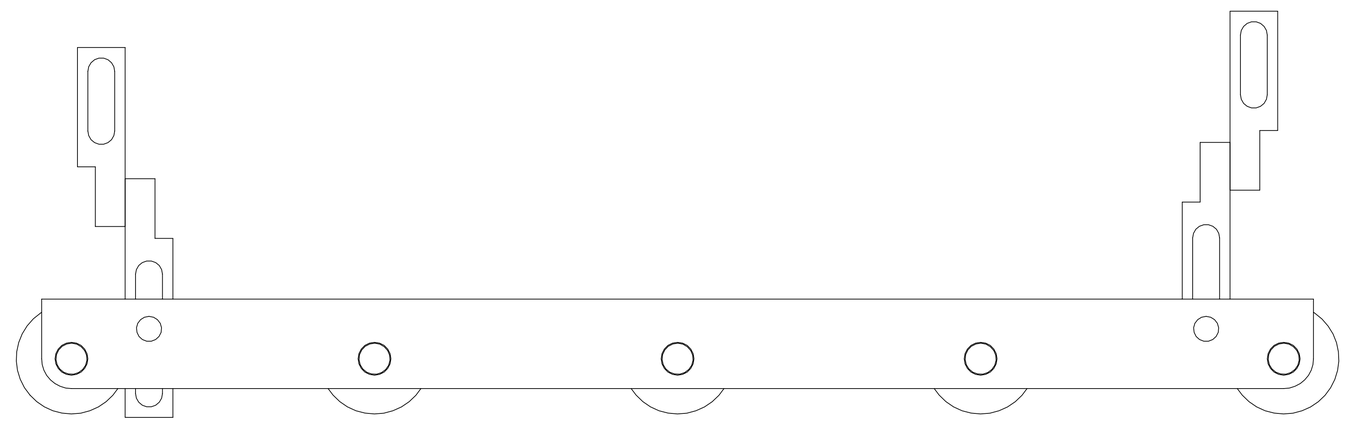

Material: [populates from item specific material]
Coating: [populates from item specific coating]
Heat treat: [x]

ELECTROIMPACT Inc.
4413 Chennault Beach Rd., MUKILTEO, WA 98275
ph (425) 348-8090 fax (425) 348-0716

0.67
LBS

ALL INFORMATION CONTAINED IN THIS DRAWING IS PROPRIETARY TO, AND SHALL BE USED ONLY WITHIN THE PREMISES OF, ELECTROIMPACT INC. NO DISTRIBUTION OR REPRODUCTION WITHOUT PERMISSION OF ELECTROIMPACT INC.
THIS DRAWING IS NOT TO BE SCALED AND IS FOR REFERENCE ONLY.

UNITS: INCHES
TOLERANCE: FINE
X ± 0.060
X.X ± 0.030
X.XX ± 0.010
X.XXX ± 0.005 X°±1
X.XXXX ± 0.002 1/X ±1/32

◄DIMENSION UNITS UNLESS OTHERWISE NOTED

43 √ – THIRD ANGLE PROJECTION

BREAK ALL EDGES .005-.035
MAX FILET RADIUS 0.035

ORIG PROJ NO. [x]
[x]

DRAWN BY: [x]		REVISION: [x]	
APPROVED: KEEN-AVERY	SCALE: 1/2	A.I. KEEN-AVERY	DATE:
[x]	SIZE: D	1-2	SHEET 1 OF 1
DRAWING NO. [x]			SIGNED ENGINEER: [x]